CAL

JULY

1923

Librarian
Uttarpara Jaikrishna Public Library

REGISTERED No. C207. [illegible] 1923.

# The Calcutta Gazette

WEDNESDAY, JULY 4, 1923

CONTENTS


| | Page |
|---|---|
| PART I.—Orders and Notifications by the Governor of Bengal, the Government of Bengal, the High Court, Government Treasury, etc. ... | 863—914 |
| PART IA.—Orders and Notifications by the Government of India ... | 207—212 |
| PART IB.—Educational Notices | 289—737 |
| PART II.—Advertisements | 781—803 |
| PART III.—Acts of the Bengal Legislative Council | Nil |
| PART IV.—Bills introduced in the Bengal Legislative Council, Reports of Select Committees presented or to be presented to that Council, and Bills published before introduction in that Council | Nil |
| PART V.—Acts of the Indian Legislature assented to by the Governor General | Nil |
| PART VI.—Bills introduced in the Council of State and Legislative Assembly, Reports of Select Committees presented to the Council and Assembly, and Bills published under Rule 18 of the Indian Legislative Rules | Nil |
| SUPPLEMENT No. 27— | |
| Circular and Eastern Canals—Daily gauge readings—Weather and Crop Reports—Prices current—Vital statistics—Daily rainfall—Sea level gauge readings—Area based Weekly gauge readings | 799—811 |


## PART I.

***Orders and Notifications by the Governor of Bengal, the Government of Bengal, the High Court, Government Treasury, etc.***

### ORDERS BY HIS EXCELLENCY THE GOVERNOR OF BENGAL.

**Tour Programme of**

**HIS EXCELLENCY THE GOVERNOR OF BENGAL**

**during July 1923.**

| Date and day. | Standard time. | Station | Remarks. |
|---|---|---|---|
| **July.** | HOURS. | | |
| 12th, Thursday ... | 21-51 | Leave Calcutta ... | By special train. |
| 13th, Friday ... | 5-35 | Arrive Goalundo. | |

| Date and day | Standard time | Station | Remarks |
|---|---|---|---|
| July. | HOURS. | | |
| 13th, Friday .. | 7-30 | Leave Goalundo ... | By *Khulna* |
| | 16-0 | Arrive Dacca. | |

NOTE.—(1) The party accompanying His Excellency will be—

Lieutenant-Colonel J. Mackenzie, C.I.E., Military Secretary
Mr. H. R. Wilkinson, I.C.S., Private Secretary
Major E. H. V. Hodge, I.M.S., Surgeon *
Captain S. B. Horn, M.C., Aide-de-Camp.
Captain G. B. Fyldes, M.C., Aide-de-Camp
Captain D. W. M. Prinsep, Extra Aide-de-Camp

(2) Letters and telegrams for the party should be addressed to the Governor's Camp, Bengal, *without the addition of the name of any post town*

(3) All arrivals and departures will be private

* Will arrive from Darjeeling
*N.B.*—The time of arrival at Dacca is approximate

J. MACKENZIE, LIEUT.-COLONEL,
*Military Secretary to H. E. the Governor of Bengal*

GOVERNMENT HOUSE, CALCUTTA, *the 29th June 1923*

## ORDERS BY THE GOVERNMENT OF BENGAL.

No. 6611A.

### APPOINTMENTS AND TRANSFERS.

GENERAL.—*No. 6212A.—The 23rd June 1923.*—The Sub-Deputy Collectors, on leave, named below, are posted to the divisions mentioned opposite their names:—

| | | |
|---|---|---|
| Maulvi Shaikh Abdullah (No. II) | .. | Presidency Division |
| Babu Radhika Mohan Basak | ... | Rajshahi " |
| Maulvi Muhammad Taherudin | ... | Rajshahi " |
| Babu Akhil Chandra Gangali | . | Dacca " |

*No. 6283A.—The 25th June 1923.*—Mr. C. F. Payne, C.S.I., I.C.S., on leave, is appointed substantively to be a Magistrate and Collector, with effect from the 24th May 1923.

**Mymensingh.** *No. 6381A.—The 27th June 1923.*—Babu Upendra Mohan Basu, Deputy Magistrate and Deputy Collector, Mymensingh, is transferred to the Netrakona subdivision of that district.

**Rangpur.** *No. 6423A.—The 28th June 1923.*—In exercise of the powers conferred by section 14 of the Code of Criminal Procedure, 1898 (Act V of 1898), and in continuation of notification No. 3761A., dated the 28th March 1923, the Governor in Council is pleased to extend the term of appointment of Maulvi Saleh Ahmed as Special Magistrate of Rangpur for a further period of three months.

**Dacca.** *No. 6439A.—The 28th June 1923.*—Babu Jatindra Kumar Mazumdar, Sub-Deputy Collector, on probation, is posted to the Dacca Division on being relieved of his duties as Superintendent of Industries.

### CONFIRMATION.

*No. 6292A.—The 26th June 1923.*—Mr. A. G. R. Henderson, I.C.S., is confirmed in the grade of [illegible] and Sessions Judges, with effect from the 9th May 1923.

## LEAVE.

GENERAL.—*No 1537A D—The 22nd June 1923*—Mr. A W Cook, C I E, I C S, officiating Commissioner of the Burdwan Division, is allowed leave on average pay for eight months (including one month and twenty-nine days on account of privilege leave at his credit), under article 81 (*b*) (*i*) of the Fundamental Rules, with effect from the 24th June 1923

**Burdwan Divn.**

*No 6270A — The 25th June 1923* — In supersession of the orders of the 16th May 1923, Maulvi Sayid Furokh Mirza, Deputy Magistrate and Deputy Collector, on probation, Lalbagh, Murshidabad, is allowed leave on average pay for two months and twenty-eight days (of which one month and twenty-six days are on account of privilege leave at his credit), under article 81 (*b*) (*ii*) of the Fundamental Rules, with effect from the 9th April 1923

**Murshidabad.**

*No 6273 1 —The 25th June 1923* —Babu Surendra Nath Sarkar, Deputy Magistrate and Deputy Collector, Netrakona, Mymensingh, is allowed leave on average pay for three months and eleven days (of which three months and nine days are on account of privilege leave at his credit), under article 81 (*b*) (*ii*) of the Fundamental Rules, with effect from the 4th July 1923, or any subsequent date on which he may avail himself of it

**Mymensingh.**

*No 6277A —The 25th June 1923* —In supersession of the orders of the 11th May 1923, Hon'ble Sushil Kumar Sinha, I C S, Joint-Magistrate and Deputy Collector, Serampore, Hooghly, is allowed leave for nine months and twelve days, with effect from the 16th May 1923, viz, leave on average pay for three months and twenty-six days under article 81 (*b*) (*i*) of the Fundamental Rules and leave on half average pay for the remaining period under article 81 (*d*) of these rules

**Hooghly.**

*No 6403A The 27th June 1923* —Mr Jati Dutt, Deputy Magistrate and Deputy Collector, is allowed leave on average pay for one month, under article 81 (*b*) (*ii*) of the Fundamental Rules, in extension of the leave granted to him under the orders of the 1st May 1923

*No 6425 1 —The 28th June 1923* —Mr S E Stinton, I C S, Second Additional District and Sessions Judge, 24-Parganas, is allowed leave on average pay for one month, under article 81 (*b*) (*i*) of the Fundamental Rules in extension of the leave granted to him under the orders of the 12th May 1923

**24-Parganas.**

*No 6500 1 — The 29th June 1923* — Babu Hari Charan Panarji, Sub-Deputy Collector, Jhargram, Midnapore, is allowed leave on average pay for two months and fifteen days, under article 81 (*b*) (*ii*) of the Fundamental Rules, with effect from the date on which he may avail himself of it.

**Midnapore.**

*No 6586A The 30th June 1923* Mr. J Johnston, I C S, has been granted by the High Commissioner for India an extension of leave on half average pay for sixteen months

POLICE - *No 6581 1 - The 30th June 1923* — Mr J E Armstrong, Deputy Inspector-General of Police, has been granted by the High Commissioner for India an extension of leave on half average pay for seven days

L BIRLEY,

*Chief Secretary to the Government of Bengal*

## POLITICAL DEPARTMENT.

### NOTIFICATION.

*No 5898P The 29th June 1923* — In pursuance of section 98, sub-section (2) of the Auxiliary Force Act, 1920 (XLIX of 1920), and in partial modification of Political Department notification No 3819P, dated the 7th April 1923, the Governor in Council is pleased to appoint Mr J H Landsay, I C S, officiating Commissioner, Presidency Division, to be a member of the Advisory Committee for the Calcutta Military Area, *vice* the Member, Board of Revenue

**Calcutta.**

L BIRLEY,

*Chief Secretary to the Government of Bengal*

## JUDICIAL DEPARTMENT.

No. 6612A.

### POWERS.

*No 6432A.—The 28th June 1923.*—Babu Dhirendra Nath Banarji, Sub-Deputy Magistrate, on probation, Murshidabad, is vested with the powers of a Magistrate of the second class.

Murshidabad.

*No. 6587A.—The 30th June 1923.*—In exercise of the power conferred by sub-section (*1*) of section 565 of the Code of Criminal Procedure, 1898, the Governor in Council is pleased to empower Babu Dhirendra Kumar Ghosh, a Magistrate of the first class, in the district of Bakarganj, to order, at the time of passing sentence of imprisonment on any person referred to in that sub-section, that the residence or change of residence of such person after release shall be notified as provided by the rules made under sub-section (*3*) of the section.

Bakarganj.

*No 6589A.—The 30th June 1923.*—Mr. T. H. Ellis, I.C.S., Joint-Magistrate, Contai, Midnapore, is vested with the power to try summarily the offences mentioned in section 260 of the Code of Criminal Procedure.

Midnapore.

L. BIRLEY,

*Chief Secretary to the Government of Bengal.*

### APPOINTMENTS AND TRANSFERS.

*No 3675J.—The 25th June 1923.*—In exercise of the powers conferred by sections 14 and 15 and the proviso to section 357 of the Code of Criminal Procedure, 1898 (Act V of 1898), the Governor in Council is pleased—

(*a*) to confer upon Khan Bahadur Haji Khondkar Fazlul Huq the powers of a Magistrate of the first class, in the district of Murshidabad, for a period of three years from the date of this notification, in respect to such cases as may be made over to him within the limits of Kandi subdivision of the said district,

Murshidabad.

(*b*) to direct that he shall, in addition to sitting singly, sit as a member of the Kandi bench in the said district, and

(*c*) to direct him to take down evidence in the English language.

Khan Bahadur Haji Khondkar Fazlul Huq is also vested with the powers to try summarily the offences mentioned in section 260 of the Code of Criminal Procedure.

*No. 3677J.—The 25th June 1923.*—In exercise of the powers conferred by sections 14 and 15 of the Code of Criminal Procedure, 1898 (Act V of 1898), the Governor in Council is pleased—

(*a*) to confer upon Babu Birendra Kumar Bose the powers of a Magistrate of the third class, in the district of Midnapore, for a period of three years from the date of this notification, and

Midnapore.

(*b*) to direct him to sit as a member of the Jhargram independent bench in the said district.

*No 3683J.—The 25th June 1923.*—In exercise of the powers conferred by sections 14 and 15 of the Code of Criminal Procedure, 1898 (Act V of 1898), the Governor in Council is pleased—

(*a*) to confer upon Mr. W. Stewart the powers of a Magistrate of the third class, in the district of the 24-Parganas, for a period of three years from the date of this notification, and

24-Parganas.

(*b*) to direct him to sit as a member of the Kamarhati bench in the said district.

*No. 3685J.—The 25th June 1923.*—In exercise of the powers conferred by sections 14 and 15 and the proviso to section 357 of the Code of Criminal Procedure, 1898 (Act V of 1898), the Governor in Council is pleased—

(*a*) to confer upon Babu Kedar Nath Singh the powers of a Magistrate of the third class, in the district of the 24-Parganas, for a period of three years from the date of this notification,

**24-Parganas.**

(*b*) to direct him to sit as a member of the Kamarhati bench, in the said district, and

(*c*) to direct him to take down evidence in the English language.

*No. 3692J.—The 25th June 1923.*—Babu Shashi Kumar Ghosh, munsif of Pirojpur, in the district of Bakarganj, is appointed to act as Subordinate Judge of Birbhum until further orders.

**Bakarganj. Birbhum.**

*No. 3695J.—The 25th June 1923.*—Babu Satyendra Nath Palit, M.A., B.L., is appointed to act as a Munsif in the district of Bakarganj, to be ordinarily stationed at Pirojpur.

**Bakarganj.**

**RESIGNATION.**

*No. 3681J.—The 25th June 1923.*—The Governor in Council is pleased to accept the resignation tendered by Babu Ramji Das Bezoria of his appointment as an Honorary Magistrate of the Sadar bench in the district of Howrah.

**Howrah.**

**POWERS.**

*No. 3698J.—The 26th June 1923.*—In exercise of the powers conferred by section 14 and the proviso to section 357 of the Code of Criminal Procedure, 1898 (Act V of 1898), the Governor in Council is pleased to confer upon Babu Bisweswar Ray, an Honorary Magistrate of the Berhampore Bench, the powers of a Magistrate of the second class, in the district of Murshidabad, for the period during which he has been directed to sit as a member of the said bench—

**Murshidabad.**

(*a*) in respect to cases brought before the said bench, within the limits of the jurisdiction of the said bench, and

(*b*) in respect to such cases as may be made over to him, when sitting singly, within the limits of the Sadar subdivision of the said district, and to direct him to take down evidence in the English language.

*No 3701J.—The 26th June 1923.*—In exercise of the powers conferred by section 14 and the proviso to section 357 of the Code of Criminal Procedure, 1898 (Act V of 1898), the Governor in Council is pleased to confer upon Babu Purna Chandra Roy, an Honorary Magistrate of the Sadar Independent Bench, the powers of a Magistrate of the 2nd class, in the district of Bogra, for the period during which he has been directed to sit as a member of the said Bench—

**Bogra.**

(*a*) in respect to cases brought before the said Bench, within the limits of the jurisdiction of the said Bench, and

(*b*) in respect to such cases as may be made over to him, when sitting singly, within the limits of the Sadar subdivision of the said district, and to direct him to take down evidence in the English language.

H. P. DUVAL,

*Secretary to the Government of Bengal.*

---

NOTIFICATION.

*No 3688J.—The 25th June 1923.*—In exercise of the power conferred by section 73 of the Bengal Village Self-Government Act, 1919 (Bengal Act V of 1919), the Governor in Council is pleased to appoint the following members of the Bohar union board in the Sadar subdivision of the district of Burdwan, to be, during their term of office as such members, Union Bench within the jurisdiction of the said Union Board for the proposes of that section .—

**Burdwan.**

1. Babu Panchu Gopal Mitra.
2. Maulvi Abdul Majid.
3. „ Joadul Huq.
4. Babu Jogendra Nath Sen.

H. P. DUVAL,

*Secretary to the Government of Bengal.*

## LOCAL SELF-GOVERNMENT DEPARTMENT.

### NOTIFICATIONS.

**Minister in charge: The Hon'ble Sir S. N. Banarji, Kt.**

**Rajshahi.**

*No. 1867M.—The 25th June 1923.*—On the recommendation of the Commissioners of the Rampur-Boalia Municipality in the district of Rajshahi, made at a meeting, the Government of Bengal (Ministry of Local Self-Government) are pleased to direct that the municipality be henceforth called the Rajshahi Municipality.

**Minister in charge: The Hon'ble Sir S. N. Banarji, Kt.**

**Dacca.**

*No. 1895L.S.-G.—The 25th June 1923.*—In exercise of the powers conferred by clauses (*a*) and (*b*) of section 31 of the Cattle Trespass Act, 1871 (I of 1871), and in modification of the orders contained in clauses (*a*) and (*b*) of notification No. 317½T.M., dated the 16th August 1913, and in clauses (*a*) and (*b*) of notification No. 1428L S.-G, dated the 18th May 1914, the Government of Bengal (Ministry of Local Self-Government) are pleased to—

(*i*) transfer to the union boards in the district of Dacca named below all the functions of the Magistrate of that district under Chapters II and III of the said Act, I of 1871, in respect of all pounds within the local areas subject, respectively, to the jurisdiction of the said union boards;

(*ii*) direct that the whole of surplus accruing under section 18 of the said Act, I of 1871, in the areas under the jurisdiction of the union boards in the district of Dacca, named below, shall be placed to the credit of the union funds, respectively, constituted for the said union boards—

*Manikganj subdivision.*

Jainpur, Khalsi, Kalia, Ulail, Baratia, Nali, Gala, Chala, Harokandi, Boyra, Ramkrishnapur, Lesraganj, Latakhola, Sutalori, Betila-Mitura, Putail, Dighi, Atigram, Ba hati, Dhalla and Jamirta.

*Naraingani subdivision.*

Mograpara.

*Sadar (north).*

Arakul, Basta, Joykrishnapur, Jantrail and Agla.

**Minister in charge: The Hon'ble Sir S. N. Banarji, Kt.**

*No. 1907L.S.-G.—The 25th June 1923.*—The following draft of amendments which, in exercise of the powers conferred by clauses (*k*) and (*l*) of sub-section (*2*) of section 101 of the Bengal Village Self-Government Act, 1919 (Bengal Act V of 1919), the Government of Bengal (Ministry of Local Self-Government) propose to make in the rules published under notification No. 1998L.S.-G, dated the 3rd July 1920, is published for the information of persons likely to be affected thereby.

2. The draft will be taken into consideration on the 6th August 1923, and any objections or suggestions received by the undersigned through District Officers before that date will be duly considered:—

*Draft amendments.*

(1) *Remove* the heading "Distraint and sale of moveable property of defaulter" from above rule 18.

(2) *Add* the following sentence to rule 18, namely:—

"If any of the defaulters shall not, within fifteen days of such publication of the list, pay the sum due, or show to the union board sufficient cause for not paying the same, the procedure prescribed in rules 19 to 27 shall be followed for the recovery of the arrear rate."

(3) For rule 19 *substitute* the following under the heading "Distraint and sale of moveable property of defaulter," namely:—

"19. The president or, if so directed by him, the vice-president shall cause the chaukidar or any other person authorised in writing by the president or the vice-president to levy by the distraint and sale of a sufficient portion of the moveable property of the defaulter, except plough-cattle and tools and implements of trade and agriculture, the

amount of his arrear, together with a sum equal to half the amount of such arrear, by way of penalty in the case of an arrear of rate:

Provided that when the moveable property distrained is shown to the satisfaction of the union board to have been left in the building for repairs or safe custody in the ordinary course of business, it shall be released."

(4) In line 1 of rule 22 after the word and figure "rule 19" *insert* the words "in the case of an arrear of rate," and put a comma after the word "paid" and another comma after the word "rate".

(5) *Omit* the words "for the recovery of the union rate" at the end of rule 26.

**Minister in charge: The Hon'ble Sir S. N. Banarji, Kt.**

**Hooghly.** *No. 1936M.—The 28th June 1923.*—In exercise of the power conferred by clause (*a*) of section 2 of the Calcutta Hackney-carriage Act, 1919 (Bengal Act I of 1919), the Government of Bengal (Ministry of Local Self-Government) are pleased to extend to the Uttarpara Municipality in the district of Hooghly all the provisions of the said Act except sub-section (*1*) of section 6.

**Minister in charge: The Hon'ble Sir S. N. Banarji, Kt.**

**Hooghly.** *No. 1937M.—The 28th June 1923.*—In exercise of the power conferred by sub-section (*1*) of section 84 of the Calcutta Hackney-carriage Act, 1919 (Bengal Act I of 1919), the Government of Bengal (Ministry of Local Self-Government) are pleased to appoint the Commissioners of the Uttarpara Municipality, in the district of Hooghly, to exercise and perform in the said municipality the same powers and duties as are conferred or imposed by the said Act on the Corporation of Calcutta and the Commissioner of Police, respectively.

**Minister in charge: The Hon'ble Sir S. N. Banarji, Kt.**

**Hooghly.** *No. 1938M.—The 28th June 1923.*—In exercise of the power conferred by sub-section (*1*) of section 71 of the Calcutta Hackney-carriage Act, 1919 (Bengal Act I of 1919), the Government of Bengal (Ministry of Local Self-Government) are pleased to make for the Uttarpara Municipality in the district of Hooghly the by-laws which were published for information with notification No. 1089M, dated the 24th March 1923.

S. W. GOODE,
*Secretary to the Government of Bengal (offg.).*

---

## MEDICAL.

**Minister in charge: The Hon'ble Sir S. N. Banarji, Kt.**

**Calcutta.** *No. 1565Medl.—The 26th June 1923.*—Major C. A. Godson, I.M.S., Police Surgeon, Calcutta, is allowed furlough for the period from the 3rd to the 15th October 1921 (both days inclusive) under Army Instruction, India, 319 of 1921, in extension of the leave already granted to him by the Military Department.

S. W. GOODE,
*Secretary to the Government of Bengal (offg.).*

---

## PUBLIC HEALTH.

**Minister in charge: The Hon'ble Sir S. N. Banarji, Kt.**

**Calcutta.** *No. 1360P.H.—The 2nd July 1923.*—In exercise of the power conferred by section 49 of the Indian Ports Act, 1908 (Act XV of 1908), and in supersession of Government notification No. 41Marine of the 15th April 1918, the Government of Bengal (Ministry of Local Self-Government) are pleased to order that the rate of Hospital Port dues levied on vessels entering the Port of Calcutta shall be raised from 9 pies per ton to one anna per ton, with effect from the 5th September 1923.

**Minister in charge: The Hon'ble Sir S. N. Banarji, Kt.**

**Pabna.** *No. 1306P.H.—The 25th June 1923.*—The following draft of a by-law which has been framed by the Commissioners of the Serajganj Municipality, in the district of Pabna, under section 350 of the Bengal Municipal Act, 1884 (Bengal Act III of 1884), and which the Government of Bengal (Ministry of

Local Self-Government) propose to confirm under section 351 of the Act, is published for the information of persons likely to be affected thereby.

II. The draft will be taken into consideration on the 13th August 1923, and any objection or suggestion received by the undersigned through the District Magistrate before that date will be duly considered :—

DRAFT BYE-LAW.

Any person having possession of or control over any land or water on or in which there exists any water hyacinth shall, if so required by a notice in writing signed by the Chairman or the Vice-Chairman of the Municipality, destroy or remove such water hyacinth within the period mentioned in such notice.

PENALTIES.

Fine, Rs. 10; daily fine, Rs. 5.

**Minister in charge: The Hon'ble Sir S. N. Banarji, Kt.**

**Bankura.**

*No. 1349P H.—The 2nd July 1923.*—The following draft of a by-law, which has been framed by the Commissioners of the Sonamukhi Municipality, in the district of Bankura, under section 350 (*e*) of the Bengal Municipal Act, 1884 (Bengal Act III of 1884), and which the Government of Bengal (Ministry of Local Self-Government) propose to confirm under section 351 of the Act, is published for the information of persons likely to be affected thereby

The draft will be taken into consideration on the 1st September 1923, and any objection or suggestion received by the undersigned through the District Magistrate before that date will be duly considered .—

*Draft by-law.*

"No person shall grow Feni thorn on or near a road within the limits of the municipality.

Fine, Rs. 10."

**Minister in charge: The Hon'ble Sir S. N. Banarji, Kt.**

**Hooghly.**

*No. 1351P.H—The 2nd July 1923.*—The following draft of a by-law, which has been framed by the Commissioners of the Bhadreswar Municipality, in the district of Hooghly, under section 350 of the Bengal Municipal Act, 1884 (Bengal Act III of 1884), and which the Government of Bengal (Ministry of Local Self-Government) propose to confirm under section 351 of the Act, is published for the information of persons likely to be affected thereby.

The draft will be taken into consideration on the 1st September 1923, and any objection or suggestion received by the undersigned through the District Magistrate before that date will be duly considered .—

*Draft by-law.*

32A Any person having possession of or control over any land or water on or in which there exists any water-hyacinth so as to affect public health, shall, if so required by a notice in writing signed by the Chairman or Vice-Chairman of the Municipality, destroy or remove such water-hyacinth within the period mentioned in such notice Provided that such notice shall be issued for the whole of an area to be determined by the Municipal Commissioners with a view to secure that the clearance is effective.

Fine, Rs. 10. Daily fine, Rs. 2.

**Minister in charge: The Hon'ble Sir S. N. Banarji, Kt.**

**Bankura.**

*No 1353P.H.—The 2nd July 1923.*—The following draft of a by-law, which has been framed by the Commissioners of the Vishnupur Municipality, in the district of Bankura, under section 350 of the Bengal Municipal Act, 1884 (Bengal Act III of 1884), and which the Government of Bengal (Ministry of Local Self-Government) propose to confirm under section 351 of the Act, is published for the information of persons likely to be affected thereby.

The draft will be taken into consideration on the 1st September 1923, and any objection or suggestion received by the undersigned through the District Magistrate before that date will be duly considered :—

*Draft by-law.*

Any person having possession of or control over any land or water on or in which there exists any water-hyacinth shall, if so required by a notice in writing signed by the Chairman or Vice-Chairman of the Municipality, destroy or remove such water-hyacinth within the period mentioned in such notice, provided that such notice shall be issued simultaneously for the whole of an area to be defined by the Municipality and bounded by rivers or large khals or where there are no rivers or large khals for a sufficiently large area to be determined by the Municipal Commissioners with a view to secure that the clearance is effective.

A breach of the by-law shall be punished with a fine which may extend to Rs. 25

**Minister in charge: The Hon'ble Sir S. N. Banerji, Kt.**

*No. 1320P.H.—The 28th June 1923.*—In exercise of the power conferred by section 33 of the Bengal Vaccination Act, 1880 (Bengal Act V of 1880), the Government of Bengal (Ministry of Local Self-Government) are pleased to make the following rules, namely :—

RULES.

[In these rules "the Act" means the Bengal Vaccination Act, 1880, as amended by the Bengal Vaccination (Amendment) Act, 1911.]

**Qualifications and duties of Inspectors and Sub-Inspectors.**

**Qualifications.**

1. Every candidate appointed as a Sub-Inspector or Inspector shall ordinarily be required to possess the qualifications enumerated below :—

(*a*) He shall not be more than 25 years of age.

(*b*) He shall be physically active and able to walk, ride or cycle long distances.

(*c*) He shall be a domiciled resident of the district.

(*d*) He shall possess a working knowledge of the English language, the Matriculation Examination of the Calcutta University being adopted as the standard for this purpose.

(*e*) He shall possess a practical knowledge of the provisions of the Act and the registers, returns, forms and certificates required to be maintained under the Act.

(*f*) He shall possess an adequate knowledge of the technique of vaccination, including the—

(*i*) phenomena of the vaccine disease;

(*ii*) approved methods of performing vaccination;

(*iii*) approved methods of collecting and storing lymph,

(*iv*) ability to recognise a satisfactory vesicle and cicatrix and the remedial steps necessary in the case of complications, and

(*v*) phenomena of small-pox.

2. In selecting candidates for the posts of Sub-Inspector and Inspector, preference shall be given to those candidates who have attended a vaccination class at any one of the medical schools and colleges recognised under the Bengal Medical Act, 1914, or passed the examination for the training of Sanitary Inspectors or passed in Hygiene only in the said examination.

**Duties.**

3. Every Inspector and Sub-Inspector shall be under the immediate orders and executive control of the District Health Officer.

4. In addition to the duties imposed upon him by the Act and by the rules and by-laws framed thereunder and also by any other law for the time being in force regarding vaccination, every Inspector and Sub-Inspector shall perform the following duties :—

(*a*) He shall execute and enforce the regulations, rules and orders relating to vaccination, which may be enacted, made or issued by competent authority.

(*b*) He shall inquire into and ascertain the causes, origin and distribution of small-pox within the district and endeavour to advance vaccination as a remedial and a preventive measure.

(*c*) He shall see that vaccination is carried out thoroughly and efficiently by the public vaccinators employed in his jurisdiction.

(*d*) He shall bring to the notice of the District Health Officer all acts of neglect, carelessness, unsatisfactory work and disobedience of orders and instructions on the part of the public vaccinators employed in his jurisdiction.

(*e*) Under the orders of the District Health Officer, he shall direct operations undertaken for the purpose of stamping out small-pox epidemics.

(*f*) He shall divide the area in his jurisdiction into as many groups or circles as there are public vaccinators. After obtaining the approval of the Chairman of the District Board through the District Health Officer to his proposals, he shall furnish for guidance every public vaccinator in his jurisdiction with a list of the villages and their population in the vaccinator's circle. The division of the district into circles may be modified to suit local requirements, but, as far as possible, they shall correspond with police circles to facilitate the obtaining of vital statistics from the police-stations and thanas.

(*g*) He shall arrange, with the approval of the District Health Officer, a tour programme, giving approximately the dates on which he proposes to visit each locality in his jurisdiction. Except in cases of emergency, the tour programme so approved shall not be altered or modified without the previous consent of the District Health Officer. He shall keep the latter informed of his movements by submitting to him weekly post-card reports. As a rule, he shall not remain in any one locality for more than three days, and then only when absolutely necessary. He shall be required to tour for not less than 120 days during the period from the 1st October to the 31st March every year.

(*h*) Unless a full day's work or travelling is performed or unless he is absent from his headquarters for twenty-four hours, the time spent on tour shall not be counted as a day on tour. Days of commencement or termination of tours on which journeys are begun late or end early shall not be counted for the purpose of the preceding rule.

(*i*) He shall tour within the area in his jurisdiction consecutively and systematically and shall be required to inspect and report on the work of every public vaccinator in his jurisdiction. No tour shall be less than seven days in duration and shall comprise the adequate inspection of at least one thana.

(*j*) Every Inspector shall visit the jurisdiction of every public vaccinator once and every Sub-Inspector twice every year.

(*k*) During the period from the 1st October to the 31st March every year, he shall not remain at his headquarters longer than seven days (including Sundays and other holidays) in any one month.

(*l*) Unless specially exempted, he shall tour by riding a pony or a cycle which he is required to maintain or keep for his work.

(*m*) He shall furnish the local authorities at least twenty-four hours' notice of his proposed visits for inspecting the vaccinated children of the locality.

(*n*) He shall inspect vaccinated children in their villages and not collect them at centres of his jurisdiction.

(*o*) He shall test the village vaccination registers (Vaccination Form No. 1) calling over the names entered in them, compare the results therein shown with the arms of the children inspected and enter opposite every name the result observed, initialling and dating his remarks. He shall satisfy himself that every child absent at his inspection is satisfactorily accounted for by the village headman or panchayat or some other trustworthy person, and make a suitable note opposite the name of every absentee. He shall not be accompanied by the public vaccinators during such inspections He shall see that the ages entered of those persons vaccinated are approximately correct, especially in the cases of infants under one year of age.

(*p*) He shall keep a record of every unvaccinated child in the localities visited and report to the District Health Officer once a month the proportion of children left unprotected in every locality.

(*q*) During his tour, he shall verify deaths from small-pox and submit the results of verification to the District Health Officer (Vaccination Form No. 35)

(*r*) He shall carry with him on tour a diary (Vaccination Form No. 34), which he shall post up from day to day. He shall keep his diary carefully, correctly and fully, especially the "Inspection note" column, which shall be conscientiously written up. He shall submit his diary before the fifteenth day of the month following that to which it relates.

(*s*) He shall carry with him on tour a reserve stock of vaccinating lancets and vaccine lymph, indenting for a regular reserve supply of the latter for use in emergencies and for issue to public vaccinators, should their supply be exhausted.

(*t*) He shall receive or prepare, check, tabulate, and forward to the District Health Officer the monthly and other returns from the public vaccinators in his jurisdiction

(*u*) He shall submit such report or reports in regard to the work of the area in his jurisdiction as may be required from him by competent authority.

(*v*) Every Inspector shall check the work performed by the Sub-Inspectors in his district and shall report to the District Health Officer on their work and conduct.

(*w*) In the month of September every year, every Inspector shall be required to give a course of instruction to all the public and apprentice vaccinators in his district.

(*x*) During the period from the 1st April to the 30th September every year, he shall be employed on such duties other than those relating to vaccination as may be ordered by the District Health Officer, under the direction of the Chairman.

(*y*) He shall submit on the prescribed dates the various returns and indents enumerated below :—

(*i*) Weekly diary.
(*ii*) Monthly vaccination report.
(*iii*) Quarterly vaccination report.
(*iv*) Annual returns of vaccination.
(*v*) Indent for surgical instruments.
(*vi*) Indent for vaccine lymph.
(*vii*) Indent for vaccination forms.

## Rules relating to Public Vaccinators.

### (a) Qualifications of Public Vaccinators.

1. (i) No person shall be appointed as a public vaccinator who does not possess a certificate of competency granted after oral and practical examination by one of the officers mentioned below :—

(a) Superintendent of a medical school which is recognised under the Bengal Medical Act, 1914.
(b) Health Officer of a District Board or of a Municipality
(c) Civil Surgeon or other principal civil medical officer of a district
(d) Military medical officer of a cantonment.
(e) Chief Sanitary Officer, Asansol Mines Board of Health

(ii) Such certificate shall be in the following form :—

I hereby certify that I have examined.....in the manner contemplated by rules 1 (i) and 3 of the Rules under the Bengal Vaccination Act, 1880, and that I find him qualified for the office of public vaccinator.

*Superintendent of Medical School, or Civil Surgeon or Principal Civil Medical Officer of the district of , or Health Officer of the District Board / Municipality of or Principal Military Medical Officer of Cantonment, or the Chief Sanitary Officer, Mines Board of Health, Asansol.*

2. Every person who desires to present himself for the above examination shall, if he has not attended a vaccination class at one of the medical schools in India and attained a certificate of competency from the Superintendent thereof, submit evidence to the satisfaction of the certifying authority referred to in rule 1 (i), prior to his examination, that he has been engaged in vaccination work, in the capacity of an apprentice or assistant, for a period of at least six months

3. Every candidate for the office of public vaccinator shall be required to satisfy the certifying authority mentioned in rule 1 in respect of his—

(a) knowledge of reading and writing, as required by the Middle School Vernacular Examination ;
(b) knowledge of the phenomena of the vaccine disease ,
(c) knowledge of the approved methods of performing vaccination ,
(d) knowledge of the methods of collecting and storing lymph ,
(e) ability to recognise a satisfactory vesicle and cicatrix ,
(f) general acquaintance with the phenomena of small-pox ,
(g) knowledge of the provisions of the Bengal Vaccination Acts (1880 and 1911) in so far as they relate to the duties of a public vaccinator ;
(h) knowledge of the registers, returns, forms, and certificates required to be maintained under the Vaccination Acts and the rules framed thereunder.

### (b) Fees.

4. The fees for any vaccination operation performed outside the town of Calcutta shall be payable according to the following scale —

| | |
|---|---|
| At a public vaccine station ... ... ... ... | Free of charge. |
| At a private residence or at any place other than a public vaccine station if the vaccinator attends at the request of an adult person or of the parent or guardian of a child ... ... ... ... | Four annas for each operation This may be reduced or remitted if any District Board or Municipality by special or general order so direct. |

Provided that the total amount payable for any number of operations performed in one family at the same time shall not exceed eight annas.

5. Every public vaccinator shall grant a printed receipt for each amount received by him as fees. All such amount shall be deposited at the office of the Superintendent of Vaccination, or other authorised officer in charge of vaccination, every Saturday or oftener if that officer so orders, and the said officer shall, once a week, remit the same to the Treasury :

Provided that if the amount realised at any time exceeds the sum of Rs. [illegible] amount shall forthwith be deposited as aforesaid.

**(c) Vaccination of females.**

6. If the head vaccinator, or, where there is no head vaccinator, the vaccinator considers that any female, who, from the custom of the country, is unable to attend at the public vaccine station, is too poor to pay the fee payable for vaccination at a private residence, he shall report the fact to the Superintendent of Vaccination or other authorized officer in charge of vaccination, or the Chairman of a Municipality or of a District Board concerned, who may, if he concurs in the vaccinator's opinion, direct that the whole or any portion of the fee be remitted.

**(d) Supply of lymph.**

7. Vaccine lymph obtained from the Bengal Vaccine Depot shall ordinarily be used in all vaccine operations:

Provided that lymph—

(a) taken direct from a calf, or

(b) from the arm of a perfectly healthy subject,

may also be employed on condition that it be at once transferred to the arm of the unprotected person or child.

**(e) Forms, Registers and Returns.**

8. The following register shall be kept at every public vaccine-station:—

*Register of vaccination of the.....station for the month of.....*

* * * * * * *

9. The annual return required to be submitted by the Superintendent of Vaccination under section 32 shall be in the following form —

*Annual Return of Vaccinations for the year.*

* * * * * * *

10. The minutes of notices of vaccination which a Registrar of Births is required to enter under section 20 shall be in the form of a counterfoil to schedule E to the Act, and shall contain the following headings —

(a) Name and address of person to whom notice has been issued.
(b) Name of child.
(c) Date of birth.
(d) Date of notice
(e) Number of entry in birth register.
(f) Signature of registrar.

11 The duplicates of certificates which a Registrar of Births is required to register under section 20, and the further particulars required by section 21, shall be in the following form .—

*Register of Vaccination*

* * * * * * *

12 The monthly return of cases which (under section 23 read with section 25) every Registrar of Births is required to transmit to the Superintendent of Vaccination, or Civil Surgeon, or other principal Civil or Military Medical Officer of the district or cantonment, shall be in the following form :—

*Return of cases in which notice of vaccination has been sent but certificate has not been received for the month of.....*

* * * * * * *

13. (i) A register shall be kept at every public vaccine station in which shall be entered, in the following form, all sums received as fees by any public vaccinator attached to such station :—

*Form A—Receipts.*

Register of Receipts under Bengal Act V of 1880 at the Vaccine Depot in the { Municipality of..... / District of.....

* * * * * * *

(ii) A register shall also be kept at every such station in which shall be entered in the following form the amounts expended by any public vaccinator attached to the station :—

*Form B—Disbursements.*

Register of Expenditure under Bengal Act V of 1880 at the Public Vaccine Depot for the month of.....

* * * * * * *

14. Every Registrar of Births shall keep a register of vaccination in the following form, of which columns 1, 2, 3, 4 and 5 shall be filled up on issue of the notice referred to in section 18, and the remaining columns on receipt of the duplicate certificate mentioned in section 19 :—

*Register of Vaccination for.....*

* * * * * * * *

15. The Registrar of Births shall, as soon after the first of every month as possible, forward a return to the Superintendent of Vaccination, or other authorized officer in charge of vaccination, in the following form, showing all cases in which a notice has been served under section 3 or a certificate of postponement granted under section 5, and in which the period mentioned in such notice or certificate has expired without receipt of a certificate of successful vaccination under section 5, or of unsusceptibility under section 6 .—

*Return of cases in which notice of vaccination has been served but certificate has not been received for the month of.....* .

(f) General Instructions.

16. In addition to the duties imposed upon him by the Act and by rules framed thereunder and also by any other law for the time being in force regarding vaccination, every public vaccinator shall perform the following duties —

(a) To visit by rotation every village in his circle, for which purpose he should give sufficient notice to the village headman or panchayat He shall also report to his Sub-Inspector his work and movements by weekly post-cards.

(b) With the assistance of the headman or panchayat, to have collected at some central and convenient place in the village all such unprotected children in the village as are brought up for vaccination and to operate upon every such child and to maintain a list of the unprotected children of every village for the purpose of issuing notices and instituting prosecutions, if necessary.

(c) With the permission of the headmaster, to visit every school in his circle and endeavour to vaccinate all the unprotected pupils, care being taken not to use any compulsion or pressure of any kind.

(d) Before leaving a village, to see that the names of the vaccinated have been entered in the village register, which he shall sign in proof of the entries correctly made. On his return visit on completion of the seventh day, for the purpose of examining the work, to record in the appropriate column of the register the results of the operations.

(e) To operate in the approved method in four points with a lancet only

(f) To attend regularly the public vaccine stations or depot for operating free of charge.

(g) On the occurrence of local outbreaks of small-pox in his circle, to report to his Sub-Inspector the occurrence without delay, and to press on vaccination as rapidly as possible in and around the infected locality so as to vaccinate every unvaccinated person.

(h) To report similarly as in the preceding clause every other epidemic occurring in his circle and coming to his notice.

(i) To submit in the prescribed forms the required reports and returns of his work.

(j) During the period from the 1st April to the 30th September every year, to carry out such duties other than relating to vaccination as may be ordered by competent authority.

(k) In the month of September every year, to attend at the district headquarters and to undergo the prescribed course of instruction given by the Inspector.

(l) To be responsible for the due care and preservation of the [illegible] equipment and other articles supplied to him for the discharge of his duties.

17. Whenever it shall come to the notice of a public vaccinator that any child required to be vaccinated according to the provisions of the Act is still unprotected, he shall request the parent or guardian of such child to have the same so vaccinated forthwith and shall explain to him the penalties he may incur under the Act if he fails to do so, and if such parent or guardian does not comply with the vaccinator's requisition the latter shall at once bring the matter to the notice of the Superintendent of Vaccination, or other authorised officer in charge of vaccination.

18. Whenever it shall come to the notice of a public vaccinator that a person whose age exceeds 14 years is still unprotected, he shall request such unprotected person to submit himself to be vaccinated forthwith; and in the event of the latter failing to do so the public vaccinator shall at once bring the matter to the notice of the Superintendent of Vaccination in order that the said unprotected person may be served with a notice under section 11.

19. When public vaccine stations have been appointed under the Act, and the days and hours of the public vaccinators' attendance at such stations have been fixed and published under section 14 (read with section 25), the public vaccinators attached to each vaccine station shall regularly attend thereat on the specified days and within the specified hours.

20. When a child has, under the provisions of section 4, been re-vaccinated, the fact of such re-vaccination shall be entered by the vaccinator in the appropriate vaccine register.

[Notifications No. 963San., dated the 28th March 1912, No 56T-San., dated the 24th May 1917, No 988San, dated the 23rd January 1919, and No 493San, dated the 14th April 1919, are hereby cancelled.]

**Minister in charge: The Hon'ble Sir S. N. Banarji, Kt.**

**Midnapore.**

*No. 1355P.H.—The 2nd July 1923.*—The following draft of a by-law, which has been framed by the Commissioners of the Midnapore Municipality, under section 350 of the Bengal Municipal Act, 1884 (Bengal Act III of 1884), and which the Government of Bengal (Ministry of Local Self-Government) propose to confirm under section 351 of the Act, is published for the information of persons likely to be affected thereby.

The draft will be taken into consideration on the 1st September 1923, and any objection or suggestion received by the undersigned through the District Magistrate before that date will be duly considered —

*Draft by-law.*

Any person having possession of or control over any land or water on or in which there exists any water hyacinth shall, if so required by a notice in writing signed by the Chairman or Vice-Chairman of the Municipality and stating clearly the boundaries of the area to which the notice applies, destroy or remove such water hyacinth within the period mentioned in such notice

Penalty Rs. 10, in a continuous offence Rs. 2 per day.

S W. GOODE,

*Secretary to the Government of Bengal (offg).*

---

**Orders by the Surgeon-General with the Government of Bengal.**

*No. 9537, dated Calcutta, the 27th June 1923.*—Assistant Surgeon Bidhu Bhusan Pal, Bhola subdivision and dispensary, Bakarganj district, is granted leave on average pay for fifteen days, under article 81 (*b*) (*ii*) of the Fundamental Rules, with effect from the 21st June 1923.

*No. 9544, dated Calcutta, the 27th June 1923.*—Civil Assistant Surgeon Upendra Nath Das is appointed to act temporarily as House Surgeon, Presidency General Hospital, Calcutta, with effect from the 9th June 1923, *vice* Lieut. C. G. deGruyther, I.M.D.

D. MCCAY, LT.-COL., I.M.S.,

*Surgeon-General with the Government of Bengal (offg.)*

## EDUCATION DEPARTMENT.

### NOTIFICATIONS

**Minister in charge: The Hon'ble Mr. P. C. Mitter, C.I.E.**

*No 1885Edn.—The 28th June 1923.*—Mr W. A. Jenkins of the Indian Educational Service, Bengal, is allowed leave from the 15th April to the 8th November 1923, viz, the summer vacation of the Dacca University from the 15th April to the 30th June 1923, and leave on average pay from the 1st July to 8th November 1923 (including leave for seventeen days on account of privilege leave on full pay at his credit), under rule 81 (*b*) (*i*) and 82 (*d*) of the Fundamental Rules.

**Minister in charge: The Hon'ble Mr. P. C. Mitter, C.I.E.**

**Rajshahi.**

*No. 1894 Edn.—The 29th June 1923* -Babu Akshoy Kumar Mukharji, District Inspector of Schools, Rajshahi, was allowed combined leave for two months and nineteen days, with effect from the 5th January 1923, under article 232 of the Civil Service Regulations (new), viz, privilege leave for fourteen days under article 260 of the Civil Service Regulations and ordinary furlough for the remaining period under article 325 of the Regulations

This cancels notification No 1507 Edn, dated the 30th April 1923

**Minister in charge: The Hon'ble Mr. P. C. Mitter, C.I.E.**

**Rajshahi.**

*No. 1895Edn.—The 29th June 1923*—Babu Jajneswar Chakravarty, Subdivisional Inspector of Schools, Naogaon, acted as District Inspector of Schools, Rajshahi, and in the Bengal Educational Service, with effect from the 12th January 1923 to the 23rd March 1923 (both days inclusive), during the absence, on leave, of Babu Akshoy Kumar Mukharji

**Minister in charge: The Hon'ble Mr. P. C. Mitter, C.I.E.**

**Pabna.**

*No 1898Edn.—The 29th June 1923* -Maulvi Muhammad Timur, District Inspector of Schools, Pabna, was allowed leave on average pay for two months and eleven days (entirely on account of privilege leave at his credit), with effect from the 16th April 1923, or any subsequent date on which he availed himself of it, under rule 81 (*b*) (*ii*) of the Fundamental Rules

**Minister in charge: The Hon'ble Mr. P. C. Mitter, C.I.E.**

**Pabna.**

*No. 1899Edn.- The 29th June 1923* -Maulvi Dalluddin Ahmed (II), Subdivisional Inspector of Schools, Pabna, Sadar, was appointed to act in the Bengal Educational Service as District Inspector of Schools, Pabna, *vice* Maulvi Muhammad Timur, on leave

**Minister in charge: The Hon'ble Mr. P. C. Mitter, C.I.E.**

**Calcutta.**

*No. 1902Edn —The 29th June 1923* —The Government of Bengal (Ministry of Education) are pleased to appoint the Hon'ble Sir Abdur Rahim, Kt, and Maulvi A. K Fazlul Huq to be members of the Board of Visitors for the Elliott Madrasah Hostel and the Baker Madrasah Hostel, Calcutta, *vice* the Hon'ble Nawab Sir Syed Shamsul Huda, K.C.I.E, and the Nawab Serajul Islam, Khan Bahadur, deceased.

**Minister in charge: The Hon'ble Mr. P. C. Mitter, C.I.E.**

**Birbhum.**

*No. 1907Edn.—The 2nd July 1923*—Maulvi Abul Hashem Khan Chaudhuri, District Inspector of Schools, Birbhum, was allowed leave on average pay for two months, with effect from the 5th April 1923, under rule 81 (*b*) (*ii*) of the Fundamental Rules

This cancels notification No. 226Edn, dated the 25th January 1923.

**Minister in charge: The Hon'ble Mr. P. C. Mitter, C.I.E.**

**Birbhum.**

*No. 1908Edn.—The 2nd July 1923.*—Babu Debendra Nath Das Gupta, Subdivisional Inspector of Schools, Birbhum Sadar, was placed in charge of the current duties of the District Inspector of Schools, Birbhum, in addition to his own duties, during the absence, on leave, of Maulvi Abul Hashem Khan Chaudhuri.

J N ROY,

*Secretary to the Government of Bengal.*

## MISCELLANEOUS.

**Minister in charge : The Hon'ble Mr. P. C. Mitter, C.I.E.**

*No. 1201Mis.—The 26th June 1923.*—In exercise of the power conferred by sub section (2) of section 7 of the Indian Registration Act, 1908, the Government of Bengal (Ministry of Education) are pleased to amalgamate with the office of the Registrars the office of all Sub Registrars in charge of Sadar offices (including the *exofficio* Sub-Registrar of Darjeeling) subordinate to such Registrars, and to authorize all such Sub-Registrars to exercise and perform, in addition to their own powers and duties, all the powers and duties of the Registrar except the powers of supervision and control conferred upon the Registrar under section 68 of the said Act.

II. Paragraph 3 of Bengal Government notification, dated the 21st June 1871, on the subject is hereby cancelled.

**Minister in charge : The Hon'ble Mr. P. C. Mitter, C.I.E.**

**Mymensingh.**

*No. 1203Mis.—The 26th June 1923.*—In exercise of the power conferred by section 3 of the Bengal Muhammadan Marriages and Divorces Registration Act, 1876 (Bengal Act 1 of 1876), the Government of Bengal (Ministry of Education) are pleased to appoint Maulvi Matiur Rahman temporarily to be a Muhammadan Registrar within police-station Bhaluka, in the district of Mymensingh, during the absence, on leave, of Maulvi A. K. M Fazlul Haq, or until further orders.

**Minister in charge : The Hon'ble Mr. P. C. Mitter, C.I.E.**

**Mymensingh.**

*No 1204Mis —The 26th June 1923.*—In exercise of the power conferred by section 2 of the Kazis Act, 1880 (Act XII of 1880), the Government of Bengal (Ministry of Education) are pleased to appoint Maulvi Matiur Rahman temporarily to be the Kazi for the celebration of marriages and the performance of other rites and ceremonies within police-station Bhaluka, in the district of Mymensingh, during the absence, on leave, of Maulvi A K M Fazlul Huq, or until further orders.

**Minister in charge: The Hon'ble Mr. P. C. Mitter, C I.E.**

**Khulna.**

*No. 1229Mis —The 29th June 1923.*—It is hereby notified for general information that, under section 5 of the Indian Registration Act, 1908 (XVI of 1908), the Government of Bengal (Ministry of Education) sanction the abolition, with effect from the 16th July 1923, of the office of the Joint Sub-Registrar of Bagerhat in the district of Khulna.

**Minister in charge: The Hon'ble Mr. P. C. Mitter, C.I.E.**

**Khulna.**

*No. 1230Mis —The 29th June 1923.*—In pursuance of section 5 of the Indian Registration Act (XVI of 1908), the Government of Bengal (Ministry of Education) are pleased to direct that—

(*a*) thana Rampal, in the district of Khulna, shall be formed into a registration sub-district to be called the Rampal sub-district,

(*b*) the registration sub-district of Bagerhat in the same district shall comprise thana Bagerhat, excluding police-station Kachua

2. In pursuance of sub-section (*1*) of section 7 of the said Act the Government of Bengal (Ministry of Education) are pleased to direct the establishment of an office at Rampal to be styled the office of the Sub-Registrar of Rampal.

This notification shall take effect on and from the 16th July 1923

**Minister in charge : The Hon'ble Mr. P. C. Mitter, C. I.E.**

**Bakarganj.**

*No. 1234Mis.—The 30th June 1923.*—Under the provisions of section 7 of the Indian Registration Act, XVI of 1908, and in continuation of notification No 1458Mis., dated the 15th July 1922, the Government of Bengal (Ministry of Education) are pleased to sanction the retention of the office of the Sub-Registrar of Muladi, in the district of Bakarganj, for a further period of one year, with effect from the 1st July 1923.

**Minister in charge : The Hon'ble Mr. P. C. Mitter, C.I.E.**

*No. 1235Mis.—The 2nd July 1923.*—Khan Sahib Qurbanullah, Inspector of Registration Offices, is granted an extension of leave, on average pay, for twelve days (on account of privilege leave at his credit), under article 81 (*b*) (*ii*) of the Fundamental Rules, in continuation of the leave already granted to him under Government notification No. 1039Mis., dated the 25th May 1923.

J. N. ROY,

*Secretary to the Government of Bengal.*

## Orders by the Inspector-General of Registration, Bengal.

*No. 239.—The 25th June 1923.*—Babu Surendra Nath Ray, Sub-Registrar of Kishoreganj, in the district of Rangpur, is allowed leave on average pay for one month (entire period being on account of privilege leave at his credit), under rule 81 (*b*) (*ii*) of the Fundamental Rules, with effect from the date on which he may be relieved.

**Rangpur.**

*No. 240.—The 25th June 1923.*—Maulvi Saiyid Abu Zafar, Sub-Registrar of Sadullapur, in the district of Rangpur, is allowed leave on average pay for one month (entire period being on account of privilege leave at his credit), under rule 81 (*b*) (*ii*) of the Fundamental Rules, with effect from the date on which he may be relieved.

**Rangpur.**

*No. 241.—The 25th June 1923.*—Babu Sasanka Sekhar Batabyal, Sub-Registrar, attached to Burdwan, officiating at Shambazar, in the district of Hooghly, is allowed leave on average pay for one month (entire period being on account of privilege leave at his credit), under rule 81 (*b*) (*ii*) of the Fundamental Rules, with effect from the date on which he may be relieved.

**Burdwan.**
**Hooghly.**

*No. 242.—The 25th June 1923.*—Babu Atul Krishna Banarji, Sub-Registrar of Dumuria, in the district of Khulna, is allowed leave on average pay for two months (of which seven days being on account of privilege leave at his credit), under rule 81 (*b*) (*ii*) of the Fundamental Rules, in extension of the leave granted to him in notification No. 141, dated the 3rd May 1923.

**Khulna.**

*No. 243.—The 25th June 1923.*—Maulvi Saiyid Amir Husain, Sub-Registrar, on leave, is appointed to be Sub-Registrar of Egra, in the district of Midnapore.

**Midnapore.**

*No. 244.—The 25th June 1923.*—Maulvi Muhammad Shujauddin, Sub-Registrar, attached to the Sadar Registration Office at Alipore, is appointed to act as Sub-Registrar of Badarganj, in the district of Rangpur, with effect from the afternoon of the 14th June 1923, until further orders.

**24-Parganas.**
**Rangpur.**

*No. 245.—The 25th June 1923.*—Maulvi Mufazilur Rahman, Sub-Registrar of Nanupur, in the district of Chittagong, is allowed leave on average pay for one month, under rule 81 (*b*) (*ii*) of the Fundamental Rules, in extension of the leave granted to him in notification No. 137, dated the 30th April 1923.

**Chittagong.**

*No. 246.—The 25th June 1923.*—Babu Ashutosh Sen Gupta, Sub-Registrar of Pirganj, in the district of Dinajpur, was appointed to act as Sub-Registrar of Gangarampur, in the same district, with effect from the 12th February 1923.

**Dinajpur.**

*No. 247.—The 25th June 1923.*—Maulvi Hakimuddin Ahmad, Sub-Registrar, attached to Dacca, is appointed to act, until further orders, as Sub-Registrar of Teota, in the same district, with effect from the 18th April 1923.

**Dacca.**

*No. 248.—The 25th June 1923.*—Maulvi Saiyid Abdur Rauf, Sub-Registrar of Khalispur, in the district of Jessore, is appointed to be Sub-Registrar of Harinakundu in the same district, with effect from the afternoon of the 5th May 1923.

**Jessore.**

*No. 249.—The 25th June 1923.*—Babu Prabhat Chandra Datta, Sub-Registrar of Muradnagar, in the district of Tippera, was on leave on average pay for eleven days (entire period being on account of privilege leave at his credit), under rule 81 (*b*) (*ii*) of the Fundamental Rules, with effect from the 7th May 1923.

**Tippera.**

*No. 250.—The 25th June 1923.*—Babu Sailendra Nath Mitra, Sub-Registrar attached to Howrah, officiating at Dumuria, in the district of Khulna, is allowed leave on average pay for one month, under rule 81 (*b*) (*ii*) of the Fundamental Rules, with effect from the [illegible] 1923.

**Howrah.**
**Khulna.**

*No. 251.—The 25th June 1923.*—Maulvi Saiyid Dilwar Ali Mirza, Sub-Registrar attached to Murshidabad, is appointed to act, until further orders, as Sub-Registrar of Dumuria, in the district of Khulna, with effect from the 9th June 1923, *vice* Babu Sailendra Nath Mitra, on leave.

Murshidabad. Khulna.

*No. 252.—The 25th June 1923.*—Babu Surendra Nath Mukharji, Sub-Registrar, is allowed leave on average pay for one month (entire period being on account of privilege leave at credit), under rule 81 (*b*) (*ii*) of the Fundamental Rules, in extension of the leave granted to him in this department notification No. 188, dated the 25th May 1923.

*No. 253.—The 25th June 1923.*—Babu Surendra Mohan Sen Mazumdar, Sub-Registrar of Shariakandi, in the district of Bogra, is allowed leave on average pay for twenty-five days (entire period being on account of privilege leave at credit), under rule 81 (*b*) (*ii*) of the Fundamental Rules, in extension of the leave granted to him in this department notification No. 501, dated the 18th November 1922.

Bogra.

This cancels this department notification No. 522, dated the 2nd December 1922.

*No. 254.—The 26th June 1923.*—Maulvi Khundkar Ali Asghar, Sub-Registrar, grade V, Murshidabad, was allowed privilege leave for twenty-one days, under article 260 of the new leave rules, with effect from the 1st November 1921 and furlough on half average salary from 22nd November 1921 to 31st December 1921, under article 325 (*a*) read with article 301 (*a*) of the said rules and leave on half average pay from 1st January 1922 to 20th March 1922, under rules 81 (*c*) (*i*) and 87 (*b*) of the Fundamental Rules.

Murshidabad.

This cancels this department notifications No 577, dated the 23rd December 1921, and No. 85, dated the 23rd February 1922.

*No 255.—The 29th June 1923.*—Maulvi Abdul Ghaffar, Probationer, Comilla, is appointed to act as Sub-Registrar of Madarganj, in the district of Mymensingh, with effect from the 11th June 1923, *vice* Babu Naresh Chandra Patranabis, on leave

Tippera. Mymensingh.

*No. 256.—The 29th June 1923.*—Maulvi Abul Hossain (No II), Sub-Registrar attached to Mymensingh, was appointed to act, until further orders, as Sub-Registrar of Pirganj, in the district of Dinajpur, with effect from the afternoon of the 22nd April 1923, *vice* Maulvi Amiruddin Ahmad, on leave

Mymensingh. Dinajpur.

*No 257.—The 30th June 1923.*—Maulvi Mahbubal Alam, Sub-Registrar, attached to Chittagong, was appointed to act, until further orders, as Sub-Registrar of Nanupur, in the same district, with effect from the afternoon of the 11th May 1923, *vice* Maulvi Mufazzilur Rahman, on leave.

Chittagong.

A ISLAM,

*Inspector-General of Registration, Bengal.*

---

## MARINE DEPARTMENT.

### NOTIFICATIONS

*No 68Marine.—The 26th June 1923.*—Mr. C. W. H. Ansell, Senior Master Pilot, is appointed, until further orders, to act as a Branch Pilot, with effect from the afternoon of the 11th June 1923.

*No. 69Marine.—The 26th June 1923.*—Mr. V. Cooper, Senior Master Pilot, is appointed, until further orders, to act as a Branch Pilot, with effect from the afternoon of the 18th June 1923.

*No. 70Marine.—The 26th June 1923.*—Mr. H. D. Lindquist, Branch Pilot, is granted leave on average pay for two months and six days, under article 81 (*b*) (*i*) of the Fundamental Rules, with effect from the 5th June 1923, P.M.

A. MARR,

*Secretary to the Government of Bengal.*

## COMMERCE DEPARTMENT.

### NOTIFICATIONS

*No. 3029Com —The 2nd July 1923.*—In exercise of the power conferred by section 37 of the Indian Factories Act, 1911 (XII of 1911), as amended by the Indian Factories' Amendment) Act, 1922 (II of 1922), and in supersession of all existing rules on the subject, the Governor in Council is pleased to make the following rules :—

### RULES.

1. These rules may be cited as "The Bengal Factories Rules, 1923."

### PART I —DEFINITIONS

2. **Definitions.**—In these rules—

(*a*) "**the Act**" means the Indian Factories Act, 1911, as amended by the Indian Factories (Amendment) Act, 1922,

(*b*) "**Section**" means a section of the Act,

(*c*) "**Manager**" means the person responsible to the occupier for the working and condition of a factory,

(*d*) "**Scheduled Worker**" means a male person over eighteen years of age who, having been duly authorised in that behalf, works at any operation mentioned in Part I of the Schedule to the Act, or a woman, or male person under the age of 18 years, who, with such authorisation, works at a process involving the use of lead compounds, in accordance with the regulations contained in Part II of the said schedule,

(*e*) "**Inspector**" means, unless there is anything repugnant in the subject or context, an Inspector appointed under section 4 of the Act, and includes Chief Inspector and any Inspector subordinate to him,

(*f*) "**Examining Surgeon**" means a registered practitioner authorized by a certifying surgeon under section 8 to examine persons and to grant provisionally the certificates defined in rules 2 (*g*) and (*h*),

(*g*) "**General Medical Certificate**" means a certificate in prescribed form granted by a certifying surgeon, or by an examining surgeon, to, or in respect of, any person, certifying his age and fitness to work in a factory,

(*h*) "**Scheduled Worker's Medical Certificate**" means a certificate in a prescribed form granted by a certifying surgeon or by an examining surgeon to, or in respect of, a person working at or desirous of working at any process mentioned in the Schedule to the Act.

(*i*) "**Machinery**" or "**Mill Gearing**" includes every shaft whether upright, oblique or horizontal, and every wheel, drum, pulley, rope, chain, wire, driving strap or band by which the motion of the first moving power is communicated to any machine appertaining to any manufacturing process.

*Proviso* (*1*) —When in any area the local Government has, by notification in the local official Gazette, under sub-section (5) of section 4, declared that the District Magistrate or an additional Inspector shall exercise all the powers of an Inspector under the Act, the word "Inspector" shall be held to include such District Magistrate or additional Inspector.

*Proviso* (*2*).—When in any area the local Government has declared, as aforesaid, that a District Magistrate or additional Inspector shall exercise certain powers of an Inspector, the word "Inspector" shall be held to include such District Magistrate or additional Inspector only in so far as any one or more of these rules are specified in the notification

### PART II.—ESTABLISHING A FACTORY

3 **Advice by the Inspector.**—When it is notified to the Inspector that there is an intention to erect or establish a new factory, the Inspector may, and if the occupier so desires, shall, advise the occupier upon the suitability or otherwise of the occupier's design with regard to their convenience for the observance of the provisions of the Act and rules, but not upon any other subject in connection with the factory Advice given under this rule shall not be deemed to exempt the occupier from remedying any defects which may later be subject to objection under the Act or the rules.

4. **Manager of factory.**—During any period for which no person has been designated as manager of a factory the occupier shall himself be deemed to be the manager of the factory for the purpose of these rules.

PART III.—REGISTRATION OF A FACTORY.

5. **Notified factory.**—When an Inspector receives a notice under section 33 (*1*) from any person occupying a factory, he shall, if he has not already done so, include such factory in his register.

6. **Unnotified factory.**—When an Inspector has reason to believe that any premises, situated within the local limits for which he is appointed and not already registered as a factory, ought to be so registered, he shall send to the occupier of the premises a notice intimating his intention of including such premises in his register of factories and shall furnish the occupier with a blank Form A. The occupier, whether protesting against the registration of his premises or not, shall return Form A correctly and completely filled to the Inspector within 15 days of the receipt thereof.

7. **Objection to registration.**—Any person served with a notice under rule 6 may, within 15 days of the receipt of such notice, forward to the Inspector a statement setting forth his objections to the registration of the premises as a factory. Such objections shall be accompanied by all the information required to complete Form A, if this has not already been furnished to the Inspector. The Inspector shall consider and dispose of such objections after making such inquiry as he may deem necessary, and shall then include such premises in his register of factories or not, as the case may be.

PART IV.—SAFETY.

8. **Structures.**—In every factory, all buildings, walls, chimneys, masts, bridges, tunnels, roads, galleries, floors, platforms, stagings, and all structures in common use, whether of a permanent or temporary character, shall be so designed, constructed and maintained as to involve no danger to human life or safety.

Provided that the Inspector shall not accept any such structure if it is designed or constructed so as to contravene the provisions of any other Act.

9. **Prime movers and machinery.**—In every factory, prime movers or other machinery, the steam boilers or other vessels subject to pressure, and all tanks and mains, together with the fittings of each of the aforesaid, shall be free from dangerous structural defects. They shall also be maintained sufficiently free from deterioration, and shall be operated (or attended) by persons of sufficient experience or skill, to satisfy the Inspector that there is no danger to human life or safety from them.

Provided that the Inspector shall not accept any of the objects mentioned if they are of such a nature as to contravene the provisions of any other Act.

10. **Railways and transport.**—In every factory, where there are within the precincts, railways, or other electrical or mechanical means of transport, such railways or means of transport shall be designed, maintained and operated in such a manner as to satisfy the Inspector that there is no danger to human life and safety from them.

Provided that the Inspector shall not accept any such railways or means of transport if they are so designed, maintained and operated as to contravene the provisions of any other Act.

11. **Smoking and use of naked lights.** No person shall smoke or use a naked light or shall cause or permit such light to be used in the immediate vicinity of inflammable material in any factory, and the Manager of every factory shall cause to be exhibited a notice in English and the vernacular prohibiting smoking or the use of naked lights, or both, in all places where they would be dangerous, or where the Inspector may require, and shall take all other reasonable precautions to ensure the observance of this rule.

12. **Lighting.**—Every part of every factory shall be sufficiently lighted during the whole of the periods employed persons are present in it, either by day or night, to avoid danger arising from imperfect visibility, having due regard to the nature of the place and of the work carried on therein, and to a standard which is approved by the Inspector.

13. **Fencing (general).**—In every factory, all moving parts of machinery shall be securely fenced, unless they are so situated that they are in the opinion of the Inspector incapable of causing injury to workers. Fencing so erected shall be designed so that it is impossible for any person to pass between the fencing and a moving part, and also in such a manner as to give protection to a person oiling, cleaning, or otherwise attending to the machinery, and to all persons who may be in the neighbourhood of a moving part while it is in motion.

14. **Fencing (electrical).**—In every factory, all electrical circuits or parts of such, or any objects electrically connected with them, whether commonly or occasionally in an electrified condition and which by reason of their position could cause injury to the person, shall be protected adequately to the satisfaction of the Inspector either by fencing or insulation, or by both, in such a manner as to remove the danger of injury:

Provided that where automatic mechanism is installed for the purpose of immediately removing [illegible] rification on the occurrence of a fault, such mechanism shall be taken into account by the [illegible] when considering the adequacy or otherwise of the protection furnished;

Provided also that in no case shall the Inspector accept as adequate any conditions or combination of conditions which are subject to objection under any other Act.

15. **Fencing (hoists).**—Every hoist and teagle, and every place where commonly material of sufficient weight is raised or lowered, shall, where practicable, be so fenced as to prevent personal injury in its descent.

16 **Fencing (pits).**—Every opening, in the ground or in a floor, which by reason of its depth, situation, construction or contents, could cause personal injury, shall be so fenced as to prevent such injury.

17. **Unsuitable fencing.**—When any plant, machinery, apparatus, or fittings in a factory are not safeguarded from danger to human life, as prescribed in rules 13, 14, 15 and 16, such plant, machinery, apparatus, or fittings shall be deemed not to be securely fenced within the meaning of section 18 (*1*).

18. **Alternatives to fencing.**—If in any case it is represented to the Inspector and agreed to by him in writing, that fencing would unduly obstruct a manufacturing process being carried on in the factory, or would be otherwise impracticable, such other protection shall be provided as the Inspector may prescribe instead of fencing

19 **Failure to comply with fencing orders.**—If the manager of a factory has not complied with an order to fence or otherwise protect any machinery, after having been requested to do so in writing by an Inspector, the latter may, on a subsequent visit, serve on the manager an order in writing prohibiting the use of the machinery in question, until the orders have been carried out and passed by the Inspector as satisfactory

PART V.—HEALTH AND SANITATION

20 **Standard of space.**—In every factory, there shall be provided for each person employed at one time in any room a breathing space of at least 500 cubic feet. For the purpose of this calculation, no height above 15 feet from the floor of such room shall be taken into consideration.

21. **Ventilation.**—Every part of every factory where persons are employed shall be adequately ventilated to the approval of the Inspector.

22 **Injurious gases.**—In every factory where injurious, poisonous or asphyxiating gases, dust, or other impurities are used or are evolved for any process carried on in such factory the danger from such gases, dust, or other impurities shall be guarded against so far as is practicable

23 **Prevention of lead poisoning.**—No person shall be employed in any factory in any operation involving the use of lead compounds, save under the following conditions, namely -

(*a*) Where the dust or fume from a lead compound is produced in the process provision must be made for drawing the fume or dust away from the persons employed by means of an efficient exhaust draught, so contrived as to operate on the dust or fume as nearly as may be at its point of origin.

(*b*) The persons employed must undergo the prescribed medical examination at the prescribed intervals, and the prescribed record must be kept with regard to their health.

(*c*) No food, drink, or tobacco shall be brought into, or consumed in, any room in which the process is carried on, and no person shall be allowed to remain in any such room during meal times

(*d*) Adequate protective clothing in a clean condition shall be provided by the employer and worn by the persons employed

(*e*) Such suitable cloak room, mess room and washing accommodation, as may be prescribed, shall be provided for the use of the persons employed.

(*f*) The rooms in which the persons are employed, and all tools and apparatus used by them, shall be kept in a clean condition

24. **Humidification.**—In every factory or part of a factory wherein the atmosphere is artificially humidified, whether intentionally or unintentionally, the humidification shall not be allowed to reach such a degree that it is injurious to the health of the persons employed.

25. **Drinking water.**—In every factory a supply of water fit for drinking, and consisting of at least as many gallons as there are persons employed in the factory, shall be provided daily free of cost.

26. Such supply shall be derived either from a public or private supply of efficiently filtered drinking water, or from one or more wells or specially reserved tanks so situated as not to be polluted or contaminated by organic matter or other impurities.

27. Proper arrangements approved by the Inspector shall be made for maintaining in a drained and cleanly condition the area round the place where the drinking water is distributed.

28. (*1*) When the drinking water is obtained from an intermittent public water supply, each factory shall be provided with a storage of water of not less than per head of persons employed.

(2) The Inspector may, at any time, in order to satisfy himself that the water supplied is fit for drinking, take samples for analysis, and the cost of the analysis shall be borne by the owner of the factory.

29. **Limewashing.**—In every factory the inside surface of all walls of the rooms in which persons are employed, and all the ceilings or tops of such rooms (whether such walls, ceilings or tops be plastered or not), and all passages and staircases, shall be limewashed completely every 14 months, to date from the time of last limewashing.

30. The local Government may, by special order, exempt any class of factories or parts thereof from the provisions of rule 29, when they are of opinion that the said provisions are not necessary under clause (a) of section 9, or are, by reason of the special circumstances, inapplicable.

31. **Painting.**—All beams, rafters, doors and other wood-work in every factory shall, if not limewashed as required under rule 29, be painted or varnished at least once in five years and shall be kept clean.

32. **Cleanliness.**—No manager of a factory shall cause or allow any rubbish, filth or debris to be accumulated or to remain on any premises over which he has effective control, of such a nature or in such a manner that effluvia therefrom may arise within the factory.

33. No manager of a factory shall permit micturition or evacuation in any place in the factory other than a urinal, privy or latrine as the case may be.

34. **Latrines.**—Every factory not exempted under the proviso to section 13 shall be provided with latrine accommodation.

35. All latrines and urinals within a factory shall be kept in a sanitary state, and shall be limewashed every two months.

36. All latrines in a factory shall be designed and constructed in a manner approved by the Chief Inspector or the Director of Public Health. Latrines shall also be situated, maintained and tended in a manner approved by the Inspector.

37. Every factory which is provided with hand-service latrines only and which has not been exempted under the proviso to section 13, shall be provided with latrine accommodation in a place detached from the other factory buildings, and on the following scale, viz.—

| | |
|---|---|
| Where the number of persons employed at one time does not exceed 50 | 3 seats |
| Where the number of persons employed at one time exceeds 50 | 1 additional seat for every 50 persons or any less number |

38. When females are employed in a factory separate latrines screened off from those for males, and marked in the vernacular in conspicuous letters "For females only" shall be provided. Those for males shall be similarly marked "For men only."

## PART VI. MEDICAL OFFICERS AND EXAMINATIONS.

39. **Powers of Certifying Surgeon.**—The certifying surgeon may authorize any registered practitioner to exercise, subject to the restrictions imposed by rule 51, the function assigned to the certifying surgeon by these rules, and may revoke such authority.

40. The duties of a certifying surgeon as such, and of a registered practitioner authorized under section 8 to exercise his functions (that is to say, an Examining Surgeon), shall comprise the examination of persons employed in a factory or desirous of being so employed, and the grant to them, when qualified, of such medical certificates as may be prescribed in the Act or the rules made thereunder, and the proper endorsement, suspension, or cancellation of such certificates.

41. **Certification fees.**—The occupier or manager of a factory or person examined shall not be chargeable with any fee or consideration of any kind for an examination made or certificate endorsed, suspended or cancelled by the certifying surgeon or examining surgeon, and shall offer no such fee or consideration.

Provided that a registered practitioner may be retained by the occupier of a factory as medical officer in consideration of a salary and that his duties to the occupier may include those of examining surgeon, but no examination made by him, or certificates granted or endorsed by him, shall be paid for separately by the occupier in any form whatever.

42. If an Inspector ascertains that there has been an infraction of rule 41, whether the certificates connected with the infraction are *bona fide* or not, he shall record the infraction and the circumstances in his report, and bring the same to the attention of the authority to which he is subordinate.

43. A certifying surgeon appointed under section 6, or any examining surgeon authorized by such surgeon under section 8, shall fix such place and such times as may be proper for the attendance of persons wishing to obtain certificates of age and physical fitness under sections 7 and 19B. Notice of the place and the times thus fixed shall be given to the manager of any factory concerned within the local limits for which such surgeon, [illegible] examining surgeon, is appointed.

44. **Medical Certificates.**—Every certifying surgeon shall keep a bound book containing forms in foil and counterfoil as reproduced in Form C in the Schedule appended to these rules, for use as general medical certificates, and a bound book containing forms in foil and counterfoil as reproduced in Form D for use as Scheduled Workers' Medical Certificates Such forms shall in each case be numbered consecutively, and shall be printed on durable material.

45. Every certificate granted by a certifying surgeon under section 7 or 19B shall be prepared by filling up the foil and counterfoil, on both of which shall also be impressed the left thumb mark of the person in whose name the certificate is granted.

46. The certifying surgeon shall, when satisfied as to the correctness of the entries made therein, sign the foil and initial the counterfoil, and shall deliver the foil to the person at whose request the certificate was granted The foil so delivered shall be the certificate granted under section 7 or section 19B as the case may be

47. If the certifying surgeon refuses, for reasons to be stated in writing, to grant to any person a general medical certificate, or if he revokes such a certificate, granted by a certifying or examining surgeon, no fresh application for a certificate shall be made on behalf of such person until a period of three months has elapsed, unless the certifying surgeon otherwise gives permission in writing at the time of revoking or refusing to grant the certificate

48. If a certifying surgeon refuses to grant to any person a Scheduled Worker's Medical Certificate, or if he suspends or revokes such a certificate granted by a certifying or examining surgeon, no further application shall be made by, or on behalf of, that person for the grant or restoration of a certificate until after such period not exceeding three months as the certifying surgeon may prescribe in writing

49. Every certifying surgeon shall take the names and certificate numbers of all children who have been granted provisional certificates since his previous visit, and who are not produced at the time of his visit, and shall forward the same to the Inspector together with a notice of the action taken by him under rule 57

50. If so required by a manager or occupier, or by a person, or by the parents of such person if he be a child, with respect to whom he has refused or revoked a general medical certificate, or refused, suspended, or revoked, a Scheduled Worker's Medical Certificate, the certifying surgeon shall state in writing his reasons for such refusal, suspension, or revocation

51 Every registered practitioner authorized under rule 39 to act as an examining surgeon shall grant general medical certificates and Scheduled Worker's Medical Certificates in the manner described in rules 44, 45, 46, 47 and 48 with the proviso that such certificates shall have the word "Provisional" printed or stamped on the foil, and that the left thumb mark of the person in respect of whom the certificate is granted shall be taken on the counterfoil only, and provided that a certificate so granted shall lapse and become invalid on a date three months after it was granted, unless it is confirmed by the certifying surgeon or cancelled by him under rule 57

52 A certificate issued by an examining surgeon shall be deemed to have been confirmed by the certifying surgeon, only when it has in his presence been impressed with the left thumb mark of the person in respect of whom it has been granted, and also when the counterfoil has been signed by the certifying surgeon, and he has placed his initials against the deletion of the word "Provisional"

The thumb mark taken on the foil should be identical with that previously taken on the counterfoil.

53 **Arrangements for medical examination.**—A certifying surgeon, within the local limits for which he is appointed, shall, unless otherwise directed by the local Government in rules made under the Act, visit every factory in which children are employed as follows —

| | | Visits per annum |
|---|---|---|
| (a) A—*Textile factories*— | | |
| (1) Employing 150 children and under | ... | 6 |
| (2) Employing over 150 children | . | 12 |
| B —*Non-textile factories*— | | |
| (1) Employing over 150 children | | 6 |
| (2) Employing 150 children and under | . | In accordance with the requirements of the Chief Inspector of Factories, Bengal. |

(b) He shall give previous notice of every visit

54. At every visit the manager shall produce before him, at such time as the certifying surgeon may fix, all children employed in the factory, whether actually at work or not, and who are not in possession of general medical certificates, and all Scheduled Workers employed in the factory, whether at work at that time or not

55. The certifying surgeon shall personally examine every child who is in possession of a provisional certificate granted under section 8, and shall, if satisfied as to its correctness, confirm it in the manner prescribed in rule 52 and return it to its owner

56. If on examination the certifying surgeon is of opinion that the person examined is under the age of 12 years or is not fit for employment in a factory, he shall retain the certificate, write on it the word "Cancelled," and [illegible] same, and shall

then return the certificate with such remarks, if any, as he may think fit to make, to the examining surgeon who granted it

57. **Cancellation of provisional certificates.**—The certifying surgeon may cancel the provisional certificate granted to any child who is not produced, with effect from the date of his visit, or he may grant permission to the child to continue in employment for not more than 3 months, in accordance with section 8 of the Act.

58. **Certification of adults.**—When the manager of a factory or an Inspector desires to establish that a person is of sufficient age and is otherwise fit to be employed in a factory for the periods permitted to adults, the certifying or examining surgeon shall on request examine the person, and, if satisfied, grant a general medical certificate in which the person's age and fitness shall be stated. Such certificates shall be liable to be cancelled in the manner described in rule 56

59 **Certification of scheduled workers.**—The certifying surgeon at every visit shall personally examine every Scheduled Worker and every person presenting himself with the desire to become a Scheduled Worker, and shall confirm, grant, endorse, suspend, or cancel, certificates in respect of such persons in accordance with these rules and any medical regulations for Scheduled Workers for the time being in force under the Act.

PART VII —HOURS OF EMPLOYMENT AND HOLIDAYS.

60. **Working hours to be fixed.**—In every factory the manager shall fix specified hours in accordance with the Act for the employment of each person employed in such factory, and no person shall be employed except during such hours.

61 **Normal limits of working hours.**—In all factories and subject to any exceptions and exemptions permitted under the Act or the rules made thereunder—

No person (which includes women and children) shall be employed—

(*a*) On Sunday
(*b*) For more than 60 hours in any one week
(*c*) For more than 11 hours in any one day
(*d*) For more than 6 hours without an interval of rest of at least one hour
(*e*) For any period in any factory if he has already been employed on the same day in any other factory

No woman or child shall be employed—

(*f*) Between the hours of 7 o'clock in the evening and 5-30 o'clock in the morning

No child shall be employed—

(*g*) For more than 6 hours in any one day
(*h*) For any period whatever unless in possession of a General Medical Certificate showing that he is not less than twelve years of age and fit to work in a factory.
(*j*) For more than four hours without an interval of rest, unless his total hours of work in the day are less than five and a half

No Scheduled Workers shall be employed—

(*k*) for periods other than those defined in notifications issued under the Act in respect of such work

No exemption or exception from sub-clauses (*f*), (*g*) and (*h*) is permissible in any circumstances whatever.

62 **Underage children in factories.**—If a child over the age of six years is found inside any room or part of a factory in which room or part children are employed, and in which any manufacturing process or work incidental to any manufacturing process is being carried on, he shall, until the contrary is proved, be deemed to be employed in the factory.

63 **Exemptions.**—When the manager of any factory desires to employ one or more persons contrary to sub-clauses (*a*), (*b*), (*c*), (*d*), (*e*), (*j*), or (*k*) of rule 61, he shall, before doing so, inform in writing (in Form H) the Inspector prescribed for this purpose, and shall also furnish the Inspector with all the relevant information he may require The Inspector shall thereafter, as soon as practicable, inform the manager in writing whether or not his proposal is in accordance with any of the exemptions permissible under the Act and sanctioned by the local Government. If the proposal is sanctioned, the manager shall be furnished by the Inspector with an Exemption Order in Form K in the Schedule annexed to these rules, signed by the Inspector.

64. (*1*) No person shall be employed in a factory for periods other than those prescribed in sub-clauses (*a*), (*b*), (*c*), (*d*), (*e*), (*j*) or (*k*) of rule 61, unless the manager is in possession of an Exemption Order issued under rule 63 in respect of the person or class of persons so employed:

Provided that when the Inspector is in doubt of the applicability to any factory or class of factories of any exemption sanctioned by the Local Government, he may, if he thinks fit, give permission in writing for the work to be carried on as proposed by the manager, until the case can be enquired into, but in no circumstances shall he grant such permission for a period of more than one month, on or before the expiry of which he exemption [illegible] issue an Exemption Order, or in the alternative, inform the manager that the [illegible] cannot be made with respect to his factory.

(2) Where under the provisions of section 30, women are exempted from the provisions of section 27, the total overtime permitted shall not exceed six hours during the week.

(3) Where under the provisions of sub-section (1) or sub-section (2) of section 30 any persons are exempted from the provisions of sections 27 and 28, the overtime permitted shall not be such as to make the number of hours of overtime exceed forty in each month.

(4) Where under the provisions of sub-section (2) of section 30, any factory has been exempted from the provisions of section 27, every person employed in such factory for more than sixty hours in any one week shall be paid, in respect of the overtime, at a rate which shall be at least one and a quarter times the rate at which he is normally paid.

(5) Nothing in rules 64 (2) to 64 (4) shall be deemed to prevent the prescribing of further conditions under section 30 of the Act.

65. Nothing in rules 61, 62, 64, 65 shall apply to persons employed in a confidential capacity or in positions which may be defined by the local Government to be positions of supervision or management:

Provided that no position held by a child shall be so defined, and that no occupation of a child shall be deemed to be of a confidential nature.

## PART VIII.—PUBLICATIONS, NOTICES, RETURNS AND REGISTERS.

66. Copies of the Act, rules, and abstracts can be obtained from the office of the Chief Inspector of Factories, Bengal, at the price for the time being in force

67 **Posting of abstracts and notices.**—In every factory there shall be posted near the main entrance, in a position approved by the Inspector, and protected from the effects of the weather by a glazed frame or other equivalent protection approved by the Inspector, the prescribed abstracts (Form F) of the Act and of these rules, in English and in the vernacular, together with a notice showing the standing orders of the factory on the following matters —

(a) the time of beginning and ending work on each day,
(b) the periods of rest fixed under section 21,
(c) the hours of beginning and ending work for each shift (if any),
(d) the hours of employment of all persons employed, and
(e) the weekly holidays fixed under section 22.

68 The abstracts and notice required under rule 67 shall at all times be maintained in a legible condition, and shall be kept up to date Any change which may be made in the notice shall be intimated by the manager to the Inspector within seven days.

69 A copy of the notice required under rule 67 shall be sent by the manager or occupier to the Inspector within one month of commencing work in a new factory.

70 The notice prescribed in section 33 (1) shall be sent by the occupier or manager of every seasonal factory on or before the date of commencing work for each season

71. **Accidents.**—When there occurs in any factory an accident to any person which results in—

(1) death, or
(2) such injury that there is probability of death resulting, or
(3) such injury that there is no reasonable prospect that he will be able to resume his employment within 20 days, or
(4) the permanent privation of a limb, or
(5) the permanent loss of sight or hearing;

such accident shall be recorded by the manager or occupier and reported by him within five hours of its occurrence to—

(a) the Inspector notified for this purpose, and
(b) the District Magistrate, or, if he by general order so directs, to the Subdivisional Officer.

All such accidents (unless fatal) shall be called in all prescribed communication "Serious accidents."

72. When there occurs in any factory an accident resulting in death, notice shall also be sent by the manager or occupier, within the said time, to the officer in charge of the police-station within the local limits of which the factory is situated.

73. When there occurs in any factory an accident to any person less serious than those described in rule 71, but which prevents or is likely to prevent the person from resuming his employment within 48 hours, such accident shall be recorded by the manager or occupier and reported by him as soon as practicable, but in any case within 60 hours of its occurrence, to the authorities mentioned in clauses (a) and (b) of rule 71 Such accidents shall be called in all communications "Slight accidents"

74. When reports of accidents under rules 71, 72 and 73 are sent by letter, either through the post or by special messenger, they shall be in Form E in the Schedule annexed to these rules, and when sent by telegraph or telephone they shall be confirmed by a written report in that form.

75. When an accident which has been reported to the Inspector as "slight" is afterwards known to be "serious" or "fatal" or when one reported as "serious" is afterwards known to be "slight" or "fatal," the manager shall make the necessary correction in a supplementary report which shall be sent to the authorities mentioned in clauses (*a*) and (*b*) of rule 71.

76. **Employment Register.**—In every factory, there shall be kept correctly and up-to-date a register, of which Parts I, II, III and IV shall be in Form G in the Schedule annexed to these rules, of all persons, whether male or female, adults or children, employed. Part I of the register shall include all men, Part II all women, Part III all male children, and Part IV all female children. Such register shall be called in all prescribed communications the "Employment Register."

77. When required by the Inspector there shall be added to the Employment Register in any factory or class of factories the following extra entries in respect of each or any of the persons employed :—

(*a*) Whether he is employed directly by the occupier (D) of the factory, or through a contractor (C).

(*b*) In the case of persons whose conditions of employment are contrary to sub-clauses (*a*), (*b*), (*c*), (*d*) or (*e*) of rule 61, the number of the Exemption Order authorizing such employment

78. In all factories wherein any of the processes mentioned in the Schedule of the Act are being carried on the Employment Register shall contain an additional section to be called Part V, in which shall be recorded the names and numbers of all persons engaged in such processes (Scheduled Workers), their periods of employment and such other information as the local Government may require by rules made under the Act.

79. **Children's Register.**—In every factory where children are employed, there shall be correctly kept an up-to-date and written afresh, from 1st January in each year, a Register of children in Form M in the Schedule attached to these rules.

80 **Tokens for workers.**—With the approval of the local Government, the Inspector may require that every person employed in any factory or class of factories while he is at work shall carry a token made of metal or other material approved by the Inspector and bearing the same number as that shown against his name in the Employment Register Such token shall be called in all prescribed communications as the person's "Employment Number Check." It shall be supplied free of cost by the manager of the factory, but a charge may be made for renewing it when lost, destroyed or defaced by its bearer.

81. **Space Register.**—The manager of every factory shall maintain a register showing the measurement and cubical contents of each room in the factory, the area of the floor-space in each room occupied by the machinery or other fixtures, and the area provided for ventilating openings.

82. **Limewashing and painting Register.**—The manager of every factory not exempted under rule 30 shall keep a register showing the dates on which the different parts of the factory are limewashed, painted or varnished

83 **Annual return.**—The annual return in Form L in the Schedule annexed to these rules prescribed by the Government of India by notification under section 38 shall be submitted in duplicate by managers or occupiers of factories to the Inspector on or before the 15th day of January in each year

84. **Notice of premises ceasing to be occupied as a factory.**—When any premises cease to be occupied as a factory, the manager or occupier shall give notice of the fact and of the date thereof to the Inspector, who shall, if satisfied that the Act is no longer applicable to such premises, exclude them from his register of factories.

85. **Exclusion of a factory from the Register.**—An Inspector may, without such notice from the manager or occupier as is prescribed in rule 84, of his own motion, at any time remove any factory from his register if satisfied that it has ceased to be a factory within the meaning of sub-section (*3*) of section 2, provided that no seasonal factory shall be so removed from the register on account of cessation of working if there is a probability of its resuming work within a reasonable time.

86. **Date of incomplete returns.**—The manager or occupier of every factory shall furnish to the Inspector, in addition to the returns specified in the Act or in these rules, any returns which may be prescribed from time to time by the Government of India or by the local Government. Returns made incompletely, incorrectly, or later than the prescribed date, are liable to be considered not to be returns in the meaning of the Act, and to render the manager or occupier who submits them liable to the penalty prescribed in section 41 (*j*), namely, Rs. 500.

**Form of appeal.**—A notice of appeal presented under section 50 shall be in the form or [illegible] setting forth concisely the ground of objection to the order and bearing a [illegible]

Court-fees Act, 1920, and shall be accompanied by a copy of the order appealed against and shall lie to the following authority, namely, to a Board consisting of—

(i) the Commissioner of the Division ;

(ii) the Civil Surgeon of the district ; and

(iii) a nominee for a year at a time of the Bengal Chamber of Commerce

Provided that, in either case, the appellate authority may, if requested by an appellant to apply the provisions of section 50, sub-section (3), hear the appeal with the aid of two assessors appointed by such authority

## PART IX—INSPECTORS AND INSPECTION

88. **Powers of inspectors.**—An Inspector may, together with such assistants, if any, as he may think fit to bring, enter any place within the area for which he is appointed, which is, or which he has reason to believe to be, used as a factory, and there make such examination of the premises, ways, works, machinery and plant, and of all registers or other prescribed records as may be necessary for the purposes of the Act, and he may take on the spot or otherwise such evidence of any persons as he may think necessary to examine.

89 In addition to the powers mentioned in rule 88, an Inspector may, subject to any restriction that may be notified by the Local Government with regard to him, exercise such other powers as may be necessary for carrying out the purposes of the Act

90 **Obstructing an inspector.**—The manager or occupier of a factory shall not obstruct or permit to be obstructed by any person in the factory an Inspector in the exercise of his duty, and shall not fail to produce on demand by an Inspector any registers or other documents prescribed by these rules, and shall not conceal, or prevent or attempt to prevent, any person employed in the factory from appearing before, or being examined by, an Inspector, and shall not withhold such information as the Inspector may require under these rules provided that no person in any factory shall be required to answer any question of, or to give any evidence to, an Inspector tending to criminate himself

91. **Duties of an inspector.**—The Inspector shall give to the manager or occupier of every factory within the local limits for which he is appointed such orders as may be required to bring the factory and the persons therein employed into complete conformity with the Act and these rules. Such orders shall be confirmed in writing

92 A Register of Factories compiled from information received on Form A shall be maintained by the Chief Inspector of Factories, and an extract giving details of factories for each district shall be sent on or before the 15th February of each year to the District Magistrates concerned All changes in the list which may be made in pursuance of rules 5, 6, 7, 84 and 87 shall also be intimated to the District Magistrate as and when such changes are made

93 Every Inspector subordinate to another Inspector shall furnish the latter with all such reports and information as may be necessary to him for the proper execution of his duties

94 **Responsibilities of inspectors.**—The Chief Inspector shall be primarily responsible for the administration of the Act in all areas of the province The extent of the responsibility of each other Inspector shall be in accordance with the powers conferred upon him as declared by notification under sub-section (5) of section 4. In order that he may satisfy himself that the provisions of the Act and of these rules are duly observed, an Inspector shall make such inspections of factories as may appear to be necessary to him, or to the authority to whom he is subordinate

95. The Inspector shall, at each inspection of a factory, satisfy himself that the provisions of the Act and of these rules relating to the health and safety of the persons employed therein are duly observed ; that the children employed in the factory have been duly certified and the prescribed register of children properly maintained ; that the hours of employment of all persons working in the factory are properly and continuously recorded in the prescribed register ; that the periodical stoppages of work and the prescribed holidays are granted ; that the prescribed limits of hours of work are not exceeded ; and that the prescribed abstracts and notice are duly maintained and fixed under section 36, and he shall note how far defects pointed out at previous inspections have been removed, and how far orders or recommendations previously issued have been complied with

96. The Inspector at each inspection shall enquire, sufficiently to ascertain where the responsibility for their occurrence rests, into all accidents which may have taken place since the last inspection, and shall pass such orders or recommendations as may be proper for the prevention of such accidents. The Inspector shall report all such enquiries made by him, and a copy of the report shall be sent to the manager or occupier of the factory concerned.

97. **Report of inspection.**—As soon as practicable after inspection the Inspector shall report upon such conditions of the factory as are contrary to the Act or rules or as may seem to him to require comment. A copy of such report shall be sent to the manager or occupier

98. Such extracts from the report of an Inspector made under rules 95, 96 and 97, as may be necessary for his information, shall be furnished to the District Magistrate by the Inspector, either directly, or through the Chief Inspector.

99. In the case of factories situated in places coming under the Municipal Act, if it appears that there has been a disregard of the provisions of any Municipal or other Local Act relating to sanitary arrangements, removal of objectionable rubbish, the cleaning and fencing of water tanks or the like matters, the Inspector shall, without prejudice to any action which he is empowered to take under the Act and rules, draw the attention of the Chairman of the Municipality or other local bodies to the breach of the sanitary regulations in question.

100. **Inspection by District Magistrate or additional Inspector.**—When in any area the District Magistrate or an additional Inspector exercising all or any of the powers of an Inspector makes an inspection, a copy of his note on the inspection shall be sent to the wholetime Inspector appointed for that area for such action as the latter may think necessary, as well as to the Manager if the Magistrate considers it desirable.

101. **Disuse of dangerous plant.**—Pending the execution of an order under rule 91 the Inspector may, when there is imminent danger to human life, prohibit the use of that part of the ways, works, machinery or plant to which the order relates.

102. **Inspector's records.**—Every Inspector shall keep a record of all orders and remarks made by him relating to each inspection.

103. **Inspector entitled to all relevant information.**—Any certificate, order, letter, report, or other document issued by an Inspector of Factories or other officer duly appointed in this behalf by the Government or by a Municipality or by other public body, with respect to the fitness or safety of the factory or any portion of its buildings, works, plant, machinery, apparatus, or ways, or with respect to the fitness of persons employed in the factory, shall be properly filed and exhibited by the manager or occupier to the Inspector on his demand

104. A request by the Inspector for information necessary to establish—

(*a*) the observance or otherwise of any provision of the Act,

(*b*) the execution or observance of any order of an Inspector, or

(*c*) the condition, age, or history of any part of the factory, its plant, machinery apparatus or ways, so far as such may be an indication of safety or danger in the use of such objects,

if made during an inspection shall be complied with forthwith by the manager or occupier if the information is available in the factory, and if made by letter, shall be complied with by the manager or occupier within seven days from the date of receipt, or as soon afterwards as the information can be obtained.

105. **Appeal against an order of an Inspector.**—Any person on whom an Inspector has served one or more of the following orders may, within 14 days from the receipt of such order or orders, appeal in the form prescribed in rule 87 to the Commissioner The appellate authority may confirm, modify or reverse the order or orders :—

(*a*) An order specifying the measures to be taken to remove conditions of danger which the Inspector considers to exist in contravention of rule 8, 9 or 10

(*b*) An order to provide fencing or its equivalent, which the Inspector considers to be required under rule 13, 14, 15, 16, 17, 18, or 19.

(*c*) An order specifying the means of escape which the Inspector considers should be provided in case of fire as required by section 16 of the Act.

(*d*) An order specifying the measures to be taken to avoid any injurious effect of gases, dust or other impurities which the Inspector considers to be required by rule 22.

(*e*) An order specifying measures for such purifications of water used for artificial humidification of the atmosphere as the Inspector considers to be required by rule 24.

(*f*) An order specifying measures for the attainment of the standard of lighting which the Inspector considers required by rule 12.

(*g*) An order prohibiting the presence in a factory or in any part of a factory of children whose age is less than that at which they may be legally employed in a factory, which the Inspector considers to be required under section 19A.

106. When an appeal against the order of an Inspector is presented under rule 105, the appellate authority may, and if so requested by the appellant in his petition of appeal shall, hear the appeal with the aid of two assessors.

107. When assessors are to be employed in the hearing of an appeal against the order of an Inspector, the appellate authority shall call upon the body which is considered most representative of the industry concerned to appoint one of the assessors within a period of 14 days. When such assessor has been so appointed, the appellate authority shall appoint the other assessor, and shall then fix the place, day and time for

hearing the appeal, of which due notice shall be given to the appellant and to the Inspector against whose order the appeal has been presented, and shall call upon the two assessors to appear and assist in the hearing of the appeal at the appointed place and time :

Provided that if no assessor is appointed by the aforesaid body within the prescribed period, or if the assessor so appointed fails to attend at the appointed time and place, the appeal may be heard without such assessor, or, if the appellate authority thinks fit, without the aid of any assessor, unless the appellant at whose request the assessor was appointed objects to the hearing of the appeal.

108. An assessor appointed under rule 107 shall receive a fee of Rs. 32 for assisting in the hearing of the appeal. Such fees and travelling expenses shall be paid by the local Government, except that in cases wherein the assessors have been appointed at the request of an appellant against whom the appeal is decided wholly or partly, the appellate authority may direct that the fees and travelling expenses shall be paid wholly or in part by such appellant.

109. **Suspension of orders while under Appeal.**—When an appeal is presented against the order of an Inspector, unless it is an appeal under clause (*g*) of rule 105, the appellate authority may, on the application of the appellant, suspend the operation of the order of the Inspector pending the decision of the appeal ; but where no such suspension has been granted, the Inspector's orders shall be complied with notwithstanding that the appeal against it has been presented.

## ANNEXURE

### To

## BENGAL FACTORIES RULES, 1923.

### PRESCRIBED FORMS.

| Form letter | Nature of Forms | Rule under which the Form is prescribed |
|---|---|---|
| A ... | Particulars of a factory ... ... | 6 and 7. |
| B ... | Inspector's Report ... ... | 97. |
| C ... | General Medical Certificate ... ... | 44. |
| D ... | Scheduled Worker's Medical Certificate ... | 44 |
| E ... | Report of an accident ... ... | 74 |
| F ... | Abstract of the Act and Rules ... | 67. |
| G ... | Employment Register ... ... | 76 |
| H ... | Application for Exemption order ... | 63. |
| K ... | Exemption order ... ... ... | 63. |
| L ... | Annual Return ... ... ... | 83. |
| M ... | Children's Register ... ... | 79 |

FORM A. SERIAL No.

## PARTICULARS OF A FACTORY.

(1) District

(2) Name of occupier

(3) Name of Manager

(4) Name of Factory

(5) Full postal address of Factory

(6) Class of Factory

*(7) Hours of starting and stopping work and rest intervals

(8) Are work days sometimes substituted for Sundays as weekly holidays?

(9) Maximum number of operatives simultaneously employed in any one day in the year (including persons employed through a contractor)—

Adults—

Men

Women

Children—

Boys

Girls

(10) Nature and amount of motive power used

---

(*To be filled in by Factory Inspection Department only.*)

(11) Exemption permissible under section 30 (*1*) from—

Section 21

Section 22

Section 27

Section 28

(12) Exemption orders granted—

Section 21—Date

Section 22—Date

Section 27—Date

Section 28—Date

REMARKS :—

* NOTE.—If system of shifts is worked, full particulars of working hours and rest intervals for adults and children to be stated separately

FORM B.

*It is requested that, in all future correspondence on this subject, the number, date and department may be quoted*
*Superscribe cover containing reply—*
**Chief Inspector of Factories, Bengal,**
*by designation and not by name*
*Telegram—Factories, Bengal*
*Telephone*—No 477, Regent

No

FROM THE FACTORY INSPECTION DEPARTMENT, BENGAL,

TO THE

*Date of inspection*

INDUSTRIES BUILDINGS,
40-1A, FREE SCHOOL STREET,

*Calcutta, the* *192*

**Indian Factories Act and Rules.**

SIR,

With reference to my recent inspection of your Factory, I have the honour to call your attention to the defects or irregularities mentioned below and to request you to take suitable measures to remedy them
**and to report to me when done.**

I have the honour to be,

SIR,

Your most obedient servant,

*Inspector of Factories, Bengal.*

DEFECTS OR IRREGULARITIES.

FORM C.

**GENERAL MEDICAL CERTIFICATE.**

Serial No.

*Date*

2 Name

3. Father's name

4 Sex and caste or religion

5 Residence

6 Age certified

7 Physical fitness

8 Distinctive marks

**Left thumb impression.**

*Examining Surgeon*

*Certifying Surgeon*

FORM C (*Buff paper.*)

**GENERAL MEDICAL CERTIFICATE.**

Serial No

*Date*

I HEREBY certify that I have personally examined (name)

son/daughter of (caste, etc)

residing at who is desirous of being employed in a factory and that his/her age as nearly as can be ascertained from my examination is years and that he/she is* for employment in a factory His/Her descriptive marks are

PROVISIONAL

**Left thumb impression.**

*Examining Surgeon*

*Certifying Surgeon.*

* The Certifying Surgeon shall write "Fit" or "Unfit" on the foil with his own hand

FORM D

**SCHEDULED WORKER'S MEDICAL CERTIFICATE.**

Serial No

*Date*

2 Name

3. Sex and caste or religion

4. Residence

5 Physical fitness

6 Distinctive marks

**Left thumb impression.**

*Examining Surgeon*

*Certifying Surgeon*

FORM D (*Blue paper*)

**SCHEDULED WORKER'S MEDICAL CERTIFICATE.**

Serial No

*Date*

I HEREBY certify that I have personally examined (name)

(caste, etc)

residing at who is desirous of being employed as in the Factory and that his/her age as nearly as can be ascertained from my examination is years and that he/she is* for employment at work involving the use of lead compounds. His/Her descriptive marks are

PROVISIONAL.

**Left thumb impression.**

*Examining Surgeon*

*Certifying Surgeon*

* The Certifying Surgeon shall write "Fit" or "Unfit" on the foil with his own hand.

FORM E.

## REPORT OF ACCIDENT.

To

*Date*

SIR,

I hereby give notice under section 31 of the Indian Factories Act, that a serious / fatal / slight accident occurred in this Factory to the person mentioned below.—

Name Caste

Sex Age

(1) Exact date and hour of accident

(2) Nature of injury, giving medical diagnosis if possible

(3) Number of days injured person is likely to be off work

(4) Full account of accident and circumstances surrounding same

(5) Was accident due to injured person's negligence or to that of any other person If so, whose

(6) Names of persons who saw the accident and can give important evidence

(7) If accident caused by machinery, give full details of machine and part of machine causing accident

*Name of Factory* Signed

*Postal address* *Manager.*

NOTE.—Any additional information which the manager may wish to give, in order [illegible] inspector may have clear idea of the circumstances surrounding the accident, should be attached to the [illegible]

**(For use of Factory Inspection Department only.)**

Date of enquiry

Result of enquiry

*Inspector of Factor*

FORM G.

**EMPLOYMENT REGISTER UNDER RULE 76 OF THE BENGAL FACTORIES RULES**

HOURS OF WORK — Monday to Friday { Period 1, Period 2 } Saturday { Period 1, Period 2 } Sunday { Period 1, Period 2 }

*Attendance Register for Department*

| 1 | 2 | 3 | 4 | 5 | 6 | 7 | | 8 | | 9 | | 10 | | 11 | | 12 | | 13 | | 14 | 15 | 16 |
|---|---|---|---|---|---|---|---|---|---|---|---|---|---|---|---|---|---|---|---|---|---|---|
| Serial No. | Name | Certificate No | Father's name | Caste or religion | Nature of work | Monday | | Tuesday | | Wednesday | | Thursday | | Friday | | Saturday | | Sunday | | Total weekly hours. | Rate | Bonus |
| | | | | | | 1 | 2 | 1 | 2 | 1 | 2 | 1 | 2 | 1 | 2 | 1 | 2 | 1 | 2 | | Rs A. P | Rs. A P. |
| | | | | | | | | | | | | | | | | | | | | | | |
| | | | | | | | | | | | | | | | | | | | | | | |
| | | | | | | | | | | | | | | | | | | | | | | |
| | | | | | | | | | | | | | | | | | | | | | | |
| | | | | | | | | | | | | | | | | | | | | | | |
| | | | | | | | | | | | | | | | | | | | | | | |

Columns 1 to 14 required for information under the Act.
Columns 3 and 4 required in Children's Register but not in Register for adults.
Columns 15, 16 and 17 may be added to or altered to suit requirements of owners.

FORM H.

**APPLICATION FOR EXEMPTION ORDER UNDER THE INDIAN FACTORIES ACT.**

I, , Manager of beg here to apply for exemption from the undernoted provisions of the Act

*Manager.*

2. Exemption is required from the observance of –

(*a*) Periods of rest (section 21)

(*b*) Sunday as a holiday (section 22)

(*c*) A working week of 60 hours (section 27)

(*d*) A working day of 11 hours (section 28)

3. State—

(*a*) If any class of work in the factory is in the nature of preparatory or comp mentary work which must be carried on outside the limits laid down for t general working of the Factory If so, state the class or classes

(*b*) If the work of any class of workers is essentially intermittent If so, state t class or classes

(*c*) If work necessitates continuous production for technical reasons

(*d*) If work necessitates continuous process for a working day for techni reasons

(*e*) If the Factory supplies the public with articles of prime necessity which m be made or supplied every day If so, what articles ?

(*f*) If the Factory cannot carry on its work, except as stated seasons, or at tin dependent on the irregular action of natural forces If so, state gene conditions under which work can be carried on

4. State—

(*a*) Class of workers for which exemption is requested

(*b*) If no particular class, state the number of men and number of women whom exemption is requested —

Men

Women

5. State on what day a holiday will be given if exemption is granted section 22

*(Buff Paper.)*

*Exemption order No.*

FORM K (1)

**EXEMPTION ORDER.**

FROM THE FACTORY INSPECTION DEPARTMENT, BENGAL,

TO THE

INDUSTRIES BUILDING,

40-1A, FREE SCHOOL STREET,

*Calcutta, the* *192*

**Indian Factories Act and Rules.**

SIR,

I have the honour to inform you that you have been granted exemption, a noted below, under sections 21 and 22, for the following reason .—

You are required under rule 77 (*b*) to state in the remarks column of your employment register, opposite the name of each person to whom this exemption applies, th number of this exemption order.

I have the honour to be,

SIR,

Your most obedient servant,

*Chief Inspector of Factories, Bengal and Assam.*

Exemption under section 21 granted in respect of

Exemption under section 22 granted in respect of

(*Blue paper.*)

*Exemption order No.*

FORM K (2).

**EXEMPTION ORDER.**

FROM THE FACTORY INSPECTION DEPARTMENT, BENGAL

TO THE

INDUSTRIES BUILDING,

10-1A, FREE SCHOOL STREET,

*Calcutta, the* *192*

**Indian Factories Act and Rules.**

SIR,

I have the honour to inform you that you have been granted exemption, as noted below, under sections 27 and 28, for the following reason - -

You are required under rule 77(*b*) to state in the remarks column of your employment register, opposite the name of each person to whom this exemption applies, the number of this exemption order.

I have the honour to be,

SIR,

Your most obedient servant,

*Chief Inspector of Factories, Bengal.*

---

Exemption under section 27 granted in respect of

Exemption under section 28 granted in respect of

.M L.

## ANNUAL RETURN.

*ne of Factory* *Name of Occupier* *Name of Manager*

| TRICT | Place | Class of Factory | Average hours worked per week * | | | Average number of operatives employed daily. | | | | Are intervals given under section 21 (1) (a) (i) or under section 21 (1) (a) (ii)? | Are intervals given to children? | Are work days sometimes substituted for Sundays as weekly holidays? | Is the factory exempted from the provisions of sections | | | | R |
|---|---|---|---|---|---|---|---|---|---|---|---|---|---|---|---|---|---|
| | | | Men | Women | Children | Men | Women | Boys | Girls | | | | 21? | 22? | 27? | 28? | |
| 1 | 2 | 3 | 4 | 5 | 6 | 7 | 8 | 9 | 10 | 11 | 12 | 13 | 14 | 15 | 16 | 17 | |

NOTE.—The average hours of work entered should be the average nominal hours of work per week, *i.e.*, the weekly average of the hours respectively t women and children in the Factory.

---

FORM M.

## CHILDREN'S REGISTER.

| Serial No | Name | Certificate No | Date admitted. | Transferred to— |
|---|---|---|---|---|
| | | | | |

*No. 2848Com.—The 25th June 1923.*—In supersession of the orders contained in notification No. 2565Com., dated the 6th June 1923, Mr D. B. Mann, Inspector of Factories, Bengal, is allowed leave for twelve months, viz., leave on average pay for one month and three days, under proviso to article 81 (*b*) (*ii*) of the Fundamental Rules, and leave on half average pay for the remaining period under article 81 (*d*) of those rules, with effect from the 15th June 1923.

*No. 3030Com.—The 2nd July 1923.*—Mr. J. N. Gupta, M. B E., I.C S, Commissioner of the Burdwan Division, is appointed to be the Chairman of the Mining Board, Bengal, constituted under section 9 (*l*) of the Indian Mines Act, 1901 (VIII of 1901), *vice* Mr A W. Cook, C I.E., I C.S., resigned.

A. MARR,
*Secretary to the Government of Bengal*

## IRRIGATION DEPARTMENT.

### ESTABLISHMENT.

### NOTIFICATIONS.

*No. 52.—The 29th June 1923*—Babu Hari Sadhan Ganguli, Assistant Engineer Khulna Division, is granted, under rule 81 (*b*) (*ii*) of the Fundamental Rules, leave on average pay for one month (the entire period on account of privilege leave at his credit) with effect from the 27th May, or such subsequent date as he may avail himself of it

[Third publication.]

*No. 21.—The 19th June 1923*—The following draft of amendments, which, in exercise of the powers conferred by sections 6 and 11 of the Canals Act, 1864 (Bengal Act V of 1864), the Governor in Council intends to make in the rules and schedules of rates of tolls (published in Bengal Government notification No 5, dated the 19th June 1917, in Part I of the *Calcutta Gazette* of the 20th *idem*) for the Midnapore Canal with branch to Naraingar, is hereby published for the information of persons likely to be affected thereby

II. The draft will be taken into consideration on or after the 5th August 1923, and any objections or suggestions received by the undersigned before that date will be duly considered .—

*Draft amendments*

1 For clause (*c*) of rule 2 of the said rules, *substitute* the following, namely :—

"The maundage on which the amount of toll is calculated shall be reckoned to the nearest integral multiple of 12½ maunds, any remainder of less than 12 maunds being rejected. In the case of boats exceeding 500 maunds by measurement, the maundage shall be reckoned to the nearest integral multiple of 50 maunds rejecting any remainder of less than 50 maunds."

2. In rule 7 of the said rules for the words "one rupee" *substitute* the words "two rupees per ticket."

3. In rule 8 of the said rules—

(*i*) for the words and figures "eight annas per 100 maunds" *substitute* the words and figures "one rupee per 100 maunds"

(*ii*) for the words "one anna per timber per day" *substitute* the words "two annas per timber per day."

(*iii*) for the words and figures "two annas per 100 per day" *substitute* the words and figures "four annas per 100 per day."

(*iv*) for the words and figures "eight annas per 100 per day" *substitute* the words and figures "one rupee per 100 per day."

4. In rule 12 of the said rules for the words and figures "four annas per 100 maunds" *substitute* the words and figures "eight annas per 100 maunds"

5 For the schedules of rates of tolls to be charged on the Midnapore Canal and on the Naraingar Distributary, mentioned at the end of the said rules, *substitute* the following, namely :—

**Schedule of rates of tolls to be charged on the Midnapore Canal and the Naraingar Distributary.**

*Entering from both the East and West*

| Description | Range I, 7 miles, Ghatera to Banstala | | Range II, 3 miles, Bansdeula to Kantapukur | | Range III 11 miles Daman to Panskura | | Range IV, 11 miles Panskura to Bali | | Range V, 13 miles, Balichak to Mohanpur | | Range V, 9 miles, Balichak to Krishnagar. | | | Range IV, 4 miles, Krishnagar to Mohanpore | | | Naraingar Distributary. Entering distributary from canal or *vice* | |
|---|---|---|---|---|---|---|---|---|---|---|---|---|---|---|---|---|---|---|
| | Rs | A | Rs | A | Rs | A | Rs | A | Rs | A | Rs | A. | P. | Rs | A. | P | Rs. | A. |
| Loaded vessels per hundred maunds. | 0 | 8 | 0 | 4 | 0 | 12 | 0 | 12 | 0 | 14 | 0 | 10 | 0 | 0 | 4 | 0 | 0 | 12 |
| Empty vessels per hundred maunds | 0 | 4 | 0 | 2 | | | | | | | 0 | 5 | 0 | 0 | 2 | 0 | | |
| Timber in rafts or loose per timber | 0 | 2 | 0 | 2 | | | | | | 2 | 0 | | | 0 | 0 | 6 | | |
| Piles in rafts or loose per hundred piles | 1 | 0 | 1 | 0 | | | | | | | | | | 0 | 4 | 0 | | |
| Bamboos in floats per hundred | 0 | 4 | 0 | 4 | | | | | | | 0 | 3 | 0 | 0 | 1 | 0 | | |

NOTE.—Vessels which enter the canal at Kantapukur lock and do not proceed beyond 900 feet from that lock will be charged toll at the rate of two annas per 100 maunds, whether loaded or empty. Tolls will be realized at Ghatera, Bansdeula, Kantapukur, Daman, Panskura, Balichak and Krishnagar toll stations.

*No. 31.—The 19th June 1923.*—The following draft of amendments, which, in exercise of the powers conferred by sections 6 and 11 of the Canals Act, 1864 (Bengal Act V of 1864), the Governor in Council intends to make in the revised rules and revised schedules of rates of tolls (published in Bengal Government notification No. 8, dated the 25th May 1915, in Part I of the *Calcutta Gazette* of the 26th *idem*) for the High Tidal Canal and the portion of the Orissa Coast Canal lying in Bengal, is hereby published for the information of persons likely to be affected thereby.

II The draft will be taken into consideration on or after the 5th August 1923, and any objections or suggestions received by the undersigned before that date will be considered.

*Draft amendments*

1. For clause (*c*) of rule 2 of the said rules, *substitute* the following, namely :—

"The maundage on which the amount of toll is calculated shall be reckoned to the nearest integral multiple of 12½ maunds, any remainder of less than 12½ maunds being rejected. In the case of boats exceeding 500 maunds by measurement, the maundage shall be reckoned to the nearest integral multiple of 50 maunds, rejecting any remainder of less than 50 maunds."

2 In rule 7 of the said rules for the words "one rupee" *substitute* the words "one rupee and eight annas per ticket".

3. In rule 8 of the said rules—

(*i*) for the words and figures "8 annas per 100 maunds" *substitute* the words and figures "12 annas per 100 maunds".

(*ii*) for the words "one anna per timber per day" *substitute* the words "one anna and six pies per timber per day"

(*iii*) for the words and figures "Two annas per 100 per day" *substitute* the words and figures "Three annas per 100 per day."

(*iv*) for the words and figures "Eight annas per 100 per day" *substitute* the words and figures "Twelve annas per 100 per day."

4. In rule 12 of the said rules for the words and figures "four annas per 100 maunds" *substitute* the words and figures "eight annas per 100 maunds".

5. For the three schedules of rates of tolls mentioned at the end of the said rules, *substitute* the following, namely :—

**Schedule of rates of tolls for local traffic to be charged on the Hijili Tidal Canal and the portion of the Orissa Coast Canal, Range III, lying within Bengal.**

| Description | HIJILI TID | | ORISSA COAST CANAL | | | |
|---|---|---|---|---|---|---|
| | Gewankhali lock to Etamagra and *vice versa* | Tarapakia lock to Kalinagar lock and *vice versa.* | Bhaltagar lock to Mosagaon and *vice versa* | Mosagaon to Contai and *vice versa* | Mosagaon to Pichaboni and *vice versa* | Pichaboni to Mirgoda and *vice versa.* |
| | Range I | Range II | Range III | | | |
| | 11 miles | | 9 miles | 7 miles | 7 miles | 11 miles. |
| | Rs A | Rs A | Rs. A | Rs A | Rs A | Rs. A. |
| Vessels loaded per 100 maunds | 1 0 | 1 12 | 0 10 | 0 8 | 0 8 | 0 12 |
| Vessels empty per 100 maunds | 0 8 | 0 14 | 0 5 | 0 4 | 0 4 | 0 6 |
| Timber in rafts or loose per timber | 0 2 | 0 3 | 0 2 | 0 2 | 0 2 | 0 2 |
| Bamboos in floats or loose per 100 bamboos. | 0 4 | 0 6 | 0 4 | 0 4 | 0 4 | 0 4 |

NOTE.—Tolls will be charged at Gewankhali, Etamagra, Terapakia and Kalinagar on the Hijili Tidal Canal and at Bhaltgar, Mosagaon and Pichaboni toll stations on the Orissa Coast Canal.

**Schedule of rates of tolls for through traffic to be charged on the Hijili Tidal Canal and the portion of the Orissa Coast Canal, Range III, lying within Bengal.**

| From— | | LOADED VESSELS PER 100 MAUNDS | | | EMPTY VESSELS PER 100 MAUNDS | | |
|---|---|---|---|---|---|---|---|
| | | Hijili Tidal Canal | Orissa Coast Canal | Total | Hijili Tidal Canal | Orissa Coast Canal | Total |
| | | Rs A | Rs A | Rs A | Rs A | Rs A | Rs A |
| Gewankhali | Kalinagar and *vice versa* ... | 2 8 | | 2 8 | 1 4 | | 1 4 |
| Ditto | Mosagaon and *vice versa* . | 2 8 | 0 8 | 3 0 | 1 4 | 0 4 | 1 8 |
| Ditto | Pichaboni and *vice versa*... | 2 8 | 1 0 | 3 8 | 1 4 | 0 8 | 1 12 |
| Ditto | Mirgoda and *vice versa* ... | 2 8 | 1 10 | 4 2 | 1 4 | 1 2 | 2 6 |
| Ditto | Contai and *vice versa* ... | 2 8 | 1 0 | 3 8 | 1 4 | 0 8 | 1 12 |
| Ditto | Baliaghye or Karikapatna and *vice versa* | 2 8 | 0 12 | 3 4 | 1 4 | 0 6 | 1 10 |

NOTE.—Tolls will be charged at Gewankhali, Etamagra, Terapakia and Kalinagar on the Hijili Tidal Canal and Bhaltgar, Surpal, Mosagaon and Pichaboni toll stations on the Orissa Coast Canal.

**Schedule of rates of tolls for local traffic to be charged on the Pass khals and Baliaghye drain.**

| Description. | Terapakia Pass khal from Terapakia lock to Bamberia and *vice versa* | Palaboni Pass khal from its junction with Terapakia khal at Anandapur to its junction with the Sadar khal and *vice versa* | Baliaghye drain from Surpal to karikapatna and Baliaghye and *vice versa.* |
|---|---|---|---|
| | 10 miles | 10 miles | 11 miles |
| | Rs A | Rs A | Rs A |
| Loaded vessels per 100 maunds ... | 1 0 | 1 0 | 1 0 |
| Empty vessels per 100 maunds ... | 0 8 | 0 8 | 0 8 |
| Timbers in rafts or loose per timber ... | 0 2 | 0 2 | 0 2 |
| Bamboos in floats or loose per 100 bamboos. | 0 4 | 0 4 | 0 4 |

NOTE.—Tolls will be charged at Terapakia and Surpal.

G. T. HUNTINGFORD,
*Secretary to the Government of Bengal (off.).*

ESTABLISHMENT.

*No. 51.—The 25th June 1923.*—Babu Samarendra Bhattacharji, Upper Subordinate, is transferred in the interests of the public service from the Cossye to the Canals Division.

G. T. HUNTINGFORD,
*Chief Engineer, Bengal (offg.).*

## DEPARTMENT OF AGRICULTURE AND INDUSTRIES.

EXCISE.

NOTIFICATION.

**Minister in charge: The Hon'ble Nawab Saiyid Nawab Ali Chaudhuri, Khan Bahadur, C.I.E.**

*No 2316.—The 2nd July 1923.*—In exercise of the powers conferred by clause (*b*) of sub-section (*2*) of section 7 of the Bengal Excise Act, 1909 (Bengal Act V of 1909), read with section 22 of the Bengal General Clauses Act, 1899 (Bengal Act I of 1899), the Government of Bengal (Ministry of Agriculture and Public Works) are pleased to direct that the following amendment be made in Notification No. 5968.R., dated the 30th March 1915, published on pages 562—578, Part I of the *Calcutta Gazette* of the 31st *idem*, as subsequently amended, namely —

*Delete* clause (*b*) of paragraph 8 of the said Notification.

J T DONOVAN,
*Secretary to the Government of Bengal (offg).*

### Orders by the Director of Agriculture, Bengal.

*No. 8419 —The 26th June 1923.*—Babu Jogesh Chandra Roy, District Agricultural Officer, Dinajpur, is granted, under rule 81 (*b*) (*ii*) of the Fundamental Rules, leave on average pay for six days (the entire period on account of privilege leave at his credit), in extension of the leave already sanctioned under this department notification No. 7219, dated the 5th June 1923.

*No. 8438 —The 26th June 1923.*—This department notification No. 6815, dated the 25th May 1923, sanctioning leave on average pay for one month to Maulvi Fakrul Islam, District Agricultural Officer, Feni, is cancelled

*No. 8441.—The 26th June 1923 —*Babu Amrita Lal Shome, District Agricultural Officer, Kishoreganj, is allowed leave on average salary for three weeks, under rule 81 (*b*) (*ii*) of the Fundamental Rules, in extension of the leave sanctioned in this office notification No 4948, dated the 10th April 1923.

R. S. FINLOW,
*Director of Agriculture, Bengal (offg.)*

### Orders by the Commissioner of Excise and Salt, Bengal.

*No 5Exc.—The 27th June 1923 —*Babu Satis Chandra Chaki, Inspector of Excise and Salt, on deputation to Naugaon for eight months from the 1st November 1922, is posted to Rajshahi Sadar, on the expiry of his period of deputation.

*No. 6Exc.—The 28th June 1923.*—Maulvi Syed Ahmad Rasul, Inspector of Excise and Salt, Excise Intelligence Bureau, is granted leave on average pay for twenty days from the date on which he avails himself of the leave.

S. C. MUKERJEE,
*Commissioner of Excise and Salt, Bengal.*

## REVENUE DEPARTMENT.

### LAND REVENUE.

### NOTIFICATIONS.

*No. 961T.R.—The 23rd June 1923.*—In exercise of the power conferred by clause (*m*) of section 138 of the Bengal Local Self-Government Act of 1885 (Bengal Act III of 1885), the Governor in Council is pleased to make the following amendment in the rules published with notification No. 3334 L.S.-G., dated the 20th December 1901, namely :—

**Darjeeling.**

To rule 56 of the said rules *add* the following proviso, namely —

"Provided that in the case of the District Board of Darjeeling the procedure prescribed by this rule shall not apply to the repair of District or Local Board roads by honorary contractors, in which case the District Engineer shall, after inspection of such roads, give a completion certificate that the allotment for the purpose has been spent to the best advantage, if he is so satisfied, and it must be countersigned by the Chairman of the District Board."

*No. 964T.R.—The 25th June 1923.*—It is hereby notified for general information that the Director of Land Records, Bengal, to whom the control of survey operations in this Province has been entrusted, will, in future, be designated Director of Land Records and Surveys, Bengal, and will exercise all the powers hitherto vested in and exercised by the Director of Surveys, Bengal

*No. 965T R—The 25th June 1923.*—In exercise of the power conferred by clause (*c*) of section 139 of the Code of Civil Procedure, 1908 (Act V of 1908), the Governor in Council is pleased to empower the Certificate Officers in districts where the Bengal Village Self-Government Act, 1919 (Bengal Act V of 1919), has been introduced to appoint the Presidents and Vice-Presidents of Union Boards to be officers who may administer oaths to daffadars or chaukidars on any affidavit made by them under the said Code in serving processes in certificate cases

*No 4599 L R—The 25th June 1923.*—In exercise of the powers conferred by section 108A of the Bengal Tenancy Act, 1885 (Act VIII of 1885), the Governor in Council is pleased to empower Maulvi Ali Azam Assistant Settlement Officer of Nadia, to make corrections in the records-of-rights prepared in respect of the lands in the districts of Nadia, Murshidabad, Burdwan, Hooghly and the 24-Parganas, in accordance with, and subject to, the provisions of the said section

**Nadia.**
**Murshidabad.**
**Burdwan.**
**Hooghly.**
**24-Parganas.**

*No. 4627L R.—The 26th June 1923.*—Babu Prabhat Chandra Sen, Sub-Deputy Collector, Munshiganj, Dacca, is appointed to be an Assistant Settlement Officer in the districts of Bankura and Burdwan, with effect from the date on which he joins his settlement duties in those districts.

**Dacca.**
**Bankura.**
**Burdwan.**

*No. 4628L R.—The 26th June 1923.*—Under the provisions of section 3 (*17*) of the Bengal Tenancy Act, 1885 (Act VIII of 1885), Babu Prabhat Chandra Sen, Sub-Deputy Collector, is authorised to discharge, in the district of Bankura, and in the area comprised in the Asansol subdivision of the district of Burdwan, the functions of a Revenue Officer, under Chapter X of that Act, so far as they relate to surveys and the preparation of records-of-rights.

**Bankura.**
**Burdwan.**

He is also vested with the powers of an Assistant Settlement Officer under Chapter VI, Part I of the rules under the Bengal Tenancy Act, in respect of the aforesaid areas.

*No. 4748L.R.—The 29th June 1923.*—Babu Anath Bandhu Ray, Sub-Deputy Collector, employed as an Assistant Settlement Officer, in the district of Jessore, is also appointed to be an Assistant Settlement Officer, in the district of Faridpur, with effect from the date on which he joins his settlement duties in that district.

**Jessore.**
**Faridpur.**

*No. 4749L.R.—The 29th June 1923.*—Under the provisions of section 3 (*17*) of the Bengal Tenancy Act, 1885 (Act VIII of 1885), Babu Anath Bandhu Ray, Sub-Deputy Collector, employed as an Assistant Settlement Officer in the districts of Jessore and Faridpur, is authorised to discharge, in the district of Faridpur, the functions of a Revenue Officer, under Chapter X of that Act, so far as they relate to surveys and the preparation of records-of-rights.

**Jessore.**
**Faridpur.**

He is also vested with the powers of an Assistant Settlement Officer under Chapter VI, Part I of the rules under the Bengal Tenancy Act, in respect of the aforesaid area.

M. C. MCALPIN,
*Secretary to the Government of Bengal.*

## LAND ACQUISITION.

**24-Parganas.**

*No 4614L.A —The 26th June 1923.*—In exercise of the power conferred by section 48 (*1*) of the Land Acquisition Act, I of 1894, the Governor in Council is pleased to withdraw from the acquisition of a piece of land measuring, more or less, 1·2231 acres, bounded as described below, which was notified for acquisition under declaration No 1511L A , dated the 25th February 1921, published at page 357, Part I of the *Calcutta Gazette* of the 2nd March 1921, and required for further extension of the new Police Hospital at Bhowanipore, in the village of Bhowanipore, pargana Dihi Panchannagram, zilla 24-Parganas

*Boundaries*

*North*—By Sambhu Nath Pandit Street
*East*—By the remaining land of O C Ganguly and new Police Hospital land.
*South and West*—By the new Police Hospital land.

**Murshidabad.**

*No. 4617L.A —The 26th June 1923* —Mr Rakhal Chandra Sen, I.C.S., Subdivisional Officer of Lalbagh, in the district of Murshidabad, is vested with the powers of a Collector under the Land Acquisition Act, I of 894, in that subdivision.

**Tippera.**

*No. 4880L.A.—The 2nd July 1923.*—In exercise of the powers conferred by section 48 (*1*) of the Land Acquisition Act, I of 1894, the Governor in Council is pleased to withdraw from the acquisition of the piece of land measuring, more or less, 15 cottahs and 2 chitaks of standard measurement equivalent, to 0·25 of an acre, which was notified for acquisition under declaration No 4343L A , dated the 12th April 1922, published at pages 765-66, Part I of the *Calcutta Gazette* of the 19th idem, in respect of the acquisition of land required by the Chandpur Municipality for the extension of the road from the Roy's road to the river Dakatia, in village Sriramdi, pargana Purchandi, district Tippera

M C. McALPIN,
*Secretary to the Government of Bengal*

## DECLARATION.

**Midnapore.**

*No. 4755L.A.—The 29th June 1923* —Whereas it appears to the Governor in Council that land is required to be taken by Government at the public expense for a public purpose, viz, for constructing a retired line in the 27th and 28th miles of Doro Embankment Schedule D. No. 53, in the villages of Chaitanya Mishrir chak, Radhakanto chak, Bishnuram chak and Sandiar chak, pargana Doro Dubnan, zilla Midnapore, it is hereby declared that for the above purpose a stretch of land (in two blocks) measuring, more or less, 10·38 acres, bounded on the—

### BLOCK A :

*North*—By portions of petty settlement plots Nos 76, 16, 18, 13 and 11 and by portions of district settlement plots Nos 3, 2, 1 and 8 of mauza Chaitanya Mishrir chak, 20, 55, 56, 60, 61, 72, 96, 95, 117, 118, 114, 121, 120, 124, 129, 127, 224, 88, 148, 149, 172, 160 and 161 of mauza Radhakanta chak, 569, 352, 356, 357, 522, 518, 512, 510, 490, 503, 419, 242, 422, 424, 427, 432, 435, 434, 442 and 443 of mauza Bishnuram chak,
*East*—By lands of block B,
*South*—By portions of petty settlement plots Nos 59, 16, 18, 19, 15 and 11 and by portions of district settlement plots Nos. 3, 2, 1, 8 and 20 of mauza Chaitanya Mishrir chak, 56, 60, 61, 72, 97, 96, 95, 72; 116, 114, 122, 123, 124, 130, 224, 148, 172, 171, 160, 163, 161 and 162 of mauza Radhakanta chak, 352, 354, 356, 524, 522, 511, 510, 503, 501, 500, 490, 419, 565, 422, 424, 427, 428, 431, 435, 434, 442 and 443 of mauza Bishnuram chak,
*West*—By Public Works Department embankment,

### BLOCK B

*North*—By portions of district settlement plots Nos. 444, 447, 448, 453, 454, 455, 458, 467, 464, 463, 462 473, 574 and 586 of mauza Bishnuram chak, 106 and 102 of mauza Sandiar chak,
*East*—By Public Works Department embankment,
*South*—By portions of district settlement plots Nos. 444, 447, 448, 453, 454, 455, 458, 467, 464, 463, 462, 473, 574 and 586 of mauza Bishnuram chak, 106 and 102 of mauza Sandiar chak,
*West*—By lands of block A,

is required within the aforesaid villages of Chaitanya Mishrir chak, Radhakanta chak, Bishnuram chak and Sandiar chak.

This declaration is made, under the provisions of section 6 of Act I of 1894, to all whom it may concern.

A plan of the land may be inspected in the office of the Land Acquisition Collector of Tamluk.

M. C. MCALPIN,
*Secretary to the Government of Bengal*

DECLARATION.

*No. 4752L.A.—The 29th June 1923.*—Whereas it appears to the Governor in Council that land is required to be taken by Government at the expense of the Cossipore-Chitpore Municipality for a public purpose, viz., for widening Nilmoni Mitter Street, in the village of Tallah, pargana Dihi Panchannogram, zilla 24-Parganas, it is hereby declared that for the above purpose four pieces of land altogether measuring, more or less, 0·1080 of an acre, bounded on the—

24-Parganas.

PLOT NO. 1:

*North*—By the lands of Charu Chandra Bhattacharjee, Phani Bhusan Mukerji, Kadambini Dasi and Nilmoni Mitter Street,
*East and South*—By Nilmoni Mitter Street,
*West*—By the lands of Charu Chandra Bhattacharjee, Phani Bhusan Mukerji and Kadambini Dasi,

PLOT NO. 2.

*North and West*—By drain of Nilmoni Mitter Street,
*East*—By the land of Surat Lal Mitter,
*South*—By the land of Surat Lal Mitter and the municipal drain,

PLOT NO 3:

*North and West*—By the land of Kebal Krishna Sur,
*South and East*—By the drain of Nilmoni Mitter Street,

PLOT NO. 4

*North*—By the land of Panna Lal Sirkar and Nilmoni Mitter Street,
*East*—By the land of Panna Lal Sirkar,
*South and West*—By Nilmoni Mitter Street,

are required within the aforesaid village of Tallah.

This declaration is made, under the provisions of section 6 of Act I of 1894, to all whom it may concern.

A plan of the land may be inspected in the office of the Commissioners of the Cossipore-Chitpore Municipality.

M. C. MCALPIN,
*Secretary to the Government of Bengal.*

DECLARATION.

*No. 4800L A.—The 30th June 1923.*—Whereas it appears to the Governor in Council that extra land is required to be taken by Government at the expense of the Bengal-Nagpur Railway Company, Limited, for a public purpose, viz, for a new settlement at Kharagpur, in the village of Kharagpur khas jungle, locally known as Mathurakati khas jungle and Teutichati khas jungle, pargana Kharagpur, zilla Midnapore, it is hereby declared that for the above purpose a piece of land measuring, more or less, 85·39 acres, lying within the area bordered with red colour in the plan and bounded on the—

Midnapore.

*North*—By Bengal-Nagpur Railway line,

*East*—By Wagon Yard of Bengal-Nagpur Railway Company, Limited,

*South*—By remaining portion of settlement plots Nos. 51, 70, 71, 72 and 73 of Mathurakati khas jungle and Nos. 219, 220, 222, 229, 228, 227 and 247 of Teutichati khas jungle,

*West*—By village settlement of Bengal-Nagpur Railway Company, Limited, (from which settlement plots Nos. 49, 51, 87 and 79 of Mathurakati khas jungle being in khas possession of Government are excluded),

is required within the aforesaid village of Kharagpur khas jungle, locally known as Mathurakati khas jungle and Teutichati khas jungle.

This declaration is made, under the provisions of section 6 of Act I of 1894, to all whom it may concern.

A plan of the land may be inspected in the office of the Collector of Midnapore.

M. C. MCALPIN,
*Secretary to the Government of Bengal.*

## DECLARATION.

**Dacca.**

*No. 4868L.A.—The 2nd July 1923.*—Whereas it appears to the Governor in Council that land is required to be taken by Government at the expense of the Dacca District Board for a public purpose, viz., for a reserved tank at Latabdi, in the village of Latabdi, pargana Rasulpur, zilla Dacca, it is hereby declared that for the above purpose a piece of land measuring, more or less, 1·768 acres, bounded on the—

*North*—By the remaining portion of the cadastral survey plot No. 424,

*East*—By the cadastral survey plots Nos. 426, 757 and remaining portion of the cadastral survey plot No. 753,

*South*—By the cadastral survey plot No. 750 and remaining portion of the cadastral survey plot No. 755,

*West*—By the remaining portions of the cadastral survey plots Nos. 424, 425 and 755,

is required within the aforesaid village of Latabdi.

This declaration is made, under the provisions of section 6 of Act I of 1894, to all whom it may concern.

A plan of the land may be inspected in the office of the Subdivisional Officer of Munshiganj.

M. C. MCALPIN,
*Secretary to the Government of Bengal.*

## DECLARATION.

**Hooghly.**

*No. 4871L.A.—The 2nd July 1923.*—Whereas it appears to the Governor in Council that land is required to be taken by Government at the expense of the Bansberia Municipality for a public purpose, viz., for widening Bidya Bhusan's Ghat Road, in the village of Tribeni, pargana Boro, zilla Hooghly, it is hereby declared that for the above purpose a piece of land measuring, more or less, 8½ chitaks of standard measurement, equivalent to ·0088 of an acre, bounded on the—

*North*—By Ashima Shundari Debi's garden and her private lane,

*East*—By Keshab Chandra Biswas and other's garden,

*South*—By municipal road,

*West*—By municipal road and Srimati Bhubaneswari Sinha's (wife of late Makhan Lal Singha) garden,

is required within the aforesaid village of Tribeni.

This declaration is made, under the provisions of section 6 of Act I of 1894, to all whom it may concern.

A plan of the land may be inspected in the office of the Collector of Hooghly.

M. C. MCALPIN,
*Secretary to the Government of Bengal.*

## DECLARATION.

**Calcutta.**

*No. 4874L.A.—The 2nd July 1923.*—Whereas it appears to the Governor in Council that land is required to be taken by Government at the expense of the Corporation of Calcutta for a public purpose, viz., for rounding off the north-east corner of No. 2, Hazra Lane, in ward No. XXI of the Calcutta Municipality, in the town of Calcutta, it is hereby declared that for the above purpose a piece of land being a portion of premises No. 2, Hazra Lane, and measuring, more or less, 7 chitaks and 5 square feet of standard measurement, equivalent to ·0073 of an acre, bounded on the—

*North and East*—By Hazra Lane,

*South and West*—By the remaining portion of premises No. 2, Hazra Lane,

is required within the aforesaid ward No. XXI of the Calcutta Municipality in the town of Calcutta.

This declaration is made, under the provisions of section 6 of Act I of 1894, to all whom it may concern.

A plan of the land may be inspected in the office of the First Land Acquisition Collector, at No. 2, Commercial Buildings, Calcutta.

M. C. MCALPIN,
*Secretary to the Government of Bengal.*

DECLARATION.

24-Parganas.

*No. 4877L.A.—The 2nd July 1923.*—Whereas it appears to the Governor in Council that land is required to be taken by Government at the expense of the Cossipore-Chitpore Municipality for a public purpose, viz., for widening Shyama Charan Maitra Lane, in the villages of Cossipore and Baranagore, parganas Dihi Panchannogram and Calcutta, zilla 24-Parganas, it is hereby declared that for the above purpose four pieces of land altogether measuring, more or less, 0·0669 of an acre, bounded on the—

PLOT NO. 1

*North*—By Shyama Charan Maitra Lane,
*East*—By Shyama Charan Maitra Lane and Cossipore Road,
*South and West*—By the lands of late Govinda Prasanna Roy, late Kailash Chandra Das, Jogendra Nath Mitra, Aghore Nandini Debi, Sarbeswar Banerjee, Chandra Nath Ghosh, late Kalidas Maitra and Naran Chandra Sadhkan,

PLOT NO 2·

*North*—By Shyama Charan Maitra Lane and land of Surendra Chandra Kumar,
*East*—By the land of Surendra Chandra Kumar,
*South and West*—By Shyama Charan Maitra Lane,

PLOT NO 3

*North*—By Radhamohan Dey Lane,
*East*—By Shyama Charan Maitra Lane,
*South and West*—By the land of Manmatha Nath Mukerji,

PLOT NO. 4

*North*—By Paramanick Ghat Road,
*South and East*—By the land of Ganesh Chandra Dutta,
*West*—By Shyama Charan Maitra Lane,

are required within the aforesaid villages of Cossipore and Baranagore.

This declaration is made, under the provisions of section 6 of Act I of 1894, to all whom it may concern.

A plan of the land may be inspected in the office of the Commissioners of the Cossipore-Chitpore Municipality.

M. C. MCALPIN,
*Secretary to the Government Bengal.*

## Orders by the Conservator of Forests, Bengal.

Sundarbans.

*No. 16For —The 18th June 1923.*—Mr S J. Curtis, Deputy Conservator of Forests, attached to the Sundarbans Division, is posted to the charge of that Division with headquarters at Khulna, with effect from the afternoon of the 13th June 1923.

E. O. SHEBBEARE,
*Conservator of Forests, Bengal (offg)*

## Orders by the Inspector-General of Prisons, Bengal.

*No. 8823, dated Calcutta, the 26th June 1923.*—Lt.-Col. D. P. Goil, I.M.S., made over charge of the Rajshahi Central Jail to Civil Assistant Surgeon Pratul Pati Ganguli on the afternoon of the 6th June 1923.

F. S. C THOMPSON, LT.-COL., I.M.S.,
*Inspector-General of Prisons, Bengal.*

## HIGH COURT NOTICES.

### CIVIL.

*The 28th June 1923.*

*No 7114A.*—Babu Nani Gopal Mukharji, No. I, Subordinate Judge of Midnapore, is vested with the powers of a Judge of a Court of Small Causes for the trial of suits cognizable by such a Court up to the value of Rs 500, within the local limits of the Sadar munsifi of Midnapore.

*No. 7168A.*—Babu Ananga Mohan Lahiri, officiating Subordinate Judge of Mymensingh, is vested with the powers of a Judge of a Court of Small Causes for the trial of suits cognizable by such a Court up to the value of Rs. 500, within the local limits of the Sadar munsifi of Mymensingh.

*No. 7178A.*—Babu Jyotish Chandra Neogi, munsif of Mymensingh, is vested with the powers of a Judge of a Court of Small Causes for the trial of suits cognizable by such a Court up to the value of Rs. 250, within the local limits of the Sadar munsifi of Mymensingh.

*No. 7181A.*—Babu Jyotish Chandra Neogi, Munsif of Mymensingh, is vested under section 19, sub-section (2) of the Bengal, Agra and Assam Civil Courts Act, 1887 (XII of 1887), as amended by the Decentralization Act, 1914 (IV of 1914), with powers to try, under the ordinary procedure, original suits up to the value of Rs. 2,000 arising within the local limits of the original jurisdiction of the District Judge of Mymensingh.

By order of the High Court,

N. G. A. EDGLEY,

*Registrar*

## SMALL CAUSE COURT NOTICES.

NOTICE is hereby given under section 7 of Act IX of 1887 (the Provincial Small Cause Court Act) for the months of July, August and September 1923 or until further orders, that the Judge of the Court of Small Causes at Serampore and Howrah and Subordinate Judge of the 1st Court of Hooghly will hold his sittings as detailed below :—

| | 1923 | | | | | |
|---|---|---|---|---|---|---|
| | July | No of days | August. | No of days. | September. | No of days. |
| Hooghly .. | 1st to 10th .. | 8 | 1st to 9th ... | 8 | 1st to 12th ... | 8 |
| Serampore ... | 11th to 18th ... | 7 | 10th to 17th ... | 7 | 13th to 20th .. | 7 |
| Howrah .. | 19th to 31st ... | 9 | 18th to 31st ... | 8 | 21st to 30th ... | 8 |

Excluding Sundays and holidays.

N. N. GHOSH, *Judge.*

SERAMPORE, *the 19th June 1923.*

NOTICE is hereby given under Act IX of 1887 that the Judge of the Court of Small Causes, Dacca and Munshiganj, will, in the months of August and September 1923, sit in the Courts on the undermentioned dates—

*For August 1923.*

Munshiganj ... From 6th to 15th August 1923.
Dacca ... The rest of the working days of the month of August 1923.

*For September 1923.*

Munshiganj ... From 10th to 15th September 1923.
Dacca ... The rest of the working days of the month of September 1923.

SRIS CHANDRA CHAUDHURI, *Judge.*

DACCA, *the 25th June 1923.*

ORDERS BY OF DIVISIONS.

NOTIFICATION.

*No. 2303J.*—Babu Hem Chandra Sen, Sub-Deputy Collector, Dacca, is transferred to the Munshiganj subdivision of that district.

A. N. MOBERLY, *Commissioner (offg.).*

COMMR.'S OFFICE, DACCA DIVN., DACCA, *the 25th June 1923.*

NOTIFICATION.

*No. 168R.G.*—Babu Sambhu Chand Ray, Sub-Deputy Collector, on probation, at the Sadar station of the district of Nadia, is transferred to the Kushtia subdivision of that district as Circle Officer.

2. This cancels this office notification No. 152R.G., dated the 20th June 1923, transferring him to the Jhenidah subdivision of the Jessore district

J. H. LINDSAY, *Commissioner (offg.)*

COMMR.'S OFFICE, PRESY. DIVN., CALCUTTA, *the 26th June 1923.*

NOTIFICATION.

*No. 171R.G.*—Maulvi Siddiq Ghulam Rahman Khan, Sub-Deputy Collector, on leave, is posted to the Jhenidah subdivision of the Jessore district as Circle Officer

J. H. LINDSAY, *Commissioner (offg.).*

COMMR.'S OFFICE, PRESY. DIVN., CALCUTTA, *the 26th June 1923.*

NOTIFICATION.

*No. 2457J.*—Babu Rajendra Chandra Sen, Sub-Deputy Collector, on probation, Rangpur, is allowed leave on average pay for six weeks from the 5th July 1923 or any subsequent date on which he may avail himself of it under rule 81 (*b*) (*i*) of the Fundamental Rules.

W. A MARR *Commissioner (offg.).*

COMMR.'S OFFICE, RAJSHAHI DIVN., JALPAIGURI, *the 26th June 1923.*

NOTIFICATION.

*No. 2499J.*—Babu Monoranjan Chaudhuri, Sub-Deputy Collector and Circle Officer, Nilphamari, is posted to the headquarters station of the Rangpur district to work in the general line.

W. A. MARR, *Commissioner (offg.).*

COMMR.'S OFFICE, RAJSHAHI DIVN., JALPAIGURI, *the 27th June 1923.*

NOTIFICATION.

*No. 2506J.*—Maulvi Muhammad Taheruddin, Sub-Deputy Collector, Rajshahi Division, is posted to Maldi.

W. A. MARR, *Commissioner (offg.).*

COMMR.'S OFFICE, RAJSHAHI DIVN., JALPAIGURI, *the 27th June 1923.*

NOTIFICATION.

[illegible] Mohan Basak, Sub-Deputy Collector, Rajshahi Division, is posted to the Nilphamari subdivision of the Rangpur district as Circle Officer.

W. A. MARR, *Commissioner (offg.).*

[illegible] DIVN., JALPAIGURI, *the 27th June 1923.*

NOTIFICATION.

*No. 175R.G.*—Maulvi Habibar Rahman, Sub-Deputy Collector, on probation, and Circle Officer at the Jangipur subdivision of the district of Murshidabad, is allowed leave, on average pay for six weeks including privilege leave at credit for one month and three days, with effect from the date on which he may have availed himself of it.

J. H. LINDSAY, *Commissioner (offg.).*

COMMR.'S OFFICE, PRESY DIVN, CALCUTTA, *the 28th June 1923.*

NOTIFICATION.

*No. 2585G.*—Babu Nagendra Nath Dewan, Sub-Deputy Collector, on leave, is posted to the Cox's Bazar subdivision in the district of Chittagong.

A. H. CLAYTON, *Commissioner.*

COMMR.'S OFFICE, CHITTAGONG DIVN, CHITTAGONG, *the 27th June 1923.*

NOTIFICATION.

*No. 2575G.*—Babu Bhubaneswar Sanyal, Sub-Deputy Collector and Khas Tahsildar, Satkania, is transferred to the headquarters station at Chittagong on general duty.

Maulvi Fazlul Karim, No 2, Sub-Deputy Collecter, Sadar, is transferred to Satkania as Khas Tahsildar.

A. H. CLAYTON, *Commissioner.*

COMMR.'S OFFICE, CHITTAGONG, DIVN, CHITTAGONG, *the 27th June 1923.*

NOTIFICATION.

*No. 2163J.G.*—This office notification No 1966J.G., dated the 11th June 1923, transferring Babu Anadi Nath Lahiri, Sub-Deputy Collector, Howrah, to, the district of Bankura, and appointing him to be Circle Officer of Sonamukhi Circle in that district is hereby cancelled.

J. N. GUPTA, *Commissioner.*

COMMR.'S OFFICE, BURDWAN DIVN., CHINSURA, *the 29th June 1923.*

NOTIFICATION.

*No 2169J G.*—Babu Shoy Chand Banerji, Sub-Deputy Collector and Circle Officer of Raipur Circle, in the district of Bankura, is appointed as Circle Officer of Simlapal Circle in the same district, with effect from the 5th June 1923.

J. N. GUPTA, *Commissioner.*

COMMR.'S OFFICE, BURDWAN DIVN., CHINSURA, *the 30th June 1923.*

NOTIFICATION.

*No. 2174J.G.*—Babu Jatindra Mohan Chattarji, Sub-Deputy Collector and Circle Officer of Simlapal Circle, in the district of Bankura, is appointed as Circle Officer of Raipur Circle in the same district, with effect from 5th June 1923.

J. N. GUPTA, *Commissioner.*

COMMR.'S OFFICE, BURDWAN DIVN, CHINSURA, *the 30th June 1923.*

NOTIFICATION.

*No. 2178J.G.*—Babu Bidyut Kumar Raha, Probationary Sub-Deputy Collector, Bankura Sadar, is *temporarily* appointed as Circle Officer of Simlapal Circle in that district.

J. N. GUPTA, *Commissioner.*

COMMR.'S OFFICE, BURDWAN DIVN., CHINSURA, *the 30th June 1923.*

## NOTIFICATION.

*No. 2892J.*—It is hereby notified for general information that, under section 7 of the Local Self-Government Act (Bengal Act III of 1885), the following gentlemen have been duly elected by the Local Boards, noted against their names, to be members of the Faridpur District Board :—

| | | |
|---|---|---|
| 1. | Maulvi Shah Abdul Mannan ... | Sadar Local Board. |
| 2. | Maulvi Abdul Bari ... ... | |
| 3. | Babu Digendra Chandra Banerji ... | |
| 4. | „ Indu Bhusan Sarkar ... | |
| 5. | Maulvi Abdul Gaffur ... | |
| 1. | Babu Krishna Das Roy... ... ... | Madaripur Local Board. |
| 2. | „ Surendra Nath Roy ... ... | |
| 3. | „ Mano Ranjan Banerji ... | |
| 4. | „ Srish Chandra Ghose ... | |
| 5. | Maulvi Daliluddin Ahmed ... | |
| 6. | „ Abdur Rashid ... ... | |
| 7. | „ Golam Moula Choudhary ... | |
| 1. | Khan Bahadur Maulvi Rahamatjan Chaudhury | Gopalganj Local Board. |
| 2. | Maulvi Abdur Quader ... ... | |
| 3. | Babu Pramatha Nath Bose ... | |
| 4. | „ Sarat Chandra Sen Gupta .. | |
| 1. | Rai Kamini Kumar Roy Bahadur, B.L. | Goalundo Local Board |
| 2. | Babu Bejoy Sankar Majumdar ... | |
| 3 | The Hon'ble Haji Choudhury Muhammad Ismail Khan ... ... ... ... | |
| 4. | Maulvi Ahmuzzaman Chaudhury ... ... | |

2. In exercise of the powers conferred on me by section 7 of the aforesaid Act, and acting under the orders of the Local Government given in the exercise of the administrative control vested in them by section 29B of the same Act, I hereby appoint the following gentlemen to be members of the District Board of Faridpur —

| | | |
|---|---|---|
| 1. | The Civil Surgeon of Faridpur ... | *Ex officio* |
| 2. | The Subdivisional Officer of Gopalganj | |
| 3. | The Subdivisional Officer of Madaripur | |
| 4 | Rai Radhika Mohan Lahiri Bahadur | |
| 5. | Rai Sahib Hira Lal Moulik. | |
| 6 | Babu Akshoy Kumar Sen | |
| 7. | Mr. Doyal Chandra Bose. | |
| 8 | Khan Bahadur Maulvi Abdul Gani. | |
| 9. | Khan Sahib Mukhsur Rahaman. | |
| 10. | Maulvi Hafez Abdul Ghani Faridpuri. | |

A. N MOBERLY, *Commissioner (off'g.)*

COMMR.'S OFFICE, DACCA DIVN., DACCA, *the 27th June 1923.*

## NOTIFICATION.

*No. 2950J.*—Maulvi Abul Huda Saiyedulla, Sub-Deputy Collector, on probation, Dacca, is transferred to the headquarters station of the Mymensingh district.

A N. MOBERLY, *Commissioner (off'g).*

COMMR.'S OFFICE, DACCA DIVN., DACCA, *the 30th June 1923.*

## NOTIFICATION.

IT is hereby notified for general information that the 7th September 1923 is fixed for holding by-elections for electing members of the Sadar and the Cox's Bazar local boards in the district of Chittagong to represent thanas Fatikchari and Chakaria, respectively, in place of Babu Bepin Chandra Sikdar, whose election has been set aside by the Civil Court, and Maulvi Badiazzama Chowdhuri, deceased.

S. C. GHATAK, *District Magistrate.*

CHITTAGONG, *the 26th June 1923.*

## NOTIFICATION.

*No. 1475 L.S.-G.*—It is hereby notified for general information that under section 39 of the Bengal Local Self-Government Act, III of 1885 as amended, the following gentlemen have been duly elected to be members of the Palashdanga union committee, in the district of Bankura :—

| Ward No | Names of members |
|---|---|
| I | 1. Babu Jogesh Chandra Chatterjee. |
| II | 2. Babu Adar Chandra Khara. |
| III | 3. Babu Sarat Chandra Chatterji<br>4. „ Rakhal Chandra Roy. |
| IV | 5. Babu Saroda Prasad Ghose. |

The following gentlemen are appointed to be members of the said union committee under section 41 of the Local Self-Government Act :—

1. Babu Beni Madhav Chatterji.
2. „ Sarat Chandra Chakrabarty.

A. W. COOK, *Commissioner (offg.).*

COMMR'S OFFICE, BURDWAN DIVN, CHINSURA, *the 22nd June 1923.*

# The Calcutta Gazette

WEDNESDAY, JULY 4, 1923


## PART IA.

### *Orders and Notifications by the Government of India*

The following notification, issued by the Government of India in the Home Department published in the *Gazette of India*, dated the 16th June 1923, is republished for general information

L BIRLEY,
*Chief Secretary to the Government of Bengal*

NOTIFICATION

JUDICIAL

*Simla, the 9th June 1923.*

*No F-238-23.*—The Hon'ble Mr. Justice H Walmsley, KT, ICS, a Judge of the High Court of Judicature at Fort William in Bengal, having been granted leave on full allowances, with effect from the 28th June 1923 or such subsequent date as he may avail himself of it, up to the 30th August 1923, inclusive, the Governor General in Council is pleased, under the provisions of sub-section (2) of section 105 of the Government of India Act, to appoint Mr A J Chotzner, ICS, to act as a Judge of the High Court during the absence of the Hon'ble Mr Justice Walmsley, KT., or until further orders.

C W. GWYNNE,
*Joint-Secretary to the Government of India (offg.).*

The following notifications, issued by the Government of India in the Finance Department published in the *Gazette of India*, dated the 16th June 1923, are republished for general information

L BIRLEY,
*Chief Secretary to the Government of Bengal*

NOTIFICATIONS

STAMPS

*Simla, the 16th June 1923.*

*No. 359*—In exercise of the powers conferred by section 20, sub-section (2) of the Indian Stamp Act, 1899 (II of 1899), the Governor General in Council is pleased to direct that the following amendment shall be made in the notification of the Government of India in the Department of Commerce No. 348, dated the 13th January 1923, as subsequently amended, namely :—

In the third column of the third item of the table for the words and figures "1/7600 of a rupee, *i.e.*, Marks 1,14,000 = Rs. 15" the words and figures "1/14,250 of a rupee, *i.e.*, Marks 2,13,750 = Rs. 15" shall be substituted

*No 430.*—In exercise of the powers conferred by clause (*a*) of section 9 of the Indian Stamp Act, 1899 (II of 1899), and in supersession of the notifications of the Government of India in the Finance and the Commerce Departments Nos. 1870F. and 1946S., dated the 22nd June 1921 and the 17th September 1921, respectively, the Governor General in Council is pleased to remit the duty chargeable on receipts given for interest paid in British India on securities of the Mysore Darbar.

A. C. MCWATTERS,
*Secretary to the Government of India (offg.).*

The following notifications, issued by the Government of India in the Department of Education, Health and Lands, published in the *Gazette of India*, dated the 16th June 1923, are republished for general information.

L BIRLEY,
*Chief Secretary to the Government of Bengal.*

## NOTIFICATIONS

### AGRICULTURE

*Simla, the 11th June 1923*

*No. 663* —In pursuance of clause (*xi*) of section 4 of the Indian Cotton Cess Act, 1923 (XIV of 1923), the Governor General in Council is pleased to appoint the Revenue Minister, Indore State, to be a member of the Indian Central Cotton Committee constituted under the said Act.

*The 13th June 1923*

*No 682* —In exercise of the power conferred by section 15 of the Indian Cotton Cess Act, 1923 (XIV of 1923), the Governor General in Council is pleased to direct that the following amendments shall be made in the Indian Cotton Cess Rules, 1923, namely —

After rule 15 of the said rules the following rules and Forms shall be inserted, namely —

Form and Verification of Return

16 The return referred to in section 6 of the Act shall be in Form A annexed to these rules and a declaration of the truth of such return shall be subscribed in the terms set forth at the foot of the said Form.

Check of return by Collector

17. For the purpose of satisfying himself of the correctness of any such return the Collector shall check the same in such manner as he thinks fit, and may for this purpose cause the records and accounts of the mill to which the return relates to be examined and compared with the entries in the return.

Form of notice under section 7 (1)

18 The notice referred to in sub-section (*1*) of section 7 of the Act shall be in Form B annexed to these rules.

Assessment under section 7 (2)

19. If the owner of any mill fails to furnish in due time the return referred to in section 6 of the Act, or furnishes a return which the Collector after completion of the check referred to in rule 17 believes to be incorrect or defective, the Collector shall, subject to the provisions of the Act, use such methods as he may think fit for the ascertainment of the amount payable under the Act and shall assess the same accordingly.

### FORM A.

(SEE RULE 16)

Return under section 6 of the Indian Cotton Cess Act, 1923 (XIV of 1923), for the month of _____ 192 .

(*a*) Name of Mill _____

(*b*) Name of owner or Agents _____

(*c*) Average number of spindles working during month. { Mule Spindles _____ / Ring Spindles _____

(*d*) Number of lbs. avoirdupois of Indian cotton consumed or brought under process in the mill during the month of _____ 192 ... _____

(*e*) Equivalent to bales of 100 lbs. each ... ... _____

Rs. A. P

(*f*) Cess at ½ annas per bale ... ... ...

(*g*) Amount remitted ___ herewith / to Local Treasury ___ by ___ Cheque / Draft / Money Order / Note and Cash ...

[Score out (*g*) if remittance does not accompany return.]

I do hereby declare that I have compared the above particulars with the records and books of my mill, and that they are, in so far as I can ascertain, accurate and complete.

Dated this _____ day of _____ _____ 192 .

(Signed).

(To be signed by the Mill-owner, Managing Agent, or other principal officer of the Mill.)

NOTE —Cotton imported from outside India and cotton waste are not liable to the cess The expression 'India' in section 8 of the Act includes British India and Indian States

FORM B.

(SEE RULE 18)

Notice of demand of payment of Cotton Cess under Section 7 of Act XIV of 1923

_____ COLLECTOR'S OFFICE.

*Dated* _____ _____ *192*

To ____

Take notice that the Cotton Cess on the ___ ___ mill for the month of _____ has been assessed at _ _____ _____ and that on behalf of Government I hereby demand payment by you of the sum of Rupees _____ now due and unpaid on account of cotton cess for the month of _____ and that if the above amount be not paid into this office within ten days after the date of service hereof on you I shall proceed to obtain payment of the same according to the provisions of the Indian Cotton Cess Act 1923

M. S D BUTLER,
*Secretary to the Government of India*

The following notification, issued by the Government of India in the Department of Industries and Labour published in the *Gazette of India*, dated the 16th June 1923, is republished for general information

L BIRLEY,
*Chief Secretary to the Government of Bengal*

NOTIFICATION.

*Simla, the 16th June 1923*

*No. M.-749* —In exercise of the powers conferred by section 5 of the Indian Explosives Act, 1884 (IV of 1884), the Governor General in Council is pleased to direct that the following further amendments shall be made in the Indian Explosives Rules, 1914,

the same having been previously published as required by section 18 of the said Act, namely :—

In Schedule III to the said rules,—

(a) In condition 8 of Form J, for the words "once during the currency of the license" the words "once in every year" shall be substituted, and

(b) at the end of condition 8 of Form J, and at the end of condition 5 of Form K, the following shall be added :—

"Such test shall be carried out in the manner prescribed by the Chief Inspector of Explosives by an officer appointed by the local Government in this behalf and a fee of twenty rupees shall be payable by the licensee for such test In the event of the test proving unsatisfactory a fee of fifteen rupees shall be payable by the licensee for each subsequent test until the lightning conductor is passed by the testing officer as satisfactory :

Provided that not more than twenty rupees shall be charged for all tests made on a conductor during any one day"

A H LEY,
*Secretary to the Government of India*

The following notification, issued by the Government of India in the Legislative Department published in the *Gazette of India*, dated the 23rd June 1923, is republished for general information

L. BIRLEY,
*Chief Secretary to the Government of Bengal*

## NOTIFICATION

*Simla, the 20th June 1923*

*No. 113*—In accordance with the provisions of rule 12 (9) of the Legislative Assembly Electoral Rules, the name of the following candidate, who has been declared to be elected a Member of the said Assembly, by the constituency mentioned opposite his name, is hereby published —

| Name | Constituency |
|---|---|
| Mr Kshitish Chandra Neogy .. ... | Dacca Division (Non-Muhammadan Rural) |

L GRAHAM,
*Secretary to the Government of India (offg )*

The following notifications, issued by the Government of India in the Department of Industries and Labour published in the *Gazette of India*, dated the 23rd June 1923, are republished for general information

L BIRLEY,
*Chief Secretary to the Government of Bengal.*

## NOTIFICATIONS.

*Simla, the 21st June 1923.*

*No. A.-197*—In exercise of the powers conferred by section 57 and sub-section (1) of section 77 of the Indian Patents and Designs Act, 1911 (II of 1911), the Governor General in Council is pleased to make the following amendments to the Indian Patents and Designs Rules, 1912 :—

*Amendments.*

1. In rule 10-A of the said rules, after the word, figure and letter "Form 2-A" the words, figure and letter "or on Form 2-B" shall be inserted.

2. In the third column of the First Schedule to the said rules, for the figure and letter "2-A" relating to the entry "1-A" the word, figures and letters "2-A or 2-B shall be substituted.

3. In the Second Schedule to the said rules:

(a) in the List of forms after the entry relating to Form 2-A the following entry shall be inserted, namely:—

| "Form No. | Act Section. | Title. | Fee. |
|---|---|---|---|
| | | | Rs. |
| 2-B ... ... ... | 78-A. ... ... | " | 10" |

and

(b) after Form 2-A the following Form shall be inserted, namely —

"INDIAN PATENTS AND DESIGNS ACT, 1911 — Form 2-B.

*Application for patent under reciprocal arrangements with the United Kingdom or other parts of His Majesty's dominions. — Fee. Rs 10.

(*To be accompanied by the specification on Form 3 in duplicate*)

I (or we) [1] _____ — [1] Insert name, calling and address

do hereby declare :—

(I) that I (or we) claim to be legal representative (s) or assignee (s) of who has or have made application (s) for the protection of an invention of which the title is _____ — [2] Insert title.

in the United Kingdom of Great Britain and Ireland and the Isle of Man on the following official dates,[3] viz., _____ and — [3] Insert date of application in the United Kingdom

in the following British Possession or Possessions[4] and on the following official dates, viz., _____ — [4] Insert name of each British Possession followed by the date of application in each respectively

(II) that the invention was not in use in British India by any other person before the [5] _____; — [5] Insert date of earliest of the above applications

(III) that the specification filed with this application is, or any amended specification which may hereafter be filed in this behalf will be true of the invention to which this application relates;

(IV) that the facts and matters stated herein are true to the best of my (or our) knowledge, information and belief.

I (or we) humbly pray that a patent may be granted to me (or us) for the said invention in priority to other applicants, and that such patent shall have the date [6] _____ — [6] Insert date as at [5]

Dated this _____ day of _____ 192 — Date and sign

(Signed) _____

To

The Controller of Patents,

1, Council House Street,

Calcutta."

## POST OFFICE.

*The 23rd June 1923.*

*No. C.A.-195.*—In exercise of the powers conferred by the Indian Post Office Act, 1898 (VI of 1898), the Governor General in Council is pleased to direct that the following further amendment shall be made in the rules issued with the notification of the Government of India in the Department of Commerce and Industry No. 2883-45, dated the 26th April 1913, namely :—

After clause (*c*) of rule 145 of the said rules, the following clause shall be inserted, namely :—

"(*d*) The Chairman of the Board of Trustees for the European Hospital for mental diseases at Ranchi and the Superintendent of the said Hospital, provided that the articles posted by them relate solely to the business of the Hospital."

A. H. LEY,
*Secretary to the Government of India.*

## Orders by the Commissioner of Income-tax, Bengal.

*No. 2670-IC.T.—The 18th June 1923.*—Maulvi Abdul Hamid, Assistant Income-tax Officer, Calcutta, District II, is allowed leave on average pay for three months and twenty-two days, with effect from the 4th April 1923, under article 81 (*b*) (*ii*) of the Fundamental Rules.

E. N. BLANDY,
*Commissioner of Income-tax, Bengal.*

# The Calcutta Gazette

WEDNESDAY, JULY 4, 1923.


## PART IB.

### *Educational Notices.*

### EDUCATION DEPARTMENT, BENGAL.

NOTIFICATION

The Post-Graduate Research Scholarships of Rs 100 a month each, held by the undermentioned candidates, are renewed for one year with effect from the 1st July 1923 —

| Serial No | Name of scholar | Subject of researches | Place of work |
|---|---|---|---|
| | Babu Gurudas Bhar, M Sc | Pure Mathematics, with special reference to the subject of Higher Plane Curves | Calcutta University College Library |
| | Babu Surja Kanta Mukherjee, M Sc | Physics with special reference to the subject of the expansion co efficients of magnetic metals | Presidency College |

E F OATEN,
*Assistant Director of Public Instruction, Bengal*

CALCUTTA, *the 27th June 1923.*

### Dr. Chandra's Scholarship in Materia Medica and Therapeutics.

THE above scholarship of the value of Rs. 361-8 will be awarded to the best successful candidate who will be selected at an examination to be held this year in July

(1) The examination is open to all senior students of the Medical College, Calcutta

(2) Any ex-senior student of the Medical College who may at the time of the examination be studying at any Medical College in India or Europe

(3) Any graduate or licentiate in medicine of whatever standing and however employed who may have obtained either in Europe or in India a medical diploma or degree entitling him to practise medicine, provided that such graduate or licentiate at some time received a portion of his professional education in the Medical College, Calcutta.

Certificates to the effect that the candidate fulfils the above requirement, together with one of good moral character signed by a person of respectability, should be submitted to the Principal, Medical College, Calcutta, on or before the 15th July 1923

Candidates are required to write an essay on the chemical composition, pharmacology and therapeutics of "Seeds of Butea Frondosa" and submit the same to the Professor of Materia Medica and Therapeutics, Medical College, Calcutta, by the 25th July 1923.

Personal attendance at the examination is not necessary.

Preference will be given to the candidate whose thesis bears evidence of original investigation of any worth in connection with the above seed

### State Medical Faculty of Bengal.

THE following correction is made in the list of successful candidates at the Primary Licentiate Examination published in the *Calcutta Gazette* of the 13th June 1923, Part IB, page 213 :—

*After*

" Basak, Sitanath ... ... 19 Campbell Medical School."

*to be read*

" Basu, Banbihari ... ... 19-4 Campbell Medical School "

G. C MOOKERJEE,
*Secretary, State Medical Faculty of Bengal.*

GROSVENOR HOUSE, *the 20th June 1923.*

## GOVERNMENT COMMERCIAL INSTITUTE, CALCUTTA.

### The Evening Lectures.

Courses of evening lectures are delivered in the following subjects. A student can take up one subject or several subjects, provided the class hours permit him to attend the lectures in each subject —

(*a*) Book-keeping (Elementary)
(*b*) Book-keeping (Advanced)
(*c*) Shorthand (Theory)
(*d*) Shorthand (Speed)
(*e*) Typewriting.
(*f*) English (including commercial correspondence, letter-drafting and precis-writing)
(*g*) Outlines of Political Economy
(*h*) Banking and Currency
(*i*) Annuities and Insurance.
(*j*) Mercantile Law
(*k*) Accountancy and Auditing

The courses of lectures commence in July and continue until the following April except the course of Accountancy and Auditing, which extend over two years

(*a*) **Book-keeping (Elementary).**—Students having a satisfactory knowledge of English and Arithmetic are admitted. Text-book—Arthur Fieldhouse's Complete Book-keeping, up to 100 exercises including partnership accounts. The fee for the full session, July to April, is Rs. 24, payable in eight monthly instalments of Rs 3 each. Classes are held three times a week from 6 to 7 P.M.

(*b*) **Book-keeping (Advanced).**—Students who have passed the Elementary Book-keeping Examination, or who can give satisfactory proof of their knowledge of Elementary Book-keeping up to the requisite standard, are admitted. Text-book—Complete Book-keeping by Arthur Fieldhouse. The fee for the full session, July to April, is Rs. 32, payable in eight monthly instalments of Rs 4 each Classes are held twice a week from 6 to 7 P.M.

(*c*) **Shorthand (Theory).**—Pitman's Shorthand is the system taught Students having a sufficient knowledge of English are admitted at the beginning of the session in July. Students are also admitted in December, provided they have already a sufficient knowledge of Shorthand to enable them to appreciate the lectures in the session, December to April.

The minimum speed required to pass the examination is 80 words per minute. The class is held daily from 5 P.M.

The fee for the session, July to November, is Rs. 12, which may be paid in four monthly instalments of Rs. 3 each. The fee for the session, December to April, is Rs 16, which may be paid in four monthly instalments of Rs. 4 each.

(*d*) **Shorthand (Speed).**—Students having a speed of 60 words per minute are admitted in July, and the class practice is from 60 to 120 words per minute.

Students having a minimum speed of 80 words per minute are admitted in December, and the class practice is from 80 to 140 words per minute.

In the examination the tests are at four grades of speed, 80, 100, 120, 140 words per minute, and at higher speeds if candidates can write more rapidly. Classes are held daily from 6 P.M. Fees are the same as for (*c*).

(*e*) **Typewriting.**—Beginners are admitted in July. Students having a minimum speed of 20 words per minute are admitted in December. Text-book—Practical Course in Touch Typewriting by Charles E. Smith. The minimum speed required to pass

the examination at the end of April is 35 words per minute. Certificates are issued for 35, 40, 45, 50, 55, 60 words per minute. For each of the speed tests there is a corresponding accuracy test in tabulating. Classes are held at 5, 6 and 7 P.M. Tuition fees are the same as for (c) A stationery fee of Re. 1 is payable on admission.

**Combination of the above subjects and reduction of fee.**—If a student simultaneously takes up two or three of the subjects (a) to (e), a reduction of Re. 1 per instalment of each of the fees payable by him will be granted: for example, if a student is a member of both the Shorthand and the Elementary Book-keeping classes, he will have to pay instalments of Rs. 2 for each subject instead of Rs 3 for the session, July to December.

(f), (g), (h), (i) **and** (j).—Classes are formed in these subjects if a sufficient number of candidates apply for admission. The fee for each subject is Rs 3 for each series of ten lectures.

(k) **Accountancy and Auditing.**—There are two courses of year each for ordinary students, or one year for those who are already practising as Auditors, to prepare candidates for the Government examination of Diploma in Accountancy, which qualifies them to obtain the Government license to practise as Auditors. Students of this class have to attend Book-keeping and Mercantile Law classes, for which no extra fee has to be paid The fee is Rs 144, payable in advance in four half-yearly instalments of Rs 36 each in the case of ordinary students and Rs 72 in two half-yearly instalments of Rs. 36 each in the case of those who are practising as Auditors and hold a provisional license granted by Government.

2. **Examinations.**—The examination in subjects (a) to (j) is held at the end of April, at the end of the year's course, under the control of the Government Commercial Institute Board, and successful candidates receive certificates signed by the Director of Public Instruction, Bengal, and countersigned by the Secretary to the Bengal Chamber of Commerce The examination fee for each subject is Rs 5

3. **Attendance.**—Strict regularity and punctuality of attendance are observed Students must attend 75 per cent of the lectures in order to appear at the examination Classes are not held in the evening on Saturday.

4 **Standard of Admission.**—Candidates who have attended the lectures of the day course are eligible for admission Others will be admitted, provided they appear qualified for the class or classes they seek to join

5. **Prizes.**—Prizes of Rs 50 each are offered by the Bengal Chamber of Commerce to the best candidates from the evening classes in subjects (b), (d), (f), (g), (h), (i) and (j) Three medals are offered by the Remington Typewriter Company to the best three students of either the day or evening classes in the Typewriting examination

6 **Admission.**—Candidates for admission should send in their applications and register their names, with a deposit of fees, before the end of June Candidates who desire to be admitted in December should apply before the end of November

7 **Athletics and other Institute activities**—Students have to pay a fee of Re 1 on admission for athletics and other institute activities

8. Tuition fees for different subjects mentioned above may be slightly increased. The matter is under consideration of Government

G K SEN, *Principal (offg)*

CALCUTTA, *the 5th June 1923*

## THE GOVERNMENT COMMERCIAL INSTITUTE.

### The Day Course.

1. There is a specialized Day Course extending over two years Candidates who have passed the Matriculation Examination are eligible for admission. Others are admitted, provided they satisfy the Education Department, by passing a preliminary test examination of a similar standard, that they have sufficient general education to enable them to derive advantage from the teaching.

2 **Compulsory subjects:**—

(a) English (modern), and especially English Correspondence, including Commercial Correspondence, letter-drafting and precis-writing.
(b) Arithmetic, including Commercial and Mental Arithmetic
(c) An Indian vernacular.
(d) Commercial Geography.
(e) Book-keeping (Junior).

For an Indian vernacular, the Institute provides a thorough training in Bengali Students taking up any other vernacular are given directions for the examination for which they have to prepare themselves Anglo-Indian candidates who have passed the Higher Standard examination in an Indian vernacular held by the Inspector of European

Schools, Bengal, or who have passed the Lower standard examination in an Indian vernacular held by the Board of Examiners, will be further examined in the same vernacular in the following manner :—

(1) They will be examined orally to test their command of the vernacular for the ordinary purposes of business.

(2) They will have to translate into English a business letter dictated in the vernacular, and will be examined in both the dictation and translation.

3. **Optional Subjects.**—Shorthand and Typewriting—(A candidate may take up one or both, according to his option).

A student must take up all the compulsory subjects and must pass in each to obtain the final certificate. Passing in the Optional subjects—Shorthand and Typewriting—is counted towards a prize.

4. **Examination.**—At the end of the first year's course, an examination is held to determine promotion to the second year class and to decide the award of scholarships At the end of the two years' course the final examination is held towards the end of the April or the beginning of May. A candidate who fails in one of the five compulsory subjects is not eligible for a pass certificate. A candidate who fails in one subject only in the final examination may appear again in the final examination in the following year in that subject without attending the class A candidate who fails in only two subjects in the final examination may appear in the final examination in the following year in those subjects, provided that he attends the classes in those subjects.

A candidate who attends a final examination to be examined in a subject in which he has previously failed must pass again in English, if English was not a subject in which he had failed, in order to obtain the diploma.

5. **Text-books.**—The following text-books are prescribed .—

(*a*) English—Hooper and Graham's "Home Trade."

(*b*) Arithmetic—Grant and Hill's "Commercial Arithmetic" and "Mental Arithmetic."

(*c*) Bengali—"Kapalkundala" by Bankim Chandra Chatterjee, and "Prathamik Babosasinksha" by Santosh Nath Sett

(*d*) Geography—"Commercial Geography of the World" by A. J Herbertson, "A Short Commercial Geography" by L W. Lyde, "A School Economic Atlas" by J. G. Bartholomew and "A new Geography of the Indian Empire, Burma and Ceylon" by Morrison.

(*e*) Book keeping—Arthur Fieldhouse's "Complete Book-keeping."

(*f*) Shorthand—Pitman's Shorthand Instructor, Centenary edition.

(*g*) Typewriting—Practical Course in Touch Typewriting by Charles E. Smith.

The text-books cost about Rs 35.

6 **Session and Fees.**—The session begins about the end of June and closes about the end of April. The usual summer and Puja vacations are given. The students have to pay an admission fee of Rs. 5 and monthly tuition fee at the rate of Rs. 5 beginning from June. The final examination fee is Rs. 8. Tuition fees are to be paid monthly in advance after admission. Stationery fee of Re. 1 is payable once a year at the beginning of each session by the students who have taken Typewriting as optional subject. A yearly subscription of Re. 1 is also payable at the beginning of each session by students of both the first and second year classes for Athletics and other Institute activities.

7. **Attendance.**—Strict regularity of attendance is enforced. Students attending less than 75 per cent. of the lectures are debarred from promotion to the second-year class or from appearing at the final examination. Classes are held from 10-30 A.M. to 4 P.M. with half-an-hour's interval daily from 1-30 to 2 P.M. On Saturdays classes are held from 10-30 A.M. to 1-30 P.M.

8. **Scholarships and Prizes.**—Three scholarships of Rs. 12 each per mensem, tenable for one year are awarded to those students of the first-year class who, amongst those admitted, have secured the highest marks in English at the Matriculation Examination of the Calcutta University. Three scholarships of Rs. 20 each per mensem, tenable for one year, are awarded to those students of the second-year class who obtained the highest total marks at the examination held at the end of the first year's course. Holders of Junior and Senior scholarships at the Matriculation Examination are not eligible for these scholarships. The best two students in the final examination at end of two years' course obtain prizes of Rs. 75 and 50, respectively, offered by the Bengal Chamber of Commerce. The Remington Typewriter Company present medals to the best three students in typewriting at the final or special examination.

9. Applications for admission must reach the Principal before the 30th June every year As only admitted number can be enrolled, priority of application is considered.

(A separate prospectus is issued for the evening lectures.)

G. K. SEN, *Principal (offg.).*

CALCUTTA, *the 5th June 1923.*

## ORDERS BY THE VICE-CHANCELLOR AND SYNDICATE OF THE CALCUTTA UNIVERSITY.

The undermentioned candidates are declared to have passed the B Sc Examination, 1923 :—

### HONOURS LIST.

#### MATHEMATICS

*Class I*

(In order of merit)

| | | |
|---|---|---|
| 1 | De, Dhirendrakrishna | Presidency College |
| 2 | Malik, Durgadas | Hughli College. |
| 3 | Ghatak, Sarojnath | Presidency College |
| 4 | Mukhopadhyay, Nangopal | City College |
| 5 | Ray, Mahabirprasad | Krishnagar College |
| 6 | Bandyopadhyay, Phanindranath | Hughli College |
| 7 | Gupta, Susirendu | St Xavier's College |
| | Kantimahanti Apparao | Ditto |
| | Mukhopadhyay, Santanukumar | Presidency College |

*Class II*

(In order of merit)

| | | |
|---|---|---|
| 1 | Sen, Sachindranath | Chittagong College |
| 2 | Chanda, Haramohan | Ditto |
| 3 | Bandyopadhyay, Tulsikumar | Hughli College |
| 4 | Sen, Pratapchandra | Presidency College |
| 5 | Mukhopadhyay, Makhanlal | Rajshahi College |
| 6 | Aminullah | Presidency College |
| 7 | Mitra, Chittaranjan | Presidency College |
| 8 | Sarkar, Sibaprasanna | St Xavier's College |
| 9 | Sen, Sailendranath | Rajshahi College |
| 10 | Chattopadhyay, Kamalal | Bangabasi College |
| 11 | De, Kamalkumar | Chittagong College |
| 12 | Ghosh, Sasankabhushan | Presidency College |
| 13 | Adhya, Radhikamohan | Ditto. |
| 14 | Basu, Manindranath | K N College, Berhampur |
| | Mukhopadhyay, Sureschandra | Presidency College |
| 16 | Mitra, Hirendranath | City College |
| | Raychaudhuri, Praphullakumar | Presidency College |
| 18 | Sunkavalli, Doronna | St Xavier's College |

#### PHYSICS

*Class I*

(In order of merit)

| | | |
|---|---|---|
| 1 | Ray, Satyendranath | Presidency College |
| | Raychaudhuri, Debiprasad | Scottish Churches College, Non collegiate Student, Roll Cal. N 28 |
| 3 | Acharyya, Durgaprasanna | Presidency College |
| 4 | Sanyal, Sarojbandhu | St. Xavier's College |

*Class II.*

(In order of merit)

| | | |
|---|---|---|
| 1 | Bandopadhyay, Jitendranath | Scottish Churches College |
| 2 | Bhaduri, Tamalbihari | Ditto |
| 3 | Sil, Madhusudan | Presidency College |
| 4. | Datta, Lalitmohan | St Xavier's College |
| 5 | Dhar, Hariigopal | Presidency College |
| 6 | Mukhopadhyay, Niranjankumar | St Xavier's College, Non collegiate Student, Roll Cal N 47. |
| 7 | Basu, Ramanath | Presidency College |
| 8 | Mallanti, Purnachandra | St Xavier's College |

| | | |
|---|---|---|
| 9 | Chaudhuri, Girindrakumar | Presidency College |
| 10 | Sarkar, Nirendranath | Ditto, Non-collegiate Student, Roll Cal N 67 |
| 11 | Chattopadhyay, Narayanchandra | K N. College, Berhampur |
| 12 | Gupta, Lalitananda | Scottish Churches College. |
| 13 | Ray, Jnanendranarayan | Presidency College. |

CHEMISTRY

*Class I.*

(In order of merit)

| | | |
|---|---|---|
| 1 | Guha, Bireschandra | St Xavier's College |
| 2 | Haldar, Sudhansukumar | Presidency College |
| 3 | Sengupta, Sureschandra | Rajshahi College |

*Class II*

(In order of merit)

| | | | |
|---|---|---|---|
| 1 | Ray, Saurindranath | ... | Rajshahi College |
| 2 | Gupta, Arunchandra | ... | Presidency College. |
| 3 | Chakrabarti, Dhirendranath | ... | Ditto. |
| 4 | Chandachaudhuri, Asokkumar | .. | Non-collegiate Student, Roll Cal N 21 |
| | Goswami, Bijaykali | | K N. College, Berhampur |
| 6 | Ray, Subalchandra | . | Scottish Churches College. |
| 7 | Sengupta, Premranjan | ... | St. Xavier's College |
| 8 | Bhuyan, Mahendranath | ... | Ditto. |
| 9 | Basu, Jyotikanta | ... | Presidency College |
| 10 | Mitra, Santoshkumar | .. | St. Xavier's College |
| 11 | Bhattacharyya, Brajendrachandra | ... | Ditto. |
| 12 | Majumdar, Manendranarayan | .. | Rajshahi College |
| 13 | Chaudhuri, Radhakaranjan | .. | Ditto |
| | K Krishnamurti | .. | Scottish Churches College, Non Student, Roll Cal. N 30 |
| 15 | Deka, Manomohan | ... | Cotton College, Gauhati |
| 16 | Basu, Amiyakumar | | Presidency College |
| 17 | Sengupta, Priyanath | ... | Ditto. |
| 18 | Lahiri, Birendramohan | .. | Ditto |
| 19 | Niyogi, Surendranath | ... | Scottish Churches College |
| 20 | Chaudhuri, Pareschandra | . | Rajshahi College. |
| 21 | Kalita, Siddhinath | .. | Cotton College, Gauhati |
| 22 | Bhaduri, Dwijendralal | . | St Xavier's College. |
| 23 | Sengupta, Satyendranath | ... | Ditto |
| 24 | Bandyopadhyay, Kalidhan | ... | Ditto |
| 25 | " Pankajkumar | ... | Ditto |
| 26 | Ray, Jatindranath | .. | Ditto |
| 27 | Pal, Patitpaban | ... | Scottish Churches College |
| 28 | De, Tripuracharan | ... | St Xavier's College. |
| 29 | Dasghosh, Sisirkumar | ... | Ditto. |
| 30 | Basu, Bhanurasim | ... | Presidency College |

PHYSIOLOGY

*Class I*

(In order of merit)

| | | | |
|---|---|---|---|
| 1 | Chakrabarti, Jitendramohan | ... | Presidency College |
| 2 | Mukhopadhyay, Satindranath | ... | Ditto |
| 3 | Misra, Kasinath | ... | Non collegiate Student, Roll Cal. N. 7 |

*Class II.*

(In order of merit)

| | | | |
|---|---|---|---|
| 1 | Pal, Surendranath | ... | Presidency College |
| 2 | Maitra, Praphullachandra | ... | Ditto. |
| 3 | Gupta, Pratulchandra | ... | Ditto |
| 4 | Basu, Pradoshchandra | ... | Ditto |
| 5 | Das, Jyotirindranath | ... | Ditto |

BOTANY.

*Class II*

(In order of merit)

| | | |
|---|---|---|
| 1 | Basu, Sachindranath, II | ... Presidency College |
| 2 | Sil, Kshetramohan | ... Ditto |
| 3 | Mitra, Jatindranath | . Ditto |
| 4 | Dasgupta, Sachindranath | .. Ditto |

GEOLOGY

*Class II*

(In order of merit)

| | | |
|---|---|---|
| 1 | Dasgupta, Taraprasad | .. Presidency College |
| 2 | Basu, Bijaykumar | ... Ditto |
| 3 | Sen, Jyotirmay | ... Ditto |

ZOOLOGY

*Class II*

(In order of merit)

| | | |
|---|---|---|
| 1 | Sanyal, Madhusudan | Non-collegiate Student, Roll Cal N 72 |
| 2 | Haldar, Amulyakrishna | Non collegiate Student, Roll Cal N 39. |

EXPERIMENTAL PSYCHOLOGY

*Class I*

(In order of merit)

Sengupta, Pramodkumar — Non collegiate Student, Roll Cal N 9.

*Class II*

Sarmasarkar, Sudhirchandra ... Non collegiate Student, Roll Cal N 41

ANTHROPOLOGY

*Class I*

Bhattacharyya, Jogendranath .. Non-collegiate Student, Roll. Cal N 20

***Passed with distinction***

(In alphabetical order)

| | | |
|---|---|---|
| | Acharyya, Parmananda | Bangabasi College, Non-collegiate Student, Roll Cal N 17 |
| | Adhya, Santoshkumar | Bangabasi College |
| | *Aminur Rahman Khan | Ditto |
| | Bandyopadhyay, Anandagopal | K N College, Berhampur |
| | " Debiprasad | St Xavier's College |
| | " Mahimaranjan | Ditto |
| | Nilambukanta | Hughli College |
| | Phanindralal | Rajshahi College |
| | Ratanlal | Ditto |
| 10 | Santoshkumar | City College |
| | Sibanath | Scottish Churches College. |
| | Surendranath | St Xavier's College |
| | Barman Chandrasekhar | Ditto. |
| | Baruya, Indubhusan | Chittagong College |
| | " Tapanlal | Cotton College, Gauhati |
| | *Basak, Mohinimohan | K N. College, Berhampur |
| | Basu, Ajitkumar | Hughli College |
| | " Arunkumar | Bangabasi College |
| | " Jitendrakumar | Scottish Churches College Non-collegiate Student, Roll. Cal N 27 |
| 20 | " Kshetrakumar | St. Xavier's College |

| | | |
|---|---|---|
| | Bhadra, Atulkrishna | City College |
| | Bhaduri, Sukumar | Bangabasi College. |
| | Bhattacharyya, Harendrakumar | Cotton College, Gauhati |
| | " Kedarnath | Ditto |
| | " Pramodchandra | Scottish Churches College |
| | " Satyaranjan | Bangabasi College |
| | " Taranath | City College |
| | Bhaumik, Sailendramohan | Rajshahi College |
| | Biswas, Satyendra S | Presidency College. |
| 30 | Chakrabarti, Amulyakanta | Rajshahi College |
| | Balaram | K N College, Berhampur |
| | Jagadischandra | St. Xavier's College |
| | Kalicharan | Vidyasagar College |
| | Nirmalchandra | Presidency College |
| | Phanibhusan | Vidyasagar College |
| | Prabhaschandra | Rajshahi College |
| | Charles C Muthaiya | Scottish Churches College |
| | Chattopadhyay, Aloknath | St. Xavier's College |
| | " Ambujakumar | Ripon College. |
| 40 | " Kumudchandra | Bangabasi College |
| | " Praphullachandra | Ditto |
| | " Sambhunath | City College |
| | Chaudhuri, Mrinalkanti | Rajshahi College. |
| | Das, Bibhutibhushan | City College, Non-collegiate Student, Roll Cal N 52 |
| | " Binaybhushan | Rajshahi College |
| | " Birendramohan | Cotton College, Gauhati |
| | " Harendragopal | St Xavier's College |
| | " Lakshminarayan | City College, Non collegiate Student, Roll Cal N 57. |
| | " Sripatibhushan | Scottish Churches College |
| 50 | " Tarincharan | Krishnagar College |
| | Daschaudhuri, Bimanbihari | Scottish Churches College |
| | Datta, Anangamohan | Ditto |
| | " Binaykrishna | Hughli College |
| | " Dakshinaranjan | Chittagong College |
| | " Dhirendranath | Vidyasagar College Non collegiate Student, Roll Cal N 22 |
| | " Kalipada | Bangabasi College |
| | " Krishnadas | Ditto |
| | " Santoshkumar | Ditto |
| | " Sisirkumar | Chittagong College |
| 60 | De, Rajchandra | Rajshahi College |
| | " Sudhirkumar | St Xavier's College |
| | Debaksi, Sudhansubhushan | Rajshahi College |
| | Gangopadhyay, Maheschandra | Ditto |
| | " Manoranjan | Bangabasi College |
| | Ghosh, Amales | K N College, Berhampur |
| | " Amulyakrishna | City College |
| | " Ganeschandra | Scottish Churches College |
| | " Gopikrishna | K N College, Berhampur |
| | " Jyotirmay | Rajshahi College |
| 70 | " Kisorilal | Bangabasi College |
| | " Krishnalal | City College. |
| | " Nisinath | Rajshahi College |
| | " Pannalal | Scottish Churches College |
| | " Rajendranath | Ripon College |
| | " Sailendranath | St Xavier's College |
| | " Santiprasad | City College |
| | Goswami Raneschandra | Rajshahi College. |
| | Gupta, Bholanath | K N College, Berhampur |
| | " Binaybhushan | City College |
| 80 | " Binaybhushan | St Xavier's College |
| | Hajarika, Surendranath | Non-collegiate Student, Roll Cal. No 1 |
| | Haldar, Anantalal | St Xavier's College |
| | Jadunandan Prasad | Bangabasi College |
| | Jagadish Natarajan | City College |
| | Jha, Padmanand | Ripon College |
| | Karmakar, Rakhalchandra | K. N. College, Berhampur |
| | Kumar, Phatikchandra | Ripon College. |
| | Maiti, Satischandra | K. N College, Berhampur. |
| | Maitra, Bhabendranath | Ditto |
| 90 | " Dhirendrakumar | Ditto |
| | Majumdar, Hrishikes | Non collegiate Student, Roll Cal N. 43. |
| | " Sureschandra | K. N. College, Berhampur. |
| | Mallik, Parameschandra | Hughli College |
| | Mandal, Lakshmanchandra | City College. |
| | " Prasantakumar | St Xavier's College |
| | Misra, Tarapada | Ripon College |
| | Mitra, Ajitkumar | Hughli College |
| | " Debiprasad | Scottish Churches College. |

| | | |
|---|---|---|
| | Mitra, Haripada | Bangabasi College. |
| 100 | „ Sanatkumar | City College. |
| | Mukhopadhyay, Amarnath | St Xavier's College |
| | „ Anandagopal | Rajshahi College |
| | „ Bimalasankar | Krishnagar College. |
| | „ Jagabandhu | K. N College, Berhampur |
| | „ Prabhatnarayan | Ditto. |
| | „ Sudhansusekhar | St Xavier's College |
| | „ Susilchandra | Bangabasi College, Non-collegiate Student, Roll Cal N 12 |
| | Nand Kishore Lal | Ripon College |
| | Naskar, Saradaprasad | Bangabasi College |
| 110 | Niyogi, Panchugopal | Scottish Churches College |
| | Pal, Hemantakumar | Bangabasi College |
| | „ Jogeschandra | City College. |
| | Porel, Satyacharan | St Xavier's College |
| | Pramanik, Debendranath | Rajshahi College. |
| | Ray, Asutosh | K N. College, Berhampur |
| | „ Debendrakumar | Rajshahi College |
| | „ Girijapati | K N College, Berhampur. |
| | „ Kaliprasanna | Ditto |
| | „ Kshitischandra | Rajshahi College |
| 120 | „ Mrinalkanti | Scottish Churches College |
| | „ Sudhamay | Ditto |
| | Raychaudhuri, Jitendranath | St Xavier's College |
| | „ Krishnaprasanna | City College |
| | Saha, Arunchandra | Scottish Churches College |
| | „ Nandalal | St Xavier's College |
| | Sanyal, Kamalkrishna | City College |
| | Sarkar, Abanibhushan | St Xavier's College, Non-collegiate Student, Roll Cal N 48 |
| | „ Satyendranath | Presidency College |
| | „ Tinkari | St. Xavier's College |
| 130 | Sen, Batakrishna | City College |
| | „ Bibhutibhushan | St Xavier's College |
| | „ Jatindrakumar | Rajshahi College |
| | „ Jnanendranath | K N College, Berhampur |
| | „ Kirtibhushan | City College |
| | „ Krishnakisor | Ditto |
| | „ Nirmalchandra | Chittagong College |
| | „ Satyaprasanna | Ditto |
| | „ Syamsakha | Ripon College |
| | Sengupta, Jitendramohan | Presidency College |
| 140 | Set, Tulsicharan | Scottish Churches College |
| | Sil, Manmathakumar | Ripon College, Non collegiate Student, Roll Cal. N 46 |
| | Sinha, Jyotischandra | City College. |
| | „ Ranajitkumar | Bangabasi College |
| 143 | Som, Phanibhushan | Hughli College |

*Pass Course*

(In alphabetical order)

| | | |
|---|---|---|
| | Acharyya, Jnanendralal | Rajshahi College |
| | Aftabuddin Ahmed | Ditto. |
| | Aich, Kamalaprasad | St Xavier's College |
| | Bagchi, Bimalakanta | Ditto. |
| | „ Kalidas | Non-collegiate Student, Roll Cal N 10 |
| | Baker, Joseph Elmer Grieeff | St Xavier's College |
| | Bandyopadhyay, Balalal | Ditto. |
| | Chandicharan | Ripon College |
| | Chandipada | Ditto |
| 10 | „ Hemchandra | St Xavier's College. |
| | Jibendramohan | Presidency College. |
| | Kirankumar | Scottish Churches College. |
| | Manotosh | Ditto. |
| | Samaranjan | Bangabasi College |
| | „ Sachindranath | Scottish Churches College. |
| | „ Tarapada | Ditto |
| | Barat, Sachindranath | City College |
| | Bardhan, Upendrachandra | Vidyasagar College. |
| | Basak, Praphullakumar | K N. College, Berhampur. |
| 20 | Basu, Amiyakumar | Scottish Churches College, Non-collegiate Student, Roll Cal. N 33 |
| | „ Basantakumar | City College. |
| | „ Jitendranath | Vidyasagar College, Non-collegiate Student, Roll Cal N. 23. |
| | „ Kasinath | Scottish Churches College |
| | „ Nirajendranath | Ditto |
| | „ Prabhaschandra | Ditto |
| | „ Pradyotkumar | City College |

| | | |
|---|---|---|
| | Basu, Pramathanath | ... Vidyasagar College. |
| | " Pramodacharan | ... Scottish Churches College |
| | " Ramchandra | ... St. Xavier's College |
| 30 | " Santoshkumar | ... Bangabasi College |
| | " Sisirkumar | ... City College. |
| | " Sudhirkumar | ... Bangabasi College. |
| | Basumallik, Kamalkrishna | ... Presidency College |
| | Benarasi Lall | ... Ditto. |
| | Bhaduri, Taradas | ... K. N College, Berhampur |
| | Bhattacharyya, Anangakumar | .. Scottish Churches College. |
| | " Asutosh | ... Rajshahi College |
| | " Bhabadeb | ... City College. |
| | " Bibhutibhushan | ... Ditto |
| 40 | " Rajendrachandra | ... Bangabasi College, Non-collegiate Student, Roll Cal. N 16 |
| | " Sachindranath | ... Presidency College. |
| | " Sailendranath | ... Vidyasagar College |
| | " Suryyakumar | ... Chittagong College |
| | Bhowal, Debendrachandra | ... Rajshahi College |
| | Biswas, Dwijendranath | ... St. Xavier's College |
| | " Haranath | ... Rajshahi College. |
| | " Pasupatcharan | ... Bangabasi College |
| | " Sunilkumar | ... Bangabasi College, Non-collegiate Student, Roll Cal N 14 |
| | Chakrabarti, Dhirendranath | .. St Xavier's College |
| 50 | " Girindranath | ... Bangabasi College |
| | " Hemantakumar | .. Ditto. |
| | " Jatindranath | ... K. N College, Berhampur |
| | " Manmathanath | ... Presidency College |
| | " Nibaranchandra | Scottish Churches College |
| | " Nisanath | .. Rajshahi College. |
| | " Nripendranath | .. Bangabasi College |
| | " Sibendranath | . Rajshahi College, |
| | Chandra, Asutosh | . Scottish Churches College |
| | Chattopadhyay, Harendranath | . Bangabasi College, Non-collegiate Student, Roll Cal. N 18 |
| 60 | " Manomohan | .. Presidency College |
| | " Pranaykumar | . City College |
| | " Sailajananda | ... Ditto |
| | " Saktiskumar | .. Scottish Churches College |
| | " Sudhar | . Bangabasi College, Non-collegiate Student, Roll Cal N 25 |
| | Chaudhuri, Himansubimal | .. Chittagong College. |
| | " Jatindramohan | .. Rajshahi College |
| | " Sachimohan | ... Bangabasi College, Non-collegiate Student, Roll Chi N 1 |
| | Das, Amulyakrishna | ... City College, Non-collegiate Student, Roll Cal. No 50. |
| | " Anadimohan | ... K N. College, Berhampur. |
| 70 | " Dinendraprasad | ... Non-collegiate Student, Roll Cal N 1 |
| | " Gobardhan | .. Bangabasi College |
| | " Gopalchandra | ... Vidyasagar College. |
| | " Jagadananda | ... Rajshahi College |
| | " Jugalchandra | .. City College |
| | " Jyotischandra | . Vidyasagar College |
| | " Madhuram | .. Cotton College, Gauhati |
| | " Prabodhchandra | ... City College |
| | " Prasannakumar | .. City College, Non-collegiate Student, Roll Cal N 38 |
| | " Pratapchandra | . Presidency College |
| 80 | " Ramkrishna | .. Bangabasi College |
| | Dasgupta, Jitendranath | ... K. N College, Berhampur, Non-collegiate Student, Roll Ber. N 3. |
| | " Kshitischandra, II | ... Scottish Churches College |
| | " Praphullamohan | ... Presidency College. |
| | " Susilkumar | ... Scottish Churches College |
| | Datta, Amiyakumar | ... City College, Non-collegiate Student, Roll Cal N. 58 |
| | " Asutosh | ... Presidency College, Non-collegiate Student, Roll Cal M. 70 |
| | " Jagabandhu | .. K N. College, Berhampur. |
| | " Kamalkrishna | ... Scottish Churches College. |
| | " Lakshminath | ... Cotton College, Gauhati |
| 90 | " Manoranjan | ... St. Xavier's College |
| | " Rajendranath | ... K. N. College, Berhampur. |
| | " Ramakanta | ... Ditto. |
| | " Satishchandra | ... Bangabasi College. |
| | " Sisirkumar | ... Hughli College. |
| | " Sudhirmohan | ... Presidency College. |
| | " Suryyakumar | ... Bangabasi College |
| | Dattachaudhuri, Lalimohan | ... St. Xavier's College. |
| | Dhar, Kanakkumar | ... Non-collegiate Student, Roll Cal. N. 4. |
| | De, Abanikumar | ... Presidency College. |

| | | |
|---|---|---|
| 100 | De, Dhirendrachandra | St. Xavier's College, Non-collegiate Student, Roll Cal. N 49. |
| | " Janakinath | Scottish Churches College |
| | " Jugalkisor | Hughli College. |
| | " Matindranath | Scottish Churches College |
| | " Sasinath | St Xavier's College. |
| | Gangopadhyay, Jitendralal | Vidyasagar College |
| | " Jnanranjan | Ripon College |
| | " Mahirlal | City College, Non-collegiate Student. Roll Cal N. 54 |
| | Ghosh, Bankimchandra | City College, Non collegiate Student, Roll Cal N 56 |
| | Dwijendrachandra | Non-collegiate Student, Roll Cal N 3. |
| 110 | Hemantakumar | Bangabasi College |
| | Lalbihari | Ditto |
| | Mugdhendusekhar | K N College, Berhampur |
| | Narendranath | St Xavier's College |
| | Nareschandra | Rajshahi College |
| | Pabitrakumar | Presidency College |
| | Prabodhkumar | City College |
| | Sailes | St Xavier's College |
| | Satischandra | Bangabasi College |
| | Satyendranath | Scottish Churches College. |
| 120 | Sudhindranath | City College, Non-collegiate Student, Roll Cal N 61 |
| | " Utpalendranarayan | St Xavier's College |
| | Ghoshbarma, Girijaprasanna | K N. College, Berhampur |
| | Goswami, Mahendra Giri | Rajshahi College |
| | " Sachijiban | Bangabasi College |
| | Guha, Binaykumar | Ditto |
| | " Manishiprasad | City College |
| | Gupta, Abandhu | Scottish Churches College |
| | Guptabhaya, Pabitragobinda | Rajshahi College |
| | Hajarika, Pitambar | Cotton College, Gauhati |
| 130 | Hajra, Binaykrishna | St Xavier's College |
| | " Pasupati | City College |
| | Haldar, Dhirendrakrishna | St Xavier's College |
| | Kanji, Nanilal | Non-collegiate Student, Roll Cal N 42. |
| | Kar, Bhupeschandra | Krishnagar College |
| | " Nahinmohan | Ripon College |
| | Karmakar, Bishnupada | City College, Non-collegiate Student, Roll Cal N 59 |
| | " Madhusudan | Rajshahi College |
| | Kundu, Manindralal | City College |
| | " Saratchandra | K N College, Berhampur |
| 140 | " Srimantakumar | Rajshahi College |
| | " Sukumar Ch | Ripon College |
| | Lahiri Ambikakanta | Ditto |
| | " Ramanath | Hughli College |
| | Mahfuzal Haq | Chittagong College. |
| | Maitra, Manindranath | St Xavier's College |
| | " Sanatkumar | Rajshahi College |
| | Majumdar, Bibhutibhushan | Vidyasagar College |
| | " Birendrachandra | City College |
| | Malik Abdul Bari | Presidency College. |
| 150 | Malik, Karunanath | Ripon College |
| | Mandal, Sudhirkumar | Rajshahi College |
| | Mitra, Amikrishna | Presidency College. |
| | " Bijanbihari | Ditto |
| | " Binaybhushan | City College. |
| | " Binaykumar | K N College, Berhampur |
| | " Jaminikanta | Hughli College |
| | " Kedarnath | Bangabasi College |
| | " Lalgopal | St Xavier's College. |
| | " Nalinbhushan | Vidyasagar College. |
| 160 | " Radhagobinda | K N College, Berhampur |
| | " Sripatinath | Non-collegiate Student, Roll Cal. N. 71. |
| | " Sudhirchandra | Bangabasi College. |
| | Modak, Kamalbandhu | Vidyasagar College. |
| | Mukhopadhyay, Baidyanath | St Xavier's College |
| | " Debdeb | Non-collegiate student, Roll Cal. N. 40. |
| | " Ganeschandra | Scottish Churches College |
| | " Jajneswar | Krishnagar College, Non collegiate Student, Roll Kri. N. 1 |
| | Kalipada | K N. College, Berhampur |
| | Lalitmohan | Bangabasi College. |
| 170 | Mahadeb | Vidyasagar College |
| | Manikial | Cotton College, Gauhati |
| | Manindrachandra | Ripon College |
| | Nandagopal | St Xavier's College |
| | Narendranath | K N College, Berhampur. |
| | Phanibhushan | Bangabasi College |

| | | |
|---|---|---|
| | Mukhopadhyay Prabhaschandra | Scottish Churches College |
| | " Sasibhushan | St. Xavier's College. |
| | " Subodhchandra | Ditto |
| | " Surendranath | Rajshahi College |
| 180 | Nandi, Bidyadhar | City College |
| | " Saradindu | Bangabasi College. |
| | Niyogi, Sukumar | St. Xavier's College |
| | Pal, Banabihari | Scottish Churches College. |
| | " Jitendranath | K. N College, Berhampur. |
| | " Matilal | Rajshahi College, Non-collegiate student, Roll Cal N 1. |
| | " Sailajaprasad | Presidency College |
| | " Santoshkumar | Hughli College |
| | " Satischandra | St Xavier's College |
| | " Sureschandra | Bangabasi College |
| 190 | Palit, Manindramohan | St Xavier's College |
| | Pramanik, Mahadeb | Ditto. |
| | Raha, Surendrakumar | Bangabasi College, Non-collegiate Student, Roll Cal N 13 |
| | Rakshit, Bodhendubikas | Bangabasi College. |
| | Ray, Basantakumar | Scottish Churches College. |
| | " Durgacharan | Non-collegiate student, Roll Cal. N. 2 |
| | " Gauriprasanna | K N College, Berhampur |
| | " Girindrakumar | Chittagong College |
| | " Haripada | Rajshahi College. |
| | " Jitendranath | K. N. College, Berhampur. |
| 200 | " Jogeschandra | Rajshahi College. |
| | " Kanailal | Scottish Churches College, Non-collegiate Student, Roll Cal N 35. |
| | " Praphullamohan | Rajshahi College. |
| | " Samiran | Cotton College, Gauhati |
| | " Sudhakanti | Rajshahi College |
| | Raychaudhuri, Rameschandra | City College |
| | " Sureschandra | St Xavier's College |
| | Sadhya, Tarakchandra | Rajshahi College |
| | Saha, Bidhubhushan | City College |
| | " Charuchandra | Scottish Churches College |
| 210 | " Khagendranath | City College |
| | " Sarboswar | Ripon College |
| | Sanyal, Anantalal | St Xavier's College |
| | Sarkar, Binaykrishna | Rajshahi College. |
| | " Durgamohan | Presidency College |
| | " Kalikrishna | Rajshahi College. |
| | " Mahitosh | City College, Non collegiate Student, Roll Cal. N 62. |
| | " Prithwinarayan | Scottish Churches College, Non-collegiate Student, Roll Cal. N 37 |
| | Sarma, Dibakar | Cotton College, Gauhati. |
| | " Kandarpanath | Ditto |
| 220 | Sen, Dwijendranath | City College, Non collegiate Student, Roll Cal N 60 |
| | " Manibhushan | Scottish Churches College. |
| | " Nirmalchandra | Presidency College. |
| | " Sumitbhushan | City College. |
| | Sengupta, Birendrachandra | Vidyasagar College |
| | " Harisadhan | Scottish Churches College. |
| | " Hrishikes | Rajshahi College |
| | " Satyaranjan | Bangabasi College |
| | " Sudhansusekhar | K N College, Berhampur |
| | " Upendranath | Presidency College |
| 230 | Shaw, Bimalchandra | Vidyasagar College |
| | Sinha, Anilkrishna | Vidyasagar College |
| | " Bijankumar | K N College, Berhampur. |
| | " Biresh Dutta | Bangabasi College |
| | " Jogendranath | City College |
| | " Rabindranath | Bangabasi College |
| | Sunkavalli Venkata Subba Rayudu | St. Xavier's College |
| | Sur, Dhirendranath | City College. |
| 238 | Walter Singh | Scottish Churches College |

The undermentioned candidate, who was allowed to appear at the B. Sc. Examination, 1923, in one subject, is declared to have passed in the subject.

CHEMISTRY (HONOURS).

*Class II.*

| | |
|---|---|
| Bhattacharyya, Kamalacharan | Non-collegiate Student, Roll Cal. N. 73. |

A. C. BOSE, *Controller of Examinations.*

SENATE HOUSE, *the 4th July 1923.*

## ORDERS BY THE VICE-CHANCELLOR AND SYNDICATE OF THE UNIVERSITY OF CALCUTTA.

THE undermentioned candidates are declared to have passed the Intermediate Examination in Arts, 1923:—

FIRST DIVISION

*(In order of merit.)*

| | | |
|---|---|---|
| 1 | *Bhattacharyya, Asoknath (SLMV) | Presidency College |
| 2 | *Ghosh, Prabodhchandra (LM) | Barisal B M College. |
| 3 | *Majumdar, Nirmalkanti (SM) | Presidency College |
| 4 | *Mitra, Chandrasekhar (SLMV) | Presidency College |
| 5 | *Datta, Arunchandra (LM) | Scottish Churches College |
| 6 | *Basu, Bibhutibhushan (SLM) | Faridpur Rajendra College |
| 7 | *Mukhopadhyay, Bimalprasad (SV) | Presidency College |
| | *Mukhopadhyay, Hemchandra (EL) | Serampur College |
| 9 | *Chaudhuri, Sudhansukumar (LM) | St Paul's College |
| 10 | *Mitra, Rabindrakumar (SMC) | Krishnagar College |
| 11 | *Chatterjee, Bani (Bot) | Bethune College |
| | *Rui, Jibankrishna (LM) | St Paul's College |
| 13 | *Das, Adharchandra (M) | Sylhet M C College |
| 14 | *Md Ismail (AM) | Presidency College |
| 15 | Bhattacharyya, Susilkumar (VSL) | Chittagong College |
| 16 | Pal, Tarapada (SLM) | K N College, Berhampur |
| 17 | Mahommed Sultan (M) | Cotton College, Gauhati. |
| 18 | Mukhopadhyay, Asitkrishna | Scottish Churches College |
| 19 | Basak, Mahendralal (SLM) | Chittagong College |
| 20 | Sajedul Hoq (SM) | Comilla Victoria College |
| 21 | De, Bankimchandra (LM) | Anandamohan College, Mymensingh |
| 22 | Mukhopadhyay, Durgadas (MC) | Barisal B M College |
| 23 | Ray, Bholanath (M) | K N College, Berhampur |
| | Sanyal, Amiyakumar (M) | Scottish Churches College |
| | Sarkar, Hirendranath (M) | Presidency College |
| 26 | Chakrabarti, Sudhirendu (S) | Pabna Edward College |
| 27 | Bhattacharyya, Ramapati (LM) | K N College, Berhampur |
| 28 | Gupta, Phabhatchandra (VM) | Sylhet M C College |
| 29 | Biswas, Asitkumar (VS) | Krishnagar College |
| 30 | Mitra, Prabhakar (M) | Comilla Victoria College. |
| | Nath, Jnaneschandra (M) | Victoria College, Cooch-Behar. |
| 32 | Bhattacharyya, Ramendranath | Comilla Victoria College |
| | Ray, Suphala | Bethune College. |
| 34 | Adikari, Kisorimohan (SM) | City College |
| | Bandyopadhyay, Sisirkumar (SM) | Scottish Churches College. |
| | Mitter, Irene S. (M) | Bethune College |
| 37 | Ghosh, Dineschandra (M) | Scottish Churches College |
| 38 | Das, Sudhendukumar | Anandamohan College, Mymensingh. |
| | Sen, Binodchandra (H) | Non-Collegiate Student, Roll Cal. N 96 Central College. |
| 40 | Mukhopadhyay, Ramkrishnagopal (VSM) | Presidency College |
| 41 | Chattopadhyay, Sibranjan (M) | Ripon College |
| 42 | Hajra, Ajitkumar | South Suburban College |
| 43 | Gomes, Elsie A. | Loreto House |
| 44 | Bhaumik, Jnanendranath | Victoria College, Cooch-Behar. |
| 45 | Ray, Harigopal (SM) | Krishnagar College. |
| 46 | Bhar, Praphulladhan† (S) | Hughli College. |
| | Ray, Santoshkumar (L) | Scottish Churches College |
| 48 | Ghosh, Rajendrakumar (M) | K N College, Berhampur |
| 49 | Das, Jaladbaran (M) | Hetampur Krishna Chandra College. |
| 50 | Das, Nilratan (H) | Daulatpur Hindu Academy. |
| | Guha, Bibhuranjan | Faridpur Rajendra College.. |
| 52 | Mukhopadhyay, Amritalal (M) | Cotton College, Gauhati. |
| 53 | Bhaumik, Bhabeschandra | Victoria College, Cooch-Behar |
| | Chaudhuri, Paresnath (M) | Anandamohan College, Mymensingh. |
| 55 | Majumdar, Bimalkanti | South Suburban College. |
| 56 | Linton, Grace A. G. (H) | Diocesan College. |
| 57 | Dasgupta, Dwijendranath (M) | Scottish Churches College. |

† Non-Collegiate in French.

| | | |
|---|---|---|
| 58 | Bagchi, Jitendranath | Presidency College. |
| | Kundu, Lachminarayan (M) | Burdwan Raj College. |
| 60 | Dasgupta, Girischandra | Narail Victoria College. |
| | Eastment, Terence | St. Xaviers College. |
| 62 | Bhattacharyya, Syamacharan (H) | Sanskrit College. |
| | Majumdar, Saurindranath | Rajshahi College |
| 64 | Bandyopadhyay, Saradindu | K N College, Berhampur. |
| 65 | Kar, Manoranjan | Non-Collegiate Student, Roll Bag. N. 1 Bagerhat College |
| 66 | Chakrabarti, Sarojkumar (S) | Barisal B. M College |
| | Datta, Monicashobhana | Bethune College |
| | Tara Ullah | Sylhet M. C. College |
| 69 | Bhattacharyya, Pareschandra (M) | Comilla Victoria College |
| 70 | Abul Farah Oli Ahmed (C) | Barisal B M. College. |
| | Ghosh, Mrinalkumar | Ripon College. |
| 72 | Chattopadhyay, Mahimapada (M) | Hetampur Krishna Chandra College. |
| | Bandyopadhyay, Umapada | Burdwan Raj College. |
| 73 | Guha, Manoranjan (V) | Non-Collegiate Student, Roll Cal. N. 5. |
| | Sarkar, Jaychand (M) | Burdwan Raj College. |
| 76 | Chakrabarti, Bhupaticharan | Sanskrit College |
| | Gangopadhyay, Haralal (M) | Anandamohan College, Mymensingh. |
| 78 | Deb, Amulyacharan | Comilla Victoria College |
| 79 | Chakrabarti, Kamalendu | Scottish Churches College |
| 80 | Chakrabarti, Nimaicharan (M) | Hughli College. |
| | Chaudhuri, Manoranjan, I | Comilla Victoria College |
| 81 | Ghoshal, Sudhansubhushan | Presidency College. |
| | Waikhom Chowba Singh (M) | Cotton College, Gauhati. |
| | Dasgupta, Loknath (L) | Non-Collegiate Student, Roll Far N 13 Rajendra College. |
| 84 | Joshi Chayan | St Paul's College. |
| | Sen, Chittaranjan | Presidency College |
| | Thakur, Nalinaksha | City College |
| | Dasgupta, Prabhasnalini | Bethune College. |
| | Guha, Manindranath | Pabna Edward College. |
| | Nandi, Asutosh (M) | Hughli College. |
| | Ray, Subodkhumar | St Xavier's College. |
| | Sarkar, Bhupendranath | Bangabasi College |
| | Majumdar, Kamalaksha (SM) | Hetampur Krishna Chandra College. |
| | Basu, Birendranath | Narail Victoria College. |
| 94 | Chatterjee, Malatilata | Bethune College. |
| | Lahiri, Rebatimohan | Rajshahi College |
| | Sengupta, Sudhirkumar | Barisal B. M. College. |
| | Das, Praphullachandra | Sylhet M. C College. |
| | Sen, Lalabati | Bethune College. |
| | Kundu, Balaichand (Bot) | South Suburban College. |
| | Mitra, Syamapada (M) | City College. |
| | Munsi, Hemkanti (M) | Scottish Churches College. |
| | Sayed Faratali (M) | St. Xavier's College. |
| | Kar Nirendranath (M) | Scottish Churches College. |
| 105 | Bhattacharyya, Birajanath | Sylhet M C College |
| | Mitra, Subaskumar (M) | Scottish Churches College. |
| | Chakrabarti, Kalipada | Vidyasagar College |
| 107 | Cromelin | Sylhet M C College |
| | Datta, Pramathanath (M) | Narail Victoria College |
| | Mukhopadhyay, Sachindranath (M) | Faridpur Rajendra College |
| | Bhattacharyya, Indubhushan | Sylhet M C College |
| | Mukhopadhyay, Baikuntha | St Paul's College |
| 113 | Mitra, Subimalchandra (M) | City College |
| | Ray, Manindranath (M) | Carmichael College, Rangpur. |
| | Chakrabarti, Durgasaran (S) | City College |
| | Guhabarma, Harendrachandra (L) | Faridpur Rajendra College |
| 117 | Sen, Amarnath | Sylhet M C. College |
| | Konjegbam Goura Singh (M) | Cotton College, Gauhati |
| 119 | Chakrabarti, Kamalapati | K. N College, Berhampur. |
| | Sengupta, Adhirchandra (M) | Faridpur Rajendra College |
| | Das, Munindrakumar (V) | Sylhet M C College. |
| | Chakrabarti, Ajitchandra | Presidency College. |
| | Alexandar, A. J. (HL) | St Paul's College. |
| | Bandyopadhyay, Nirmalchandra | Non-Collegiate student, Roll Bag. N. 2. Bagerhat College. |
| | Ray, Renuka | Loreto House |
| | Ghosh, Manindranath | Presidency College. |
| | Gupta, Dhirendranath | Barisal B M College. |
| | Raychaudhuri, Sachindranath | St. Xavier's College. |
| | Syed Abdul Goni | Sylhet M. C. College. |

| | | |
|---|---|---|
| | Bhattacharyya, Harendrachandra ... | Krishnagar College. |
| | Chakrabarti, Rajendranath (M) .. | Barisal B M College |
| 130 | Majumdar, Ratischandra ... | Barisal B. M College |
| | Mitra, Prakaschandra ... | St Paul's College. |
| | Ray, Sisirkumar ... | Scottish Churches College |
| | Bhattacharyya, Siteschandra (M) | Victoria College, Cooch-Behar |
| | Chattopadhyay, Phanibhushan | Barisal B. M College |
| | Sarkar, Sailendranath .. | Non-Collegiate Student, Roll Cal N 274 South Suburban College. |
| | Md. Abdus Samad, III (M) | Anandamohan College, Mymensingh. |
| | Chakrabarti, Sudhirkumar .. | Serampur College. |
| | Ghosh, Tapendrachandra .. | Scottish Churches College. |
| | Mallik, Labanyaprobha ... | Bethune College. |
| | Mukhopadhyay, Satindrakumar | Barisal B M College |
| | Nag, Rasbihari . | K N College, Berhampur |
| | Ray, Sukumar .. | Anandamohan College, Mymensingh. |
| | Bhattacharyya, Dhirendrachandra | Anandamohan College, Mymensingh. |
| | Chaudhuri, Manoranjan, II | Comilla Victoria College. |
| | Kowar, Sambhunath | Carmichael College, Rangpur |
| | Maiti, Amarendranath | Midnapur College |
| | Bhattacharyya, Kamakhyacharan | Ripon College |
| | Ghosh, Rameschandra | Faridpur Rajendra College |
| | Mukhopadhyay, Tarakumar . | Presidency College |
| | Gangopadhyay, Haricharan | Daulatpur Hindu Academy |
| | Sur, Dhaneschandra (M) | Scottish Churches College |
| | Das, Jaminibhushan . | Daulatpur Hindu Academy |
| | Nag, Sudhira (H) | Non-Collegiate Student, Roll Cal F N. 2. |
| | Sen, Nalinkrishna . | Scottish Churches College |
| | Sordor, Bimalkumar (M) | St Paul's College |
| | Thakur, Bijaykrishna . | Daulatpur Hindu Academy |
| | Banik, Umeschandra | Rajshahi College |
| | Chattopadhyay, Dhirendranath (M) | K N. College, Berhampur |
| | Datta, Kalikinkar . | K N College, Berhampur |
| | Hashmat Ali Chowdhury | Chittagong College |
| | Lahiri, Satyaranjan . | K N College, Berhampur |
| | Sil, Satischandra . | Faridpur Rajendra College |
| | Basu, Debkumar .. | Presidency College |
| | Das, Indubhushan (M) | Presidency College |
| | Ray, Ramgobind | Bangabasi College |
| | Chaudhuri, Prabhakar (M) | Bankura Wesleyan College |
| 168 | Majumdar, Rebatiraman . | Non-Collegiate Student, Roll Chi N 21 Chittagong College |
| | Kalidindyasubha Raju | South Suburban College |
| | Mukhopadhyay, Anandamay | Burdwan Raj College |
| | Sen, Madhabcharan . | Barisal B M. College |
| | Datta, Sachindrakumar | Ripon College. |
| | Poddar, Ambikacharan (M) | Barisal B M College. |
| | Sinha, Jatibhushan | K N College, Berhampur. |
| | Das, Lalitmohan | Daulatpur Hindu Academy |
| | Guha, Praphullaranjan (H) | St Paul's College |
| | Shamsuddin Ahmed (M) | Anandamohan College, Mymensingh. |
| | Sen, Bholanath . | Presidency College |
| | Chattopadhyay, Gobindalal | Comilla Victoria College |
| | Sarkar, Bijaykrishna . | Narail Victoria College |
| | Syed Mohammad Taher (V) . | Ripon College. |
| | Manna, Bhajahari .. | St Paul's College |
| | Rojindro Rangslang | Cotton College, Gauhati |
| | Sukur Uddin Ahmed (M) | K N College, Berhampur |
| | Basu, Birendranath . | St Xavier's College |
| 186 | Chattopadhyay, Tarapada . | K N College, Berhampur |
| | De, Mritunjay (M) | Burdwan Raj College. |
| | Bhattacharyay, Surendranath | Bagerhat College |
| | Bandyopadhyay, Sambhuchandra | Bangabasi College. |
| | Rejan Ali .. | Sylhet M C College |
| | Chaudhuri, Ganganarayan . | City College |
| | Sengupta, Lalitmadhab | Scottish Churches College |
| 194 | Bandyopadhyay, Narendranath | St Paul's College |
| | Datta, Sachindranath | Berhampur K. N College. |
| | Abdul Wadud, I . | Comilla Victoria College |
| | Bagchi, Sibakali | Ananda Mohan College, Mymensingh |
| 196 | Bhattacharyya, Haripada (M) | K N College, Berhampur |
| | Chaudhuri, Binaykrishna | K N College, Berhampur |
| | Das, Satyendranath | Sylhet M C College |
| | Rudra, Latika (H) | Diocesan College. |

| | | |
|---|---|---|
| 202 | Md. Eshaqueddin Mian (M) | Rajshahi College. |
| | Senmajumdar, Nirmalchandra | City College. |
| 204 | Ghosh, Manindramohan | Comilla Victoria College. |
| | Sil, Amarlal | Barisal B. M. College. |
| | Anthony, Beatrice Mary | Loreto House. |
| 206 | Bhattacharyya, Debendranath | Narail Victoria College. |
| | Chakrabarti, Charuchandra | Vidyasagar College. |
| | Das, Aswinikumar | Sylhet M. C. College. |
| 210 | Das, Kshitischandra (M) | Cotton College, Gauhati. |
| | Majumdar, Surendrakumar | Narail Victoria College. |
| 212 | Ayenulla Mandal | Carmichael College, Rangpur. |
| 213 | Bandyopadhyay, Kartikchandra | Barisal B. M. College. |
| | Datta, Srischandra | Sylhet M C College. |
| | Datta, Subodhkumar | Sylhet M C. College. |
| 215 | Mukhopadhyay, Kshudiram | K N College, Berhampur |
| | Som, Haripada (M) | Scottish Churches College |
| | Bairagi, Nirmal Santi | Diocesan College |
| 218 | Das, Satischandra, I (M) | Carmichael College, Rangpur. |
| | Raghunath Prasad | South Suburban College. |
| | A. K. M Mujeebur Rahman (V) | Comilla Victoria College |
| | Chakrabarti, Debendranath | Ripon College |
| | Ghosh, Niharbala | Bethune College |
| 221 | Goswami, Rajanikanta | Cotton College, Gauhati |
| | Hajra, Patitpaban | City College |
| | Lahiri, Sudhirranjan | Carmichael College, Rangpur |
| | Majumdar, Sunilranjan | Sylhet M C College |
| | Sil, Rebatikumar | Barisal B M College |
| 229 | Basu, Manindranath | Presidency College. |
| | Basu, Ramanimohan (M) | Barisal B M College |
| | Bhattacharyya, Haripada | Bankura Wesleyan College |
| | Ghosh, Gauricharan | Ripon College |
| | Basu, Nirmalchandra | Scottish Churches College |
| | Bhattacharyya, Gishpati (V) | Hughli College |
| | Das, Chandrabinod | Sylhet M. C College |
| | Das, Chittaranjan | Sylhet M C College |
| | Dasgupta, Saurindramohan | Narail Victoria College. |
| | Ghosh, Bijaykumar | Barisal B. M College |
| | Ray, Surendranath | K N College, Berhampur |
| | Saha, Surendramohan | Pabna Edward College |
| | Santra, Saurendramohan | Presidency College. |
| 242 | Acharyya, Nityahari | Comilla Victoria College. |
| | Goswami, Bimalcharan (M) | Midnapur College |
| 244 | Insan Bhuiya | Anandamohan College, Mymensingh. |
| | Chakrabarti, Janakinath | Comilla Victoria College. |
| | Chaudhuri, Tarapada | South Suburban College |
| | Sinha, Basantakumar | Scottish Churches College |
| | Abdul Wahed | Sylhet M C College. |
| | Bandyopadhyay, Sambhunath | Presidency College. |
| 248 | Bhattacharyya, Balaichand | Vidyasagar College. |
| | Chakrabarti, Pramathanath | Vidyasagar College |
| | Gangopadhyay, Khagendranath | Faridpur Rajendra College. |
| | Basu, Syamadhaba | Presidency College. |
| | Chakrabartti, Anilkumar | St Paul's College |
| | Chattopodhyay, Hemchandra (L) | Bankura Wesleyan College |
| 253 | Debnath, Surendrachandra | Non-Collegiate Student, Roll Cal N 294. Vidyasagar College. |
| | Kelly, Ivy | Loreto House |
| | Mallik, Girijananda | Non-Collegiate Student, Roll Cal N 116. |
| 259 | Basu, Krishnagopal | Krishnagar College. |
| | Chattopadhyay, Bijalimohan | Presidency College. |
| | Kar, Rohinikumar | Chittagong College. |
| | Sen, Pasupati | Presidency College. |
| 263 | Das, Trailokyanath | Bangabasi College. |
| | Ghosh, Saratchandra | Bankura Wesleyan College. |
| | Abdur Rashid | Comilla Victoria College. |
| | Bhattacharyya, Rajendranath | Non-Collegiate Student, Roll Nar. N. 3. Narail Victoria College. |
| 265 | Datta, Amulyabhushan | Sylhet M. C. College. |
| | Nag, Premananda | Scottish Churches College. |
| | Sailendrakrishna Deosinha | Bangabasi College. |
| 270 | Acharyyachaudhuri, Rajendranarayan | South Suburban College. |
| | Barmanray, Pulinbihari | Comilla Victoria College. |

| | | |
|---|---|---|
| | Dasgupta, Susilchandra | Barisal B. M. College. |
| 270 | Ghosh, Syamapada | Scottish Churches College. |
| | Sinha, Santoshkumar | Scottish Churches College. |
| | Basu, Birendranath | Scottish Churches College |
| | Bhattacharyya, Asutosh | Rajshahi College. |
| 275 | Esther Mulchand Dube | Non-Collegiate Student, Roll Cal F N. 3. |
| | Gangopadhyay, Sasankamohan | Victoria College, Cooch-Behar. |
| | Saha, Debendranath | Rajshahi College. |
| | Bhattacharyya, Amarendranath | Sylhet M. C. College. |
| 280 | Chakrabarti, Jitendranath | Barisal B. M. College |
| | Pal, Bholanath | K N College, Berhampur. |
| | Sengupta, Jogendranath | City College. |
| 284 | Basu, Nanigopal | Krishnagar College. |
| | Naha, Surendrachandra | Anandamohan College, Mymensingh. |
| | Bhattacharyya, Dineswar | Non-Collegiate Student, Roll Rang. N 1 Carmichael College |
| 286 | | |
| | Mukhopadhyay, Haramohan | Victoria College, Cooch-Behar. |
| | Bandyopadhyay, Manoranjan | Non-Collegiate Student, Roll Cal N. 70 Vidyasagar College. |
| 288 | Chakrabarti, Jnanendramohan | Comilla Victoria College |
| | Sarkar, Ashalata | Bethune College |
| 291 | Pal, Radhasyam | City College. |
| | Raychaudhuri, Saurindranarayan | Comilla Victoria College |
| | Bandyopadhyay, Indubhushan | Barisal B M College |
| | Chakrabarti, Jnanendraprasad | Non-Collegiate Student, Roll Nar N 5 Narail Victoria College |
| 293 | Ray, Bhabananda | K N College, Berhampur |
| | Rudra, Premtosh | Daulatpur Hindu Academy |
| | Saha, Purnachandra | Narail Victoria College |
| | Sarkar, Matilal | Pabna Edward College |
| | Thakur, Tosheswar | Cotton College, Gauhati |
| | Acharyya, Durgapada | K N College, Berhampur |
| | Chaudhuri, Haripada | Hetampur Krishna Chandra College |
| | Ghosh, Manimohan | Barisal B M. College. |
| 300 | Majumdar, Rabindramohan | City College |
| | Mukhopadhyay, Harikumar | St Paul's College |
| | Sengupta, Hemendraprasad | Non-Collegiate Student, Roll Bar N 33 Barisal B H College |
| | Shamsud Din Ahmed | Sylhet M C College |
| 307 | Das, Indubhushan | Narail Victoria College. |
| | Rakshit, Harihar | Comilla Victoria College |
| | Sarkar, Dorashobhana | Bethune College |
| 310 | Datta, Bibhutibhushan | Hughli College |
| | Sau, Bhudharchandra | Hetampur Krishna Chandra College |
| | Sur, Prabhatkumar | St Paul's College |
| | Bandyopadhyay, Binaybhushan | Scottish Churches College |
| | Bhatta, Surendranath | City College. |
| | Chakrabarti, Bhubanmohan | Vidyasagar College |
| 313 | Deb, Manindrachandra | Comilla Victoria College |
| | Gun, Jyotischandra | Victoria College, Cooch-Behar |
| | Gupta, Sushama | Diocesan College |
| | Raychaudhuri, Mahendrakumar | Scottish Churches College |
| 320 | Fazler Rahman Sarkar | Rajshahi College |
| | Dasgupta, Narendranath | City College |
| | Dattagupta, Sudhibhushan | Non-Collegiate Student, Roll Com. 15. Comilla Victoria College |
| | Mallik, Jyotischandra (M) | Krishnagar College |
| 321 | Md. Ashraffali Khan | Faridpur Rajendra College |
| | Mukhopadhyay, Nepalchandra | Sanskrit College |
| | Ray, Saurendranath | K. N. College, Berhampur |
| | Sinha, Bishnudas | Hetampur Krishna Chandra College |
| | Sinharay, Debabrata | Comilla Victoria College. |
| | Bandyopadhyay, Niranjan | Krishnagar College. |
| | Bhattacharyya, Nakari | Carmichael College, Rangpur |
| | Gupta, Jitendrakumar | Sylhet M. C College. |
| 329 | Mir Hossain | Comilla Victoria College |
| | Sarkar, Prabhatkumar | South Suburban College |
| | Sengupta, Harabhushan | Barisal B. M College |
| | Tafazzal Hossain | Carmichael College, Rangpur |
| | Basu, Nalinbihari (M) | South Suburban College. |
| 336 | Datta, Khagendranath | Daulatpur Hindu Academy |
| | Khatua, Bijaykrishna | Scottish Churches College. |

| | | |
|---|---|---|
| | Bhattacharyya, Prabhatchandra | Comilla Victoria College. |
| | Majumdar, Atindranath | Barisal B. M. College. |
| 339 | Pandit, Tarinikamal (M) | Cotton College, Gauhati. |
| | Ray, Trailokyanath | K. N. College, Berhampur. |
| | Razab Ali Sarkar | Pabna Edward College. |
| | Bandyopadhyay, Prasunkumar | Presidency College. |
| | Bhattacharyya, Sureschandra | Comilla Victoria College |
| 344 | Chattopadhyay, Nripendrakrishna | Non-Collegiate Student, Roll Cal N. 218 City College. |
| | Howell, B. S. | Scottish Churches College. |
| | Md. Feroze Ahamed | Chittagong College. |
| | Samaddar, Dineschandra | Barisal B. M. College. |
| 350 | Ghosh, Tariniprasad (M) | K. N. College, Berhampur |
| | Mahadeo Balvant Bhane | Non-Collegiate Student, Roll Cal N 117 |
| | Mahammad Khalilur Rahman Chowdhury | Comilla Victoria College |
| | Md. Muzharul Hoque | Comilla Victoria College |
| | Sarkar, Amareschandra | Presidency College. |
| | Chakrabarti, Dineschandra | Pabna Edward College. |
| 355 | Chattopadhyay, Suhridkumar | Non-Collegiate Student, Roll Ber. N 5 K. N. College. |
| | Das, Manindranath | Daulatpur Hindu Academy |
| | Abdul Waheb | Sylhet M. C. College |
| 358 | Chattopadhyay, Sudhirchandra | Victoria College, Cooch-Behar |
| | Ray, Arunkanti | Daulatpur Hindu Academy |
| | Ghosh, Tapankumar | Scottish Churches College |
| | Haldar, Phakirchandra | K. N. College, Berhampur |
| 361 | Mukhopadhyay, Narendranath | City College |
| | Nazifur Rahman (M) | Cotton College, Gauhati |
| | Syed Ismail | Anandamohan College, Mymensingh |
| | Bandyopadhyay, Praphulla-chandra | Barisal B. M. College |
| 366 | Karati, Prahladchandra | Barisal B. M. College |
| | Mukhopadhyay, Sailendramohan | Presidency College. |
| | Ray, Dilipkumar | Presidency College |
| | Bandyopadhyay, Kalidas | Scottish Churches College |
| | Chakrabarti, Janardan | Comilla Victoria College |
| 370 | Chakrabarti, Pramodranjan | Comilla Victoria College |
| | Maitra, Prabodhchandra | Pabna Edward College |
| | Sarkar, Kshitischandra | Daulatpur Hindu Academy |
| | Sur, Atulkrishna | Scottish Churches College |
| | Biswas, Gaurchandra | Pabna Edward College |
| 376 | Kazi Abdul Wazed | Barisal B. M. College |
| | Mukhopadhyay, Indubhushan | City College |
| | Ray, Narendranath | Non-Collegiate Student, Roll Bar N 4 B. M. College. |
| | Chakrabarti, Upendranath | Bagerhat College |
| | Chakrabarti, Harendrachandra | Comilla Victoria College |
| 380 | Datta, Niharranjan | Sylhet M. C. College |
| | Daniels, Lois Evelyan | Diocesan College |
| | Majumdar, Haridas | Victoria College, Cooch-Behar |
| | Sarkar, Bonolata | Non-Collegiate Student, Roll Mid F N 1 |
| | Bhattacharyya, Susilkumar | Krishnagar College |
| | Biswas, Bijaygopal | Narail Victoria College |
| 386 | Ghosh, Rameschandra | Comilla Victoria College |
| | Pal, Dhirendralal | Victoria College, Cooch-Behar |
| | Sen, Lalmohan | Scottish Churches College. |
| | Seagupta, Sudhansukumar | Barisal B. M. College. |
| 392 | Bhattacharyya, Golokbihari | South Suburban College. |
| | Mukhopadhyay, Kritibas (M) | Bankura Wesleyan College |
| | Mitra, Brinanbihari (M) | Presidency College. |
| | Mujibur Rahman Chaudhury | Sylhet M. C. College. |
| 396 | Chaudhuri, Debendrachandra | Ananda Mohan College, Mymensingh |
| | Datta, Haripada | City College. |
| | Ghoshal, Kartikchandra | Ananda Mohan College, Mymensingh |
| | Mukhopadhyay, Hemendranath | Barisal B. M. College. |
| | Mukhopadhyay, Sureschandra | Ripon College |
| | Sinha, Sadhusaran. | St. Xavier's College. |
| | Changkakati, Praphullaran | Cotton College, Gauhati. |
| | Chattopadhyay, Aswinikumar | Krishnagar College. |
| 400 | Datta, Karunakana | Bethune College. |
| | Devapriyawali Singha | Presidency College. |
| | Maiti, Bisweswar | Presidency College. |

| | | |
|---|---|---|
| | Adhikari, Baidyanath | Krishnagar College |
| | Bandyopadhyay, Atulchandra. | Non-Collegiate Student, Roll Com. N 11. Victoria College, Comilla. |
| 407 | Jesaratulla Sarkar | Carmichael College, Rangpur |
| | Mukherjee, Rameswar | St Paul's College |
| | Sarmabarbara, Nakulchandra | Cotton College, Gauhati. |
| | Dasgupta, Hemendubikas | Chittagong College |
| | Hafizuddin Ahmad | Comilla Victoria College |
| 412 | Mohamed Abdul Majid | St Xavier's College |
| | Sarkar, Praphullakumar | Presidency College. |
| | Sen, Bholanath | K N College, Berhampur |
| 417 | Bhattacharyya, Narendranath | Scottish Churches College |
| | Chakrabarti, Manoranjan | City College |
| | Ghosh, Bijaykrishna | City College |
| | Ray, Bhupendrakumar | Comilla Victoria College |
| 421 | Datta, Santoshkumar | Scottish Churches College |
| | Sengupta, Dwijendranath | Barisal B. M. College |
| 423 | Das, Lakshmikanta | Bagerhat College |
| | Putatunda, Janardan | Barisal B M College |
| | Basu, Sunilkumar | Ripon College. |
| 425 | Ghosh, Tinkari | Vidyasagar College |
| | Ghosh, Adyanath | Narail Victoria College |
| 428 | Bhaumik, Bijaykrishna | Daulatpur Hindu Academy |
| | Saha, Hirendrachandra | Comilla Victoria College |
| | Sarmadhikari Chandrabhushan | Comilla Victoria College |
| 431 | Acharyya, Jatindranath | Barisal B M College |
| | Karanja, Mahendralal | Barisal B M College |
| | Mustaphi, Krishnaprasad | South Suburban College |
| 434 | Chakrabarti, Kshitischandra | Comilla Victoria College. |
| | Ghosh, Prabhakar | Scottish Churches College |
| | Majumdar, Bibhutikumar | South Suburban College |
| | Nath, Radhagobinda | Comilla Victoria College |
| | Syed Amin Ullah | City College |
| 439 | Barbaruya, Sasichandra | Cotton College, Gauhati |
| | Bhattacharyya, Gurjabhushan | Comilla Victoria College |
| | Biswas, Bhabeschandra | Pabna Edward College |
| | Gangopadhyay, Jitendrachandra | Ripon College |
| | Ghosh, Dhirendranath | Bagerhat College |
| | Mitra, Kisorilal | South Suburban College |
| | Niyogi, Jogendranarayan | Cotton College, Gauhati |
| | Sen, Saileschandra | Victoria College, Cooch-Behar |
| | Basu, Sudhirchandra | Scottish Churches College |
| 447 | Majumdar, Rebatimohan, II | Comilla Victoria College |
| | Majumdar, Saratchandra | Comilla Victoria College |
| | Ray, Atulchandra | Faridpur Rajendra College |
| | Syed Aolad Hussain | Sylhet M C College |
| 452 | Bandyopadhyay, Amitabhakumar | Scottish Churches College |
| | Deb, Rameschandra | Sylhet M C College |
| | Gupta, Balaiprasad | K N College, Berhampur |
| | Sarkar, Anilkumar | Presidency College. |
| 456 | Abu Ensofe | St Xavier's College |
| | Datta, Suklal | Daulatpur Hindu Academy |
| | Dattaray, Asutosh | Non-Collegiate Student, Roll Cal N 189 Vidyasagar College |
| | Hajra, Ratanchandra | Midnapur College |
| | Lahiri, Haridaschandra | Non-Collegiate Student, Roll Cal N 187 S. S College |
| | Ray, Kamakhyacharan | K. N. College, Berhampur |
| 462 | Bandyopadhyay, Kalipada | Barisal B M. College |
| | Ghosh, Nirmalchandra | Comilla Victoria College |
| | Mohammad Sham Sazzoha | Pabna Edward College |
| | Mukhopadhyay, Jatindranath | Serampur College |
| | Samaddar, Satischandra | Bagerhat College |
| | Bhattacharyya, Satyanarayan | K. N College, Berhampur. |
| | Bujarbaruya, Durgaprasad | Cotton College, Gauhati. |
| | Guha, Madhusudan | Barisal B M College |
| 467 | Mukhopadhyay, Amarnath | Non-Collegiate Student, Roll Bur N 6 Raj College. |
| | Sen, Pratima | Bethune College |
| | Syed Abdul Majid | Cotton College, Gauhati |
| 473 | Biswas, Kritantakumar | Pabna Edward College |
| | Mahammad Ishaque, II (Agihooni) | Sylhet M C. College. |

| | | |
|---|---|---|
| 475 | Basu, Nalinibhushan | Bagerhat College. |
| | Bhattacharyya, Anadinath | Barisal B. M. College. |
| | Chakrabarti, Jnanadacharan | Comilla Victoria College. |
| | Chaudhuri, Asutosh | Presidency College. |
| | Dinker, F | Non-Collegiate Student, Roll Cal. F N. 6 |
| | Hajarika, Sarojbala | Diocesan College. |
| | Mandal, Sasadhar, II | Hetampur Krishna Chandra College |
| | Sarkar, Surendranath (M) | Non-Collegiate Student, Roll Far N 14 Rajendra College. |
| 483 | Arekapudi Ramanadham | Vidyasagar College. |
| | Biswas, Jatindranath | Daulatpur Hindu Academy |
| | Chaudhuri, Umeschandra | Chittagong College |
| 486 | Bandyopadhyay, Prankumar | St. Paul's College. |
| | Basu, Sukumar | St Paul's College. |
| | Biswas, Bisweswar | Chittagong College |
| | Chattopadhyay, Kalipada | Burdwan Raj College |
| | Chaudhuri, Jatindrakumar (M) | Comilla Victoria College. |
| | Datta, Labanya | Bethune College |
| | Goswami, Sasikanta | Cotton College, Gauhati. |
| | Harihara Panda | K N. College, Berhampur. |
| | Lahiri, Hridayranjan | Scottish Churches College |
| | Shaikh Khabiruddin Ahamed | Victoria College, Cooch-Behar |
| 496 | Biswas, Nityananda | Bagerhat College |
| | Hajarika, Jogendranath | Cotton College, Gauhati |
| | Raychaudhuri, Sulapani | K N. College, Berhampur |
| 499 | Ahammed Ali Khan | Barisal B. M College |
| | Bose, Punyaprabha | Bethune College |
| | Chakrabarti, Biswaranjan | Hetampur Krishna Chandra College. |
| | Ghosh, Kesabranjan | Non-Collegiate Student, Roll Bar. N 49 B M. College. |
| | Kar, Binayendranath | Scottish Churches College. |
| | Md Abdul Aziz | Rajshahi College |
| | Mukhopadhyay, Paresnath | Ananda Mohan College, Mymensingh |
| | Sinha, Jatindranath | Non-Collegiate Student, Roll Ber N 3 |
| 507 | Das, Durlabhchandra | Vidyasagar College |
| | Ray, Nanigopal | Burdwan Raj College. |
| | Sengupta, Nagendrachandra | Comilla Victoria College |
| 510 | Bhattacharyya, Sureschandra | Rajshahi College. |
| | Chakrabarti, Nirmalsankar | City College. |
| | Chattopadhyay, Manindrachandra | Comilla Victoria College |
| | Dasgupta, Kshitischandra | Non-Collegiate Student, Roll Chi N 1 Chittagong College |
| | Mansur Ali Khan | Rajshahi College. |
| 515 | Bhadra, Bijaykrishna | Vidyasagar College |
| | De, Krishnakumar | Barisal B. M. College |
| | De, Gobindachandra | Chittagong College. |
| | Ghosh, Manmathanath | Daulatpur Hindu Academy |
| | Karmakar, Bhujangabhushan | K N College, Berhampur. |
| | Abdus Salam Sikdar | Non-Collegiate Student, Roll Nar. N. 2. Victoria College, Narail. |
| | Chakrabarti, Bhupalchandra | City College |
| | Hariharnath Singh | Bangabasi College |
| | Majumdar, Krishnacharan | Rajshahi College |
| | Mandal, Harekrishna | Burdwan Raj College. |
| | Mukhopadhyay, Jitendranath | Non-Collegiate Student, Roll Bar N 52 B M. College. |
| 526 | Bhattacharyya, Binodchandra | Narail Victoria College. |
| | Bhattacharyya, Kalipada | Scottish Churches College |
| | Chakrabarti, Taraprasanna | Non-Collegiate Student, Krishnagar College. |
| | Datta, Jitendranath | Bagerhat College. |
| | Datta, Surendramohan | Carmichael College, Rangpur. |
| | Gupta, Jnanendranath | Non-Collegate Student, Roll Bar. N. 55 B. M. College. |
| 533 | Sen, Hiralal | Barisal B M. College. |
| | Chakrabarti, Benimadhab | Midnapur College. |
| | Das, Parswanath | Chittagong College. |
| | Datta, Nirupam | South Suburban College. |
| | Gupta, Kalyani | Bethune College. |

| | | |
|---|---|---|
| | Bandyopadhyay, Dhirendranath | City College. |
| 537 | Das, Anukulchandra | Non-Collegiate Student, Roll Nar N 6 Victoria College. |
| | Das, Jagadischandra | Comilla Victoria College |
| | Sur, Nalinikanta | Feni College. |
| | A. M. Taher Uddin Mia | Barisal B M. College. |
| 541 | Chakrabarti, Durgakumar | Comilla Victoria College. |
| | Mukhopadhyay, Jnanadaprasad | Bangabasi College |
| | Sabitri Lal | Diocesan College |
| | Basu, Asimnath | Scottish Churches College |
| | Bhattacharyya, Praphullakumar | Chittagong College |
| 545 | Chaudhuri, Sasibhushan | Comilla Victoria College |
| | Ghosh, Bijaykrishna | K N. College, Berhampur |
| | Mahammad Mazibar Rahman | Victoria College, Cooch-Behar |
| | Chakrabarti, Pramathanath | Presidency College |
| | Chaudhuri, Nanigopal | Chittagong College. |
| 550 | Maitra, Dwijeschandra | Victoria College, Cooch-Behar |
| | Md Sekender Ali | Cotton College, Gauhati |
| | Mohammad Ekamatali | Ananda Mohan College, Mymensingh |
| | Abdul Hamid Sardar | Narail Victoria College |
| | Abdur Razzaq | K N College, Berhampur |
| | Bandyopadhyay, Jatindramohan | Narail Victoria College |
| | Chakrabarti, Jatindranarayan | Rajshahi College |
| 555 | Datta, Niharbindu | K N College, Berhampur |
| | Mukhopadhyay, Beharilal | St Xavier's College |
| | Mukhopadhyay, Rajendranath | South Suburban College |
| | Syed Abdur Rauf | Ananda Mohan College, Mymensingh |
| | Mitra, Satyakumar | Presidency College |
| | Chakrabarti, Jyotischandra | Carmichael College, Rangpur |
| | Fabiruddin Ahmed | Victoria College, Cooch-Behar |
| 564 | Nath, Ramendramohan | Chittagong College |
| | Palchaudhuri, Taraknath | Krishnagar College |
| | Sengupta, Jaminiranjan | Barisal B. M College |
| | Shaikh Abdul Aziz | Presidency College |
| | Bhattacharyya, Subodhchandra | Sylhet M C College |
| | Chattopadhyay, Dasarathi | Victoria College, Cooch-Behar |
| 570 | Das, Hariprasanna | Barisal B M College |
| | Ray, Sudhiranjan | Scottish Churches College |
| | Shaikh Golam Kader | Ripon College |
| | Bashistha, Baikunthakumar | Sanskrit College |
| | Chattopadhyay, Jugalkisor | Sanskrit College |
| 575 | Bhattacharyya, Lalmohan | Comilla Victoria College |
| | Bhaumik, Dhirendrakumar | Victoria College, Cooch-Behar |
| | Md. Phukanali | Cotton College, Gauhati. |
| | Mukhopadhyay, Bishnucharan | Comilla Victoria College |
| | Basu, Akshaychandra | Uttarpara College |
| | Biswas, Jatindrabinod | Chittagong College |
| | Chakrabarti, Satindranath | Barisal B M College |
| | Dasgupta, Manindranath | Vidyasagar College |
| | Datta, Praphullachandra | City College |
| 581 | Ghosh, Tribhangadas | K. N College, Berhampur |
| | Md. Azheruddin | Rajshahi College |
| | Mukhopadhyay, Batakrishna | Sanskrit College |
| | Mukhopadhyay, Panchanan | Presidency College |
| | Mukhopadhyay, Susilkumar | Uttarpara College |
| | Ray, Ranadakisor | Comilla Victoria College |
| | Syed Mahbub Ali | Bagerhat College |
| | Ashrafuddin Ahamed | Non-Collegiate Student, Roll Chi N 12 Chittagong College |
| | Baksi, Bhupatricharan | Carmichael College, Rangpur |
| | Bhattacharyya, Kalipada | Pabna Edward College |
| 593 | Chattopadhyay, Nilkanta | Barisal B M College |
| | Maitra, Dwijendranath | Rajshahi College. |
| | Sarkar, Girijanath | Non-Collegiate Student, Roll Ber N 10 K N College. |
| | Sinha, Madhusudan | Ripon College |
| | Barah, Ghanasyam | Cotton College, Gauhati |
| | Chakrabarti, Paresnath | Barisal B M College |
| 600 | Chattopadhyay, Sarojaksha | Bankura Wesleyan College |
| | Ghosh, Gopendrakrishna | Non-Collegiate Student, Roll Pab N 11 Edward College. |
| | Biswas, Probhatchandra | Victoria College, Cooch-Behar |
| 604 | Chakrabarti, Manadasankar | Carmichael College, Rangpur |
| | Chakrabarti, Nagendrachandra | Comilla Victoria College |

| | | |
|---|---|---|
| | Md. Kharshed Alam | Barisal B. M. College. |
| | Muhammad Abu Yusuff | Comilla Victoria College |
| | Mukhopadhyay, Nandakumar | Burdwan Raj College |
| 604 | Ray, Sukriti | Bethune College |
| | Sanyal, Panchugopal | Presidency College. |
| | Sarkar, Chintaharan | Burdwan Raj College |
| | Trevore Tyngnger | Sylhet M. C College |
| | Ashrafuddin Ahmed | Feni College |
| | Bagchi, Birendranath | K N College, Berhampur |
| | Bandyopadhyay, Susthirkumar | South Subarban College |
| 614 | Bhattacharyya, Manindranath | St Xavier's College |
| | Chattopadhyay, Sibchandra | Rajshahi College. |
| | Ghosh, Sachindramohan | Bangabasi College |
| | Md Hasan Ali | Presidency College. |
| 621 | Datta, Banbihari | Midnapur College |
| | Sen, Indubhushan | Victoria College, Cooch-Behar |
| | Basu, Jitendranath | City College |
| | Dasgupta, Nirmalendu | Hughli College |
| 623 | John, M J. | Non-Collegiate Student, Roll Ser N 1 |
| | Sarkar, Rajendranath (V) | Daulatpur Hindu Academy |
| | Sengupta, Nagendranath | Barisal B M College |
| | Chattoraj, Dwijapada | Scottish Churches College |
| 628 | Keramat Ali Hawladar | Barisal B M College. |
| | Mukhopadhyay, Kiritibhushan | K. N College, Berhampur |
| | Patni, Kalipada | Sylhet M. C College |
| | Baruya, Manikchandra | Cotton College, Gauhati |
| | Basu, Nripendranath | Non-Collegiate Student, Roll Cal N 51 Vidyasagar College. |
| | Bhattacharyya, Saradadas | Krishnagar College |
| | Datta, Praphullachandra | Comilla Victoria College |
| 632 | Gangopadhyay, Atulchandra | Serampur College |
| | Gangopadhyay, Sitalchandra | Scottish Churches College |
| | Kundu, Krishnagobinda | Non-Collegiate Student, Roll Baul N 6 Rajshahi College. |
| | Mahammad Ali Pramanik, I | Rajshahi College. |
| | Ray, Jogeschandra | K N College, Berhampur |
| | Syed Irshad Husain | Ripon College |
| | Abdur Salam Malik | Bangabasi College. |
| | Acharyya, Bipinchandra | Comilla Victoria College |
| | Basu, Saritkumar | Non-Collegiate Student, Roll Cal N 222 City College |
| | Bhattacharyya, Kumudranjan | Sylhet M C. College |
| 642 | Das, Bijaychandra | Bagerhat College |
| | Das, Sasikumar | Barisal B. M. College |
| | Mukhopadhyay, Ramaprasad | Bankura Wesleyan College |
| | Nandi, Nareschandra | Daulatpur Hindu Academy |
| | Pandit, Tarapada | Carmichael College, Rangpur |
| | Sanyal, Makhanchandra | Rajshahi College |
| 652 | Bhadra, Surendranath | Bagerhat College |
| | Das, Jogeschandra | Sylhet M C College |
| | Dasgupta, Binodbihari | Barisal B M College |
| | Dasgupta, Jyotischandra | Vidyasagar College. |
| 656 | Makram Ali Choudhuri | Sylhet M C. College |

SECOND DIVISION

*(Arranged in alphabetical order)*

| | |
|---|---|
| A B. Syed Rezai Karim | Barisal B. M. College. |
| A G Mofeozur Rahman | Ripon College. |
| A. K M Nazir Hossain | Ripon College. |
| A. M. M. Zeawal Haque | Non-Collegiate Student, Roll Chi. NII Chittagong College. |
| A. M. Muhammad Abdul Hai | Non-Collegiate Student, Roll, Com. N. 23, Comilla Victoria College. |
| A. M. Salimullah | Presidency College. |
| Abbas Ali Mian | Non-Collegiate Student, Baul N. 9 Rajshahi College. |
| Abdul Ahmad Halder | Ripon College. |
| Abdul Alim | Comilla Victoria College. |

| | | |
|---|---|---|
| 10 | Abdul Bari | Burdwan Raj College |
| | Abdul Bari Jamali | Ananda Mohan College, Mymensingh |
| | Abdul Gofur | Comilla Victoria College |
| | Abdul Hakim | Comilla Victoria College |
| | Abdul Hakim | Faridpur Rajendra College. |
| | Abdul Halim Khan | Ananda Mohan College, Mymensingh |
| | Abdul Halim Mia | Barisal B M. College. |
| | Abdul Hamid Khan | Non-Collegiate Student, Roll Cal N 243, City College, Calcutta |
| | Abdul Hares Mallick | Barisal B M College |
| | Abdul Jalil | Chittagong College. |
| 20 | Abdul Kadir | Comilla Victoria College |
| | Abdul Latif | Barisal B M College. |
| | Abdul Mannan, I | Comilla Victoria College |
| | Abdul Mannan, II | Comilla Victoria College |
| | Abdul Satter Bhuya | Bagerhat College |
| | Abdur Rahaman Khan | Comilla Victoria College |
| | Abdur Rashid Soud | Comilla Victoria College |
| | Abdur Rauf | Feni College |
| | Abdur Razzaque | Chittagong College |
| | Abdus Razzaque | Non-Collegiate Student, Roll Chi N 9 Chittagong College |
| 30 | Abdus Salam | Chittagong College |
| | Abu Ashraf Mohammad Wajih | St Xavier's College |
| | Abu Sayid Md Osman Ghani Khan | Pabna Edward College |
| | Abul Fazl Khondkor | Comilla Victoria College |
| | Abul Forah Sekandur Khan | Comilla Victoria College |
| | Abul Khair Saikh | K N College, Berhampur |
| | Abul Mohsen Syedah Azam | City College. |
| | Acharyya, Dhirendranath | Narail Victoria College |
| | Acharyya, Nripendranath | Bangabasi College |
| | Acharyyachaudhuri, Hirendranarayan | South Suburban College |
| 40 | Achhiuddin Ahamed | Barisal B M College |
| | Adhikari, Annadamohan | Carmichael College, Rangpur |
| | Adhikari, Rajkrishna | City College |
| | Adhikari, Suryyakanta | Serampur College |
| | Adhya, Sibcharan | Bangabasi College |
| | Aftabuddin Ahmed, II | Rajshahi College |
| | Ahamed Ali Majumder | Sylhet M C College |
| | Ahmad Serajuddin | Anandamohan College, Mymensingh |
| | Ashanuddin Ahammed | Rajshahi College |
| | Akela Satyanarayana | Non-Collegiate Student, Roll Cal N 121 |
| 50 | Ali Ahammad | Comilla Victoria College |
| | Ali Ahmed Chowdhury | Chittagong College |
| | Alimuddin Mia | Comilla Victoria College |
| | Ayaz Mohammed Khan (V) | Non-Collegiate Student, Cal N 264, Presidency College |
| | Azizar Rahman Bhuia | Comilla Victoria College |
| | Azizur Rahaman | Chittagong College |
| | Bagchi, Jitendramohan | Rajshahi College |
| | Bagchi, Pradyotkumar | Non-Collegiate Student, 3 Krishnagar College |
| | Bagchi, Santiram | K N College, Berhampur |
| | Bagchi, Saradindu | Non-Collegiate Student, Roll Cal N 223 City College |
| 60 | Bagchi, Sarojranjan | K N College, Berhampur |
| | Baharuddin Ahamed | Carmichael College, Rangpur |
| | Bahauddin Ahmed | Presidency College |
| | Baidya, Saratchandra | Ripon College |
| | Baksi, Dhirendrachandra | Vidyasagar College |
| | Baksi, Indubhushan | Comilla Victoria College |
| | Baksi, Kalipada | St Paul's College |
| | Balajapalli Sreerama Murti V | Non-Collegiate Student, Roll Cal N 298 S S College, Bhowanipur. |
| | Bandyopadhyay, Akshaykumar | Ripon College |
| | Bandyopadhyay, Amitabha | Chittagong College |
| 70 | Bandyopadhyay, Asitaranjan | Barisal B M College |
| | Bandyopadhyay, Bagalaprasad | Non-Collegiate Student, Roll Cal N 104 Vidyasagar College |
| | Bandyopadhyay, Baidyanath | South Suburban College |
| | Bandyopadhyay, Bhabanicharan | Non-Collegiate Student, Roll Ber N 12 K N College, Berhampore |

| | | |
|---|---|---|
| | Bandyopadhyay, Bhabeschandra | Bankura Wesleyan College. |
| | Bandyopadhyay, Bijaykumar | Bankura Wesleyan College. |
| | Bandyopadhyay Bimalchandra | Scottish Churches College. |
| | Bandyopadhyay, Bipulananda | Midnapur College. |
| | Bandyopadhyay, Chunilal | South Suburban College. |
| | Bandyopadhyay, Debicharan | Hughli College. |
| 80 | Bandyopadhyay Gangadhar | Bankura Wesleyan College. |
| | Bandyopadhyay, Hemchandra | Burdwan Raj College |
| | Bandyopadhyay, Jnanendramohan | Presidency College |
| | Bandyopadhyay, Kalikumar | Serampur College. |
| | Bandyopadhyay, Kamadakinkar | Hetampur Krishna Chandra College |
| | Bandyopadhyay, Kshititosh | Ananda Mohan College, Mymensingh |
| | Bandyopadhyay, Manindrakumar | Faridpur Rajendra College |
| | Bandyopadhyay, Nabanidhar | K N College, Berhampur. |
| | Bandyopadhyay, Nagendranath | Krishnagar College |
| | Bandyopadhyay, Nanigopal | Barisal B M College |
| 90 | Bandyopadhya, Nilmani | Bangabasi College |
| | Bandyopadhyay, Niradgopal | St Paul's College |
| | Bandyopadhyay, Phanindranath | Bankura Wesleyan College |
| | Bandyopadhyay, Pratulchandra | City College |
| | Bandyopadhyay, Radhajiban | Vidyasagar College. |
| | Bandyopadhyay, Sailaprasad | Presidency College |
| | Bandyopadhyay, Sitaldas | St Paul's College |
| | Bandyopadhyay, Subodhkumar | Ripon College |
| | Bandyopadhyay, Susilkumar | City College |
| | Bandyopadhyay, Susilkumar | St Xavier's College. |
| 100 | Bandyopadhyay, Tarakdas | Non-Collegiate Student, Roll Cal N. 64 Vidyasagar College |
| | Banik, Harischandra | Non-Collegiate Student, Roll Com N 10 Comilla Victoria College |
| | Banik, Jaychandra | Comilla Victoria College |
| | Bara, Prabhudan | Roll Cal N 199 St Paul's College |
| | Barkakati, Harakanta | Cotton College, Gauhati |
| | Barman, Bhupendrakumar | Victoria College, Cooch-Behar |
| | Barman, Mahimchandra | Sylhet M C College |
| | Barmanchaudhuri, Bhupendrakumar | Comilla Victoria College |
| | Baruya, Bidyakanta | Cotton College, Gauhati |
| | Baruya, Binandachandra | Cotton College, Gauhati |
| 110 | Baruya, Haramohan | Non-Collegiate Student, Roll Chi N. 14 Chittagong College |
| | Baruya, Narayanchandra | Cotton College, Gauhati |
| | Basaratali Chowdhury | City College |
| | Basishtha, Madhusudan | City College |
| | Basu, Abinaschandra | Chittagong College |
| | Basu, Amulyakumar | Non-Collegiate Student, Roll Far N 1 Rajendra College, Faridpur |
| | Basu, Amulyakumar | South Suburban College |
| | Basu, Anilkrishna | Scottish Churches College |
| | Basu, Bhupendranath, II | City College |
| | Basu, Birendramohan | Faridpur Rajendra College |
| | Basu, Dhirendranath | Barisal B M College |
| 120 | Basu, Haridas | Daulatpur Hindu Academy. |
| | Basu, Jnanadaranjan | Chittagong College. |
| | Basu, Jitendranath | Barisal B M College |
| | Basu, Kanailal | Bankura Wesleyan College |
| | Basu, Naliniranjan | Burdwan Raj College |
| | Basu, Niradkumar | Narail Victoria College. |
| | Basu, Nisikanta | Daulatpur Hindu Academy. |
| | Basu, Pramathanath | Narail Victoria College. |
| | Basu, Rabindranath | Non-Collegiate Student Roll Cal N 188 S. S. College, Bhowanipur. |
| 130 | Basu, Satyaranjan | Presidency College. |
| | Basu, Subodhchandra | Ripon College |
| | Basu, Sudhirkumar | South Suburban College |
| | Basu, Tarapada | South Suburban College. |
| | Basumallik, Bholanath | Presidency College. |
| | Bh. Kristna Rao | Non-Collegiate Student, Roll Cal. N. 51. |
| | Bhar, Amarnath | Vidyasagar College. |
| | Bhadra, Amulyakrishna | Daulatpur Hindu Academy. |
| | Bhaduri, Narendranath | Ripon College. |
| | Bhattacharyya, Ajitnath | Krishnagar College. |
| 140 | Bhattacharyya, Bagalapada | Hetampur Krishna Chandra College. |
| | Bhattacharyya, Baidyanath | Presidency College. |

| | | |
|---|---|---|
| | Bhattacharyya Bamandas | Bankura Wesleyan College |
| | Bhattacharyya, Bibhutibhushan | Ripon College. |
| | Bhattacharyya, Binaykumar | K N College, Berhampur |
| | Bhattacharyya, Bholanath | Pabna Edward College |
| | Bhattacharyya, Brahmananda | Vidyasagar College |
| | Bhattacharyya, Dineschandra | Comilla Victoria College |
| | Bhattacharyya, Harendrakumar | Sylhet M C College |
| | Bhattacharyya, Hrishikes | Vidyasagar College |
| 150 | Bhattacharyya, Jagatbandhu | Narail Victoria College |
| | Bhattacharyya, Janakinath | Vidyasagar College |
| | Bhattacharyya, Manindranath | Bagerhat College |
| | Bhattacharyya, Manindranath | K. N College, Berhampur |
| | Bhattacharyya, Nanigopal | Rajshahi College |
| | Bhattacharyya, Nilratan | Daulatpur Hindu Academy |
| | Bhattacharyya, Prabodhchandra | Krishnagar College |
| | Bhattacharyya, Pramadananda | Sylhet M C College |
| | Bhattacharyya, Pramadranjan | Sylhet M C College. |
| | Bhattacharyya, Pramathanath | Victoria College, Cooch-Behar |
| 160 | Bhattacharyya, Rebatiranjan | Barisal B M College |
| | Bhattacharyya, Sachindrabhushan | Non-Collegiate Student, Roll Cal N 66 Vidyasagar College |
| | Bhattacharyya, Sachindrakumar | Sylhet M C College |
| | Bhattacharyya, Sadhanchandra | K N College, Berhampur |
| | Bhattacharyya, Santimay | Daulatpur Hindu Academy |
| | Bhattacharyya, Saurendranath | Vidyasagar College |
| | Bhattacharyya, Sitalchandra | Barisal B M. College |
| | Bhattacharyya Surendranath | Daulatpur Hindu Academy |
| | Bhattacharyya, Tripuranath | Sylhet M C College |
| | Bhaumik, Binodbihari | Sylhet M C College |
| 170 | Bhorali, Maheschandra | Cotton College, Gauhati |
| | Bhuyan, Lalitchandra | Cotton College, Gauhati |
| | Biswas, Anantakumar | St Paul's College |
| | Biswas, Aswinikumar | St Paul's College |
| | Biswas, Banchharam | Non-Collegiate Student, Roll Far N 10 Faridpur Rajendra College |
| | Biswas, Bidhubhushan | City College |
| | Biswas, Birendrakumar | Presidency College |
| | Biswas, Brindabanchandra | Bangabasi College |
| | Biswas, Dhirendranath | Faridpur Rajendra College |
| | Biswas, Gosthabihari | K N College, Berhampur |
| 180 | Biswas, Rajendranath | Daulatpur Hindu Academy |
| | Biswas, Sibakrishna | St Paul's College |
| | Bozlal Hoque | Comilla Victoria College |
| | Brahma, Jatindramohan | Non-Collegiate Student, Roll Com No 4 Comilla Victoria College |
| | Brahma, Rupnath | Cotton College, Gauhati |
| | Brahmachari, Premiranjan | South Suburban College |
| | C Suryanarayan Prasad | Bangabasi College |
| | Chakladar, Sisirananda | Victoria College, Cooch-Behar |
| | Chakrabarti, Abanikanta | Ananda Mohan College, Mymensingh |
| | Chakrabarti Amarendrakumar | City College |
| 190 | Chakrabarti Anantakumar | City College |
| | Chakrabarti Asitchandra | Comilla Victoria College |
| | Chakrabarti Bhabeschandra | Carmichael College, Rangpur |
| | Chakrabarti Bidhubhushan | Scottish Churches College |
| | Chakrabarti Bimalendu | Rajshahi College. |
| | Chakrabarti Bipinchandra | Cotton College, Gauhati |
| | Chakrabarti, Chandramohan | Barisal B M College |
| | Chakrabarti, Chittaranjan | Non-Collegiate Student, Roll Far N 5 Faridpur Rajendra College |
| | Chakrabarti, Debendrananda | Victoria College, Cooch-Behar |
| | Chakrabarti, Dhirendralal | Victoria College, Cooch-Behar |
| 200 | Chakrabarti, Dhirendamohan | Ananda Mohan College, Mymensingh |
| | Chakrabarti, Dwijendrachandra | Comilla Victoria College |
| | Chakrabarti, Ganeschandra | Chittagong College |
| | Chakrabarti, Gangeschandra | Bagerhat College |
| | Chakrabarti, Gunadaprasanna | Barisal B M College |
| | Chakrabarti, Hariprasanna | Vidyasagar College. |
| | Chakrabarti, Hirendrachandra | Vidyasagar College |
| | Chakrabarti, Indubhushan | Krishnagar College |
| | Chakrabarti, Jatindrachandra | Comilla Victoria College |
| | Chakrabarti, Jatindranath | Pabna Edward College |
| 210 | Chakrabarti, Jogeschandra | Comilla Victoria College |
| | Chakrabarti, Kaminikumar | Sylhet M C College |

| | | |
|---|---|---|
| | Chakrabarti, Kedareswar | Victoria College, Cooch-Behar |
| | Chakrabarti, Krishnadhan | Hughli College. |
| | Chakrabarti, Kshitischandra, II | Ananda Mohan College, Mymensingh |
| | Chakrabarti, Lalitkumar | Barisal B M. College |
| | Chakrabarti, Maheschandra | Comilla Victoria College |
| | Chakrabarti, Manmathanath | Vidyasagar College. |
| | Chakrabarti, Nagendrachandra | South Suburban College. |
| | Chakrabarti, Prabhatchandra | Ananda Mohan College, Mymensingh |
| 220 | Chakrabarti, Pradyotkumar | Sylhet M. C College. |
| | Chakrabarti, Prakaschandra | South Suburban College |
| | Chakrabarti, Rabindranath | Victoria College, Cooch-Behar |
| | Chakrabarti, Rameschandra, I | Barisal B. M. College |
| | Chakrabarti, Santoshkumar | Barisal B M College. |
| | Chakrabarti, Sudhirbihari | Non-Collegiate Student, Roll Far N 15, Faridpur Rajendra College |
| | Chakrabarti, Sureschandra, I | Comilla Victoria College |
| | Chakrabarti, Suryyanarayan | Hetampur Krishna Chandra College |
| | Chakrabarti, Upendrachandra | Comilla Victoria College |
| | Nathkaul, Chandra Mohan | Midnapur College |
| 230 | Chandra, Niratan | K N College, Berhampur |
| | Chattopadhyay, Adyapada | Hetampur Krishna Chandra College |
| | Chattopadhyay, Amarendranath | Non-Collegiate Student, Roll Bar N 8, Barisal B M. College. |
| | Chattopadhyay, Bhagabaticharan... | Roll Cal N 159 Ripon College |
| | Chattopadhyay, Bibhutibhushan | Burdwan Raj College |
| | Chattopadhyay, Binodbihari | Daulatpur Hindu Academy |
| | Chattopadhyay, Biswanath | South Suburban College |
| | Chattopadhyay, Debendranath | Barisal B M College |
| | Chattopadhyay, Dhirendranath | South Suburban College |
| | Chattopadhyay, Dhwajadhari | Bankura Weslevan College |
| 240 | Chattopadhyay, Dwarakanath | Scottish Churches College |
| | Chattopadhyay, Gopinath | City College |
| | Chattopadhyay, Jatindrakumar | Barisal B M College |
| | Chattopadhyay, Jitendranath | Barisal B M College |
| | Chattopadhyay, Kalabaran | Serampur College |
| | Chattopadhyay, Kaliprasad | Bagerhat College |
| | Chattopadhyay, Kalyankumar | Ripon College |
| | Chattopadhyay, Karunakrishna | K N College, Berhampur |
| | Chattopadhyay, Krinkarnath | Faridpur Rajendra College |
| | Chattopadhyay, Lalitmohan | Ripon College |
| 250 | Chattopadhyay, Manmathanath | Barisal B M College |
| | Chattopadhyay, Nanibhushan | Bagerhat College |
| | Chattopadhyay, Narendranath | Daylatpur Hindu Academy |
| | Chattopadhyay, Narendranath | South Suburban College |
| | Chattopadhyay, Nripati | South Suburban College |
| | Chattopadhyay, Pasupati | K N College, Berhampur |
| | Chattopadhyay, Phanibhushan | Scottish Churches College |
| | Chattopadhyay, Rampada | Hetampur Krishna Chandra College |
| | Chattopadhyay, Ramaranjan | Scottish Churches College |
| | Chattopadhyay, Sachindranath | Krishnagar College |
| 260 | Chaudhuri, Asutoshchandra | Sylhet M C College. |
| | Chaudhuri, Bhabadhar | Cotton College, Gauhati |
| | Chaudhuri, Bholanath | Hetampur Krishna Chandra College |
| | Chaudhuri, Girijasankar | Carmichael College, Rangpur |
| | Chaudhuri, Harendrachandra | Comilla Victoria College |
| | Chaudhuri, Hemchandra | Pabna Edward College |
| | Chaudhuri, Hemendralal | Chittagong College |
| | Chaudhuri, Kalipasanna | Non-Collegiate Student, Roll Cal N 216, City College. |
| | Chaudhuri, Krishnakisor | Ripon College. |
| | Chaudhuri, Kshirodkumar | South Suburban College |
| 270 | Chaudhuri, Maheschandra | Comilla Victoria College |
| | Chaudhuri, Prankrishna | Rajshahi College. |
| | Chaudhuri, Radhagobinda | Burdwan Raj College. |
| | Chaudhuri, Samaranchandra | Comilla Victoria College. |
| | Chaudhuri, Satyendranath | Comilla Victoria College. |
| | Chelleng, Biswanath | Cotton College, Gauhati |
| | Cherukuvada Viswanadha Raju | South Suburban College |
| | Dam, Jogendrachandra | Sylhet M. C. College |
| | Das, Ambujaksha | Burdwan Raj College. |
| | Das, Amiyamay | Midnapur College. |
| 280 | Das, Anantakumar | Barisal B. M College |
| | Das, Atiram | Cotton College, Gauhati. |
| | Das, Banamali | Victoria College, Cooch-Behar. |

| | | |
|---|---|---|
| | Das, Bharatchandra | Comilla Victoria College. |
| | Das, Bholanath | Midnapur College. |
| | Das, Bipinbihari | Sylhet M. C. College. |
| | Das, Birendrachandra | Scottish Churches College |
| | Das, Birendrakanta | Ananda Mohan College, Mymensingh |
| | Das, Dhirendranath | Barisal B M. College |
| | Das, Dimbeswar | Cotton College, Gauhati |
| 290 | Das, Durgaprasasuna | Sylhet M C College |
| | Das, Ganeschandra | Barisal B M College |
| | Das, Gopalchandra | Barisal B M College |
| | Das, Harendrakumar | Sylhet M C College |
| | Das, Hrishikes | Victoria College, Cooch-Behar |
| | Das, Jatindranath | Daulatpur Hindu Academy |
| | Das, Jitendrakumar | Bagerhat College. |
| | Das, Jogendrachandra | Comilla Victoria College |
| | Das, Jogendranath | Carmichael College, Rangpur |
| | Das, Jyotischandra | Sylhet M C College |
| 300 | Das, Khagendranath | K N. College, Berhampur |
| | Das, Kshitindranath | Scottish Churches College |
| | Das, Kshitischandra | Cotton College, Gauhati |
| | Das, Kshitischandra | Chittagong College |
| | Das, Matilal | Daulatpur Hindu Academy |
| | Das, Nagendranath | Ripon College. |
| | Das, Nagendranath | Daulatpur Hindu Academy |
| | Das, Nitaikisor | Vidyasagar College |
| | Das, Phanindranath | Victoria College, Cooch-Behar |
| | Das, Rajendrakumar | Sylhet M C College |
| 310 | Das, Ramendranath | Non-Collegiate Student, Roll Dau N 11 Daulatpur Hindu Academy |
| | Das, Rameschandra | Carmichael College, Rangpur |
| | Das, Ratneswar | Comilla Victoria College |
| | Das, Rupchandra | Bagerhat College |
| | Das, Umeschandra | Ripon College |
| | Dasadhikari, Biharilal | City College |
| | Dasgupta, Amiyabala | Diocesan College |
| | Dasgupta, Anilkumar | Bagerhat College |
| | Dasgupta, Binayranjan | St Paul's College |
| | Dasgupta, Dhirendranath | Barisal B M College |
| 320 | Dasgupta, Gopalchandra | Ripon College |
| | Dasgupta, Kirankumar | Barisal B M College |
| | Dasgupta, Nagendranath | Non-Collegiate Student, Roll Bar N 22 Barisal B M College |
| | Dasgupta, Rabindranath | Barisal B M College |
| | Dasgupta, Samatul | Non-Collegiate Student, Roll Bar N 9 Barisal B M College |
| | Dasgupta, Satischandra | Barisal B M College |
| | Dasgupta, Sisirkumar | Barisal B M College |
| | Dasgupta, Usharanjan | Bangabasi College |
| | Datta, Achintyaranjan | Comilla Victoria College |
| | Datta, Anantadeb | Bangabasi College |
| 330 | Datta, Bipinchandra | Feni College |
| | Datta, Birendranath | Daulatpur Hindu Academy |
| | Datta, Chakrapani | Cotton College, Gauhati |
| | Datta, Dhirendranarayan | Chittagong College |
| | Datta, Jatindramohan | Non-Collegiate Student, Roll Bar N 28 Barisal B M College |
| | Datta, Jaypati | K N College, Berhampur |
| | Datta, Jitendranath | City College |
| | Datta, Jogeschandra | Comilla Victoria College |
| | Datta, Kshitischandra | Non-Collegiate Student, Roll Dau N 8 |
| | Datta, Lalitmohan | Daulatpur Hindu Academy |
| 340 | Datta, Madhusudan | Vidyasagar College |
| | Datta, Nalinchandra | Sylhet M C College |
| | Datta, Nirmalchandra | Hughli College |
| | Datta, Premtosh | Scottish Churches College |
| | Datta, Ramanimohan | Victoria College, Cooch-Behar |
| | Datta, Samarendrakumar | Vidyasagar College |
| | Datta, Saratkumar | Midnapur College |
| | Datta, Sitalansusekhar | Burdwan Raj College |
| | Datta, Sudhindrabimal | Chittagong College |
| | Datta, Umendrakumar | Scottish Churches College |
| 350 | Datta, Upendranath | Bagerhat College |
| | Dattaharuya, Bichitranarayan | Roll Gau N 3 Cotton College, Gauhati |

| | | |
|---|---|---|
| | Dattabiswas, Jagadis | Sylhet M. C. College. |
| | Dattaray, Sudhirchandra | Vidyasagar College. |
| | David, Asokbardhan | St. Paul's College. |
| | De, Bholanath | Bankura Wesleyan College |
| | De, Chittaranjan | Barisal B M. College |
| | De, Jatindrakumar | Chittagong College |
| | De, Jitendrachandra | Ananda Mohan College, Mymensingh |
| | De, Nripendrakumar | Carmichael College, Rangpur |
| 360 | De, Pramodchandra | Sylhet M. C College |
| | De, Praphullaranjan | Barisal B M College |
| | De, Rajkamal | Feni College |
| | De, Ramrup | Comilla Victoria College |
| | De, Samarendranath | City College |
| | De, Satischandra | Hetampur Krishna Chandra College |
| | Deacon K P Gunarghese | Serampur College |
| | Deb, Nikunjabihari | Chittagong College |
| | Deb, Ramgopal | Carmichael College, Rangpur |
| | Debbarman, Jaysinha | South Suburban College |
| 370 | Debbarman, Kumar Bhupendrachandra | Non-Collegiate Student, Roll Com N 16 Comilla Victoria College |
| | Dechaudhuri, Anilbihari | Chittagong College |
| | Dechaudhuri, Rabindrakumar | Comilla Victoria College |
| | Deshmukh, Asutosh | Bankura Wesleyan College |
| | Dhar, Jatindrachandra | Comilla Victoria College |
| | Dhara, Nirmalchandra | South Suburban College |
| | Dharchaudhuri, Jatindrakumar | Sylhet M C College |
| | Dube, Ramchandra | K N College, Berhampur |
| | Enda, Swarnalata | Bethune College |
| | Endaw, Birajanath | Sylhet M C College |
| 380 | Ershad Ali Khan | Faridpur Rajendra College |
| | Fayajuddin Biswas (M) | K N College, Berhampur |
| | Fazar Ali Ahmed | Carmichael College, Rangpur |
| | Franklin, Drilsibon | Diocesan College |
| | Fazilat Hossain | Ripon College |
| | Gangopadhyay, Abaniranjan | Bangabasi College |
| | Gangopadhyay, Amulyalal | Barisal B M College |
| | Gangopadhyay, Binaygopal | Scottish Churches College |
| | Gangopadhyay, Binodlal | Non-Collegiate Student, Roll Cal N 211 City College. |
| | Gangopadhyay, Dinabandhu | Bagerhat College |
| 390 | Gangopadhyay, Dineschandra | Victoria College, Cooch-Behar |
| | Gangopadhyay, Makhanlal | Bangabasi College |
| | Gangopadhyay, Manindranath | Daulatpur Hindu Academy |
| | Gangopadhyay, Ramangasundar | Bankura Wesleyan College |
| | Gangopadhyay, Santiprasad | Faridpur Rajendra College |
| | Gangopadhyay, Sukhendramohan | Non-Collegiate Student, Roll Bar N 3 Barisal B M. College |
| | Ghiasuddin Ahmed | Carmichael College, Rangpur |
| | Gholam Rasul Khan | Presidency College |
| | Ghosh, Amulyagopal | Faridpur Rajendra College |
| | Ghosh, Anathbandhab | Midnapur College |
| 400 | Ghosh, Bagalaprasanna | K N College, Berhampur |
| | Ghosh, Bibhutiban | Barisal B M. College. |
| | Ghosh, Birendrakumar | Victoria College, Cooch-Behar |
| | Ghosh, Birendranath | Barisal B M College |
| | Ghosh, Brajendranath | Barisal B. M College |
| | Ghosh, Byomkes | Vidyasagar College |
| | Ghosh, Debendramohan | Non-Collegiate Student, Roll Rang N 8, Rangpur Carmichael College |
| | Ghosh, Debendranath | Bagerhat College |
| | Ghosh, Dhirendranath | Carmichael College, Rangpur |
| | Ghosh, Gopalchandra | Narail Victoria College |
| 410 | Ghosh, Gosthabihari | City College. |
| | Ghosh, Harihar | Serampur College. |
| | Ghosh, Harisadhan | City College. |
| | Ghosh, Hemendranath | Ripon College. |
| | Ghosh, Jatischandra | Krishnagar College |
| | Ghosh, Jogindranath | Daulatpur Hindu Academy. |
| | Ghosh, Jyotischandra | Ripon College. |
| | Ghosh, Kalipada | Daulatpur Hindu Academy |
| | Ghosh, Manmathanath | City College. |
| | Ghosh, Nagendranath | Vidyasagar College |
| 420 | Ghosh, Nagesnath | Bangabasi College. |
| | Ghosh, Narayanchandra | Narail Victoria College. |

| | | |
|---|---|---|
| | Ghosh, Nepalchandra | Barisal B M. College. |
| | Ghosh, Nirendralal | City College. |
| | Ghosh, Nisikanta | Bangabasi College |
| | Ghosh, Phanibhushan | Non-Collegiate Student, Roll Bei N 1 |
| | Ghosh, Pramathanath | Roll Coo. N. 7 Victoria College, Cooch-Behar |
| | Ghosh, Praphullachandra | Natail Victoria College |
| | Ghosh, Praphullakumar | Midnapur College |
| | Ghosh, Rajendralal | Vidyasagar College |
| 430 | Ghosh, Rakhalraj | Ripon College. |
| | Ghosh, Sailendranath | South Suburban College |
| | Ghosh, Santoshkumar | St Xavier's College |
| | Ghosh, Sasadhar | Cotton College, Gauhati |
| | Ghosh, Satipada | Barisal B M College |
| | Ghosh, Satischandra | Pabna Edward College |
| | Ghosh, Sitanath | Pabna Edward College |
| | Ghosh, Sudebi | Bethune College |
| | Ghosh, Sudhirchandra | South Suburban College |
| | Ghosh, Sudhirkumar | Midnapur College |
| 440 | Ghoshal, Kesabchandra | Barisal B M College |
| | Ghoshal, Nagendranath | Hughli College |
| | Ghoshal, Pramathanath | Ripon College |
| | Ghoshal, Santoshkumar | Presidency College |
| | Gop, Mahendrachandra | Comilla Victoria College |
| | Gopal Krishna | Non-Collegiate Student, City College, Roll Cal N 246 |
| | Goswami, Achyutananda | Ananda Mohan College, Mymensingh |
| | Goswami, Amulyachandra | Ananda Mohan College, Mymensingh |
| | Goswami, Dayalchand | Sanskrit College |
| | Goswami, Jibangopal | K N College, Berhampur |
| 450 | Goswami, Nareschandra | Ananda Mohan College, Mymensingh |
| | Goswami, Nityagopal | Carmichael College, Rangpur |
| | Goswami, Pareschandra | Vidyasagar College |
| | Goswami, Ramchandra | Cotton College, Gauhati |
| | Goswami, Ramhari | Bankura Wesleyan College |
| | Goswami, Ramnarayan | Non-Collegiate Student, Burdwan Raj College Roll Bur N 4 |
| | Guha, Amalendu | Ananda Mohan College, Mymensingh |
| | Guha, Amaleschandra | Non-Collegiate Student, Roll Gau N 6, Cotton College, Gauhati |
| | Guha, Girindrakumar | Victoria College, Cooch-Behar |
| | Guha, Kshitischandra | Bagerhat College |
| 460 | Guha, Nalinranjan | Faridpur Rajendra College |
| | Guha, Ramtaran | Vidyasagar College |
| | Guha, Satyalal | Daulatpur Hindu Academy. |
| | Guhathakurta, Rasbihari | Barisal B M. College |
| | Guin, Lalita | Bethune College |
| | Gupta, Anadhranjan | Non-Collegiate Student, Roll Bar N 23 |
| | Gupta, Dhirendranath | Daulatpur Hindu Academy |
| | Gupta, Dhirendranath | Vidyasagar College |
| | Gupta, Kshitischandra | Hetampur Krishna Chandra College |
| | Guptachaudhuri, Harendrakumar | Sylhet M. C College |
| 470 | Guptachaudhuri, Narendrakisor | Sylhet M C. College |
| | G Venkoba Rao | Non-Collegiate Student, Roll Cal N 125 |
| | Habiber Rahman | Comilla Victoria College |
| | Hajra, Sankariprasad | Non-Collegiate Student, Roll Bur N 8 Burdwan Raj College |
| | Hajra, Sasadhar | City College. |
| | Hakimuddin Ahmed | St Paul's College |
| | Haldar, Bipinbihari | Barisal B M College |
| | Haldar, Dharmadas | City College |
| | Haldar, Gopalchandra | Bagerhat College |
| | Haldar, Jagadischandra | Barisal B M College |
| 480 | Haldar, Phanindranath | Ripon College |
| | Haldar, Sailajakanta | Burdwan Raj College |
| | Haldar, Sudhirchandra | Presidency College |
| | Haldar, Sureschandra | Daulatpur Hindu Academy |
| | Hansdah, Dorothy Neharbala | Diocesan College |
| | Haoladar, Upendranath | Barisal B M College |
| | Himansupratab Singh Deo | Non-Collegiate Student, Roll Cal N 263 Presidency College |
| | Hor, Kshitischandra | Pabna Edward College |
| | Ismail Hosain Mian | Carmichael College, Rangpur |
| | I. V. L. Narasinhamurti | Non-Collegiate Student, Roll Cal. N 53 |

| | | |
|---|---|---|
| 490 | Jana, Debendranath | Midnapur College. |
| | Pande, Jitnath | Non-Collegiate Student, Roll Mid. N. 4. Midnapur College. |
| | Joardar, Asutosh | South Suburban College. |
| | Jobermohan Roy | Sylhet M. C. College. |
| | Joseph, Addanki | Non-Collegiate Student, Roll Ser. N 3 |
| | Kafiluddin Majhi | Barisal B. M. College. |
| | Kailashkumar Verma, | Sanskrit College. |
| | Kakati, Bharatchandra | Cotton College, Gauhati |
| | Kameswar Dayal, | St Paul's College. |
| | Kanjabilla, Makhanlal | Barisal B M. College |
| 500 | Kanungo, Nirmalchandra | Chittagong College |
| | Kar, Chandrakumar | Scottish Churches College |
| | Kar, Kamalaprasanna | Bangabasi College. |
| | Karmakar, Hemchandra | Non-Collegiate Student, Roll Chi N 20 Chittagong College. |
| | Karmakar, Jaminikumar | Barisal B M College. |
| | Kazi Abdus Sobhan | Non-Collegiate Student, Roll Bar N. 45 Barisal B M. College. |
| | Kazi Amiruzzaman | Comilla Victoria College |
| | Kedarnath Acharya Dikshit | City College |
| | K C Neelacandha Varier | Non-Collegiate Student, Roll Cal N 56, |
| | Khairuddin Ahmed | Barisal B M College |
| 510 | Kham, Jogendranath | Pabna Edward College |
| | Khan, Bhaktibhushan | City College |
| | Khandkar Rahat Ali | Burdwan Raj College |
| | Khasikel, Chintaharan | Bagerhat College. |
| | Khastagir, Binodbihari | Bangabasi College |
| | Khondkar Raqibus Sultan | South Suburban College |
| | Kifaitulla Prodhan | Carmichael College, Rangpur |
| | Konwar, Nagendranath | Cotton College, Gauhati |
| | Kundu, Anandachandra | Ripon College |
| | Kundu, Ardhendusekhar | K N College, Berhampur. |
| 520 | Kundu, Jyotikumar | City College |
| | Kundu, Radhaballabh | Pabna Edward College |
| | Kundu, Ramkrishna | Bankura Wesleyan College |
| | Kundu, Tarakdas | K N College, Berhampur |
| | Kundu, Tarakanta | Pabna Edward College |
| | Lahiri, Ajitkumar | Non-Collegiate Student, Roll Cal N 231, City College |
| | Lahiri, Atulchandra | Carmichael College, Rangpur |
| | Lahiri, Jatindranath | Non-Collegiate Student, Roll Pab N 5, Pabna Edward College |
| | Lahiri, Nirendrachandra | Carmichael College, Rangpur |
| | Lahiri, Rabindranath | Scottish Churches College |
| 530 | Lahiri, Rameschandra | Carmichael College, Rangpur |
| | Lakshmi Parshad | City College. |
| | Lakshmiprasad Awasthy | Vidyasagar College. |
| | Lodh, Jogeschandra | Comilla Victoria College |
| | M Nazir Ahmed | Presidency College |
| | M V Punnayya | Non-Collegiate Student, Roll Cal N 119 |
| | Mahammad Abdul Hameed | St Xavier's College. |
| | Mahammad Abdul Wahed, V | Non-Collegiate Student, Roll Syl N 1 |
| | Mahammad Aman Uddin | Ananda Mohan College, Mymensingh |
| | Mahammad Maniruddin | St Xavier's College. |
| 540 | Mahammad Nayebjan Mollick | Hughli College |
| | Mahammed Ishaque, I | Sylhet M. C. College |
| | Mahara, Bamacharan | Sylhet M C College |
| | Mahbub Uddin Ahmed Choudhuri | Sylhet M C. College. |
| | Mahomad Kismatali Biswas | Non-Collegiate Student, Roll Dau N 3, Daulatpur Hindu Academy |
| | Mahommad Ali Molla | Barisal B M. College |
| | Mahtabuddin Talukder | Pabna Edward College. |
| | Maitra, Baidyanath | Pabna Edward College. |
| | Maitra, Basantakumar | Carmichael College, Rangpur. |
| | Maitra, Mahendranath | Carmichael College, Rangpur. |
| 550 | Maitra, Manikchandra | Pabna Edward College. |
| | Maitra, Pijushkanti | Carmichael College, Rangpur. |
| | Maitra, Subodhkumar | Non-Collegiate Student, Roll Rang. N. 11, Carmichael College, Rangpur. |
| | Maji, Kartikchandra | Bankura Wesleyan College. |
| | Majibal Huque | Barisal B. M. College. |
| | Majumdar, Anandachandra | Bagerhat College. |
| | Majumdar, Biharilal | Bagerhat College. |

| | | |
|---|---|---|
| | Majumdar, Bijayratna | Non-Collegiate Student, Roll Bar N 14, Barisal B M College |
| | Majumdar, Bisweswar | Burdwan Raj College |
| | Majumdar Haralal | Uttarpara College |
| 560 | Majumdar, Haranchandra | Pabna Edward College |
| | Majumdar, Jyotischandra | Non-Collegiate Student, Roll Com N 19, Comilla Victoria College |
| | Majumdar, Manomohan | Non-Collegiate Student, Roll Dau N 5, Daulatpur Hindu Academy |
| | Maksud Ahamed | Comilla Victoria College |
| | Mal, Basantakumar | Ripon College |
| | Mandal, Baradacharan | Non-Collegiate Student, Roll Ber N 8, K N College, Berhampur |
| | Mandal, Bhabasindhu | K N College, Berhampur |
| | Mandal, Bidyadhar | Non-Collegiate Student, Roll Cal N 207, Bangabasi College. |
| | Mandal, Gaurhari | Ripon College |
| | Mandal, Gobindamohan | Non-Collegiate Student, Roll Ber N 13, K N College, Berhampur |
| 570 | Mandal Kalicharan | Rajshahi College |
| | Mandal Niradkumar | Ripon College |
| | Mandal Palanchandra | Ripon College |
| | Mandal, Sitansubhushan | K N College, Berhampur |
| | Manna, Syamsundar | St Xavier's College |
| | Manzoor Ahmad | St Xavier's College |
| | Masum Uddin Ahmed | Ananda Mohan College, Mymensingh |
| | Mazaffar Ahmed | Ripon College |
| | Md Abdul Aziz Mean | Rajshahi College |
| | Md Abdul Jabbar | Non-Collegiate Student, Roll Rang N 23, Carmichael College, Rangpur |
| 580 | Md Abdul Karim | Ananda Mohan College, Mymensingh |
| | Md Bashirulla | Comilla Victoria College |
| | Md Eusan Ali | Pabna Edward College |
| | Md Hossain Ali Mea | Ananda Mohan College, Mymensingh |
| | Md Moltat Ally | Barisal B M College |
| | Md Momiruddin Biswas | Bagerhat College |
| | Md Mostaizer Rahman | City College |
| | Md Mosudal Huq | K N College, Berhampur |
| | Md Mukhter Ahamed Chowdhowri | Chittagong College |
| | Md Nazirulla Mia | Barisal B M College |
| 590 | Md Nazabatullah | Pabna Edward College |
| | Md Rasekh Uddin Choudhury | Barisal B M College |
| | Md Samir Uddin | Ananda Mohan College, Mymensingh |
| | Md Shamsuddaullah | Cotton College, Gauhati |
| | Meherali Miah | Barisal B M College |
| | Mir Majed Ally | Barisal B M College |
| | Mir Nasrat Quadri Zulfaqor Ali | Non-Collegiate Student, Roll Far N 22 Faridpur Rajendra College |
| | Misra, Kamaleschandra | Narail Victoria College |
| | Misra, Srimohan | K N College, Berhampur |
| | Misra, Ushapati | Bankura Weslevan College |
| 600 | Mitra, Amarendranath | Non-Collegiate Student, Roll Cal N 275 South Suburban College |
| | Mitra, Bhabendrakrishna | St Xavier's College |
| | Mitra, Bibhaschandra | St Xavier's College |
| | Mitra, Dhirendranath | Daulatpur Hindu Academy |
| | Mitra, Gopalchandra | Narail Victoria College |
| | Mitra, Nisibhushan | Daulatpur Hindu Academy |
| | Mitra, Pankajkumar | Non-Collegiate Student, Roll Cal N 299 South Suburban College |
| | Mitra, Phanindranath | Vidyasagar College |
| | Mitra, Pulinbihari | Non-Collegiate Student, Roll Cal N 276 South Suburban College. |
| | Mitra, Sadhana | Bethune College |
| 610 | Mitra, Sambhudas | South Suburban College |
| | Mitra, Santilata | Diocesan College |
| | Mitra Sudhindranath | Narail Victoria College |
| | Mitra, Susilchandra | Sylhet M C College |
| | Mitra, Susilkumar | Daulatpur Hindu Academy |
| | Mohamad Abdul Hamid, II | Midnapur College |
| | Mohamed Ishaque | City College |
| | Mohamad Solaiman | St Xavier's College |
| | Mohamed Zahir Ali V | Non-Collegiate Student, Roll Cal N 78 Bangabasi College. |
| | Mohammad Abdul Hamid, I | Midnapur College |

| | | |
|---|---|---|
| 620 | Mohammad Mofizuddin Khan | Ripon College |
| | Mohammad Shamsul Huda | Barisal B. M. College. |
| | Mohammad Zahural Hoque | Non-Collegiate Student, Roll Bank N 8 Bankura Wesleyan College |
| | Mohammed Hossain | Chittagong College |
| | Mohammed Nurullah | Barisal B M. College |
| | Mohosenuddin Ahamad | Barisal B M College |
| | Monsuruddin Ahamed | Pabna Edward College |
| | Motahar Ali | Chittagong College. |
| | Moyenuddin Ahmed, I. | Carmichael College, Rangpur |
| | Moyenuddin Ahmed, II | Carmichael College, Rangpur |
| 630 | Muhammad Abdul Bari | Comilla Victoria College. |
| | Muhammad Aziz Mosser | Pabna Edward College. |
| | Muhammed Keramatali | Comilla Victoria College |
| | Mukhopadhyay, Abanindramohan | City College. |
| | Mukhopadhyay, Ahibhushan | Krishnagar College |
| | Mukhopadhyay, Aloknath | St Paul's College |
| | Mukhopadhyay, Amarendralal | Non-Collegiate Student,, Cal N 262 Presidency Colege |
| | Mukhopadhyay, Amulyachandra | South Suburban College. |
| | Mukhopadhyay, Balaichandra | City College. |
| | Mukhopadhyay, Bholanath | Bankura Wesleyan College |
| 640 | Mukhopadhyay, Debendranath | K. N. College, Berhampur. |
| | Mukhopadhyay, Ganesdas | Serampur College. |
| | Mukhopadhyay, Girindranath | Burdwan Raj College |
| | Mukhopadhyay, Himansuranjan | Vidyasagar College |
| | Mukhopadhyay, Hridayranjan | South Suburban College |
| | Mukhopadhyay, Kiritikumar | Bankura Wesleyan College |
| | Mukhopadhyay, Manmathanath | Comilla Victoria College |
| | Mukhopadhyay, Mrinalchandra | Ripon College |
| | Mukhopadhyay, Nalinichandra | Sylhet M C College |
| | Mukhopadhyay, Narahari | K. N College, Berhampur |
| 650 | Mukhopadhyay, Narayanchandra | Bankura Wesleyan College |
| | Mukhopadhyay, Niharranjan | Comilla Victoria College. |
| | Mukhopadhyay, Nirmalgopal | Presidency College |
| | Mukhopadhyay, Panchanan | Non-Collegiate Student, Roll Cal N 288, City College. |
| | Mukhopadhyay, Prankali | Bangabasi College |
| | Mukhopadhyay, Ramchandra | St Xavier's College. |
| | Mukhopadhyay, Ramakanta | Vidyasagar College |
| | Mukhopadhyay, Rasbihari | Burdwan Raj College |
| | Mukhopadhyay, Sachindranath | Non-Collegiate Student, Roll Cal N 198, St Paul's College. |
| | Mukhopadhyay, Sailendranath | Bangabasi College. |
| 660 | Mukhopadhyay, Sailendranath | Bankura Wesleyan College. |
| | Mukhopadhyay, Sarasija | Non-Collegiate Student, Krishnagar College |
| | Mukhopadhyay, Sasankasekhar | Bankura Wesleyan College |
| | Mukhopadhyay, Satischandra | Serampur College |
| | Mukhopadhyay, Satyacharan | Non-Collegiate Student, Roll Cal N 271, South Suburban College. |
| | Mundle, Bangabala | Diocesan College |
| | Munshee Momtaheruddin | Bagerhat College |
| | Mustaphi, Nareschandra | Vidyasagar College |
| | Nadimpalli Sarragu | Vidyasagar College |
| | Nag, Haralal | Faridpur Rajendra College |
| 670 | Nag, Syamapada | Non-Collegiate Student, Roll Bur N 7, Burdwan Raj College |
| | Namasudra, Balaram | Sylhet M C College |
| | Namasudra, Purnachandra | Sylhet M C College. |
| | Nandi, Harisadhan | Bankura Wesleyan College. |
| | Nandi, Phakirchand | Ripon College. |
| | Nandy, Mrinalbala | Diocesan College. |
| | Nath, Jadubar | Bagerhat College. |
| | Nath, Jogeschandra | Barisal B. M. College. |
| | Nath, Jogeschandra | Sylhet M. C. College. |
| | Nath, Sailendramohan | Cotton College, Gauhati |
| 680 | Nath, Satischandra | South Suburban College. |
| | Nath, Sudhirkrishna | Daulatpur Hindu Academy. |
| | Nazibulla Mollah | City College. |
| | Nazir Ahmad | Chittagong College. |
| | Nawalkishore Das | Non-Collegiate Student, Roll Cal. N. 44 |
| | Nawabjan Mia | Ripon College. |
| | Nezamuddin Ahmad | City College. |

| | | |
|---|---|---|
| | Niyogi, Anilchandra | Scottish Churches College |
| | Niyogi, Anathbandhu | South Suburban College. |
| | Niyogi, Nirmalchandra | Carmichael College, Rangpur. |
| 690 | Niogi Ranajitkumar | Bankura Wesleyan College |
| | Niyogi, Sudhendubikas | Chittagong College |
| | Surendrakumar | Non-Collegiate Student, Roll Cal N 156, Ripon College. |
| | Noor Uddin Haider | Bagerhat College. |
| | Nur Ahmad | Chittagong College. |
| | Nur Mahammed | Barisal B M. College |
| | Nurul Huda V | St Xavier's College |
| | Nur Muhammad Meah | Ananda Mohan College, Mymensingh |
| | Pal, Chandicharan | K N College, Berhampur |
| | Pal, Chintaharan | Barisal B M College |
| 700 | Pal, Gopeschandra | Sylhet M C College |
| | Pal, Kanailal | Non-Collegiate Student, Roll Cal N 290, Scottish Churches College |
| | Pal, Sasadhar | Hetampur Krishna Chandra College |
| | Pal, Sudhirkumar | Non-Collegiate Student, Roll Bag N 3, Bagerhat College |
| | Pal, Surendranath | Daulatpur Hindu Academy |
| | Pal, Upendranath V | K N College, Berhampur |
| | Palchaudhuri, Amiyakanti | Non-Collegiate Student, Roll Cal N 228, City College |
| | Panda, Ramachandra | K N College, Berhampur |
| | Pathak, Debiranjan | Carmichael College, Rangpur |
| | Pathak, Madanmohan | Cotton College, Gauhati |
| 710 | Patikar, Rakhalchandra | Faridpur Rajendra College |
| | Patra, Balaram | South Suburban College |
| | Patranabis, Pabitramohan | Ananda Mohan College, Mymensingh |
| | Paul, T J. | Serampur College |
| | Paulus Kanduna | St Paul's College |
| | Poddar, Kamalakanta | Non-Collegiate Student, Roll Cal N 220, City College |
| | Poddar, Ramchandra | Daulatpur Hindu Academy |
| | Pradhan, Chandidas | Ripon College |
| | Pradhan, Padamprasad | Presidency College |
| | Pradhan, Priyanath | Midnapur College |
| 720 | Pramanik, Prabalkumar | K N College, Berhampur |
| | Quazi Hamiduddin Ahmed | Bagerhat College |
| | Qhazi Md Fozlul Karim | Barisal B M College |
| | Rafiuddin Bakshi | St Xavier's College |
| | Raha, Bankimchandra | Faridpur Rajendra College |
| | Rahamatulla Biswas | Burdwan Raj College |
| | Rajabhau Waman Rao Bhate | Central College |
| | Rajgobinda Pandey | Non-Collegiate Student, Roll Cal N 195, Sanskrit College |
| | Rakshit, Harendrachandra | Victoria College, Cooch-Behar |
| | Rakshit, Sailendrakumar | Pabna Edward College |
| 730 | Ranatunga, C J | St Paul's College |
| | Ramdeo Sinha | Ripon College |
| | Ray, Amulyakumar | Ananda Mohan College, Mymensingh |
| | Ray, Anantakumar | Bagerhat College |
| | Ray, Anilkumar | Non-Collegiate Student, Roll Cal N 166, Ripon College |
| | Ray, Bhupendranath | City College. |
| | Ray, Bijaybhushan | K N College, Berhampur |
| | Ray, Birendranath | Rajshahi College |
| | Ray, Bishnuprasad | Non-Collegiate Student, Roll Cal N 256 Vidyasagar College |
| | Ray, Biswanath | Non-Collegiate Student, Roll Cal N 225, City College. |
| 740 | Ray, Debabrata | Comilla Victoria College. |
| | Ray, Dhirendranath | Rajshahi College |
| | Ray, Dhireschandra | Ananda Mohan College, Mymensingh |
| | Ray, Gaurgopal | K N College, Berhampur |
| | Ray, Haraprasanna | Non-Collegiate Student, Roll Bar N 29 Barisal B M College |
| | Ray, Haripada | City College. |
| | Ray, Himadrisekhar | Non-Collegiate Student, Roll Com N 8 Comilla Victoria College |
| | Ray, Hirendranath | Ananda Mohan College, Mymensingh |
| | Ray, Jnanendranath | Vidyasagar College |
| | Ray, Kailaschandra | Non-Collegiate Student, Coo N 5, Victoria College, Cooch-Behar |

| | | |
|---|---|---|
| 750 | Ray, Kalipada | Non-Collegiate Student, Roll Dau. N. 9. Daulatpur Hindu Academy. |
| | Ray, Kasiswar | Comilla Victoria College. |
| | Ray, Krishnadas | Non-Collegiate Student Roll Cal. N. 268, Presidency College. |
| | Ray, Kisorimohan | Bagerhat College. |
| | Ray, Lokendranath | Scottish Churches College |
| | Ray, Nabogopal | Midnapur College. |
| | Ray, Phanibhushan | Comilla Victoria College. |
| | Ray, Prabhaschandra | Rajshahi College. |
| | Ray, Prasaman | Carmichael College, Rangpur. |
| | Ray, Sachindranath | Carmichael College, Rangpur. |
| 760 | Ray, Saileschandra | Ananda Mohan College, Mymensingh. |
| | Ray, Satyendranath | Victoria College, Cooch-Behar |
| | Ray, Sureschandra | Vidyasagar College |
| | Ray, Susilkumar | Scottish Churches College. |
| | Ray, Tarakeswar | Faridpur Rajendra College. |
| | Raychaudhuri, Bhupalchandra | K. N College, Berhampur. |
| | Raychaudhuri, Bhupendrakumar | Daulatpur Hindu Academy |
| | Raychaudhuri, Birendrabijay | Barisal B M. College |
| | Raychaudhuri, Gunendrakumar | Presidency College |
| | Raychaudhuri, Jnanendranath | Non-Collegiate Student, Roll Baul N 7, Rajshahi College |
| 770 | Raychaudhuri, Manoranjan | Bankura Wesleyan College |
| | Raychaudhuri, Murarimohan | St Xavier's College. |
| | Raychaudhuri, Prabhaschandra | Scottish Churches College |
| | Raychaudhuri, Pramodkumar | South Suburban College |
| | Raychaudhuri, Sachindranath | Non-Collegiate Student, Roll Cal N 272 South Suburban College |
| | Raychaudhuri, Sudhansusekhar | South Suburban College. |
| | Raychaudhuri, Syamapada | Scottish Churches College |
| | Raymahasay, Kalikadas | Burdwan Raj College. |
| | Raymandal, Sasibhushan | Daulatpur Hindu Academy |
| | Raymaulik, Arunkumar | Faridpur Rajendra College |
| 780 | Rehajuddin Shaikh | Bagerhat College. |
| | Ruzhukhrie Angami | Non-Collegiate Student, Roll. Cal N. 197, St Paul's College. |
| | S M. Abdul Bari | Comilla Victoria College. |
| | S M Afzulur Rahaman | Comilla Victoria College |
| | S M Qudrul Hasan Ahmadir | St Xavier's College |
| | S Zaheer Ahmad | Presidency College |
| | Sabdarali | Comilla Victoria College. |
| | Sadrul Hossain | Comilla Victoria College. |
| | Safiul Islam | Comilla Victoria College |
| | Saha, Bharatchandra | Non-Collegiate Student, Roll Bar N 58 Barisal B. M. College. |
| 790 | Saha, Dinabandhu | Bangabasi College. |
| | Saha, Jibankrishna | Ripon College. |
| | Saha, Jogendranath | Pabna Edward College |
| | Saha, Mahendranath | Carmichael College, Rangpur |
| | Saha, Pranhari | K N College, Berhampur. |
| | Saha, Saratchandra | Bagerhat College |
| | Saha, Sureschandra | Narail Victoria College |
| | Saha, Upendrachandra | Ananda Mohan College, Mymensingh |
| | Sahu, Kankabati | Bethune College. |
| | Sajjad Ali | Sylhet M. C. College |
| 800 | Saksena, Krishnakumar | Non-Collegiate, Roll Gau N 5 Cotton College, Gauhati. |
| | Samaddar, Gopalchandra | Bagerhat College. |
| | Samanta, Krishnachandra | South Suburban College. |
| | Samanta, Taragati | Bankura Wesleyan College |
| | Sant Prasad Singh | City College. |
| | Sanyal, Krishnaprasad | City College. |
| | Sanyal, Ramkrishna | Vidyasagar College. |
| | Sanyal, Tarniprasanna | Non-Collegiate Student, Roll Rang. N. 12, Carmichael College, Rangpur. |
| | Sarangi, Nabakumar | Midnapur College. |
| | Sarar. Jogendrachandra | Sylhet M. C. College. |
| 810 | Sardar, Kunjabihari | Bangabasi College. |
| | Sarkar, Bhabeschandra | Non-Collegiate Student, Roll Pab N. 13, Pabna Edward College. |
| | Sarkar, Brajendrakumar | Pabna Edward College. |
| | Sarkar, Dhirendranath | Narail Victoria College. |

| | | |
|---|---|---|
| | Sarkar, Hemantakumar | K N College. Berhampur |
| | Sarkar, Jagadananda | Victoria College, Cooch-Behar |
| | Sarkar, Jnanendranath | South Suburban College. |
| | Sarkar, Jogeschandra | Bagerhat College |
| | Sarkar, Jyotischandra | Rajshahi College. |
| | Sarkar, Krishnachandra | Ripon College. |
| 820 | Sarkar, Kshitischandra | Pabna Edward College. |
| | Sarkar, Narendranath | Rajshahi College. |
| | Sarkar, Niradbaran | Bangabasi College |
| | Sarkar, Nirendrachandra | Non-Collegiate Student, Roll Dau. N 10, Daulatpur Hindu Academy |
| | Sarkar, Ramanimohan | Ripon College. |
| | Sarkar, Rameschandra | Ripon College |
| | Sarkar, Satischandra | Comilla Victoria College |
| | Sarkar, Sudhirchandra | Carmichael College, Rangpur |
| | Sarkar, Surendranarayan | Pabna Edward College. |
| | Sarkar, Suresgobinda | Rajshahi College |
| 830 | Sarma, Lakshmikanta | Cotton College, Gauhati. |
| | Sarma, Nagendrachandra | Cotton College, Gauhati |
| | Sarmabarkataki, Dambarudhar | Non-Collegiate Student, Roll Gau N 1, Cotton College, Gauhati |
| | Satchita Nand | St Paul's College |
| | Sayed Ahamed | Non-Collegiate Student, Roll Bar N 42, Barisal B M College |
| | Sen, Atulchandra | Faridpur Rajendra College |
| | Sen, Hariprasanna | Chittagong College |
| | Sen, Kamaleschandra | Presidency College |
| | Sen, Kesabchandra | Non-Collegiate Student, Roll Cal N 227, City College |
| | Sen, Krishnaprasad | Carmichael College, Rangpur |
| 840 | Sen, Nripendranath | Vidyasagar College |
| | Sen, Prabhaschandra | Non-Collegiate Student, Roll Cal N 238, City College |
| | Sen, Sasindrachandra | Sylhet M C College |
| | Sen, Sudhirchandra | Comilla Victoria College |
| | Sen, Sukhendubikas | Faridpur Rajendra College |
| | Sengupta, Binaybhushan | South Suburban College |
| | Sengupta, Hiranyakumar | Barisal B M College |
| | Sengupta, Jatindranath | Non-Collegiate Student, Roll Bar N 56, Barisal B M College |
| | Sengupta, Jaygopal | Chittagong College |
| | Sengupta, Manikrishna | Carmichael College, Rangpur. |
| 850 | Sengupta, Manmathanath | Barisal B M College. |
| | Sengupta, Manmathanath | Non-Collegiate Student, Roll Cal N 289, Scottish Churches College |
| | Sengupta, Narendranath, I | Barisal B M College |
| | Sengupta, Narendranath, II | Barisal B. M College |
| | Sengupta, Nirmalkanta | Non-Collegiate Student, Roll Bar. N 5, Barisal B M College. |
| | Sengupta, Pratulkrishna | Comilla Victoria College |
| | Sengupta, Sachindranath | Carmichael College, Rangpur |
| | Sengupta, Sailendrasekhar | Comilla Victoria College |
| | Sengupta, Satyaprasanna | City College |
| | Sengupta, Sudhansubhushan | Non-Collegiate Student, Roll Bar N 27, Barisal B M College |
| 860 | Serajul Hoque | Chittagong College |
| | Shah Afzal Imam | City College |
| | Shahadat Ullah | Non-Collegiate Student, Roll Cal N 169, Ripon College |
| | Shaik Abdul Gani | Cotton College, Gauhati |
| | Shaik Abdul Huque | Ripon College |
| | Shaikh Jobedali | K N College, Berhampur |
| | Shaikh Maqbul | Non-Collegiate Student, Roll Cal N 15 |
| | Shaikh Reazat Ali | Rajshahi College |
| | Shaikh Shahadat Hossain | St Xavier's College |
| | Shamser Miah | Comilla Victoria College |
| 870 | Shamsuddin Ahmed, II | Carmichael College, Rangpur |
| | Shamsul Haque | Barisal B. M. College |
| | Shamsul Huda | Chittagong College. |
| | Sheikh Shamsul Hoque | Barisal B M. College |
| | Shi, Binodbihari | Non-Collegiate Student, Roll Cal N 43 |
| | Shitala Jagadambaprasad Mishra | Vidyasagar College |
| | Shyamsundar Mishra | Vidyasagar College |
| | Sikdar, Bishnupada | Narail Victoria College |

| | | |
|---|---|---|
| | Sikdar, Brajendranath | Faridpur Rajendra College. |
| | Sikdar, Jaminiranjan | Burdwan Raj College. |
| 880 | Sil, Hrishikes* | Hughli College |
| | Sil, Karmadhar | City College. |
| | Sil, Manomohan | Non-Collegiate Student, Roll Bar. N. 20, Barisal B. M. College. |
| | Sinha, Anadiranjan | Bangabasi College. |
| | Sinha, Anilkumar | Bankura Wesleyan College. |
| | Sinha, Anukulchandra | Pabna Edward College. |
| | Sinha, Kailaspati | Sanskrit College. |
| | Sinha, Nagendrakumar | K N College, Berhampur. |
| | Sinha, Nripendranarayan | Non-Collegiate Student, Roll Cal N. 158, Ripon College. |
| | Sinha, Rudrapratap | St Paul's College. |
| 890 | Sinha, Sitaram | Non-Collegiate Student, Roll Ber N 14, K N College, Berhampur. |
| | Sinha, Surathchandra | Bankura Wesleyan College |
| | Sinharay, Mahadeb | Krishnagar College. |
| | Sk Alla Hafez | St Xavier's College. |
| | Som, Kshitischandra | Victoria College, Cooch-Behar |
| | Sriman, Lalitmohan | Ripon College |
| | Sur, Bhupendranath | City College |
| | Surchaudhuri, Pyarimohan | Non-Collegiate Studnet, Roll Com N 21, Comilla Victoria College |
| | Suraj Narayan Lal | Ripon College |
| | Syam, Radhikaranjan | Sylhet M C. College |
| 900 | Syed Abul Khairat Md Hussain | Cotton College, Gauhati. |
| | Syed Abu Ebrahim | Carmichael College, Rangpur |
| | Syed Ahamed | Barisal B M College |
| | Syed Enamal Haque | Midnapur College. |
| | Syed Mohammad Mirzahirul Alam (V) | Non-Collegiate Student, Roll Cal N. 257, St Xavier's College. |
| | Syed Mumtaz Hossain | St Xavier's College |
| | Syed Munir Hossain | St Xavier's College |
| | Syed Nanna Miah | Comilla Victoria College. |
| | Syed Nehal Hossain | Barisal B M College |
| | Syed Sadiuddin Ahmad | Non-Collegiate Student, Roll Cal N 183, St Xavier's College |
| 910 | Tahasin Uddin Ahamed | Non-Collegiate Student, Roll Rang N 18, Carmichael College, Rangpur |
| | Talukdar, Adichandra | Chittagong College |
| | Talukdar, Sisirkumar | Ananda Mohan College, Mymensingh |
| | Talukdar, Sudhansubhushan | K N College, Berhampur |
| | Taluqueder Naim Uddin | Pabna Edward College |
| | Tambuli, Sasibhushan | Bagerhat College |
| | Taran, Satischandra | Comilla Victoria College |
| | Taraphdar, Tuhinbala | Bethune College |
| | Taraprasad Khound | Cotton College, Gauhati |
| | Toyabul Hossain | Non-Collegiate Student, Roll Far N 23, Rajendra College, Faridpur |
| 920 | Tripuraneni Sivaprasada Rao | Vidyasagar College. |
| | Tripuri S Naidu | Diocesan College. |
| | Uditnarain Prasad | Ripon College. |
| | Upadhyay, Sahasraksha | K N. College, Berhampur |
| | Varghese, P M | Serampur College |
| | Vepa Jagannathamurti | Non-Collegiate Student, Roll Cal N. 126 |
| | Wahidur Rohman | Cotton College, Gauhati. |
| 927 | Zahed Ali Pramanik | Rajshahi College |

THIRD DIVISION

*Arranged in Alphabatical order*

| | |
|---|---|
| A. I. Muhommad Abdur Rouf | Bagerhat College. |
| Abdul Aziz Ahamed | Carmichael College, Rangpur. |
| Abdul Bary Chowdhury | Comilla Victoria College. |
| Abdul Hamid Mollick | Faridpur Rajendra College. |
| Abdul Mannan | Non-Collegiate Student, Roll Cal N. 252. City College. |

* Non-Collegiate in French only

| | | |
|---|---|---|
| | Abdus Sabur | Sylhet M. C. College |
| | Abdus Samad | Sylhet M. C. College. |
| | Abdus Samad Quraishi | St. Xavier's College. |
| | Abrar Ali | Sylhet M. C College. |
| 10 | Abu Mahammed Danesh | Chittagong College |
| | Acharyya, Mahendranath | Faridpur Rajendra College. |
| | Adhikari Chittamohan | City College. |
| | Agarwala Shyamkrishna | Roll Cal. N. 111, Central College |
| | Aich, Praphullakumar | Non-Collegiate Student, Roll Cal. N. 108, Vidyasagar College. |
| | Ahar Rahman | Barisal B M. College. |
| | Ashmat Ali | Comilla Victoria College. |
| | Asu-Uddin Ahmed | Carmichael College, Rangpur |
| | Ayen Uddin Ahmed | City College. |
| | Bagchi, Bhupendranath | Pabna Edward College. |
| 20 | Bagchi, Purnachandra | Roll Cal N. 196, St. Paul's College |
| | Bal, Chunilal | Ananda Mohan College, Mymensingh |
| | Baksi, Mohinimohan | Victoria College, Cooch-Behar. |
| | Bandyopadhyay, Amalkanti | Barisal B M College |
| | Bandyopadhyay, Asutosh | Barisal B M. College |
| | Bandyopadhyay, Charuchandra | South Subarban College. |
| | Bandyopadhyay, Jagannath | Krishnagar College. |
| | Bandyopadhyay, Kasinath | South Subarban College |
| | Bandyopadhyay, Manilal | South Subarban College. |
| | Bandyopadhyay, Mohinimohan | Non-Collegiate Student, Roll Bur N 10, Ripon College. |
| 30 | Bandyopadhyay, Nripendranath | K N College, Berhampur |
| | Bandyopadhyay, Paresnath | Ananda Mohan College, Mymensingh |
| | Bandyopadhyay, Pulinbihari | Narail Victoria College. |
| | Bandyopadhyay, Saileschandra | Comilla Victoria College |
| | Bandyopadhyay, Sambhunath | Burdwan Raj College |
| | Bandyopadhyay, Satyacharan | Bankura Wesleyan College |
| | Bandyopadhyay, Sureschandra | Faridpur Rajendra College |
| | Baruya, Debinath | Cotton College, Gauhati |
| | Bashiruddin Ahmedmajudar | Non-Collegiate Student, Roll Cal N 261 Presidency College |
| | Basu, Amarnath | St Xavier's College |
| 40 | Basu, Atulchandra | Non-Collegiate Student, Roll Coo N 8, Victoria College, Cooch-Behar |
| | Basu, Bijanbihari | Ripon College |
| | Basu, Haripada | Non-Collegiate Student, Roll Nar N 4, Narail Victoria |
| | Basu, Jyotirmay | Non-Collegiate Student, Roll Cal N 107 Vidyasagar College |
| | Basu, Sachindranath | Scottish Churches College |
| | Basu, Suratchandra | Ripon College. |
| | Basu, Syamapada | Ripon College |
| | Bera, Jnanendranath | Non-Collegiate Student, Roll Mid N 2, Midnapur College |
| | Bhadar, Akhilchandra | Non-Collegiate Student, Roll Cal N 277, South Subarban College. |
| | Bharadwaj, Makhanlal | Non-Collegiate Student, Roll Com. N 12 Comilla Victoria College. |
| 50 | Bhattacharyya, Abanikumar | Non-Collegiate Student, Roll Com N 13 Comilla Victoria College. |
| | Bhattacharyya, Annadacharan | Carmichael College, Rangpur |
| | Bhattacharyya, Jugulkisor | Non-Collegiate Student, Roll Cal N 270 |
| | Bhattacharyya, Krishnadhan | Non-Collegiate Student, Roll Cal N 65, Vidyasagar College. |
| | Bhattacharyya, Saradakanta | South Subarban College. |
| | Bhattacharyya, Satischandra | Non-Collegiate Student, Roll Bar N 17, Barisal B. M College |
| | Bhaumik, Akshaykumar | Victoria College, Cooch-Behar. |
| | Bhaumik, Jagadischandra | City College |
| | Bhaumik, Jogendranath | Narail Victoria College. |
| | Biswas, Bhutnath | Bankura Wesleyan College |
| 60 | Biswas, Birupaksha | Burdwan Raj College. |
| | Biswas, Gayanath | Daulatpur Hindu Academy. |
| | Biswas, Haripada | Victoria College, Cooch-Behar. |
| | Biswas, Haripada. | Rajshahi College. |
| | Biswas, Khagendranath | K N College, Berhampur |
| | Biswas, Purnachandra | K. N College, Berhampur |
| | Biswas, Rammohan | Ananda Mohan College, Mymensingh |
| | Biswas, Sasibhushan | Daulatpur Hindu Academy. |
| | Brahma, Hemantakumar | Barisal B. M College |
| | Chaki, Priyamadhab | Hetampur Krishna Chandra College. |

| | | |
|---|---|---|
| 70 | Chakrabarti, Haralal | Barisal B M. College. |
| | Chakrabarti, Jogendranarayan | Barisal B M College. |
| | Chakrabarti, Jyotischandra | Ripon College. |
| | Chakrabarti, Jyotischandra | Sylhet M. C. College |
| | Chakrabarti, Manmathanath | City College. |
| | Chakrabarti, Nikhilkanta | Rajshahi College. |
| | Chakrabarti, Priyanath | Comilla Victoria College. |
| | Chakrabarti, Usharanjan | Carmichael College, Rangpur. |
| | Chakrabarti, Suryyakanta | Bagerhat College. |
| | Chanda, Sasimohan | Pabna Edward College |
| 80 | Chandra, Bholanath | City College |
| | Chaudhuri, Anangamohan | Chittagong College |
| | Chaudhuri, Asutosh | City College |
| | Chaudhuri, Brindaban | Burdwan Raj College |
| | Chaudhuri, Manindrakisor | Pabna Edward College |
| | Chaudhuri, Sasadhar | Bankura Wesleyan College. |
| | Chaudhuri, Umacharan | Cotton College, Gauhati |
| | Chitalapudi Subba Rao | Non-Collegiate Student, Roll Cal N 123, |
| | Chattopadhyay, Amivalal | City College. |
| | Chattopadhyay, Harendranath | City College. |
| 90 | Chattopadhyay, Kesablal | Barisal B M. College. |
| | Chattopadhyay, Sanjibchandra | St Xavier's College |
| | Chattopadhyay, Satyakinkar | Roll Cal. N. 193, Sanskrit College |
| | Chattopadhyay, Surendramohan | Pabna Edward College. |
| | Chattopadhyay, Susilpati | Uttarpara College |
| | Chattopadhyay, Tulsicharan | Ripon College. |
| | Das, Baikunthanarain | Victoria College, Cooch-Behar |
| | Das, Bijayratan | Barisal B M. College. |
| | Das, Girindranath | Midnapur College. |
| | Das, Kshirodkumar | Victoria College, Cooch-Behar |
| 100 | Das, Radhakrishna | City College. |
| | Das, Sashibhushan | Daulatpur Hindu Academy |
| | Das, Sukhendubikas | South Suburban College. |
| | Das, Surendranath I | Barisal B M. College |
| | Das, Tribhanga | K N College, Berhampur |
| | Dasgupta, Amarnath | Non-Colegiate Student, Roll Chi N 16, Chittagong College |
| | Dasgupta, Amiyaranjan | Bangabasi College. |
| | Dasgupta, Kumudranjan | Non-Collegiate Student, Roll Chi N 18, Chittagong College. |
| | Dasgupta, Pradyotkumar | Non-Collegiate Student, Roll Cal N 273, South Suburban College. |
| | Dasgupta, Pramathanath | Faridpur Rajendra College |
| 110 | Dasgupta, Pramodranjan | City College. |
| | Dasgupta, Sudhirranjan | Barisal B M. College. |
| | Dasgupta, Susilkumar | Non-Collegiate Student, Roll Far. N 2 Faridpur Rajendra College |
| | Datta, Debiprasad | City College. |
| | Datta, Bhupendramohan | Non-Collegiate Student, Roll Far N 8, Faridpur Rajendra College |
| | Datta, Harendrakrishna | Narail Victoria College. |
| | Datta, Jogeschandra | Ananda Mohan College, Mymensingh |
| | Datta, Jogeschandra | Rajshahi College. |
| | Datta, Khagendranath | Vidyasagar College. |
| | Datta, Jyotischandra | Non-Collegiate Student, Roll Cal. N. 213, City College. |
| 120 | Datta, Nanlinikanta | Ananda Mohan College, Mymensingh |
| | Datta, Narendramohan | Non-Collegiate Student, Roll Cal N 13, |
| | Datta, Nirmalchandra | Ripon College |
| | Datta, Rabindranath | Daulatpur Hindu Academy |
| | Datta, Surendranath | Rajshahi College. |
| | Dattapurkayastha, Aswinikumar | Sylhet M. C. College. |
| | De, Bhuteschandra | Vidyasagar College |
| | De, Dhirendralal | Bangabasi College. |
| | De, Kaminikumar | Faridpur Rajendra College. |
| | De, Kumarkrishna | Ripon College. |
| 130 | De, Rameshranjan | Sylhet M. C. College. |
| | De, Sasimohan | Pabna Edward College. |
| | De, Sudhanwakumar | Pabna Edward College. |
| | De, Surendrachandra | Faridpur Rajendra College. |
| | De, Upendranarayan | Ananda Mohan College, Mymensingh. |
| | Debnath, Annadacharan | Non-Collegiate Student, Roll Bar. N. 51, Barisal B. M. College. |
| | Desarkar, Priyanath | Ananda Mohan College, Mymensingh. |
| | Bhandarkar, G. A. | City College. |

| | | |
|---|---|---|
| | Oak, Ganes Sadashiv | Vidyasagar College. |
| | Gangopadhyay, Jitendralal | Non-Collegiate Student, Roll Cal N 233, City College. |
| 140 | Gangopadhyay, Niharprakas | Non-Collegiate Student, Roll Cal N 149, Ripon College |
| | Gayen, Upendranath | Midnapur College. |
| | Ghosh, Achintyakumar | Bagerhat College |
| | Ghosh, Bhimchandra | K N. College, Berhampur |
| | Ghosh, Bhupendranath | Vidyasagar College |
| | Ghosh, Pramodranjan | Serampur College |
| | Ghosh, Ramdas | Uttarpara College |
| | Ghosh, Sankarkumar | Vidyasagar College |
| | Ghosh, Satyendranath | Ananda Mohan College, Mymensingh |
| | Ghosh, Sisirkumar | South Subarban College |
| 150 | Ghosh, Sureschandra | Serampur College. |
| | Ghoshray, Bhupendramohan | Barisal B M College |
| | Goswami, Panchkari | Non-Collegiate Student, Roll Ber N 6 Berhampur K N. College |
| | Goswami, Surendralal | Non-Collegiate Student, Roll Cal N 118 Vidyasagar College. |
| | Guha, Pasupatinath | Vidyasagar College |
| | Guha, Satischandra | Faridpur Rajendra College |
| | Gupta, Kshitischandra | Sylhet M C College |
| | Gupta, Sudhirkumar | Non-Collegiate Student, Roll Bar N 2[illegible], Barisal B M College |
| | Gurung, Dhrubasingh | Cotton College, Gauhati |
| | Hajra, Jnanendranath | St Xavier's College |
| 160 | Haldar, Phanibhushan | Non-Collegiate Student, Roll Cal N 165, Ripon College |
| | Smellie, Harry Solomon Dube | Serampur College |
| | Hassanali | Comilla Victoria College |
| | Hor, Surendrakumar | Ripon College |
| | Hossonazzaman | Feni College |
| | Hyder Ali Tarafdar | Ananda Mohan College, Mymensingh |
| | Isahaque Ali | Cotton College, Gauhati |
| | Jahar Uddin Ahmed | Carmichael College, Rangpur |
| | Jhan, Mritunjay | Rajshahi College |
| | John, C O. | St Paul's College |
| 170 | Kalimuddin Biswas | Rajshahi College |
| | Karamali Khan | Non-Collegiate Student, Roll Bar N 47, Barisal B M College |
| | Kar, Amlendralal | Vidyasagar College |
| | Kar, Chintaharan | Comilla Victoria College |
| | Khandaker Reza Hossain | Non-Collegiate Student, Roll Cal N 241, City College. |
| | Khandker Abdul Hakim | Ananda Mohan College, Mymensingh |
| | Khondaker Abu Tahir | Ripon College |
| | Konar, Bijaybasanta | Burdwan Raj College |
| | Kumar, Tinkari | Bangabasi College |
| | Lahiri, Jitendranath | Ripon College |
| 180 | Lala, Krishnamohan | Bangabasi College |
| | Mahamed Nural Islam | Bangabasi College |
| | Mahammad Aminul Islam | K. N. College, Berhampur |
| | Mahammad Mandal | Ripon College. |
| | Mahammad Serajal Islam | Feni College |
| | Mahammad Shamsul Allum | Bagerhat College |
| | Mahammad Nobi Hossain | Ananda Mohan College, Mymensingh |
| | Maitra, Banwarilal | Non-Collegiate Student, Roll Cal N 232, City College. |
| | Majumdar, Dhirendranath | Victoria College, Cooch-Behar |
| | Majumdar, Girischandra | Faridpur Rajendra College |
| 190 | Majumdar, Pramodchandra, II | Non-Collegiate Student, Roll Bur N 5, Burdwan Raj College |
| | Majumdar, Praphullachandra | Pabna Edward College |
| | Majumdar, Rebatimohan, I | Comilla Victoria College |
| | Majumdar, Sailendranath | City College. |
| | Makabbir Ali Majumdar | Sylhet M C College |
| | Malakar, Benimadhab | Daulatpur Hindu Academy |
| | Mallik, Bhupatibhushan | Non-Collegiate Student, Roll Bur N 5 Burdwan Raj College. |
| | Mallik, Himansubhushan | South Subarban College |
| | Mandal, Manindranath | St Paul's College |
| | Mandal, Raimohan | Burdwan Raj College |
| 200 | Manjuruddin Ahmed | Carmichael College, Rangpur |
| | Maslehuddin Ahmed | Comilla Victoria College |

| | | |
|---|---|---|
| | Md. Abdul Aziz Taluqder | Ananda Mohan College, Mymensingh. |
| | Md. Abdus Samad | Barisal B. M. College. |
| | Md. Atwar Rahman Khan | Ripon College. |
| | Md. Basaratali | Comilla Victoria College. |
| | Md. Ebadulla Farazi | Ananda Mohan College, Mymensingh. |
| | Md Maniruddin Ahmad | Non-Collegiate Student, Roll Cal. N 242, City College. |
| | Md. Mia Hussain | Ananda Mohan College, Mymensingh. |
| | Md. Moazzam Ali | Pabna Edward College. |
| 210 | Md. Monsur Aly | Non-Collegiate Student, Roll Pab N. 3, Pabna Edward College. |
| | Md. Mosael Haque | Carmichael College, Rangpur. |
| | Md Mumtazali Khan | St Xavier's College. |
| | Md Serazal Hoque | Comilla Victoria College. |
| | Md Shamsul Hoque | Ananda Mohan College, Mymensingh. |
| | Mirza Md Nurol Hoque | Pabna Edward College |
| | Misra, Anantalal | Non-Collegiate Student, Roll Cal. N. 23. |
| | Mitra, Analchandra | Bangabasi College |
| | Mitra, Arunkumar | St. Xavier's College. |
| | Mitra, Sudhirchandra | Ripon College. |
| 220 | Mitra Sureshchandra | Bagerhat College. |
| | Mitra, Tejendranath | Vidyasagar College |
| | Moazzam Hossain Choudhury | Non-Collegiate Student, Roll Rang N 15, Carmichael College, Rangpur. |
| | Mohammadali | Comilla Victoria College |
| | Mohammad Lalmia | Barisal B M. College. |
| | Mohammad Nurul Huda | Faridpur Rajendra College |
| | Mohammad Ommedali | Bangabasi College. |
| | Mohammed Nizamuddin | Rajshahi College |
| | Mohammed Shamsuddin | Rajshahi College |
| | Mokbul Ahamed | Non-Collegiate Student, Roll Bar. N. 41, Barisal B. M. College. |
| 230 | Mukhopadhyay, Amarnath | Midnapur College |
| | Mukhopadhyay, Amulyaratan | Bangabasi College. |
| | Mukhopadhyay, Arunchandra | City College. |
| | Mukhopadhyay, Chandrakanta | Barisal B M College |
| | Mukhopadhyay, Haripada | Scottish Churches College, Roll Cal N 291. |
| | Mukhopadhyay, Indrachandra | Bangabasi College |
| | Mukhopadhyay, Indranath | Hughli College |
| | Mukhopadhyay, Mallanath | Krishnagar College |
| | Mukhopadhyay, Manoranjan | City College |
| | Mukhopadhyay, Prabodhkumar | South Subarban College |
| 240 | Mukhopadhyay, Sarojnath | Uttarpara College. |
| | Naik, Kunjaban | Serampur College |
| | Nandi, Haridas | Roll Cal. N. 145, Ripon College. |
| | Nasiruddin Ahmed | Rajshahi College. |
| | Nasimazzaman | Rajshahi College. |
| | Nath, Singheswar | Ripon College |
| | Nobuliot | Sylhet M C. College |
| | Nural Haque | Comilla Victoria College |
| | Nurul Hussain Choudhury | Sylhet M C College |
| | Olipshon | Sylhet M. C. College |
| 250 | Pain, Tarakdas | Hughli College. |
| | Pal, Girindrachandra | Comilla Victoria College. |
| | Pal, Kaminikumar | Comilla Victoria College. |
| | Pal, Manimohan | Bagerhat College. |
| | Pal, Surendrachandra | Sylhet M. C College |
| | Pal, Syamapada | Daulatpur Hindu Academy |
| | Pal, Taranath | Ripon College. |
| | Palchaudhuri, Khagendramohan | South Subarban College. |
| | Palchaudhuri, Radhakanta | Pabna Edward College. |
| | Palit, Atalbihari | Faridpur Rajendra College. |
| 260 | Poddar, Giridharilal | City College. |
| | Priya, Gopendraballabh | City College. |
| | Ray, Bhupatimohan | Non-Collegiate Student, Roll Com. N. 7, Comilla Victoria College. |
| | Ray, Bibhutibhushan, I | Vidyasagar College. |
| | Ray, Dhirendranath | Narail Victoria College. |
| | Ray, Kshetramohan | Ananda Mohan College, Mymensingh. |
| | Ray, Kshirodkanta | Non-Collegiate Student, Roll Coo. N. 11, Victoria College, Cooch-Behar. |
| | Ray, Lalitmohan | Bagerhat College. |
| | Ray, Lilanand Narayan | South Subarban College. |
| | Ray, Manindranath | K. N. College, Berhampur. |

| | | |
|---|---|---|
| 270 | Ray, Ramprabodh | Carmichael College, Rangpur |
| | Ray, Susilkumar | South Suburban College |
| | Ray, Usharanjan | South Suburban College |
| | Raychaudhuri, Nirmalbhushan | Bagerhat College. |
| | Raychaudhuri, Sudhirchandra | Non-Collegiate Student, Roll Cal. N 269, Vidyasagar College |
| | Raychaudhuri, Sarojbandhu | Daulatpur Hindu Academy |
| | Richards, Fredick W | St Paul's College. |
| | Saha, Basantalal | Ripon College. |
| | Saha, Gangacharan | City College |
| | Saha, Naliniranjan | Comilla Victoria College |
| 280 | Saha, Pranballabh | City College. |
| | Saha, Surendranath | City College |
| | Saim Uddin Talukdar | Non-Collegiate Student, Roll Rang N 17 Carmichael College, Rangpur |
| | Samaddar, Rajendralal | Daulatpur Hindu Academy |
| | Sanyal, Annadaprasanna | Krishnagar College. |
| | Sanyal, Phanindramohan | St Xavier's College |
| | Sarkar, Chittatosh | Non-Collegiate Student Roll Cal N 167, Ripon College |
| | Sarkar, Jatindranath | Pabna Edward College |
| | Sarkar, Juthika | Bethune College |
| | Sarkar, Praphullachandra | Ananda Mohan College, Mymensingh |
| 290 | Sarkar, Ramchandra | Bagerhat College |
| | Sarkar, Saileschandra | City College |
| | Sarkar, Sureschandra | City College |
| | Sarkar, Susilchandra | Pabna Edward College |
| | Sarma, Pramodchandra | Sylhet M C College |
| | Sen, Bimalchandra | Rajshahi College |
| | Sen, Bishnucharan | South Suburban College |
| | Sen, Chandicharan | Hughli College |
| | Sen, Golapchandra | Sanskrit College |
| | Sen, Nirmalcharan | Rajshahi College |
| 300 | Sen, Ramendranath | Bangabasi College |
| | Sen, Sudhirchandra | Non-Collegiate Student, Roll Rang N 13, Carmichael College, Rangpur |
| | Sengupta, Asutosh | Non-Collegiate Student, Roll Bar N 16 Barisal B M College |
| | Sengupta, Binodbihari | Comilla Victoria College |
| | Sengupta, Dhirendralal | Faridpur Rajendra College |
| | Sengupta, Kalipada | Bangabasi College |
| | Sengupta, Satibhushan | Ripon College |
| | Sengupta, Satyaranjan | Non-Collegiate Student, Roll Bar N 26, Barisal B M College |
| | Sengupta, Sudhirchandra | Non-Collegiate Student, Roll Bar N 32, Barisal B. M College |
| | Serajuddin Khan | Barisal B M College. |
| 310 | Shaikh Meraj Hossain | K N College, Berhampur |
| | Shafiquer Rahman | Comilla Victoria College |
| | Shamsuddin Ahmed, I | Carmichael College, Rangpur |
| | Shamsul Huque | Non-Collegiate Student, Roll Far N 21, Rajendra College, Faridpur |
| | Sikdar, Satindranath | Cotton College, Gauhati |
| | Sinha, Kalidas | Non-Collegiate Student, Roll Cal N 179, St Xavier's College. |
| | Sinha, Ramanath | Vidyasagar College |
| | Sinhachaudhuri, Gopiballabh | Serampur College |
| | Syed Azizur Rahman | Ananda Mohan College, Mymensingh |
| | Syed Shah Mohammed Mostafa | Comilla Victoria College |
| 320 | Tambuli, Rajkumar | Bagerhat College |
| | Tewari, Rajaram | Non-Collegiate Student, Roll Cal N 45 |
| | Thomas P. Niran | Serampur College. |
| | Sadatzzaman Chaudhuri | Carmichael College, Rangpur |
| | Umerali Ahmed | Carmichael College, Rangpur |
| | Wazedali Khan | City College |
| 326 | Yadeo Narhar Komti | City College |

The undermentioned candidates who were allowed to appear at the I A. Examination, 1923, in one or more subjects, are declared to have passed in the subject or subjects:—

SANSKRIT.

| | | |
|---|---|---|
| | Bandyopadhyay, Amarnath | Non-Collegiate Student, Roll Cal N 137 |
| | Bandyopadhyay, Bijaykumar | Non-Collegiate Student, Roll Cal. N 8 |
| | Bandyopadhyay, Dhirendranath | Non-Collegiate Student, Roll Cal N 135 |
| | Bandyopadhyay, Durgacharan | Non-Collegiate Student, Roll Cal. N. 80, Bangabasi College. |
| | Bandyopadhyay, Harendranath | Non-Collegiate Student, Roll Cal N. 33 |
| | Bandyopadhyay, Harikumar | Non-Collegiate Student, Roll Cal N 26 |
| | Bandyopadhyay, Narayanchandra | Non-Collegiate Student, Roll Hug N 4 |
| | Bandyopadhyay, Pramathanath | Non-Collegiate Student, Roll Hug N 3 |
| | Bandyopadhyay, Sachindranath | Non-Collegiate Student, Roll Cal N 86 Bangabasi College. |
| 10 | Banik, Shorasimohan | Non-Collegiate Student, Roll Cal N 32 |
| | Bardhan, Praphullachandra | Non-Collegiate Student, Roll Bank N 2 |
| | Barman, Chandramohan | Non-Collegiate Student, Roll Coo N 4 |
| | Barman, Phanibhushan | Scottish Churches College |
| | Basu, Kalachand | Non-Collegiate Student, Roll Cal N 132 |
| | Basu, Khagendranath | Non-Collegiate Student, Roll Cal. N. 25 |
| | Basu, Sailendranath | Daulatpur Hindu Academy |
| | Bhattacharyya, Debendrakumar | Non-Collegiate Student, Roll Coo N 2 |
| | Bhattacharyya, Gobindachandra | City College |
| | Bhattacharyya, Himansubhushan | Non-Collegiate Student, Roll Cal N 6 |
| 20 | Bhattacharyya, Sachiranjan | Non-Collegiate Student, Roll Cal N 76 |
| | Bhattacharyya, Sudarsan | City College. |
| | Bhattacharyya, Surendrakumar | Sylhet M C College |
| | Biswas, Dhirendranath | City College |
| | Chakrabarti, Binaykrishna | Sylhet M C College |
| | Chakrabarti, Pareschandra | Non-Collegiate Student, Roll Cal. N 37 |
| | Chakrabarti, Satyasakha | Non-Collegiate Student, Roll Chi N 2, Chittagong College |
| | Chattopadhyay, Bimalchandra | Daulatpur Hindu Academy |
| | Chattopadhyay, Gangeschandra | City College |
| | Chattopadhyay, Krishnalal | Scottish Churches College |
| 30 | Chattopadhyay, Manmathanath | Non-Collegiate Student, Roll Ser N 8 |
| | Chattopadhyay, Sailendranath | Non-Collegiate Student, Roll Bank N 3 |
| | Chattoraj, Niranjan | City College |
| | Chaudhuri, Bankimchandra | Non-Collegiate Student, Roll Bank N 5 |
| | Chaudhuri, Bhupatibhushan | Non-Collegiate Student, Roll Cal N 85, Bangabasi College |
| | Damber Singh Gurung | Scottish Churches College |
| | Das, Abinaschandra | Non-Collegiate Student, Roll Cal. N 292 |
| | Das, Amritalal | Non-Collegiate Student, Roll Cal N. 16 |
| | Das, Aswinikumar | Non-Collegiate Student, Roll Ber N 4, K N College, Berhampur |
| | Das, Kshitischandra | Non-Collegiate Student, Roll Cal N 30 |
| 40 | Das, Radhikanath | K N College, Berhampur. |
| | Das, Ramanimohan | Non-Collegiate Student, Roll Mym N 5 |
| | Das, Ramkrishna | Non-Collegiate Student, Roll Cal N 84, Bangabasi College. |
| | Das, Ramaniranjan | Non-Collegiate Student, Roll Cal N 3, Chittagong College. |
| | Das, Saratchandra | Non-Collegiate Student, Roll Cal. N. 88, Bangabasi College |
| | Das, Satyacharan | Non-Collegiate Student, Roll Cal. N 7. |
| | Dasgupta, Nirmalananda | Non-Collegiate Student, Roll Rang. N. 27, Carmichael College, Rangpur |
| | Dasgupta, Sudhansubhushan | Non-Collegiate Student, Roll Cal N. 36. |
| | Datta, Aswinikumar | Daulatpur Hindu Academy |
| | Datta, Debiprasanna | Sylhet M. C College. |
| 50 | Datta, Prabhaschandra | Non-Collegiate Student, Roll Cal N. 102, Bangabasi College. |
| | De, Upendralal, I | Non-Collegiate Student, Roll Chi. N. 4, Chittagong College. |
| | De, Surathkumar | Non-Collegiate Student, Roll Cal N. 185 |
| | Deb, Kaminimohan | Sylhet M. C. College. |
| | Dhar, Jnanendranath | Non-Collegiate Student, Roll Cal N. 35 |
| | Dhupi, Raicharan | Sylhet M. C. College. |
| | Ghatak, Manibhushan | Non-Collegiate Student, Roll Cal. N. 10 |
| | Ghosh, Atulchandra | Non-Collegiate Student, Roll Kri. N. 2. |

| | | |
|---|---|---|
| | Ghosh, Bhujangabhushan | K. N. College, Berhampur |
| | Ghosh, Binaykrishna | Non-Collegiate Student, Roll Cal N 34 |
| 60 | Ghosh, Pasupati | Non-Collegiate Student, Roll Cal N 82, Bangabasi College. |
| | Ghosh, Ramendrakumar | Scottish Churches College |
| | Ghosh, Saileschandra | Non-Collegiate Student, Roll Cal N 21 |
| | Guha, Hemchandra | Non-Collegiate Student, Roll Far N 1, Rajendra College, Faridpur. |
| | Hati, Bijaychandra | Scottish Churches College |
| | Karmakar, Radhanath | City College |
| | Khan, Debendranath | Non-Collegiate Student, Roll Bank N 6 |
| | Khan, Manmathanath | Non-Collegiate Student, Roll Cal N 58 |
| | Kundu, Jnanendrachandra | Non-Collegiate Student, Roll Bank N 2 |
| | Lahiri, Kiranchandra | Scottish Churches College |
| 70 | Lala, Susilkumar | Non-Collegiate Student, Roll Bank N 3 |
| | Majumdar, Chandramohan | City College |
| | Majumdar, Surendranath | City College |
| | Mallik, Ajitkumar | Non-Collegiate Student, Roll Cal N 24 |
| | Mallik, Mahadeb | Non-Collegiate Student, Roll Cal N 1 |
| | Mandal, Jibankrishna | Non-Collegiate Student, Roll Cal N 49 |
| | Mandal, Sarojkumar | Non-Collegiate Student, Roll Cal N 48 |
| | Mandal, Satischandra | City College |
| | Mitra, Binaykumar | Non-Collegiate Student, Roll Cal N 28 |
| | Mitra, Nalinbihari | Non-Collegiate Student, Roll Cal N 136 |
| 80 | Mitra, Sachindrakumar | Non-Collegiate Student, Roll Cal N 75 |
| | Mobarakali Fokir | Non-Collegiate Student, Roll Dau N 2, Daulatpur Hindu Academy |
| | Mukhopadhyay, Ajitkumar | Non-Collegiate Student, Roll Hug N 1 |
| | Mukhopadhyay, Amarendranath | Non-Collegiate Student, Roll Cal N 144 |
| | Mukhopadhyay, Bankimchandra | Non-Collegiate Student, Roll Cal N 184 |
| | Mukhopadhyay, Jatindranath | Non-Collegiate Student, Roll Cal N 186 |
| | Mukhopadhyay, Nanigopal | Non-Collegiate Student, Roll Cal N 39 |
| | Mukhopadhyay, Makhanlal | Non-Collegiate Student, Roll Cal N 138 |
| | Mukhopadhyay, Radhasyam | K N College, Berhampur |
| | Mukhopadhyay, Rameschandra | Non-Collegiate Student, Roll Cal N 131 |
| 90 | Munsi, Saurindramohan | Non-Collegiate Student, Roll Cal N 87, Bangabasi College |
| | Nag, Praphullachandra | Sylhet M C College |
| | Sathia, Narayanprasad | City College |
| | Nawalkishore Choubey | Scottish Churches College |
| | Niyogi, Rameschandra | Non-Collegiate Student, Roll Cal N 18 |
| | Pakrasi, Lalitkumar | City College |
| | Pande, Hemantakumar | Non-Collegiate Student, Roll Bank N 1 |
| | Ray, Ajitkumar | Non-Collegiate Student, Roll Coo N 3 |
| | Ray, Balaichand | Non-Collegiate Student, Roll Cal N 142 |
| | Raychaudhuri, Amulyachandra | Non-Collegiate Student, Roll Cal N 133 |
| 100 | Saha, Ramchandra | Non-Collegiate Student, Roll Mym N 4 |
| | Samanta, Isanchandra | City College |
| | Sarkar, Bimalacharan | K N College, Berhampur |
| | Sarkar, Durgacharan | City College |
| | Sarkar, Jnanarajan | Non-Collegiate Student, Roll Ser N 7 |
| | Sen, Abinaschandra | Sylhet M C College |
| | Sen, Bansibadan | Non-Collegiate Student, Roll Ser N 2 |
| | Sen, Saileskumar | Comilla Victoria College |
| | Sengupta, Amulyakrishna | Non-Collegiate Student, Roll Cal N 110 |
| | Sengupta, Dhireschandra | Non-Collegiate Student, Roll Cal N 40 |
| 110 | Sengupta, Sudhindranath | Non-Collegiate Student Roll Cal N 17 |
| | Shailajanand Prasad Singh | Non-Collegiate Student, Roll Cal N 81, Bangabasi College |
| | Sil, Rajendralal | Non-Collegiate Student, Roll Cal N 253, City College |
| 113 | Sinharay, Prabhatkumar | Non-Collegiate Student, Roll Cal 93 |

## ARABIC

| | | |
|---|---|---|
| | Mahammad Abdul Gafur | Sylhet M. C College |
| | Mahamed Afzalali Khan | Non-Collegiate Student, Roll Cal N 127 |
| | Md. Abdul Latif | Sylhet M C College |
| | Mohammad Taiyeb Ali | Sylhet M C College |
| 5 | Saleh Ahmad Choudhury | Non-Collegiate Student, Roll N 5, Chittagong College. |

PERSIAN.

| | | |
|---|---|---|
| | Abdul Haque, II | Non-Collegiate Student, Roll Chi N. 8, Chittagong College |
| | A M Ahmed Abdul Qauyam | Non-Collegiate Student, Roll Hug N 2 |
| | Maqbul Ahamed | Non-Collegiate Student, Roll Chi. N. 6, Chittagong College |
| | Meerza Zafar Bukht | Non-Collegiate Student, Roll Cal N 12 |
| | Md. Fazlur Rahman Khan | Non-Collegiate Student, Roll Cal N 14 |
| | Oli Miyan | Non-Collegiate Student, Roll Chi. N 7, Chittagong College |
| | Onkar Pershad | Non-Collegiate Student, Roll Mid N. 5. |
| | Shaikh Abdul Hakim | Non-Collegiate Student, Roll Hug. 5 |
| 9 | Yusuf Ali Biswas | K N. College, Berhampur |

HISTORY

| | | |
|---|---|---|
| | Baksi, Nripendramohan | Non-Collegiate Student, Roll Cal N 286 |
| | Basu, Sadhanchandra | Non-Collegiate Student, Roll Cal N 55 |
| | De, Taraprasad | Non-Collegiate Student, Roll Cal. N 90, Bangabasi College |
| | Ghosh, Bhabanisaran | Non-Collegiate Student, Roll Ser N 10 |
| | Goswami, Juthibakas | Non-Collegiate Student, Roll Bank N 4 |
| | Maulik, Narayanchandra | City College |
| | Mitra, Nilambucharan | Non-Collegiate Student, Roll Cal N 57 |
| 8 | Sanyal, Bishnupada | Non-Collegiate Student, Roll Cal N 4 |

LOGIC

| | | |
|---|---|---|
| | Abdul Jalil | Non-Collegiate Student, Roll Bank N 7 |
| | Abdul Majid | Sylhet M C College |
| | Basu, Rameschandra | Non-Collegiate Student, Roll Cal N. 287 |
| | Chattopadhyay, Kalidas | Non-Collegiate Student, Roll Cal N 19 |
| | Chattopadhyay, Satyanarayan | Non-Collegiate Student, Roll Cal N 41 |
| | Datta, Ratanath | Non-Collegiate Student, Roll Cal N 204 |
| | Deb, Nirendranath | Sylhet M C College |
| | Dechaudhuri, Dhirendragumar | Sylhet M C College |
| | Gadde Veeraraghavayya | Non-Collegiate Student, Roll Cal. N 202 |
| 10 | Padlamoodi Kotayya | Non-Collegiate Student, Roll Cal N 201 |
| | Lala Ramchandra | Non-Collegiate Student, Roll Cal. N 11 |
| | Laha, Nalinchandra | Non-Collegiate Student, Roll Cal N. 200 |
| | Phukan, Lakshminath | Non-Collegiate Student, Roll Rang N 29, Carmichael College, Rangpur |
| | Saha, Kishorimohan | Non-Collegiate Student, Roll Cal. N 42 |
| | Sil, Amarendranath | Scottish Churches College |
| | Sil, Satischandra | Non-Collegiate Student, Roll Cal N 178 |
| 17 | Som, Phanindramohan | Non-Collegiate Student, Roll Cal N 91, Bangabasi College. |

ENGLISH

| | | |
|---|---|---|
| | Syed Abu Yusuf Ahmed | Non-Collegiate Student, Roll Pab. N. 1. |
| 2 | Hafiz Syed Md Mahmud | Non-Collegiate Student, Roll Cal. N 109. |

MATHEMATICS.

| | | |
|---|---|---|
| | Sengupta, Nirmalchandra | Non-Collegiate Student, Roll Cal. N 92, Bangabasi College |
| 2 | Mitra, Prabhatkumar | Non-Collegiate Student, Roll Cal. N. 302. |

PALI.

| | | |
|---|---|---|
| | Das, Nalinikanta | Non-Collegiate Student, Roll Cal. N. 46. |
| | De, Prandhan | Non-Collegiate Student, Roll Cal. N. 143 |
| 3 | Tun Aung Zan | Non-Collegiate Student, Roll Cal. N. 3. |

SANSKRIT AND HISTORY

| | | |
|---|---|---|
| | Basu, Jatindranath | Non-Collegiate Student, Roll Cal N 306 |
| 2 | Sarkar, Kisorimohan | Non-Collegiate Student, Roll Cal N 38 |

SANSKRIT AND LOGIC

| | | |
|---|---|---|
| | Ray, Manindranath | Non-Collegiate Student, Roll Com N 1 |
| 2 | Agarwala, Kedarnath | Non-Collegiate Student, Roll Cal N 20 |

ENGLISH AND ARABIC

| | | |
|---|---|---|
| | Hobibor Rohman | Non-Collegiate Student, Roll Far N 26 |

SANSKRIT AND MATHEMATICS

| | | |
|---|---|---|
| | Maitra, Bibhutibhushan | Non-Collegiate Student, Roll Cal N 79 |

*N.B.*—The asterisk prefixed to the name of a candidate indicates that he has obtained not less than three-fourths of the aggregate number of marks and the letter or letters affixed to the name of a candidate indicate that he has obtained not less than four fifths of the marks in a subject or subjects E indicates English, M indicates Mathematics, S indicates Sanskrit, A indicates Arabic, P indicates Persian, H indicates History, L indicates Logic, C indicates Chemistry, B indicates Botany and V indicates Vernacular

A C BOSE, *Controller of Examinations*

SENATE HOUSE, *the 27th June 1923*

---

## CALCUTTA UNIVERSITY.

### NOTICE

It is hereby notified for general information that the following are the subjects selected for the Essays in competition for the Jubilee Research Prizes for 1925 :—

*Literary subject.*

Drama as a reflection of national life and character in Bengal

*Scientific subject*

Researches on the Mangroves of the Sunderbans with a view to their commercial exploitation as transtuffs.

The prizes will be open to all persons who have at any time been admitted to a degree in this University.

The theses for the above prizes for 1925 are to be sent privately to the undersigned not later than the 30th June 1925. Every thesis must bear a motto, but not the name of the candidate, and must be accompanied by sealed envelope bearing the same motto outside and containing inside the name and address of the candidate.

By order of the Vice-Chancellor and Syndicate,

A C BOSE, *Controller of Examinations*

SENATE HOUSE, *the 25th June 1923.*

## CALCUTTA UNIVERSITY.

### NOTIFICATION No. MIS.—N. 74.

**Orders by the Vice-Chancellor and Syndicate.**

THE following pieces from the University Selections (prose, poetry and the Bible) are prescribed to be read for the Intermediate Examinations in Arts and Science in 1925 :—

**POETICAL SELECTIONS.**

**Milton.**

1. On his being arrived to the age of 23
2. On the late Massacre in Piedmont
3. On his Blindness.
4. To Cyriac Skinner

**Grey.**

1. Elegy Written in a Country Churchyard

**Cowper.**

1 On receipt of my Mother's Picture.

**Wordsworth.**

1. Lines written in early spring
2. To the Cuckoo.
3. The Solitary Reapers
4. The Daffodils.
5. London, 1802.
6 "The World is too much with us"
7 On the Extinction of the Venetian Republic

**Moore.**

1. Pro Patria Mori.

**Byron.**

1. Sonnet on Chillon.
2. The Isles of Greece
3. Ocean.

**Shelley.**

1 The Cloud.

**Keats.**

1. "To one who has been long in city pent."
2. On first looking into Chapman's Homer.

**Newman.**

1. "Lead Kindly Light"

**Tennyson.**

1. A Dream of Fair Women.
2. Ulysses.
3. Ode on the Death of Duke of Wellington.
4. Milton.
5 Crossing the Bar.

**Doyle.**

1. The Loss of the Birkenhead.
2. The Red Thread of Honour

**Browning.**

1. Incident of the French Camp.
2. "All Service Ranks the Same with God."

**Clough.**

1. "Say not the Struggle naught availeth".

**Lowell.**

1. The vision of Sir Launfal.

**Matthew Arnold.**

1. Saint Brandan.
2. Forsaken Merman.

**Christina G. Rossetti.**

1. At Home.
2. Uphill.
3. Passing away.

**Andrew Lang.**

1. Odyssey.
2. Pen and Ink.
3. Scythe Song.
4. Man and the Ascidian.

**R. L. Stevenson.**

1. The House Beautiful.
2. Requiem.
3. Keepsake Mill

**Davidson.**

1. Piper, Play.
2. The Merchantman.

**Francis Thompson.**

1. Poet and Anchorite.
2. To a Snow-Flake.
3. The Kingdom of God
4. "Go Songs, for ended is our brief sweet play."

**Stephen Phillips.**

1. The Fireman.
2. The Revealed Madonna.

**Rupert Brooke.**

1. Dust.
2. "Blow out, you bugles, over the rich Dead"
3. "Their hearts were woven of human joys and cares"
4. "If I should die, think only this of me"

**Prose Selections.**

| | | |
|---|---|---|
| 1 | A Panorama of India ... ... ... | Pages 1-9. |
| 2 | Webster's First Bunker Hill Oration .. | " 61-89 |
| 3 | Smith's Dreamthorpe ... ... ... | " 119-137 |
| 4 | Avebury's Study of Nature ... ... ... | " 138-148 |
| 5 | Bryce's Some Hints on Reading ... ... | " 149-169 |
| 6 | Anatol France's "Our Lady's Juggler"... ... | " 170-178 |
| 7 | Allen's "Posthumous Fame" ... ... | " 179-209 |
| 8. | Pritchett's Science ... . ... | " 224-256. |
| 9 | Arthur Ruhl's "Fall of Antwerp." | |

**Bible Selections, Part III.**

| | | |
|---|---|---|
| Pages | 31-57 ... ... ... ... | (Book of Job) |
| " | 76 87 ... ... ... ... | Ditto |
| " | 90-103 ... ... ... ... | (Psalms). |
| " | 118-123 ... ... ... ... | Ditto |
| " | 132-133 ... ... .. ... | Ditto |
| " | 135-137 ... ... ... ... | Ditto |
| " | 141-144 ... ... ... ... | Ditto. |
| " | 146-148 ... ... ... ... | Ditto. |
| " | 159-162 ... ... ... .. | Ditto. |
| " | 178-190 ... ... ... ... | (Proverbs). |
| " | 191-198 ... ... ... ... | (Ecclesiastes). |

Resolved—

That the following pieces from the "Modern Thought" be prescribed to be read for the B. A. Examination in 1925 :—

| | |
|---|---|
| Hobhouse ... ... ... ... | Law and Justice. |
| Rosebury ... ... ... ... | Wallace. |
| Haldane ... ... ... ... | Dedicated Life. |
| Bryce ... ... ... ... | Mission of State Universities. |
| Asquith ... ... ... ... | Ancient Universities and the Modern World. |

J. C. CHAKRAVORTI, *Registrar (offg.)*

SENATE HOUSE, *the 30th June 1923.*

## UNIVERSITY OF CALCUTTA.

### B.A. AND B.Sc. EXAMINATIONS, 1925.

### ANTHROPOLOGY (PASS)

*Paper I.*

| | | |
|---|---|---|
| Clodd | ... | Childhood of the World. |
| Tylor | ... | Anthropology. |
| Spurell | ... | Man and his Forerunners. |
| Hartland | ... | Primitive Society. |
| *Haddon | ... | Magic and Fetishism |

*Paper II.*

| | | |
|---|---|---|
| Haddon | ... | Wanderings of Peoples. |
| Anderson | ... | The Peoples of India |

Guide to the Ethnographical Museum of Calcutta, Part II.

*Paper III.*

(Syllabus to be prescribed later.)

### ANTHROPOLOGY (HONOURS)

(In addition to the books recommended for the Pass Course.)

*Paper I.*

| | | |
|---|---|---|
| Keith | . | Ancient Types of Man |
| Haddon | ... | Races of Man |
| Huxley | ... | Man's Place in Nature |

*Paper II*

| | | |
|---|---|---|
| Major Gordon | ... | The Khasis. |

*Papers III and IV*

| | | |
|---|---|---|
| Risley | ... | The Peoples of India. |
| Iyer | ... | Cochin Tribes and Castes (Introduction). |
| Chanda | ... | Indo-Aryan Races. |
| Gupte | ... | Hindu Holidays and Ceremonials. |

*Papers V and VI*

(Syllabus to be prescribed later.)

G. N. BANERJEE, *Secretary,*
*Council of Post-Graduate Teaching in Arts, Calcutta University.*

SENATE HOUSE, *the 27th June 1923*

---

## Board of Intermediate and Secondary Education, Dacca.

### NOTIFICATION.

IT is hereby notified that Abul Kasem Fazlul Huque, Roll No. 417 and registered No. 484 (1921-22) of the Board, a candidate sent up from the Dacca Intermediate College, having been found guilty of adopting unfair means at the Intermediate Examination of the Board held in March 1923, is debarred from appearing at the Intermediate Examination of the Board in 1924.

K. I. HUQUE,
*Secretary, Board of Intermediate and Secondary Examination.*

DACCA, *the 19th June 1923.*

## NOTICE.

### The Bengal Legislative Council Election.

#### Calcutta University Constituency.

NOTICE is hereby given that the Draft Electoral Roll of the Calcutta University Constituency will be published on Wednesday, the 4th July 1923, at the office of the Registrar, Calcutta University, as Registering Authority.

All claims to be included in the abovenamed electoral roll, and objections to any names entered herein, must be made in writing not later than the 12th day of August 1923, corresponding to the 27th day of Sraban 1330 B.S., to Messrs. E. F. Oaten, M.A., LL.B., and J. M. Bottomley, B.A., the Revising Authorities for the Calcutta University Constituency, at the office of the Director of Public Instruction, Writers' Buildings, Calcutta.

When objection is made to the entry herein of the name of any person, the full particulars of that person, as entered in this roll, must be stated

J. C. CHAKRAVORTI,

*Registrar, Calcutta University (Offg.) and*
*Registering Authority, Calcutta University Constituency.*

SENATE HOUSE, *the 2nd July 1923.*

---

## EDUCATIONAL.

### Muktarship Examination.

The following is the list of candidates who have passed the Muktarship Examination held on the 11th and 12th April 1923, in Calcutta, Gauhati and Sylhet :—

| Roll No. | Name. |
|---|---|
| 3 | Biraj Mohan Bhattacharjee |
| 4 | Fani Bhushan Chakrabarti. |
| 11 | Ananta Kumar Ganguli |
| 15 | Syed Mahamed Afzal. |
| 22 | Haripada Mukherjee |
| 26 | Shamsul Huque |
| 27 | Golak Behary Misser |
| 40 | Abdul Majid. |
| 43 | Surjya Mohan Das. |
| 45 | Dinabandhu Pal. |
| 50 | Probhatranjan Das |
| 60 | Surendra Chandra Das |
| 63 | Abala Kanta De |
| 66 | Nalini Kanta Banerjee |
| 68 | Hasmat Ali |
| 69 | Anathbandhu Maitra |
| 74 | Pran Kishore Bose. |
| 85 | Ashutosh Adhikari. |
| 90 | Saroj Kumar Sarkar |
| 91 | Harendra Nath Shet |
| 92 | Ram Kanai Choudhuri |
| 95 | Md. Nurul Ahad. |
| 102 | Harulal Ghosh |
| 103 | Hemendra Nath Basu. |
| 105A | Mohadeb De |
| 111 | Khagendra Nath Mukherjee |
| 115 | Asvini Kumar Mridha. |
| 119 | Susil Kumar Ghosh |
| 120 | Rama Kanta Pal. |
| 121 | Bhutnath Bera |
| 124 | Hem Chandra Bhattacharjya. |
| 128 | Batto Krishna Hait. |
| 132 | Satyendra Narayan Dutt |
| 139 | Radha Kanta Chakrabarty? |
| 142 | Rajani Kanta Saha Majumdar |
| 145 | Jogesh Chandra Deb Talukdar |
| 146 | Sudhir Chandra Bhattacharjee |
| 153 | Srimanta Mohun Neogi. |
| 155 | Prafulla Chandra Chakrabarti. |
| 161 | Khaleque Dad Khan. |
| 165 | Prafulla Kumar Baisya |
| 173 | Mahamud Asan Ali. |
| 177 | Anukul Chandra Mukerjee |
| 185 | Brajendra Kumar De. |
| 185 | Abdul Bari |
| 188 | Fayzal Haque Beg |
| 190 | Mohamed Ali Azam |
| 194 | Chandra Kanta Das. |
| 195 | Kali Mohun Das |
| 196 | Girindra Kumar Das |
| 202 | Md. Mizanur Rahman |
| 204 | Md. Osmangani Talukdar |
| 205 | Muralidhar Biswas. |
| 211 | Mahendra Nath Dam. |
| 213 | Harendra Nath Maitra |
| 214 | Md Abdur Rahaman. |
| 215 | Namgopal Choudhury. |
| 219 | Shah Mujhar Ali |
| 225 | Khitish Chandra Maitra. |
| 230 | Srikanta Karmokar. |
| 234 | Khitish Chandra Das. |
| 235 | Tashmuddin Khan. |
| 241 | Hem Chandra Choudhuri |
| 244 | Rajani Mohun Roy. |
| 250 | Indra Sekhar Bhattacharjya |
| 252 | Md Manowar Tarapdar. |
| 254 | Abdul Wahid, |
| 263 | Krishnadhan Chakrabarti |
| 264 | Dinesh Chandra Deb. |
| 266 | Digindra Nath Dey |
| 267 | Giris Chandra De |
| 272 | Lala Ghanendra Kumar De |
| 280 | Rebati Mohun Saha |
| 281 | Belayet Hossain. |
| 282 | Abdul Khaleque |
| 283 | Nabadwip Chandra Nath. |
| 290 | Nirmal Chandra Majumdar |
| 291 | Md. Ali Asgar. |
| 294 | Nagendra Chandra Chakrabarti |
| 303 | Chintaharan Chakrabarti |
| 307 | Kalipada Chatterjee |
| 308 | Md. Abdul Huq |
| 312 | Nalini Kumar Sen Gupta |
| 313 | Provas Chandra Chatterjee. |
| 321 | Suresh Chandra Dutt. |
| 324 | Kishori Lal Basu |
| 325 | Jagat Bandhu Mukerjee. |

B. K. MUKHERJEA,

*Secretary, Committee of Legal Education, High Court*

# The Calcutta Gazette

WEDNESDAY, JULY 4, 1923


## PART II.

### *Advertisements.*

---

**IMPERIAL BANK OF INDIA.**

***Statement of the affairs of the Imperial Bank of India on the 22nd June 1923.***

| LIABILITIES | Rs | A | P |
|---|---|---|---|
| Subscribed Capital | 11,25,00,000 | 0 | 0 |
| Capital paid up | 5,62,50,000 | 0 | 0 |
| Reserve | 4,22,50,000 | 0 | 0 |
| Public Deposits | 10,23,06,000 | 0 | 0 |
| Other Deposits | 66,87,76,000 | 0 | 0 |
| Loans against securities per contra | | | |
| Contingent liabilities | | | |
| Sundries | 1,92,49,000 | 0 | 0 |
| | 88,88,31,000 | 0 | 0 |

| ASSETS | Rs | A | P. |
|---|---|---|---|
| Government Securities | 8,51,72,000 | 0 | 0 |
| Other authorized securities under the Act | 1,23,89,000 | 0 | 0 |
| Loans | 16,11,45,000 | 0 | 0 |
| Cash credits | 22,25,44,000 | 0 | 0 |
| Inland bills discounted and purchased | 5,11,29,000 | 0 | 0 |
| Foreign bills discounted and purchased | 37,80,000 | 0 | 0 |
| Bullion | .. | | |
| Dead Stock | 2,50,04,000 | 0 | 0 |
| Liability of constituents for contingent liabilities per contra | | | |
| Sundries | 75,41,000 | 0 | 0 |
| Balances with other Banks | 59,71,000 | 0 | 0 |
| | 64,72,68,000 | 0 | 0 |
| Cash | 24,15,63,000 | 0 | 0 |
| | 88,88,31,000 | 0 | 0 |

The above balance sheet includes—

Deposits in London . £ 573,400

Advances in London ... ... £ 253,500

Cash and balances at other Banks in London £ 390,900

Percentage 30 56

Bank Rate 4 per cent

R AITKEN,

W B HUNTER,

Managing Governors

(1216—1)

## LAND SALE NOTICES.

### Notification B.

NOTICE is hereby given, under sections 5 and 13, Act XI of 1859, that unless the arrears mentioned below are paid on or before the next latest date of payment, viz., the 28th June 1923, the undermentioned estates or shares of estates in the district of Midnapore will be put up for sale at the office of the Collector of that district on the 26th September, at 12 o'clock for the said arrears

When in columns 5, 7 and 9 of the following statement it is stated that only a share is to be sold, it is to be understood that a separate account is kept for that share —

| Tauzi No. | Name of mahal and pargana. | Sadar jama of whole estate | Whether the whole estate is to be sold. | If only a share is to be sold, specification of such share or shares. | Names of proprietors of property to be sold | If only a share is to be sold, the sadar jama of such share. | If the whole estate is to be sold, the arrears due from it | If only a share is to be sold, the arrears due from it | Nature and amount of demand for which to be sold. |
|---|---|---|---|---|---|---|---|---|---|
| 1 | 2 | 3 | 4 | 5 | 6 | 7 | 8 | 9 | 10 |
| | | Rs A P | | | | Rs A P | | Rs A P | |
| 923 | Pargana Kashijora, mahal Dandeswar | 1,924 4 0 (including police) | | Residuary share excluding separate account Nos 1 to 4 only. 5 as 14 gds 2 c 2 kt share of the mahal will be sold<br>All other shares than that specified will be excluded from the sale | Gouranga Prasad Bhuian and 7 others | 689 8 6 (including police) | | 307 4 2 | |
| 947 | Pargana Kashijora, mahal Gograss Patna | 1,512 2 3 (including police) | | Separate account No 1. 10 as 13 gds 1 c 1 kt share of the mahal will be sold<br>All other shares than that specified will be excluded from the sale | Mr R K Nag and 5 others | 1,008 1 6 (including police) | | 85 15 0 (January and March 1923), including police | |
| 1466 | Pargana Khandar, mahal Barh Bansbi | 19,085 0 0 | | Residuary share excluding separate account Nos 1 to 20 and 22 to 44 only<br>The following shares of the mauzas will be sold — | Nagendra Kumar Nag and 10 others | 937 2 0 | | 113 5 1 (September 1921 to March 1923) | |

| Mauza— | A | G | C | Kt | Dt |
|---|---|---|---|---|---|
| Ashapura | 0 | 4 | 1 | 2 | 1 |
| Atmaramtarh | 0 | 8 | 3 | 1 | 2 |
| Atmarambarh kismat | 0 | 17 | 3 | 0 | 1 |
| Astidangor | 0 | 17 | 3 | 0 | 1 |
| Astidangor kismat | 0 | 17 | 3 | 0 | 1 |
| Aymachuck | 0 | 6 | 0 | 1 | 1 |
| Bankabheri | 0 | 6 | 0 | 1 | 1 |
| Ballavbarh | 1 | 15 | 2 | 0 | 2 |
| Bara Chehara | 0 | 8 | 3 | 1 | 2 |
| Bagdingria Sana | 1 | 15 | 2 | 0 | 2 |
| Bagdi Palasia | 1 | 15 | 2 | 0 | 2 |
| Bagageria | 0 | 8 | 3 | 1 | 2 |
| Bagali chak | 4 | 5 | 1 | 1 | 0 |
| Baghadangor | 0 | 8 | 3 | 1 | 2 |
| Bakhrabadpatra | 0 | 17 | 3 | 0 | 1 |
| Barhbansi | 1 | 15 | 2 | 0 | 2 |
| Baruachak | 1 | 15 | 2 | 0 | 2 |
| Banapukburia | 4 | 5 | 1 | 1 | 0 |
| Bilkunna | 1 | 15 | 2 | 0 | 2 |
| Benode chak | 1 | 5 | 1 | 0 | 1 |
| Bishnu Pandit | 8 | 3 | 1 | 0 | 2 |
| Brindaban chak kismat | 0 | 1 | 15 | 2 | 2 |
| Bharat chak | 0 | 8 | 3 | 1 | 2 |
| Bhim chak | 3 | 0 | 0 | 0 | 0 |
| Bhojraj chak | 0 | 4 | 1 | 2 | 1 |
| Chaturbhuj chak | 0 | 8 | 3 | 1 | 2 |
| Chandagobra kismat | 0 | 8 | 3 | 1 | 2 |
| Chand kuri | 0 | 4 | 1 | 2 | 1 |
| Chapsahara | 0 | 4 | 1 | 2 | 1 |
| Chenga | 0 | 17 | 3 | 0 | 1 |
| Dahanandan chak | 0 | 8 | 3 | 1 | 2 |
| Darhra | 0 | 4 | 1 | 2 | 1 |
| Darara chak kismat | 0 | 4 | 1 | 2 | 1 |
| Dwaripatna | 0 | 17 | 3 | 0 | 1 |
| Dantorda chak | 0 | 4 | 1 | 2 | 1 |
| Duria | 0 | 11 | 1 | 0 | 0 |
| Duria chak | 0 | 17 | 3 | 0 | 1 |
| Eral chak | 1 | 5 | 1 | 0 | 1 |
| Eral Dakshin | 0 | 17 | 3 | 0 | 1 |
| Eral kismat | 1 | [illegible] | 1 | 0 | 1 |
| Eral Uttar | 1 | 5 | 1 | 0 | 1 |
| Fazil chak | 0 | 4 | | 2 | 1 |
| Gangadasbarh kismat | 0 | 17 | 3 | 0 | 1 |
| Gangadas chak | 0 | 4 | 1 | 2 | 1 |
| Ganak chak | 0 | 17 | 3 | 0 | 1 |
| Gumoriabheri | 0 | 6 | 0 | 1 | 1 |
| Gomunda chak | 0 | 6 | 0 | 1 | 1 |
| Gopal chak | 0 | 4 | 1 | 2 | 1 |
| Haribarh | 0 | 17 | 3 | 0 | 1 |
| Harinath chak | 0 | 8 | 3 | 1 | 2 |
| Hariram | 0 | 17 | 3 | 0 | 1 |
| Hariram chak | 0 | 17 | 3 | 0 | 1 |
| Hatpatna | 1 | 15 | 2 | 0 | 2 |
| Hosenpur | 0 | 17 | 3 | 0 | 1 |
| Jal chak | 0 | 8 | 3 | 1 | 2 |
| Jadu chak | 0 | 17 | 3 | 0 | 1 |
| Jamini chak | 0 | 17 | 3 | 0 | 1 |
| Jugalbarh kismat | 0 | 17 | 3 | 0 | 1 |
| Juned chak | 0 | 17 | 3 | 0 | 1 |

| Tauzi No. | Name of mahal and pargana. | Sadar jama of whole estate. | Whether the whole estate is to be sold. | If only a share is to be sold, specification of such share or shares. | Names of proprietors of property to be sold | If only a share is to be sold, the sadar jama of such share. | If the whole estate is to be sold, the arrears due from it | If only a share is to be sold, the arrears due from it | Nature and amount of demand for which to be sold. |
|---|---|---|---|---|---|---|---|---|---|
| 1 | 2 | 3 | 4 | 5 | 6 | 7 | 8 | 9 | 10 |
| | | Rs A P | | A G. C Kt. Dt<br>Mauza— | | | | | |
| 1466 | Pargana Khandar, mahal Barh Ban-bi | 19,085 0 0 | | Jotbori chak 0 4 1 2 1<br>Kalang Kalbara 3 0 0 0 0<br>Kalagachhia chak 1 15 2 0 2<br>Kanchanpur 1 15 2 0 2<br>Kapasgeria 1 15 2 0 2<br>Kapasgeria kismat 1 15 2 0 2<br>Kusla chak 0 4 1 2 1<br>Kaidana 0 4 1 2 1<br>Kolanda 1 15 2 0 2<br>Krishnagerra 1 15 2 0 2<br>Kharika 0 4 1 2 1<br>Kharikabarh 0 17 3 0 1<br>Kharika chak 0 4 1 2 1<br>Khandarbhe i 0 6 0 1 1<br>Kharan chak 0 4 1 2 1<br>Lal chak 0 4 1 2 1<br>Lawdangra 0 17 3 0 1<br>Luahat 1 15 2 0 2<br>Mubarak chak 1 15 2 0 2<br>Madhubon chak 0 17 3 0 1<br>Mahabat chak 0 17 3 0 1<br>Mahammad Kasim chak 1 15 2 0 2<br>Mazafor chak 0 4 1 2 1<br>Mangalpur 0 17 3 0 1<br>Manohar chak 1 15 2 0 2<br>Masagan 0 17 3 0 1<br>Modimhari chak 0 17 3 0 1<br>Madhabpur 0 17 3 0 1<br>Mahammad Ali chak 0 4 1 2 1<br>Malpari 0 8 3 1 2<br>Malpari chak 0 8 3 1 2<br>Malikara 0 4 1 2 1<br>Mamudpur 0 17 3 0 1<br>Mamudabaz 0 17 3 0 1<br>Mangial 1 15 2 0 2<br>Musa chak 1 5 2 0 1<br>Matkadpur 0 17 3 0 1<br>Matkadpur kismat 0 17 3 0 1<br>Mirza chak 0 17 3 0 1<br>Nayan chak 0 8 3 1 2<br>Nar 0 4 1 2 1<br>Nibra 1 15 2 0 2<br>Nibra chak 1 15 2 0 2<br>Nurmuhammad chak 1 15 2 0 2<br>Nun kismat 1 15 2 0 2<br>Nidhua 0 8 3 1 2<br>Nidhua kismat 0 8 3 1 2<br>Nidhua chak 0 8 3 1 2<br>Paramanandachak kismat 0 8 3 1 2<br>Paschimgeria 1 15 2 0 2<br>Pathra chak 0 17 3 0 1<br>Patna chak 0 6 0 1 1<br>Pindragerla 1 15 2 0 2<br>Pithapur 1 15 2 0 2<br>Pithapurbarh 1 15 2 0 2<br>Pithapura chak 1 15 2 0 2<br>Porbageria 1 15 2 0 2<br>Putrangi 0 17 3 0 1<br>Prasadbarh kismat 3 0 0 0 0<br>Pratappur 0 17 3 0 1<br>Ratanchack kismat 3 0 0 0 0<br>Rampal chak .. 1 15 2 0 2<br>Ditto 1 15 2 0 2<br>Salad Bibi chak 1 15 2 0 2<br>Safachar chak 1 15 2 0 2<br>Safichak 1 15 2 0 2<br>Sarfaraz chak 3 0 0 0 0<br>Saluka kismat 0 4 1 2 1<br>Sanchehara 0 8 3 1 2<br>Sanneshara 0 4 1 2 1<br>Sahneanpur 0 17 3 0 1<br>Sarangachak 0 17 3 0 1<br>Satsai 0 17 3 0 1<br>Sikharchak 0 17 3 0 1<br>Subhadra chak 0 17 3 0 1<br>Sujanagor 0 17 3 0 1<br>Sankar kismat 0 4 1 2 1<br>Sauka Dakshin 0 17 3 0 1<br>Shyamsubulan chak 1 15 2 0 2<br>Taladiha 0 6 0 1 1<br>Takhi chak 0 4 1 2 1<br>Teghari Jamabalida 3 0 0 0 0 | | | | | |

[ILLEGIBLE], *for* Collector

Midnapore, the 17th May 1923

## Advertisement of sale.

NOTICE is hereby given that the undermentioned plots of land, no longer required by Government, situated along the Baraset-Basirhat Light Railway, in the district of 24-Parganas, will be put up to sale, at 1 30 P M, on 14th August 1923, corresponding with 29th Sraban 1330 Fusli, at Basirhat Kutchery Railway Station.

The purchasers of the several plots of land will be subject to the following conditions —

*1st* —The purchasers will have no power to make any excavations on the land nearer than fifteen feet from the railway boundary, or to plough the land nearer than three feet from the same.

*2nd* —If the amount of purchase-money does not exceed Rs 100, the whole amount must be paid down at once

*3rd.* – If the amount of purchase-money exceeds Rs 100, one fourth of the amount must be immediately deposited. If the balance be not paid by noon of the fifteenth day after the sale, reckoning the day of sale as one, or if that day be a close holiday, then by noon of the first succeeding office day, the sale shall be cancelled, the sum deposited being forfeited to Government, and the lot again put up for sale at the risk of the defaulting purchaser, after issue of advertisement, as in the case of original sale

*4th* —The plots of land will be sold revenue-free to the highest bidders

*5th.*—The sale will become final on receipt by the Collector of the orders of the Commissioner confirming it, and regular conveyance will then be granted to the purchaser

| 1 | 2 | 3 | 4 | 5 | 6 | | 7 | | 8 | 9 |
|---|---|---|---|---|---|---|---|---|---|---|
| Consecutive lot No. | Name of district. | Pargana and mauza. | Number of mile on which land is situate | Situated on which side of the railway | APPROXIMATE AREA OF LOT IN BIGHAS AND IN ACRES | | LAND EXCLUDED FROM SALE FROM EACH LOT | | Commencement and termination of lot | Boundary of lot |
| | | | | | B K C | Acres and decimals | Reasons for exclusion | Acres and decimals | | |
| 1 | 24-Parganas | Saipala Ganapatipur, pargana Baija | | North side of the railway | | 6 46 | | | | *North*—By the land of Jummon Gazi, Priyanath Kapali, Basirhat School boarding land and land of Chand in Sing<br>*East*—By the land of Haripada Kapali, Chand Gazi and Tamizuddi Mondol and others<br>*South*—By the Baraset Basirhat Light Railway<br>*West*—By the land of Chandan Sing, Mukhsud Hussain, Rupendra, Nath Upadhayah and others and municipal road |

Alipore, the 15th June 1923

J H LINDSAY, Collector

## Advertisement of sale.

NOTICE is hereby given that the undermentioned plots of land, no longer required by Government, situated along the Assam Bengal Railway, in the district of Mymensingh, will be put up to sale at 12 o'clock, on the 30th August 1923.

The purchasers of the several plots of land will be subject to the following conditions —

*1st* —The purchasers will have no power to make any excavations on the land nearer than fifteen feet from the railway boundary, or to plough the land nearer than three feet from the same

*2nd* —If the amount of purchase money does not exceed Rs 100, the whole amount must be paid down at once

*3rd* —If the amount of purchase-money exceed Rs 100, one-fourth of the amount must be immediately deposited If the balance be not paid by noon of the fifteenth day after the sale, reckoning the day of sale as one, or if that day be a close holiday, then by noon of the first succeeding office day, the sale shall be cancelled, the sum deposited being forfeited to Government, and the lot again put up for sale at the risk of the defaulting purchaser, after issue of advertisement, as in the case of original sale

*4th.*—The plots of land will be sold revenue-free to the highest bidders.

*5th* —The sale will become final on receipt by the Collector of the orders of the Commissioner confirming it, and a regular conveyance will then be granted to the purchaser.

| 1 | 2 | 3 | 4 | 5 | 6 | | 7 | | 8 | 9 |
|---|---|---|---|---|---|---|---|---|---|---|
| Consecutive lot No | Name of district | Pargana and mauza | Number of mile on which land is situate. | Situated on which side of the railway | APPROXIMATE AREA OF LOT IN BIGHAS AND IN ACRES | | LAND EXCLUDED FROM SALE FROM EACH LOT | | Commencement and termination of lo | Boundary of lot |
| | | | | | B K C | Acres and decimals. | Reasons for exclusion. | Acres and decimals | | |
| 1 | Mymensingh | Pargana Mymensingh, mauza Char Iswardia | | On the northern side of Assam-Bengal railway at Jogendranagar jute siding | | 0·0689 | | | | *North*—By settlement plot No. 2107 and lands of Kangugain and Jogar Mea<br>*East*—By settlement plots Nos 2174 and 2175 and lands of Rosan Sheik and Sonai Bibi<br>*South and West*—By settlement plot No. 2108 and lands of Kutub Moral |

Mymensingh Collectorate, the 19th June 1923

D M. SEN, *for* Collector.

## The Commissioners for the Port of Calcutta.

**Notice of sale under sections 118 and 119 of the Calcutta Port Act, III of 1890 (B.C.).**

NOTICE is hereby given that the liability of the Commissioners for the undermentioned goods consigned to order ex the undermentioned vessels has, in terms of section 118 of the abovementioned Act, ceased on the expiration of three clear days from the date of landing These goods accordingly remain on the Port Commissioners' premises at the sole risk and expense of the owners, and if not cleared on or before the 18th August 1923, on payment of all charges due, will be sold by public auction

| Date of landing. | Marks and numbers. | Quantity. | Description. |
|---|---|---|---|
| | **SHED No. 7.** | | |
| | **SS. "Margha."** | | |
| 29th May 1923 ... | A T D & Co E 219 .. | 1 | Case advertising matter |
| 29th " " ... | 397 in a diamond, D D on top, S S below, 4-6 | 3 | Cases |
| 29th " " ... | =413—, 1 3 .. | 3 | Cases |
| 30th " " ... | 7550 in a diamond, D S below, 1 2 | 2 | Cases |
| 29th " " | K L G 0164A, 237 257, 2681 | 22 | Cases merchandise |
| 29th " " ... | R S A in a diamond, Lucknow below, 83 84, 2310-2317 | 9 | Cases paint |
| 31st " " | B I M S ... . ... | 1 | Case medicine |
| | **SS. "Governor."** | | |
| 5th June 1923 .. | PS 23 Cawnpore, 4 6 . . | 3 | Cases merchandise |
| 5th " " .. | S K in a diamond, D below, 9465-9466, 9485-9486, 9473, 9476 | 6 | Cases cottons |
| | **SHED No. 8.** | | |
| | **SS. "City of Rangoon."** | | |
| 7th June 1923... | B M C . ... ... | 1 | Earthenware pan |
| 28th May " ... | A diamond, E H on top, M L below, 17-18 | 2 | Cases cotton yarn |
| 28th " " .. | A diamond, R S on top, & Co below, 6-8 | 3 | Cases drugs. |
| | **SHED No. 9.** | | |
| | **SS. "Nirvana."** | | |
| 9th April 1923... | No mark . ... ... | 1 | Crate-china tiles |
| | **SS. "Egremont."** | | |
| 31st May 1923 ... | 0638 in a block, G Ld below, 6-10 ... | 5 | Cases metal buttons. |
| 6th June " ... | Stranger & Co Benares City .. ... | 1 | Cylinder hydrogen |

| Date of landing | Marks and numbers. | Quantity | Description |
|---|---|---|---|
| | **SHED No. 9**—*contd.* | | |
| | **SS. "Egremont"**—*contd* | | |
| 11th June 1923 | No mark ... ... ... | 3 | Bags wheat sweeping |
| | **SS. "Clan Macbrayne."** | | |
| 13th June 1923 | B N R in a triangle ... ... | 1 | Case whisky |
| 12th " " ... | H R-M in a diamond, 50-59 .. | 10 | Cases merchandise |
| 13th " " | I M C Lucknow 1 3 ... ... | 3 | Ditto. |
| 11th " " .. | P C G 203-47 H C A .. .. . | 50 | Cisterns |
| 16th " " ... | U A in a block, Madras below ... | 1 | Bag |
| 16th " " ... | A triangle, S on top, K H on sides, Madras below, 1212. | 1 | Bale |
| | **SHED No. 5.** | | |
| | **SS. "Warfield."** | | |
| 29th May 1923 ... | 153 in a diamond, A W on top, J C below, 80-81 | 2 | Cases merchandise |
| 29th " " ... | B & Co in a diamond .. | 4 | Cases jam |
| 29th " " ... | Becha Lall Shaw in a block .. | 9 | Ditto |
| 29th " " .. | B S Calcutta ... ... . | 16 | Ditto |
| 29th " " . | B N Shaw Calcutta in a block ... | 8 | Ditto |
| 29th " " ... | Beshewar Shaw Calcutta in a block ... .. | 9 | Ditto. |
| 30th " " ... | Bacha Shaw in a block ... | 3 | Ditto |
| 29th " " ... | Bhola in a diamond, N A on top, B & Co below | 8 | Ditto |
| 29th " " .. | B I S N Co, Ld .. ... | 1 | Bundle used gunny. |
| 29th " " ... | D N S & Co in a block ... ... | 8 | Cases jam |
| 29th " " ... | Dutt Sanat & Co .. . | 6 | Ditto |
| 29th " " ... | D N P R ... ... ... | 5 | Ditto. |
| 29th " " .. | D N Shaha & Sons in a block ... | 4 | Ditto |
| 30th " " ... | F & C, 1-25 ... ... ... | 25 | Cases Port wine (W. Godown) |
| 29th " " ... | G C Shaha & Sons in a diamond ... | 26 | Cases jam |
| 29th " " ... | G & Co in a diamond ... ... | 18 | Ditto |

| Date of landing | Marks and numbers | Quantity | Description |
|---|---|---|---|
| | **SHED No. 5**—*concld* | | |
| | **SS. "Warfield"**—*concld* | | |
| 29th May 1923 .. | G R B ... . .. | 1 | Bundle cloves |
| 29th " " . | G C S & Co in a block . ... | 1 | Case jam. |
| 29th " " . | H M .. .. .. | 16 | Cases jam |
| 29th " " ... | H W M .. ... .. | 3 | Ditto |
| 29th " " | K R S Calcutta . . . | 4 | Ditto |
| 29th " " | M E & Co .. .. . | 1 | Case jam |
| 29th " " . | M Said ... . | 6 | Cases jam |
| 29th " " .. | M S M R, Colloootolla 64 . | 1 | Case medicine |
| 7th June " ... | Nil | 1 | Tin puppy biscuits |
| 7th " " | Nil | 2 | Tins oatmeal |
| 7th " " | Nil .. | 1 | Tin cornflour |
| 5th " " . | Nil ... | ... | A quantity of broken glassware |
| 29th May " | Reading Calcutta in a block . | 3 | Cases jam |
| 29th " " | R B & M I | 28 | Cases jam |
| 4th June " | R 838 in a diamond, W S on top, 2-3 | 2 | Cases merchandise |
| 29th May " | — Ditto -, 1 .. | 1 | Bale merchandise |
| 29th " " . | Ray & Co . .. | 5 | Cases jam. |
| 29th " " . | Raja Ram & Co | 2 | Cases jam |
| 1st June " . | S 197 in a diamond, D B on top, 1 ... | 1 | Case white satin jean |
| 29th May " ... | S & Co in a diamond .. | 10 | Cases jam. |
| 29th " " | Shahi Calcutta .. ... .. | 4 | Ditto |
| 29th " " . | S S Calcutta ... ... | 12 | Ditto. |
| 29th " " .. | V H M Calcutta .. .. | 20 | Ditto |
| 29th " " . | V K A R & Co . .. .. | 8 | Ditto |
| | **SHED No. 6.** | | |
| | **SS. "Clan Macvicar."** | | |
| 8th June 1923... | 191 in a diamond, A W on top, J Co. below, 40, 41 | 2 | Casks merchandise |
| 2nd " " ... | ——291——, 61 ... ... .. | 1 | Case merchandise. |

| Date of landing | Marks and numbers | Quantity | Description |
|---|---|---|---|
| | **SHED No. 6**—*concld.* | | |
| | **SS. "Clan Macvicar"**—*concld* | | |
| 6th June 1923... | B M in a block .. ... | 81 | Bags merchandise |
| 20th " " ... | Bocoy in a diamond, J T on top | 1 | Box tin plates |
| 20th " " ... | F Madrass (other side mark SS Leigh) . | 18 | Pieces brass ingot |
| 4th " " ... | G A in a triangle, F C on top, Madras below, 8, 6 | 2 | Bales merchandise |
| 2nd " " .. | G in a diamond ... ... | 1 | Case merchandise |
| 9th " " ... | Nil .. ... .. | 1 | Piece stone |
| 7th " " .. | Nil ... . ... | 4 | Bags merchandise |
| 7th " " ... | Nil ... .. ... | 35 | Pieces rat traps |
| 2nd " " ... | R P, 5 ... ... ... | 1 | Case merchandise. |
| 2nd " " ... | S A N A .. .. | 2 | Cases cigars |
| | **SS. "Wartenfels."** | | |
| 2nd June 1923... | A H, 6295 .. .. .. | 1 | Case paper |
| 31st May " ... | B A S A in a block, Delhi, 606 608 ... | 3 | Cases merchandise |
| 31st " " . | & in a triangle, B J on top, 11224 .. | 1 | Case merchandise |
| 29th " " ... | B A S A in a block, Delhi, 609 ... | 1 | Case merchandise (H Godown) |
| 31st " " ... | E R G 422, 721-25 .. ... | 5 | Cases keys |
| 28th " " . | 1716 in a diamond, G H on top, W Co below, 180 | 1 | Case merchandise |
| 26th " " ... | J F M, 1-5 ... ... | 5 | Cases merchandise |
| 2nd " " ... | Ref 7152 in a diamond, S M on top, I C below, 20 | 1 | Case. |
| 26th May " ... | 320 in a diamond, S M on top, J C below, 1-2. | 2 | Cases paper toys |
| 30th " " .. | Sch & Co, 150 ... ... .. | 1 | Packet dies. |
| 2nd June " ... | S 2429 in a diamond, K C on top, 298 below. | 1 | Case beer |
| 2nd " " ... | U C-R A 1 ... ... ... | 1 | Case merchandise. |

| Date of landing. | Marks and numbers. | Quantity. | Description |
|---|---|---|---|
| | **SHED No. 2.** | | |
| | **SS. "Manaar."** | | |
| 4th June 1923 . | 4004/482 in a block, Belgica on top, 3-4 | 2 | Cases thread |
| 6th " " ... | F G 187 .. .. .. | 1 | Case Cinema films |
| 4th " " .. | G C D & Co in a diamond, Calcutta, 70-71 | 2 | Cases paper |
| 5th " " . | Hafiz, 1-7, 33-57 . .. | 32 | Cases merchandise |
| 4th " " .. | H C C 093 , 1 Calcutta . .. | 1 | Case merchandise |
| 4th " " . | 1406 in a triangle, J G on top, 1 10 . | 10 | Cases cottons |
| 4th " . | 1942 in a triangle, J G on top, 1-12 . | 12 | Ditto |
| 4th " " .. | 1944 in a triangle, J G on top, 1 12 | 12 | Ditto |
| 4th " " .. | K B S in a diamond, K C on top, D Co below, 1-6, 8-10, 1-5 | 14 | Cases merchandise |
| 4th " " .. | K B in a diamond, K C on top, D Co below, 7 | 1 | Case merchandis |
| 5th " " . | M & M Calcutta , 58 . | 1 | Ditto |
| 4th " " | A diamond, S V on top, T Co below, 58 | 1 | Case tobacco |
| | **SS. "Malakuta."** | | |
| 21st May 1923 .. | B L & Co, 1 . | 1 | Crate machinery parts |
| 21st " " ... | Belar in a diamond, N N . | 1 | Cask merchandise |
| 22nd " " .. | C & C Ltd A U M Ltd. Calcutta , 9905-8 ... . | 4 | Cases machinery |
| 21st " " | Darby, 3761 ... .. | 1 | Case merchandise |
| 21st " " .. | 1} 152 in a diamond, K S on top, A G below, Lucknow, 1-9 | 9 | Cases toilet soap |
| 21st " " ... | Mayohas in a triangle, 111-15 .. | 5 | Cases cotton |
| 21st " " ... | Raja Ram & Co, 27 ... ... | 1 | Case |
| 22nd " " ... | Salim Delhi N N ... ... | 43 | Cases toilet soap |
| 21st " " ... | S K in a diamond, D below, 9469 71, 9479-80 and 9484 | 6 | Cases cotton |
| 21st " " ... | S E & Co in a diamond, 1-5 ... | 5 | Cases medicine. |

| Date of landing. | Marks and numbers | Quantity | Description. |
|---|---|---|---|
| | **SHED No. 4.** | | |
| | **SS. "Malhar."** | | |
| 25th May 1923 ... | B C S M Baranagar, 862 .. | 1 | Keg paint |
| 25th ,, ,, ... | S M C, Ld, in an inverted triangle, 39... | 1 | Case surgical goods |
| 3rd ,, ,, .. | S E in a diamond, S A below, 1632-34 . | 3 | Cases medicine |
| 3rd ,, ,, ... | S H L in a diamond, H C on top, 100 . | 1 | Bale merchandise |
| 3rd ,, ,, | S M C, Ld, in an inverted triangle, Orissa on side, 37 | 1 | Case merchandise |
| | **SHED No. 6.** | | |
| | **SS. "City of Naples."** | | |
| 12th June 1923 .. | 218 in a diamond, A W on top, J Co below, 1-4 | 4 | Cases merchandise |
| 13th ,, ,, ... | — 220 = , 1 12 .. | 12 | Ditto |
| 12th ,, ,, . | G K O A C, 12800, 12746 8, 12438/12444, 12736/12743 | 19 | Ditto |
| 12th ,, ,, ... | G K O A C in a block, 12801 ... . | 1 | Case merchandise |
| 11th ,, ,, .. | H D D 7845 in a block, 1 6 ... .. | 2 | Cases motor car accessories |
| 11th ,, ,, | Hafiz, 867-891 .. ... | 25 | Cases Quaker Oats |
| 11th ,, ,, .. | 1637 in a diamond, I S on top, I L below, 3 | 1 | Case merchandise |
| 11th ,, ,, | Shaw Wallace . .. | 1 | Bundle samples |
| | **SHED No. 5 (A. Ghat).** | | |
| | **SS. "Trewellard."** | | |
| 17th May 1923 .. | III Red at each end<br>III Yellow in middle .. | 211 | Pieces flat bars |
| | **SHED No. 2.** | | |
| | **SS. "Mannar."** | | |
| 5th June 1923 ... | G C D & Co. in a diamond ... | 8 | Bales paper. |

| Date of landing. | Marks and numbers. | Quantity. | Description |
|---|---|---|---|
| | **SHED No. 5 (A. Ghat).** | | |
| | **SS. "Warfield."** | | |
| 5th June 1923 | D & Co in a diamond ... | 10 | Bales paper |
| | **SHED No. 8 (M. S.).** | | |
| | **SS. "Bessemer City."** | | |
| 24th May 1923 .. | 237 in a block, Angus on top | 1 | Case machinery |
| | **SHED No. 9 (M. S).** | | |
| | **SS. "Makalla."** | | |
| 29th May 1923 | S K G ... .. | 2 | Cases machinery |
| | **SHED No. 9 (A. Ghat).** | | |
| | **SS. "Halo Crates."** | | |
| 14th May 1923 .. | Nil ... .. . | 1 | Piece round bar |

H H HUDSON, Traffic Manager (*offg*)

Port Commissioners' Office, Calcutta, the 4th July 1923 (1232—1)

**List of unclaimed documents of the Calcutta Registry Office for the year 1920 for destruction under section 85 of Act XVI of 1908.**

| Serial No. | Names of parties: Claimant | Names of parties: Executant | Nature of document | Number of document in Register. | Book | Volume. | Pages. | Date of— Completion of registration | Date of— Refusal |
|---|---|---|---|---|---|---|---|---|---|
| | | | | | | | | 1920 | |
| 1 | Bengal Loan Company, Ld | Narendra Nath Bhattacherjee | Mortgage | 56 | I | 3 | 22-26 | 8th Jan | |
| 2 | Bholaram Moosaddee and another | Gora Chand Mullick and others | T Lease | 159 | I | 8 | 31-36 | 13th ,, | |
| 3 | Jamna Das Mandra and another | Maharaj Kumar Dharendra Krishna Deb | Do | 212 | I | 33 | 40-47 | 14th ,, | |
| 4 | Amtoolfabai | Asghabbhai Alibhai | Settlement | 251 | I | 26 | 89-97 | 17th ,, | |
| 5 | Narendra Nath Chatterjee | Hari Charan Dey Sarkar | Release | 701 | I | 26 | 96-103 | 20th ,, | |
| 6 | Kasar Mirza | Mahmuda Dai | Agreement | 96 | IV | 5 | 33 34 | 20th ,, | |
| 7 | Panchoo Das Bose | A K Co, Ltd, and others | Security Bond | 109 | IV | 6 | 36-37 | 21st , | |
| 8 | Ram Sundar Misser | Sm Lakhpati Thakurani | T Lease | 418 | I | 46 | 13-15 | 27th ,, | |
| 9 | Ram Prosad Sonee and another | Satish Chandra De and others | Indemnity Bond | 657 | I | 11 | 127-130 | 7th Feb | |
| 10 | Ghurnoo Narain Barma | Hari Ahir | Sale | 242 | IV | 6 | 46-47 | 9th ,, | |
| 11 | Seth Raghunath Prosad Poddar and others | Hari Ram Didwania | Mortgage | 735 | I | 36 | 139-147 | 12th , | |
| 12 | | Abdul Karim | Declaration of Trade mark | 318 | IV | 7 | 98-99 | 20th , | |
| 13 | Aga Hashar Kashmiri | Bungsidhar Khetry | Reconveyance | 349 | IV | 8 | 92 97 | 24th ,, | |
| 14 | Abdulla Mullick and another | Nalin Chandra Dey | T Lease | 1114 | I | 29 | 178-180 | 26th ,, | |
| 15 | Abdul Hamid Aymadar | Syed Sakayet Hossain | Sale | 305 | IV | 6 | 71-72 | 27th ,, | |
| 16 | Dr O W Maine and another | Mahmood Jewah Mamoojee | T Lease | 1211 | I | 57 | 245 254 | 2nd Mar | |
| 17 | Apurba Kristo Mitter and another | Mahendra Narayan Banerjee and others. | Partnership | 378 | IV | 4 | 141-147 | 2nd ,, | |
| 18 | Deb Jiban Banerjee and another | Jatindra Nath Ghose | Ditto | 455 | IV | 1 | 264 272 | 11th ,, | |
| 19 | Nazir Ahemed and another | Abdul Sattar and another | Agreement | 456 | IV | 6 | 124-126 | 12th , | |
| 20 | Jatish Chandra Pal Chowdry | Rakhal Chandra Shau Mandal | Sale | 1510 | I | 27 | 156-159 | 17th , | |
| 21 | Jatish Chandra Pal Chowdry | Gaur Chandra Mandal | Transfer of mortgage | 1511 | I | 27 | 160 163 | 17th , | |
| 22 | Nut Behari Majumdar | Ganga Churn Nag | Sale | 512 | IV | 6 | 151 152 | 23rd ,, | |
| 23 | Pandit Sunder Lal Misra | Balakiram Kahar | Lease | 1769 | I | 68 | 23 25 | 29th , | |
| 24 | Shaik Abul Fazal | Gosto Behari Dey | Mortgage | 1809 | I | 52 | 233-242 | 31st ,, | |
| 25 | Pabitra Chandra Singha | Kalyan Chandra Sinha | Sale | 1811 | I | 15 | 288-291 | 7th Apl | |
| 26 | Hara Gobinda Malakar and others | Krishna Behari Gangopadhya | Release | 1902 | I | 77 | 39-41 | 9th ,, | |
| 27 | Bal Kissen Lakshani | Pabitra Chandra Singha | Sale | 2063 | I | 84 | 1 25 | 20th ,, | |
| 28 | Shaikh Imabuddin | Shaik Makdum Baksh and another | Do | 2185 | I | 92 | 30-33 | 22nd , | |
| 29 | Purnendu Narain Singha | Satish Chandra Ghatak | Do | 2179 | I | 68 | 186 193 | 23rd , | |
| 30 | Hari Dhone Dutt | Narasinga Das Agarwala | T Lease | 2254 | I | 68 | 174 176 | 24th , | |
| 31 | Shamsunnessa Bibi and others | Shaik Sammon | Do | 2295 | I | 90 | 35-39 | 27th , | |
| 32 | Hira Lal Mandal | Upendra Nath Sadhukhan | Agreement | 781 | IV | 6 | 194 195 | 12th May | |
| 33 | | Nagendra Nath Shaw | Declaration of Trade mark | 814 | IV | 12 | 98 99 | 15th ,, | |
| 34 | Narang Ray and another | Bepin Chandra Sadhukhan | Sale | 2627 | I | 91 | 119-121 | 17th , | |
| 35 | Sushil Kumar Basu and another | Asim Chandra Ghose | Do. | 826 | IV | 7 | 199-202 | 17th , | |
| 36 | | Jnan Chandra Dutta Roy | Declaration of Trade mark. | 887 | IV | 7 | 217 218 | 26th ,, | |
| 37 | | Baidya Nath Byack | Ditto | 1075 | IV | 17 | 4 5 | 28th June | |
| 38 | Ramendra Nath Mitra | Natabar Dey and others | Mortgage | 3215 | I | 115 | 26 29 | 29th ,, | |
| 39 | Annada Bala Dasi | Satya Churn Karmakar | T. Lease | 3448 | I | 88 | 214 216 | 10th July | |
| 40 | Sitaram Saha and another | Shaik Setab Ali | Mortgage | 3443 | I | 101 | 279-280 | 12th , | |
| 41 | Debendra Krishna Ghose | Abinash Chandra Ghosal | Release | 3482 | I | 81 | 291 292 | 12th ,, | |
| 42 | Shaik Mansoor Ali | Tabbar Khan | Sale | 3516 | I | 125 | 11-14 | 14th ,, | |
| 43 | Patcobi Bibi | Shaik Abdul Rahman | Do | 3683 | I | 126 | 27-28 | 21st ,, | |

| Serial No | Names of parties. Claimant. | Executant. | Nature of document. | Number of document in register | Book | Volume | Pages | Dates of— Completion of registration | Refusal |
|---|---|---|---|---|---|---|---|---|---|
| 44 | Anukul Chandra Mookerjee | Sachidra Nath Mookerjee | Gift | 3701 | I | 106 | 226-231 | 1920 23rd July | |
| 45 | Suren Chand Dutt | Surendra Nath Halder and another | Reconveyance | 3761 | I | 131 | 54 60 | 27th ,, | |
| 46 | Chuni Lal Bakhit | Gokul Chandra Chandra | Release | 3800 | I | 109 | 233 235 | 27th ,, | |
| 47 | Notwar Lall Acharat Lall Nanawati and others | Elias Emmanuel Moses Jacob | T. Lease | 3857 | I | 128 | 124-128 | 30th ,, | |
| 48 | | Mohamed Ahsan | Declaration of Trade mark. | 1292 | IV | 16 | 108 109 | 31st ,, | |
| 49 | Sew Prasad Benia | Baludin Kalwar | Release | 1299 | IV | 16 | 110-111 | 2nd Aug | |
| 50 | Yousf Haju Ahamad | Franklin Marston Leslie and others | T Lease | 3931 | I | 127 | 146-151 | 4th ,, | |
| 51 | Jatindra Nath Biswas | Juscuru Said and another | Reconveyance | 3917 | I | 115 | 235 243 | 5th ,, | |
| 52 | Prasad Chandra Raj | Manindra Nath Dhara | Sale | 1382 | IV | 18 | 123 125 | 14th ,, | |
| 53 | Hakimam Hamadey Abdul Khaleq. | Abdul Rashid | Do | 4136 | I | 106 | 250-252 | 17th ,, | |
| 54 | Jyotish Chandra Ray | Sm Indra Mati Debi | Do | 4163 | I | 105 | 298 300 | 18th ,, | |
| 55 | Bata Krishna Dey and another | Sm Kshirodesrani Dassi and another | T Lease | 4152 | I | 125 | 144-146 | 19th ,, | |
| 56 | Hari Das Nundy and another | Hajee Kassim Haje Ebrahim Salohjee and another | Ditto | 4310 | I | 112 | 292 296 | 19th ,, | |
| 57 | Shaikh Anwar Ali | Shaikh Afsuddin Mullick | Release | 1409 | IV | 16 | 150 151 | 19th ,, | |
| 58 | Bibhuti Bhusan Chatterjee and another | Manesh Chandra Das Gupta | Partnership | 1536 | IV | 21 | 16 25 | 8th Sept | |
| 59 | Surendra Nath Chakrabarti and another. | Shaikh Manjoor Ali Sircar and another. | Sale | 1513 | IV | 18 | 192 195 | 13th ,, | |
| 60 | Asmat Ali Mullick and another | Laukhi & Co | T. Lease | 4614 | I | 151 | 61 63 | 14th | |
| 61 | Bhabani Churn Bandopadhya | Sm Naresh Nandini Dasi | Release | 4690 | I | 137 | 183 184 | 15th ,, | |
| 62 | Memana Bibi Bewa | Ujiran Bibi Bewa | Sale | 4711 | I | 125 | 218 220 | 18th ,, | |
| 63 | Dwijendra Nath Dhar | Joge Prakash Brambachari | Settlement | 4815 | I | 138 | 248 251 | 28th ,, | |
| 64 | Haji Moab Mahmod and others | Faziddin and others | Deed of Rectification | 4991 | I | 170 | 1 7 | 5th Oct | |
| 65 | Debendra Nath Sadhookhan | Bhupendra Krishna Ghosh | T. Lease | 5079 | I | 157 | 161 165 | 8th ,, | |
| 66 | Abhoy Churn Gangopadhya | Abinash Chandra Sircar | Sale | 1713 | IV | 17 | 237 239 | 12th ,, | |
| 67 | Purnanunda Singha | Lachmi Narain Shroff | T Lease | 5162 | I | 178 | 2[illegible]-35 | 16th ,, | |
| 68 | Muhammad Ali and another | Shaik Fyad Bux and another | Partnership | 1732 | IV | 20 | 221 223 | 16th ,, | |
| 69 | | Gopal Chandra Dutta | Declaration of trade mark | 1734 | IV | 17 | 251 252 | 16th ,, | |
| 70 | Shaikh Mahammad Safi and another | Musamat Khatija Bibi | Sale | 5572 | I | 146 | 265 270 | 8th Nov | |
| 71 | | Ram Ratan Mimani | Declaration of Trade mark | 1857 | IV | 19 | 268-296 | 23th ,, | |
| 72 | Fakir Mahammad and another | Bashran Bibi | Sale | 6143 | I | 191 | 18-21 | 21st Dec | |
| 73 | | Mahamad Ahamad Dadobhoy | Declaration of Trade mark | 2538 | IV | 28 | 41 42 | 21st ,, | |
| 74 | Shaikh Seidoo Miah and another | Naran Chandra Baldas | Partnership | 2065 | IV | 24 | 298 299 | 28th ,, | |
| 75 | A. E. Garch and another | Jal F karani and another | T Lease | 2 R. | II | | | | 1920 31st March |
| 76 | Shaikh Basir Ali | Narayan Hasan Sen, I S O, and another | Reconveyance | 7 S R | II | | | | 10th April |
| 77 | Sarat Chandra Mookerjee | Anango Mohun Pal | Ditto | 8 S. R. | II | | | | 11th ,, |
| 78 | Ajoy Nath Mitter | Biresur Mookerjee | Mortgage | 9 S. R | II | | | | 12th ,, |
| 79 | Manibendra Kissen Mitter | A. A. E. Sadka | T Lease | 3 R | II | — | | | 4th May |
| 80 | Hari Das Daw | Kiran kumar Dutt and another | Surrender of Lease. | 12 S R | II | | | | 28th April |
| 81 | Panna Lal Shaw and another | Shaikh Mohammed Ibrahim and another | T. Lease | 14 S R | II | | | | 6th May |
| 82 | Messrs. J G. Bagram & Co and another | T M. Anscough and another | Ditto | 10 R | II | | | | 4th Sept |
| 83 | Ram Behari Shaha | Dasarathi Sinha | Agreement | 37 S. R | II | | | | 18th ,, |
| 84 | Gobhav Lal Magan Lal Parikh | Dasarath Lal Gordhondas Bhat | Mortgage | 32 S R | II | | | | 5th Nov |
| 85 | Bijay Lal Seal and another | Central Hydraulic Press Co, Ld | T. Lease | 34 S R | II | | | | 12th ,, |
| 86 | Bhut Nath Pal and others | Hari Das Daw ,, | Ditto | 13 R | II | | | | 3rd Dec |
| 87 | Land Acquisition Collector of Chittagong. | Gooran Ali *alias* Ichuf Ali Mistri | Indemnity Bond | 1000 | IV | 5 | 287 289 | 14th June | |

CALCUTTA REGISTRATION OFFICE,
*The 19th June 1923.*

P. C. CHATTERJI,
*District Registrar of Assurances, Calcutta.*

## In the Fourth Court of the Subordinate Judge at Alipore, district 24-Parganas.

(TITLE MORTGAGE EXECUTION CASE No. 55 OF 1921.)

Ramanath Banerjee and another, decree-holders,

*versus*

Debnandan Mukerjee, judgment debtor, 150-1A, Harish Mukerjee Road

TO be sold by public auction by the Nazir of the District Judge of 24-Parganas at 12 o'clock on the 9th July 1923 for realisation of Rs 1,27,543 the following mortgaged properties on the right title and interest of the judgment-debtor therein

DISTRICT MIDNAPORE

1 All that zamindari mahal mauza Antala forming tauzi No. 1162-74 of the Collectorate of Midnapore, thana Debra, sub registry Debra, district registry Midnapore, in the district of Midnapore, paying the yearly revenue of Rs 1,014 6 2 to the Collectorate of Midnapore

2 All that zamindari mahal mauza Birshapur forming tauzi No 1175 134 of the Collectorate of Midnapore, thana and sub registry Debra, district registry Midnapore, in the district of Midnapore, paying the yearly revenue of Rs 974-14 to the Collectorate of Midnapore

3 All that zamindari mahal mauza Baranaga *alias* Baruma forming tauzi No 1172-135 of the Collectorate of Midnapore, thana Debra, sub-registry Debra, district registry Midnapore, in the district of Midnapore, paying the yearly revenue of Rs 652-12 to the Collectorate of Midnapore

4 All that zamindari mahal mauza Ghalm *alias* Ghalai forming tauzi No. 1197-665 of the Collectorate of Midnapore, thana Debra, sub registry Debra, district registry Midnapore, in the district of Midnapore, paying the yearly revenue of Rs 219-13-9 to the Collectorate of Midnapore

5 All that zamindari mahal mauza Kulgaria *alias* Kulgeroy forming tauzi No 1208-850 of the Collectorate of Midnapore, thana Debra, sub registry Debra, district registry Midnapore, in the district of Midnapore, paying the the yearly revenue of Rs 853-13-3 to the Collectorate of Midnapore

6 All that zamindari mahal mauza Pasanga, tauzi No 1222-1207 of the Collectorate of Midnapore, thana Debra, sub-registry Debra, district registry Midnapore, in the district of Midnapore, paying the yearly revenue of Rs 911-4 to the Collectorate of Midnapore

7 All that zamindari mahal mauza Sudharpur forming tauzi No 1236-1408 of the Collectorate of Midnapore, thana Debra, sub registry Debra, district registry Midnapore, in the district of Midnapore, paying the yearly revenue of Rs. 201-4 to the Collectorate of Midnapore

(Approximate value of the properties in the district of Midnapore including encumbrances Rs. 16,000.)

It appears that the properties described in the above district, viz, Midnapore have been charged for payment of Rs 1,500 per annum for *sheba* of Shiba and Jagadhatri by an Arpaunama, dated the 28th November 1893, executed by Janaki Nath Mukerjee

DISTRICT MURSHIDABAD

1 All that zamindari mahal mauza Jibanpur forming tauzi No 1309-3 of the Collectorate of Murshidabad (including patni right in ½rd share thereof), thana Bhagangola, sub registry Lalbag, district registry Murshidabad in the district of Murshidabad, paying the yearly revenue of Rs 133-12 7 to the Collectorate of Murshidabad

2 All that zamindari known tarat Badhaipara (one-third share) in pargana being tauzi No 325 2 in the Collectorate of Murshidabad paying yearly Government revenue of Rs 2,671-10 3 to the said Collectorate in thana Beldanga, sub-registry Berhampur, district registry office Murshidabad, in the district Murshidabad, consisting of the following mauzahs —

Taladanga *alias* Uludanga, Brahmangram, Nij-Bubhaipara, Bahadala *alias* Birla *alias* Balora, Andulbaria, Ramchandrapur, Aloom and Gopinathpur

3 All that zamindari mahal jote Sibarambati forming tauzi No 1183-2 of the Collectorate of Murshidabad, thana Asanpur, sub registry Asanpur, district registry Murshidabad, in the district of Murshidabad, paying the yearly revenue of Rs 9 15-9 to the Collectorate of Murshidabad (one-third share)

4 All that zamindari mahal mauza Gopalpur forming tauzi No 74-2 of the Collectorate of Murshidabad, thana Bharatpur, sub registry Bharatpur, district registry Murshidabad, in the district of Murshidabad, paying the yearly revenue of Rs 376-15-9 to the Collectorate of Murshidabad

(Approximate value of the properties in district of Murshidabad including encumbrances Rs 30,000)

It appears that the properties described above and in the district of Murshidabad are charged for the pujas, etc, at Bonch under the Will of Janaki Nath Mukerji for the sum of Rs 1,400

DISTRICT NADIA

1. All that zamindari mahal mauza Lalna Itala *alias* Kanna Itala (one-third share) forming tauzi No 199-5, of the Collectorate of Nadia, thana Nakashipara, sub registry Krishnagar, district registry Nadia, in the district of Nadia, paying the yearly revenue of Rs 458-1-3 to the Collectorate of Nadia

2 All that zamindari mahal mauza Bairam *alias* Raibati (3 annas 16 gandas share) forming the tauzi No 433-6 of the Collectorate of Nadia, thana Nakashipara, sub-registry Krishnagar, district registry Nadia, in the district of Nadia, paying the yearly revenue of Rs 191 3 to the Collectorate of Nadia

3 All that zamindari mahal mauza (Betai) Jitpur forming tauzi No 416 of the Collectorate of Nadia, thana Nakashipara, sub-registry Krishnagar, district registry Nadia, in the district of Nadia, paying the yearly revenue of Rs. 191 9-2½

4 All that zamindari mahal mauza Betai Jitpur forming tauzi No 414 of the Collectorate of Nadia, in the district of Nadia, thana Nakashipara, sub-registry Krishnagar, district registry Nadia, paying the yearly revenue of Rs 11-14 to the Collectorate of Nadia

5. All that zamindari mahal mauza Betai Jitpur forming tauzi No. 1518 of the Collectorate of Nadia, thana Nakashipara, sub-registry Krishnagar, district registry Nadia, in the district of Nadia, paying yearly revenue of Rs 23-14-4¾ to the Collectorate of Nadia.

6 All that zamindari mahal mauza Andulbaria (one-third share) forming tauzi No 3302-2 of the Collectorate of Nadia, thana Nakashipara, sub-registry Krishnagar, district registry Nadia, in the district of Nadia, paying the yearly revenue of Rs 11 7 to the Collectorate of Nadia

7. All that zamindari mahal mauza Andulbaria forming tauzi No 3303-3 of the Collectorate of Nadia, thana Nakashipara, sub-registry Krishnagar, district registry Nadia, in the district of Nadia, paying the yearly revenue of Rs. 3-5-9 to the Collectorate of Nadia.

8. All that zamindari mahal mauza Pyaypur *alias* Peerpur (one anna share), Saml Alokediya Raikhanpur *alias* Rintampur (13¼ gandas), Nichandapur (one anna), Salasari *alias* Shouldmari (one anna), Arabpur (one anna), Ramnagore Kalyanpur (one anna), Scorabaria (one anna), Rauthanpur (6½ annas) and khari jote Nischandapur (one anna) and Chandigachi Hatia Makoraii also included in the said tauzi forming tauzi No 427 of the Collectorate of Nadia, thana Nakashipara, sub registry Krishnagar, district registry Nadia, in the district of Nadia, paying the yearly revenue of Rs 715-9-6 to the Collectorate of Nadia

(Approximate value of the properties situate in district of Nadia Rs 18,000. No encumbrance )

DISTRICT BIRBHUM.

1 All that zamindari mahal lot Lalbahar *alias* Shankhabad forming tauzi No 154-2 of the Collectorate of Birbhum, thana Nalhati, sub-registry Nalhati, district registry Birbhum, in the district of Birbhum, paying the yearly revenue of Rs 686-6-3 to the Collectorate of Birbhum.

2. All that zamindari mahal mauza Bidhi Chandrapur forming tauzi No 1000 304 of the Collectorate of Birbhum, thana Nalhati, sub-registry Nalhati, district registry Birbhum, in the district of Birbhum, paying the yearly revenue of Rs 304-11 4 to the Collectorate of Birbhum (5 annas 6¼ gandas share)

3. All that zamindari mahal mauza Shanagar forming tauzi No 2735 of the Collectorate of Birbhum, thana Nalhati, sub registry Nalhati, district registry Birbhum, in the district of Birbhum, paying the yearly revenue of Rs 420-13-4 to the Collectorate of Birbhum

(Approximate value of the properties of Birbhum Rs 3,000 No encumbrance )

DISTRICT BURDWAN

1. All that zamindari mahal Ayma Pogram including Bonpara, etc , forming tauzi No 1285 of the Collectorate of Burdwan, thana Aousgram, sub registry Ghuskara, district registry Burdwan, in the district of Burdwan, paying the yearly revenue of Rs 261-8 to the Collectorate of Burdwan

2 All that zamindari mahal mauzas Deot Khunda and Khaddu Chot Khanda forming tauzi Nos 153 and 214 of the Collectorate of Burdwan, thana Jamalpur, sub registry Jamalpur, district registry Burdwan, in the district of Burdwan, paying the yearly revenue of Rs 145 9-3 to the Collectorate of Burdwan

3 All that patni taluk lot Bishalakshipur held under Maharaja of Burdwan, zamindar, on payment of the fixed annual rent of Rs. 3,878-6-6 and situate in pargana and thana Jamalpore, sub-registry Jamalpore, in the district of Burdwan

(Approximate value of the properties in the district of Burdwan Rs 7,000 No encumbrance )

DISTRICT HOOGHLY

1 All that patni taluk lot Dakshinpara *alias* Elanad Bakshi held under Maharaja of Burdwan, zamindar, on payment of the fixed annual rent of Rs. 2,198-15 and situate in pargana and thana Pandua, sub-registry Pandua, in the district of Hooghly

2 All that patni taluk lot Dhola *alias* Dhamla (eight annas share) held under the Maharaja of Burdwan zamindar, on payment of the fixed annual rent of Rs 374-11 and situate in pargana and thana Khanakul, sub registry Khanakul, in the district of Hooghly

3 All that zamindari mahal lot Mamudpur *alias* Bhopur forming tauzi No 3894 of the Collectorate of Hooghly, in the district of Hooghly, thana and sub registry Pandua, paying the yearly revenue of Rs 360-7 6 to the Collectorate of Hooghly including all rent-free and izara tenures included therein

(Approximate value of the properties in the district of Hooghly Rs 7,000 No encumbrance )

DISTRICT 24 PARGANAS.

1 All that piece or parcel of rent free land containing by estimation eight bighas more or less together with the two one-storied and one two-storied brick-built messuages, tenements and dwelling houses erected and built on part thereof situate lying at and being premises Nos 27, 27-1 and 28 South Road Entally comprised in grand division IV subdivision B in the registration district of 24-Parganas sub district of Sealdah in mauza and thana Entally in Dihi Panchannagram in the district of the 24 Parganas and butted and bounded on the north by the Municipal drain, on the south by the tenanted house of Baikuntha Nath Dutt and the tenanted land of Kalidas Addy, on the east by South Road Entally and on the west by the tenanted land of Kalidas Addy or howsoever otherwise the same may be butted and bounded known described and distinguished

(Approximate value according to decree-holder Rs 40,000)

(Approximate value according to judgment debtor Rs. 3,00,000)

It appears that the mortgagor Hrishikesh Mukerjee charged the premises Nos 26, 27 and 28 South Road Entally with others for payment of Rs 600 per month as maintenance to the minor Debnandan Mukherjee and to Srimati Annapurna Debi by a Trust deed dated 29th January 1910

It further appears that the above Trust deed was revoked by revocation of Trust deed dated 21st July 1910

## In the Fourth Court of the Subordinate Judge at Alipore, district 24-Parganas.

EXECUTION CASE No 55 OF 1921

Ramanath Banerjee and another, decree holders,

*versus*

Devnandan Mukerjee, and others, judgment debtors

Valuation of the properties by the judgment-debtor Devnandan Mukerjee, minor, represented by his mother guardian Srimati Annapurna Debi and self.

All the properties situate in the districts of—

| | | Rs |
|---|---|---|
| 1 | Midnapore, with an annual debutter charge of Rs 1,500 .. .. ... | 32,000 |
| 2. | Birbhum ... ... ... ... ... ... | 5,000 |
| 3. | Murshidabad, with an annual charge of Rs 1,400 for Debshoba and other religious endowments ... ... ... ... ... ... | 35,000 |
| 4. | Nadia ... ... ... .. ... ... ... | 25,000 |
| 5. | Hooghly ... ... ... ... ... ... ... | 10,000 |
| 6 | Burdwan ... ... ... ... ... ... .. | 8,000 |
| 7. | 24-Parganas—Entally houses with a trust charge of Rs 600 per month to be paid to the judgment-debtor (minor) and his mother ... ... ... ... | 3,00,000 |
| | | 4,15,000 |

**In the Fourth Court of the Subordinate Judge at Alipore, 24-Parganas.**

EXECUTION CASE No 55 OF 1921

Ramanath Banerjee, decree-holder,

*versus*

Debnandan Mukerjee, judgment debtor

Statement of valuation on behalf of Abul Kassem Siroji, defendant No 3

1. DISTRICT MIDNAPORE

Properties—

(a) Mauza Antala
(b) " Birshapur
(c) " Barnaga.
(d) " Ghaha
(e) " Varanaga
(f) " Sridheswarpore

(Approximate valuation Rs 54,930 )

2 DISTRICT MURSHIDABAD

Properties —

(a) Jibanpore
(b) Budhaipara
(c) Sibarambati
(d) Gopalpore

(Approximate value of the properties Rs 40,000 )

3 DISTRICT NADIA

Properties—

Kulona
Baiorani
Betai
4 Betai Jetpara
5 Betai Jitpore Tauzi
6 Andul Baria.
7 Andul Baria Tauzi, 3303 3
8 *alias* Raipur, etc

(Approximate valuation being Rs 18,000.)

4 DISTRICT BIRBHUM

Properties —

1 Lalbahar
2 Budhichandrapore
3 Shanagar

(Approximate valuation Rs 9,750 )

5. DISTRICT BURDWAN

Properties—

1 Ayanapogram
2 Deot Khunda and Khanda
3 Bishalakshmipur

(Approximate valuation being Rs 15,000.)

6. DISTRICT HOOGHLY

1 Lot Dakhinpara
2 Lot Dhoola *alias* Dhamla
3. Lot Mamudpur *alias* Bhopur

(Approximate valution Rs. 40,000.)

7 DISTRICT 24-PARGANAS

Premises Nos. 26, 27, 28, South Road, Entally.
(Approximate valuation Rs 2,50,000.)

A T. PAL, Sub-Judge.

Alipore, the 1st June 1923

(4083—4—1219)

SUMMONS FOR SETTLEMENT OF ISSUES

(ORDER 5, RULES 1 AND 5)

**In the Court of the Additional Subordinate Judge at Gorakhpur, district Gorakhpur, United Provinces.**

SUIT No 19 OF 1923

Misrilal and others, plaintiffs,

*versus*

Gopi Misser and others, defendants

To (1) Ramdularey, son of Lachhmi Misser, (2) Sahdeo, son of Nageshar, (3) Barmdeo, son of Kashi, all of Gorakhpur district, at present residing in Mymensingh

WHEREAS the plaintiffs have instituted a suit against you for possession of land, you are hereby summoned to appear in this Court in person or by a pleader duly instructed and able to answer all material questions relating to the suit, or who shall be accompanied by some person able to answer all such questions, on the 30th day of July 1923, at 10 o'clock in the forenoon, to answer the claim, and you are directed to produce on that day all the documents upon which you intend to rely in support of your defence

Take notice that in default of your appearance on the day before mentioned the suit will be heard and determined in your absence

Given under my hand and the seal of the Court, this 26th day of June 1923

[ILLEGIBLE], Judge

(1218—1)

---

NOTICE TO CREDITORS OF APPLICATION FOR DISCHARGE

[*Section 41 (1) of the Provincial Insolvency Act, V of 1920*]

**In the Court of the Sub-Judge, Asansol.**

INSOLVENCY CASE No. 7 OF 1922

Akshoy Kumar De, son of late Moheswar De, of Ramganj, chouki Asansol, district Burdwan, applicant

TAKE notice that the abovenamed insolvent has applied at the Court for his discharge, and that the Court has fixed the 7th day of July 1923, at 11 o'clock, for hearing the application

Dated this 22nd day of June 1923.

K N ROY, Sub-Judge.

(1188—1)

---

NOTICE TO CREDITORS OF THE DATE OF HEARING OF AN INSOLVENCY PETITION.

[*Section 12 of the Provincial Insolvency Act, V of 1920*]

**In the Court of the District Judge at Chittagong.**

INSOLVENCY APPLICATION No. 9 OF 1923.

WHEREAS Abdul Jalil, son of Abdur Samad, of Feringhebazar, police station Kotwali Sadar, district Chittagong, has applied to this Court, by a petition, dated 10th April 1923, to be declared an insolvent under the Provincial Insolvency Act, V of 1920, and your name appears in the list of creditors filed by the aforesaid debtor, this is to give notice to his creditors that the Court has fixed the 16th day of July 1923 for the hearing of the aforesaid petition and the examination of the debtor

J W NELSON, District Judge.

Chittagong, the 20th June 1923 (1206—1)

**In the Court of the District Judge of Hooghly.**

INSOLVENCY PETITION No 46 OF 1922

NOTICE is hereby given that Becharam De, son of late Chunilal De, of Serampore, thana Serampore, district Hooghly, was on the 21st day of April 1923 adjudged an insolvent The 7th July 1923 has been fixed for framing a schedule and creditors are required to prove their claims on that day

H C LIDDELL, District Judge

Chinsura, the 14th June 1923 (1152—1—1274)

---

**In the Court of the District Judge of Hooghly.**

NOTICE is hereby given, under clause (2) of section 12 of the Provincial Insolvency Act V of 1920 to his creditors that the insolvency petition of Monindra Nath De, son of late Bistoo Charan De, of Simlagarh, thana Pandua, district Hooghly, has been admitted by this Court as No 27 of 1923 and that the 7th July 1923 has been fixed for the hearing thereof

H C LIDDELL, District Judge

Chinsura, the 16th June 1923 (1154—1—1273)

---

**In the Court of the District Judge of Nadia.**

INSOLVENCY CASE No 26 OF 1923

Petitioner Akru Halder, son of late Sristidhar Halder, of Kanadanga, police station Damurhuda, district Nadia

NOTICE is hereby given, under clause (2) of section 19 of the Provincial Insolvency Act, V of 1920, to his creditors that the abovenamed petitioner has filed an insolvency petition and that 14th July 1923 has been fixed for the hearing thereof

B G CHATTERJEE, District Judge

Krishnagar, the 28th June 1923 (1217—1)

---

**In the Court of the District Judge of Pabna and Bogra.**

INSOLVENCY CASE No. 19 OF 1922

PURSUANT to a petition dated the 11th August 1922 and on the application of Guru Charan Halder, son of late Govinda Halder, of Kadami Saripur, police station Bera, district Pabna, and on examining the debtor himself, it is ordered that the said debtor is adjudicated insolvent The adjudication order was passed on 11th June 1923

G. C SEN, District Judge.

Pabna, the 20th June 1923 (1207—1)

---

**In the Court of the District Judge of Rangpur.**

INSOLVENCY CASE No 26 OF 1922

PRESENT

P K Mukherjee, Esq, District Judge.

ON the application of the insolvent Shib Charan Barman, son of late Bam Ram Barman, of Batrishhazari, police station Kaligaoj, in Rangpur, for being finally discharged, the 7th day of July 1923 has been fixed for hearing the aforesaid petition and the examination of the insolvent

P K MUKHERJEE, District Judge.

Rangpur, the 19th June 1923 (1187—1)

**In the Court of the District Judge of Rangpur.**

INSOLVENCY CASE No 8 OF 1923

PRESENT

P. K Mukherjee, Esq, District Judge

ON the application of the debtor Jayaratulla Sheikh, son of late Bhuta Sheikh, of Jamalpur, police station Gobandaganj, in Rangpur, for being adjudged an insolvent, the 20th day of July 1923 has been fixed for hearing the aforesaid petition and the examination of the debtor

P K. MUKHERJEE, District Judge.

Rangpur, the 27th June 1923 (1220—1)

---

**In the Court of the District Judge of Tippera.**

INSOLVENCY CASE No 8 OF 1923

NOTICE is hereby given under clause (2), section IXX of the Provincial Insolvency Act V of 1920, to the creditors that the insolvency petition of Bharat Chandra Saha, son of late Pokan Chandra Saha, of Majhiara, pargana Bardakhat, police station Rasullabad, district Tippera, has been admitted by this Court as No 8 of 1923 and that the 23rd July 1923 has been fixed for hearing

H C STORK, District Judge

Comilla, the 26th June 1923 (1214—1)

---

NOTICE

**In the 4th Court of the Sub-Judge of 24-Parganas.**

INSOLVENCY CASE No 71 OF 1923

Syama Charan Ghosh, of Huda, thana Basirhat, 24-Parganas, applicant

To Sibdhan Chatterji, of Bhalchita, thana Basirhat, 24-Parganas, and others, creditors

ON the 16th day of April 1923 it was ordered that the matter of the petition of the applicant be heard on the 6th day of August 1923 and that the said applicant do attend to be examined by this Court on that date

A T PAL, Sub-Judge

Alipore, the 18th June 1923

(1155—1—1266)

---

NOTICE

**In the 4th Court of the Sub-Judge of 24-Parganas.**

INSOLVENCY CASE No 87 OF 1923

Durga Charan Das, of Chetla Bridge Road, thana Alipore, 24-Parganas, applicant.

To Golambari Sarkar, of Goragacha, thana Behala, 24-parganas, and others, creditors

ON the 17th day of April 1923 it was ordered that the matter of the petition of the applicant be heard on the 6th day of August 1923 and that the said applicant do attend to be examined by this Court on that date

A. T. PAL, Sub-Judge

Alipore, the 18th June 1923.

(1156—1—1268)

NOTICE.

**In the 4th Court of the Sub-Judge of 24-Parganas.**

INSOLVENCY CASE No. 88 OF 1923.

Shaikh Sultan Mia, of Metiabruz, thana Metiabruz, 24-Parganas, applicant

To Mahammad Hassain Khan, of Metiabruz, thana Metiabruz, 24 Parganas, and others, creditors

ON the 17th day of April 1923 it was ordered that the matter of the petition of the applicant be heard on the 6th day of August 1923 and that the said applicant do attend to be examined by this Court on that date.

A T PAL, Sub-Judge

Alipore, 18th June 1923. (1157—1—1268)

---

NOTICE

**In the 4th Court of the Sub-Judge of 24-Parganas.**

INSOLVENCY CASE No 89 OF 1923

Sorifulla Kazi, of Sibnagore, thana Kakdvip, 24-Parganas, applicant

To Dewan Molla, of Sibnagore, thana Kakdvip, 24-Parganas, and others, creditors

ON the 17th day of April 1923 it was ordered that the matter of the petition of the applicant be heard on the 6th day of August 1923 and that the said applicant do attend to be examined by this Court on that date

A. T PAL, Sub-Judge

Alipore, the 18th June 1923 (1158—1—1269)

---

NOTICE

**In the 4th Court of the Sub-Judge of 24-Parganas.**

INSOLVENCY CASE No 90 OF 1923

Probodh Chandra Das, of 15 Crematorium Street, thana Beneepukur, 24 Parganas, applicant,

To Tarapada Dey, of 3, Grand Street, Calcutta, and others creditors

ON the 17th day of April 1923 it was ordered that the matter of the petition of the applicant be heard on the 6th day of August 1923 and that the said applicant do attend to be examined by this Court on that date.

A T PAL, Sub-Judge

Alipore, the 18th June 1923 (1159—1—1270)

---

NOTICE

**In the 4th Court of the Sub-Judge of 24-Parganas.**

INSOLVENCY CASE No. 91 OF 1923.

Mahammad Basir, of No. 1, Banu Hakker Lane, Ballygunj, 24-Parganas, applicant,

To Mahammad Hossain, of 4, Chamru Khansama Lane, Ballygunj, 24-Par-ganas, and others, creditors

ON the 17th day of April 1923 it was ordered that the matter of the petition of the applicant be heard on the 6th day of August 1923 and that the said applicant do attend to be examined by this Court on that date.

A. T. PAL, Sub-Judge

Alipore, the 18th June 1923 (1160—1—1271)

NOTICE.

**In the 4th Court of the Sub-Judge of 24-Parganas.**

INSOLVENCY CASE No 92 OF 1923

Madan Mohan Das, of Chetla Khaiapatti, thana Alipore 24-Parganas, applicant

To Mati Lal Shaha, of Chetla Bridge Road, thana Alipore, 24 Parganas, and others, creditors

ON the 17th day of April 1923 it was ordered that the matter of the petition of the applicant be heard on the 6th day of August 1923 and that the said applicant do attend to be examined by this Court on that date

A T PAL, Sub Judge

Alipore, the 18th June 1923 (1161—1—1272)

---

BABU BIBHUTI BHUSAN MAJUMDAR, M A, B L, Pleader, Judge's Court, Alipore, intends to be enrolled as a Vakil, High Court, Calcutta (1077—4)

---

LT BEJOY PROSAD SINGH ROY intends to be enrolled as a Vakil of the High Court, Calcutta (1123—4—1217)

---

PROVAT KUMAR SEN, B L, intends to be enrolled as a Vakil of the High Court, Calcutta (1209—4—1278)

---

SATYENDRANATH BANERJEE intends to be enrolled as a Vakil of the High Court, Calcutta (1122—4—1216)

---

WANTED candidates for admission into the Amin class of the B G Technical School Rangpur Students passing the M E or M V examinations and the annual examinations for promotion to class VII (4th class) of H E schools, above 16 years old, are qualified for admission, but preference will be given to students of higher classes of H E schools and specially passed and plucked Matriculates

There are two scholarships of Rs 10 each a month tenable for one year for the two best boys of this class Session commences from July There is a Hindu hostel attached to the school Muhammadan boys may put up at the Hare Moslem Hostel, Rangpur

Apply for rules with half anna postage stamps.

SIDDHESWAR SHAHA, Superintendent,
B G. Technical School, Rangpur

Rangpur, the 5th June 1923

---

**Government of Bengal.**

**PUBLIC HEALTH DEPARTMENT.**

**Engineering Branch.**

NOTICE

THE offices of the Chief and Executive Engineers, Public Health Department, and the Sanitary Board will be removed to No 3, Charnock Place, on Friday, the 22nd June 1923.

G. B WILLIAMS, Chief Engineer,
Public Health Department, Bengal

NOTICE.

**Imperial Bank of India.**

THE members of the local board have made the following change in the Bank's establishment —

Mr H M. Wigley to officiate as Superintendent, Government Account Department, as from the 26th June 1923, *vice* Mr. H Dancy, transferred

By order,

S A H SITWELL, Secretary & Treasurer.

Calcutta, the 28th June 1923 (1221—1)

---

**Notice.**

IT is notified for general information that the next ordinary examination of candidates for certificates of competency as Masters and Serangs of Inland Steam Vessels under Act I of 1917 will be held at the Port Office, Chittagong, on Mondays, the 16th July, 20th August and 17th September 1923, at 10 30 A M

Applications to be permitted to go up for examination for any of the above grade certificates must be made at the Port Office, Chittagong, not later than three days prior to the date of examination, the candidates producing their certificates and testimonials and paying the fees

E C WITHERS, COMMR, R I M,
Port Officer.

Chittagong, the 25th June 1923 (1215—1)

---

**The Commissioners for the Port of Calcutta.**

NOTICE is hereby given that the number of cargo boats allowed alongside any vessel at moorings in the river opposite any hatch is limited as follows —

On the outer or channel side to 6 abreast

On the inner or shore side to as many boats as can be accommodated without overlapping the line of the inner mooring buoys

The Manji of any boat infringing this order will be proceeded against under Port Rules 10 and 10A

W J GOOD, Secretary (offg)

The 20th June 1923 (1212—1)

---

**Notice.**

THE Bengal and Madras Service Family Pension Fund which is provisionally managed and assisted by Government has for its object the provision of monthly pensions for the maintenance of the widows and children of subscribers and is open, with certain exceptions, to all active and pensioned members of the Uncovenanted Service of Government (except those serving under the Government of Bombay), and to Local Fund servants earning pensions from Government Some of the special features of the fund are—(1) that widowed daughters incapable of remarriage or children labouring under such mental or bodily infirmities as incapacitate them from earning their livelihood or preclude the possibility of marriage (in case of a daughter) are admitted to its benefits, and (2) that subscribers to the Widows' and Daughters' branches are entitled to a refund of 30 per cent. of the premia paid, should the nominees predecease them after five years of admission. The second quinquennial valuation of the fund has been completed by the Actuary to the Government of India and his report discloses very favourable results For forms of application and rules of the Fund apply to the Accountant-General, Central Revenues, Imperial Secretariat Buildings, Calcutta.

## Notice.

THE services of pensioned and discharged sepoys of the Native Army required for employment in civil capacities may be obtained on application to the—

(i) Recruiting Staff Officer at the following stations —

Peshawar (Samana and Kohat from the 15th April to 15th October) for Pathans, Jhelum for Punjabi Mahomedans, Jullundar for Sikhs, Jullundar (Dharmsala from 15th April to 15th October) for Dogras, Agra for Rajputana and Central India Hindus and Mahomedans, Delhi for Jats and Hindustani Mahomedans, Lucknow for Hindustani Hindus, Poona for Mahrattas and Dekhani Mahomedans

(ii) Pension Pay Master, Madras, for Madrasis

All applications from employers should include the particulars shown below, and should be addressed to the officers referred to at the places above mentioned —

(1) Name of person or firm offering employment

(2) Nature of and place at which employment is offered

(3) Proposed pay and period for which employment offered

(4) Whether railway fare to place of employment will be paid or not

(5) Whether return railway fare will be paid in case of pensioner being discharged for no fault of his own, or after a definite period of service

(6) Class of men required, *e g*, Sikh, Pathan, Dogra, etc

## Custom House notice.

NOTICE is hereby given that if the duty interest, warehouse rent, and all charges be not paid within 10 days from the date of this notice on 3 packages of cigarettes marked G & Co *ex* SS "Author" from bonded by Messrs Glen and Company in the private warehouse No 1, Grant's Lane, the goods will be sold by public auction under the provision of the section 119 of the Sea Customs Act

G N BOWER, Collector of Customs

(1185—2)

## Lost.

A RECEIPT numbered 489, dated 9th June 1923, and granted by the Public Debt Office, Imperial Bank of India, on submission of the undermentioned P T Debenture. Notice of loss has been given to the Public Debt Office, Imperial Bank of India, and the undersigned is about to apply for surrender of the security —

| P. T. Debenture No. | Loan. | Amount. | Holder's name. |
|---|---|---|---|
| | | Rs | |
| 1972 | 4 per cent, 1909 | 500 | Santi Nath Chatterjee. |

Name of the proprietor—Santi Nath Chatterjee, c o North British and Mercantile Insurance Company, Ltd, 101 1, Clive Street, Calcutta

Residence—34, Grey Street

(1186—1—1280)

## In the matter of the Indian Companies Act, VII of 1913, and

## In the matter of the Sundarbans Trading Company, Limited (in liquidation).

NOTICE is hereby given that at a special meeting of the Directors of the Sundarbans Trading Company, Limited, held on the 9th June 1923, the following special resolution was passed :—

That the company be wound up voluntarily

GHOSAL & Co, Managing Agents

Basirhat Post Office, 24-Parganas, the 17th June 1923

(1164—1—1264)

IN THE HIGH COURT OF JUDICATURE AT FORT WILLIAM IN BENGAL

ORDINARY ORIGINAL CIVIL JURISDICTION

## In the matter of the Indian Companies Act, VII of 1913, and

## In the matter of the Pioneer Mills, Ld. (in liquidation).

THE Hon'ble Mr. Justice Greaves has, by an order dated the 18th day of June 1923, appointed Mr M. L Tarmaster, the Chartered Accountant, and Mr H. N Ghose, Bar at Law, to be the Official Liquidators of the abovenamed Company

Dated this 21st day of June 1923

K K DUTT & Co,

Attorneys for Messrs A. Balkisen & Co, one of the creditors of the abovenamed Company

10, Hastings Street, Calcutta (1182—1—1265)

## In the matter of the Indian Companies Act, 1913, and

## In the matter of the Timber Import and Export Company, Limited (in liquidation).

NOTICE is hereby given that at an extraordinary general meeting of the members of the abovenamed Company, duly convened and held at No 2, Royal Exchange Place, in the town of Calcutta, on the 15th day of June 1923, the resolution below mentioned was passed as an extraordinary resolution —

"The Company cannot by reason of its liabilities continue to carry on its business and accordingly that the Company be wound up voluntarily and that Mr A A Harvey of No 2, Royal Exchange Place, Calcutta, be and he is hereby appointed liquidator for the purposes of such winding up at a fixed remuneration of Rs 2,000"

A A HARVEY, Liquidator.

Calcutta, the 20th June 1923 (1183—1—1275)

## In the matter of the Indian Companies Act, 1913, and

## In the matter of the Timber Import and Export Company, Limited (in Liquidation).

NOTICE is hereby given, pursuant to section 209 of the Indian Companies Act, 1913, that a meeting of the creditors of the abovenamed Company will be held at No 2, Royal Exchange Place, Calcutta, on Monday, the 9th day of July 1923, at 12 o'clock noon.

Dated the 20th day of June 1923.

A. A. HARVEY, Liquidator.

(1184—1—1276)

**In the matter of the Indian Companies Act, VII of 1913, and**

**In the matter of the Pioneer Mills, Ltd. (in liquidation).**

THE creditors of the abovenamed Company are required on or before the 10th day of July 1923 to send their names and addresses and the particulars of their debts, claims and name and address of their attorney, if any, to Mr M L Tarmaster, Incorporated Accountant and Auditors, No 11, Kyd Street, Calcutta Joint Official Liquidator of the said Company, and if so required by notice in writing from the official liquidators or in person or by their attorneys to come in and prove their said debts or claims, at such time as shall be specified in such notice, or in default thereof they will be excluded from the benefit of any distribution made before such debts are proved.

Tuesday, the 17th day of July, at 11 A M, at the said office, No 11, Kyd Street, is appointed for hearing and adjudicating upon the debts and claims

Dated this 23rd day of June 1923

M L TARMASTER, F S A A, etc,

Joint Official Liquidator

(1210—1)

**In the matter of the Indian Companies Act, VII of 1913, and**

**In the matter of the Small Industries Development Company, Ltd., in liquidation.**

IN the extraordinary general meeting of the shareholders of the Small Industries Development Company, Limited, held on Tuesday, the 19th June 1923, at 5 15 P M, at 19, Radha Bazar Street, Calcutta, it is resolved that the Company should go to voluntary liquidation, Mr J C Das and Babu Sri Kali Ghosh be appointed as liquidators

Every one present voted for the resolution, one of the Managing Agents voted against it

Carried by majority

J CHAUDHURI, Chairman

(1213—1—1281)

**In the matter of the Indian Companies Act, 1913 (VII of 1913), and**

**In the matter of the Calcutta Industrial Bank, Ltd.**

NOTICE is hereby given that pursuant to the provisions of section 162 of the Indian Companies Act, 1913 (VII of 1913), an order has been made on the 7th June 1923 by the High Court of Judicature at Fort William in Bengal in its Ordinary Civil Jurisdiction for winding up the Calcutta Industrial Bank, Limited

W SLATHER HALE, Registrar of Companies under Act VII of 1913

**Descriptive Catalogue of Sanskrit Manuscripts.**

**PARTS I, II, and III of a Descriptive Catalogue** of the Sanskrit Manuscripts in the Library of the Calcutta Sanskrit College, prepared by Pandit Hrishikesh Sastri and Babu Siva Chandra Gui, M A., B.L., of that College, are offered to the public for sale The Catalogue having to be completed in 23 parts the price of each part is 12 annas a copy exclusive of postage Copies can be obtained from the Principal of the Sanskrit College, Calcutta.

**Notice.**

*The 10th June 1922* —In supersession of all previous orders on the subject, the following revised rates have been fixed for the *Calcutta Gazette* and its parts, with effect from the date of this notice This will not, however, affect the subscriptions already paid at previous rates until they have expired —

| Per annum. | For Calcutta | | For the Mufassal including postage. | |
|---|---|---|---|---|
| | Rs | A | Rs | A |
| Parts I and IA together, or any one of them ... | 6 | 0 | 10 | 0 |
| Part IB | 4 | 0 | 7 | 0 |
| Part II | 2 | 0 | 4 | 0 |
| Parts III and IV together, or any one of them . | 4 | 0 | 6 | 0 |
| Parts V and VI together, or any one of them | 4 | 0 | 6 | 0 |
| Appendix (Marine) | 1 | 0 | 3 | 0 |
| Do (Bengal Library Catalogue) | 2 | 0 | 3 | 0 |
| Supplement | 6 | 0 | 9 | 0 |
| Entire | 22 | 8 | 27 | 8 |

| Per issue | Price | | |
|---|---|---|---|
| | Rs | A | |
| Part I | 0 | 4 | Postage according to weight |
| Part IA | 0 | 2 | |
| Part IB . . | 0 | 4 | |
| Part II . | 0 | 4 | |
| Parts III and IV together, or any one of them .. . | 0 | 4 | |
| Parts V and VI together, or any one of them .. .. .. | 0 | 4 | |
| Appendix (Marine) . | 0 | 2 | |
| Do (Bengal Library Catalogue) | 0 | 8 | |
| Supplement . . . | 0 | 4 | |
| Entire (without Bengal Library Catalogue) ... ... ... ... | 0 | 12 | |

A special price will be fixed for specially heavy issues of the *Calcutta Gazette* or any particular part.

*N B* —Extraordinary issues of the *Gazette* can be obtained from the Officer in charge, Bengal Secretariat Book Depôt, at the rate of one anna for every four pages or a fraction thereof Postage according to weight.

Rates for advertisement in the *Calcutta Gazette*

| | Rs |
|---|---|
| Full page, per issue . .. . | 20 |
| Half page, per issue . . .. | 10 |

Casual advertisements, 4 annas per line per insertion

## Post Office.

### Despatch of Sea-borne Mails.

| MAILS FOR— | Day or date of closing of mails | LATEST HOURS OF POSTING AT THE G. P. O | | | |
|---|---|---|---|---|---|
| | | UNREGISTERED LETTERS AND PACKETS | | REGISTERED LETTERS AND PACKETS. | |
| | | Without late fee | With late fee.* | Without late fee. | With late fee.* |
| | | P M | P.M | P M | P M |
| United Kingdom, Europe, Aden, Egypt, East and West Africa and America ... | Thursday ... | 5-45 | 6-45 | 4-45 | 5-15 |
| Ceylon ... ... ... .. | Daily | 4 15 | 4-45 | 3 15 | 3-45 |
| Straits Settlements, French Indo-China, Federated Malay States, Philippine Islands, Netherlands-India Siam, China and Japan per SS. "Chakrata" | July 4 .. | 7-30 | 8 0 | 5-0 | 6-0 |
| Burma ... ... ... .. | " 2 . | 7-30 | 8-0 | 5-0 | 6-0 |
| Port Blair (Direct) ... ... .. | " 2 ... | 7 30 | 8-0 | 5-0 | 6-0 |
| † Mauritius, Reunion, Mayotte and Nossi-Be per SS "Chupra" from Colombo | " 3 ... | 4-15 | 4-45 | 3-15 | 3-45 |

NOTE.—The latest date and hour for booking Money Orders and Parcels for despatch by the Homeward English mail is Wednesday, 5 P M., and Thursday noon respectively.

* The late fee is 4 annas for each registered or unregistered article of the Letter Mail to any place in the countries named above except for Aden, Burma, Ceylon and Port Blair, the late fee for which is ½ anna for unregistered articles and 2 annas for registered articles. Letters are accepted with late fee only on occasions when a direct mail is closed by the Calcutta G. P. O for Foreign countries.

† When there is no direct mail from Calcutta, correspondence for South Africa and Mauritius posted up to 5-15 P M. in the Calcutta G. P. O is despatched to Bombay and correspondence for Australia, New Zealand and Japan posted up to 4 15 P M., to Colombo for transmission by the first available steamer.

Calcutta, G. P. O, the 30th June 1923.

H. M. RICHARDSON, Presidency Postmaster.

## CINCHONA FACTORY PRODUCTS.

BY order of the Government of Bengal Cinchona Factory Products will be sold by the **Superintendent, Juvenile Jail, Alipore,** at the undernoted rates from the 1st June 1923.—

### Quinine Sulphate.

| | |
|---|---|
| For 60 lbs and above in one delivery | Rs 27 per lb |
| For 6 lbs and over but less than 60 lbs in one delivery | " 28 " |
| For any quantity less than 6 lbs. | " 29 " |

### Quinine Hydrochloride.

| | |
|---|---|
| For 60 lbs and above in one delivery | Rs. 35 per lb |
| For 6 lbs and over but less than 60 lbs in one delivery | " 36 " |
| For any quantity less than 6 lbs. | " 37 " |

### Quinine Di-Hydrochloride

| | |
|---|---|
| For 60 lbs and above in one delivery | Rs 38 per lb |
| For 6 lbs and over but less than 60 lbs in one delivery | " 39 " |
| For any quantity less than 6 lbs | " 40 " |

### Cinchonidine Sulphate and Cinchonine Sulphate.

| | |
|---|---|
| For not less than 6 lbs in one delivery | Rs 12 per lb |
| For any quantity less than 6 lbs | " 13 " |

### Cinchona Febrifuge Powder.

| | |
|---|---|
| For not less than 6 lbs in one delivery | Rs 8 per lb |
| For any quantity less than 6 lbs | " 9 " |

### Cinchona Febrifuge Tablets.

| | |
|---|---|
| For not less than 6 lbs in one delivery | Rs 9 per lb. |
| For any quantity less than 6 lbs | " 10 " |

### Quinoidine Tablets.

| | |
|---|---|
| For not less than 6 lbs in one delivery | Rs 7 per lb |
| For any quantity less than 6 lbs | " 8 " |

### Quinoidine (in Mass).

| | |
|---|---|
| For not less than 6 lbs in one delivery | Rs 6 per lb |
| For any quantity less than 6 lbs | " 7 " |

### Quinidine Sulphate.

| | |
|---|---|
| For any quantity less than 6 lbs | Rs 39 per lb |

**Quinine Sulphate** is for sale to Government Institutions and Missionaries only. It is not for sale to Private Firms or the General Public

**Cinchona Febrifuge** in Powder and Tablet form (when in stock) is for sale to Government Institutions, Missionaries and the General Public

Quinine Sulphate will be supplied to Hospitals and Dispensaries of this Presidency only at the wholesale rate of Rs. 27 per lb., irrespective of quantities For all other purchasers the rates given above will apply.

*Transit charges extra in every case*

The system of payment is by—*Cash in advance*—by "*Treasury Chalans*" which should accompany the order or indent.

In cases where this is not possible, payment should be made by "*Remittance Transfer Receipts*" or crossed "*Cheques*"

Indents unaccompanied by Cash in advance will be sent Value Payable Post

In the case of *Government Officers* payments will be recovered by *Book Transfer* or *Countersigned Invoices* in the event of *Cash* not accompanying the Indent by "*Treasury Chalans*" *R T R*, or *Cheque.*

2. Price and postage must accompany the price of the drug (when the drug is required by post)

3 The name of the Railway and Steamer Station or Post-Office must be written distinctly when the parcels are required by Rail, Steamer or by Post

4. A scale of postage is given below —

For ½ lb 4 annas, ¾ lb 5 annas, 1 lb 8 annas, 1½ lbs 11 annas, 2 lbs 14 annas, 2½ lbs. Re 1-1, 3 lbs Re 1-1, 3½ lbs. Re. 1-4, 4 lbs Re 1-7, 4½ lbs. Re 1-13, 5lbs Re. 1-13, 6 lbs Rs 2.

Local sale at the Jail gate from 7 to 10 A.M., and 2 to 4 P.M

*N.B.*—Postage stamps are not accepted as revenue

**Government reserve the right to alter the price without notice.**

## NOTICE.

**Advertisements, Notices, etc., intended for insertion in this Part of the Gazette cannot be received after noon on Saturday.**

**REGISTERED No. C207.** **No. 27 of 1923.**

# The Calcutta Gazette

WEDNESDAY, JULY 4, 1923

## SUPPLEMENT.

### *Official Papers.*

[*Non Subscribers to the* GAZETTE *may receive* SUPPLEMENT *separately on payment of five rupees per annum if delivered in Calcutta, or seven rupees and eight annas if sent by post.*]

CONTENTS


| | Page | | Page. |
|---|---|---|---|
| Approximate return of traffic on the Circular and Eastern Canals for the week ending Saturday, the 23rd June 1923 | 795 | Vital Statistics of the Towns of Bengal for the week ending 23rd June 1923 | 817 |
| Statement showing the daily gauge readings of certain rivers for the week ending 28th June 1923 | 800—806 | Daily rainfall recorded in Bengal for the month of May 1923 | 818—823 |
| Weather and Crop Report for the week ending on the 27th June 1923 | 807—810 | Statement showing heights over mean sea-level and low water in the rivers for the month of March 1923 | 824—825 |
| Prices-current (wholesale and retail) of food grains and salt, etc., in the districts of Bengal for the first half of June 1923 | 811—816 | Area leased for irrigation up to end of May 1923 | 826 |
| | | Statement of weekly gauge-readings on the rivers in Bengal | 827—828 |


## GOVERNMENT OF BENGAL, IRRIGATION DEPARTMENT.

***Approximate return of traffic on the Circular and Eastern Canals for the week ending Saturday, the 23rd June 1923, as compared with the corresponding week of the previous year.***

| Nature of cargo | Week ending Saturday, the 23rd June 1923. | | | Week ending Saturday, the 24th June 1922 | | |
|---|---|---|---|---|---|---|
| | Number of boats. | Weight of cargo | Tollage | Number of boats | Weight of cargo. | Tollage. |
| | | Mds | Rs | | Mds | Rs |
| Rice and paddy ... ... | 249 | 48,475 | 725 | 163 | 42,590 | 609 |
| Jute ... ... ... | 54 | 53,868* | 487 | 23 | 20,575† | 165 |
| Firewood ... ... | 51 | 30,245 | 460 | 30 | 16,125 | 234 |
| Other articles ... ... | 1,024 | 321,265 | 3,310 | 647 | 175,435 | 1,897 |
| Total ... | 1,378 | 453,853 | 4,982 | 863 | 254,725 | 2,905 |
| Empty boats and rafts ... | 327 | ... | 1,196 | 298 | ... | 1,025 |
| GRAND TOTAL ... | 1,705 | 453,853 | 6,178 | 1,161 | 254,725 | 3,930 |

| | Mds. |
|---|---|
| * Weight by canal measurement | 65,037½ |
| † Ditto ditto .. . | 21,850 |

T. C. BHATTACHARYA,
*Assistant Secretary to the Government of Bengal.*

CALCUTTA, *the 30th June 1923.*

**Statement showing the daily gauge readings of certain rivers at the stations named below for the week ending Thursday, the 28th June 1923.**

| Name of river and place where readings are taken. | | Date. | Hour | Reading on gauge. | Value of zero referred to P. W. D datum. | Height above P. W. D. datum | Compared with previous day's height | | Height above P W D datum on same date in— | | Remarks. |
|---|---|---|---|---|---|---|---|---|---|---|---|
| | | | | | | | Rise. | Fall. | 1922 | 1921. | |
| Ganges ... | Monghyr ... | 22nd June 1923 | 6 A.M. ... | 104·00′ | 0·00′ | 104·00′ | 0·60′ | ... | 102 50′ | 101 00′ | |
| | Rajmahal ... | 22nd „ „ | 6 „ ... | 12 95′ | 56·319′ | 69·269′ | 0·30′ | ... | 64 519′ | 62·619′ | |
| | Goalundo ... | 22nd „ „ | 8 hours ... | 20·30′ | 4 896′ | 25 196′ | Steady | | 21·696′ | 25·696′ | |
| Brahmaputra ... | Gauhati ... | 22nd „ „ | 8 A.M. ... | 18 80′ | 135·18′ | 153 98′ | ... | 0 20′ | 156 38′ | 156 18′ | |
| | Serajganj ... | 22nd „ „ | 12 hours ... | 35 80′ | 1·509′ | 37 309′ | ... | 0·20′ | 34 609′ | 40 709 | |
| | Dibrugarh ... | 22nd „ „ | 9 A.M. ... | 14 70′ | 314 18′ | 328 88′ | 0·10′ | ... | 333 88′ | 329 48′ | |
| Meghna ... | Bhairab Bazar | 22nd „ „ | 6 hours ... | 14 58′ | 1·61′ | 16 19′ | 0 42′ | ... | 12 11′ | 12·36′ | |
| | Chandpur ... | 22nd „ „ | 11-30 „ ... | 9 33′ | 1·61′ | 10 94′ | ... | 0·08′ | 9 86′ | ... | |
| | Fenchuganj ... | 22nd „ „ | 7 „ ... | 32 50′ | 1 509′ | 34 009′ | 0 05′ | ... | 24·909′ | 31 759′ | |
| Dhaleswari ... | Sabhar ... | 22nd „ „ | 6 A.M. ... | 24·60′ | – 8 62′ | 15·98′ | 0·60′ | ... | 11 98′ | 16 88′ | |
| Bhagirathi ... | Swarupganj ... | 22nd „ „ | 6 „ ... | 3 60′ | 1·509′ | 5 109′ | 0 09′ | ... | 16 869′ | 6 369′ | |
| Damodar ... | Edilpur ... | 22nd „ „ | 6 „ ... | 1·25′ | 92·58′ | 93 83′ | 0·54′ | ... | 104 91′ | 95·50′ | |
| Lakhya ... | Narayanganj | 22nd „ „ | 8 „ ... | 18·87′ | – 5 59′ | 13 28′ | ... | 0.02′ | 11 64′ | 15·49 | |
| Madaripur Bil Route | Takerhat ... | 22nd „ „ | 6 „ ... | 88·80′ | – 0 599′ | 88 201′ | 0 20′ | ... | 7·751′ | 9·501′ | |

**Statement showing the daily gauge readings of certain rivers at the stations named below for the week ending Thursday, the 28th June 1923.**

| Name of river and place where readings are taken | | Date. | Hour. | Reading on gauge. | Value of zero referred to P. W. D datum. | Height above P. W. D datum. | Compared with previous day's height. | | Height above P. W. D. datum on same date in— | | Remarks. |
|---|---|---|---|---|---|---|---|---|---|---|---|
| | | | | | | | Rise. | Fall. | 1922 | 1921 | |
| Ganges | Monghyr ... | 23rd June 1923 | 6 A.M. ... | 104·30′ | 0·00′ | 104·30′ | 0·30′ | ... | 102·60′ | 101·40′ | |
| | Rajmahal ... | 23rd " " | 6 " ... | 13·20′ | 56 319′ | 69·519′ | 0·25′ | ... | 64·619′ | 62·919′ | |
| | Goalundo ... | 23rd " " | 8 hours ... | 20 10′ | 4 896′ | 24·996′ | ... | 0 20′ | 22·296′ | 25 596′ | |
| Brahmaputra | Gauhati ... | 23rd " " | 8 A.M. ... | 18 50′ | 135 18′ | 153·68′ | ... | 0·30′ | 155·98′ | 155·78′ | |
| | Serajganj ... | 23rd " " | 12 hours ... | 35 30′ | 1 509′ | 36·809′ | ... | 0 30′ | 35·309′ | 40·409′ | |
| | Dibrugarh ... | 23rd " " | 9 A M. ... | 14·80′ | 314 18′ | 328 98′ | 0·10′ | ... | 333 78′ | 329·78′ | |
| Meghna | Bhairab Bazar | 23rd " " | 6 hours ... | 15 08′ | 1 61′ | 16 69′ | 0 50′ | ... | 12·44′ | ... | |
| | Chandpur ... | 23rd " " | 13 " ... | 9 33′ | 1 61′ | 10·94′ | Steady | | 9 61′ | 12 61′ | |
| | Fenchuganj ... | 23rd " " | 7 " ... | 32 50′ | 1 509′ | 34 009′ | Steady | | 25 409′ | 31·659′ | |
| Dhaleswari | ... Sabhar ... | 23rd " " | 6 A.M. ... | 24 70′ | – 8 62 | 16·08′ | 0 10′ | ... | 12 48′ | 16 78′ | |
| Bhagirathi | .. Swarupganj .. | 23rd " " | 6 " ... | 3 52′ | 1 509′ | 5·029′ | ... | 0 08′ | 17·599′ | 7·279′ | |
| Damodar | ... Edilpur ... | 23rd " " | 6 " ... | 2 58′ | 92 58′ | 95 16′ | 1 33′ | ... | 108 75′ | 98 58′ | |
| Lakhya | ... Narayanganj | 23rd " " | 8 " ... | 13 00′ | – 5 59′ | 13 41′ | 1 50′ | ... | 12 08′ | 15·41′ | |
| Madaripur Bil Route | Takerhat ... | 23rd " " | 6 " ... | 88 80′ | – 0 599′ | 88·201′ | Steady | | 7 801′ | 9·701′ | |

**Statement showing the daily gauge readings of certain rivers at the stations named below for the week ending Thursday, the 28th June 1923.**

| Name of river and place where readings are taken | | Date | Hour | Reading on gauge. | Value of zero referred to P. W D datum. | Height above P W D. datum. | Compared with previous day's height | | Height above P. W D. datum on same date in— | | Remarks. |
|---|---|---|---|---|---|---|---|---|---|---|---|
| | | | | | | | Rise | Fall | 1922. | 1921. | |
| Ganges ... | Monghyr ... | 24th June 1923 | 6 A.M. ... | 104·10′ | 0·00′ | 104 10′ | ... | 0·20′ | 104·00′ | 101·70′ | |
| | Rajmahal ... | 24th „ „ ... | 6 „ ... | ... | 56·319′ | ... | ... | ... | 65·119′ | 63 019′ | |
| | Goalundo ... | 24th „ „ ... | 8 hours ... | 19·90′ | 4 896′ | 24·796′ | ... | 0 20′ | 22·996′ | 25 296′ | |
| Brahmaputra ... | Gauhati ... | 24th „ „ ... | 8 A.M. ... | 18·30′ | 135 18′ | 153 48′ | ... | 0 20′ | 155·98′ | 155·58′ | |
| | Serajganj ... | 24th „ „ ... | 12 hours ... | 35·20′ | 1·509′ | 36·709′ | ... | 0 30′ | 35·909′ | 40 209′ | |
| | Dibrugarh ... | 24th „ „ ... | 9 A.M. ... | 14·50′ | 314·18′ | 328 68′ | ... | 0 30′ | 336 48′ | 329·78′ | |
| Meghna ... | Bhairab Bazar | 24th „ „ ... | 6 hours ... | 15·50′ | 1·61′ | 17.11′ | 0·42′ | ... | 12 78′ | ... | |
| | Chandpur ... | 24th „ „ ... | 14 „ ... | 9 83′ | 1 61′ | 11 44′ | 0 50′ | ... | 9 86′ | 12 61′ | |
| | Fenchuganj ... | 24th „ „ ... | 7 „ ... | 32 40′ | 1 509′ | 33 909′ | ... | 0·10′ | 25·809′ | 31·559′ | |
| Dhaleswari ... | Sabhar ... | 24th „ „ ... | 6 A.M. ... | 24 60′ | –8·62′ | 15 98′ | ... | 0 10′ | 12 98 | 16·68 | |
| Bhagirathi ... | Swarupganj ... | 24th „ „ ... | 6 „ ... | 3 66′ | 1 509′ | 5·169′ | 0·14′ | ... | 18·169′ | 7·479′ | |
| Damodar ... | Edilpur ... | 24th „ „ ... | 6 „ ... | 3·08′ | 92 58′ | 95 64′ | 0·50′ | ... | 104 58 | 100·41′ | |
| Lakhya ... | Narayanganj | 24th „ „ ... | 8 „ ... | 19·33′ | –5 59′ | 13 74′ | 0·33′ | ... | 12·55′ | 15·14′ | |
| Madaripur Bil Route | Takerhat ... | 24th „ „ ... | 6 „ ... | 88·75′ | –0 599′ | 88·151′ | ... | 0·05′ | 7·801′ | 9·701′ | |

**Statement showing the daily gauge readings of certain rivers at the stations named below for the week ending Thursday, the 28th June 1923.**

| Name of river and place where readings are taken | | Date | Hour | Reading on gauge | Value of zero referred to P W D datum | Height above P W D datum. | Compared with previous day's height: Rise. | Compared with previous day's height: Fall. | Height above P. W D datum on same date in— 1922. | Height above P. W D datum on same date in— 1921. | Remarks. |
|---|---|---|---|---|---|---|---|---|---|---|---|
| Ganges | Monghyr | 25th June 1923 | 6 A.M. | 104·00′ | 0 00 | 104·00′ | .. | 0·10′ | 105 30′ | 102·30′ | |
| | Rajmahal | 25th „ „ | 6 „ | | 56 319′ | | | | 65 619′ | 63·819′ | |
| | Goalundo | 25th „ „ | 8 hours | 19 90′ | 4 896′ | 24 796′ | Steady | | 21·196′ | 24·896′ | |
| Brahmaputra | Gauhati | 25th „ „ | 8 A M. | 18 00′ | 135·18′ | 153 18 | ... | 0 30′ | 156 98′ | 155 68′ | |
| | Serajganj | 25th „ „ | 12 hours | 35 10′ | 1·509′ | 36 609 | ... | 0·10 | 36 459′ | 40 109′ | |
| | Dibrugarh | 25th „ „ | 9 A.M. | 14 50′ | 314 18′ | 328 68′ | Steady | | 338 48′ | 330 68′ | |
| Meghna | Bhairab Bazar | 25th „ „ | 6 hours | 15 92′ | 1 61′ | 17 53 | 0·42′ | ... | 13 28′ | ... | |
| | Chandpur | 25th „ „ | 15 „ | 10 50′ | 1 61′ | 12 11′ | 0 67′ | ... | 10 36′ | 12 36′ | |
| | Fenchuganj | 25th „ „ | 7 „ | 32 20 | 1 509′ | 33 709′ | ... | ... | 26 309′ | 31 309′ | |
| Dhaleswari | Sabhar | 25th „ „ | 6 A M. | 24 70′ | −8 62′ | 16·08′ | 0·10′ | ... | 13 48′ | 16 48′ | |
| Bhagirathi | Swarupganj | 25th „ „ | 6 „ | 4 14 | 1 509′ | 5·649′ | 0 48′ | ... | 18 149′ | 8 379′ | |
| Damodar | Edilpur | 25th „ „ | 6 „ | 3 25′ | 92 58′ | 95 83′ | 0 17′ | ... | 104·33′ | 101·08′ | |
| Lakhya | Narayanganj | 25th „ „ | 8 „ | 19 64′ | −5 59′ | 14 05′ | 0·31′ | ... | 13 16′ | 14·91′ | |
| Madaripur Bil Route | Takerhat | 25th „ „ | 6 „ | 89 00′ | −0 599′ | 88·401′ | 0 25′ | ... | 8 101′ | 9 451′ | |

**Statement showing the daily gauge readings of certain rivers at the stations named below for the week ending Thursday, the 28th June 1923.**

| Name of river and place where readings are taken | | Date. | Hour | Reading on gauge | Value of zero referred to P. W. D. datum. | Height above P. W. D datum. | Compared with previous day's height. | | Height above P. W. D datum on same date in— | | Remarks. |
|---|---|---|---|---|---|---|---|---|---|---|---|
| | | | | | | | Rise. | Fall. | 1922. | 1921. | |
| Ganges ... | Monghyr ... | 26th June 1923 | 6 A. M. ... | 104 50′ | 0 00′ | 104 50′ | 0 50′ | ... | 107 00′ | 104·50′ | |
| | Rajmahal ... | 26th „ „ ... | 6 „ ... | ... | 56·319′ | ... | ... | ... | 66·819′ | 64 119′ | |
| | Goalundo .. | 26th „ „ ... | 8 hours ... | 19 80′ | 4 896′ | 24 696′ | ... | 0 10′ | 21·896′ | 24 796′ | |
| Brahmaputra .. | Gauhati ... | 26th „ „ ... | 8 A M. ... | 17·90′ | 135 18′ | 153·08′ | ... | 0·10′ | 157·38′ | 155 88′ | |
| | Serajganj ... | 26th „ „ ... | 12 hours ... | 34 90′ | 1 509′ | 36 409′ | ... | 0 20′ | 37 209′ | 39·709′ | |
| | Dibrugarh ... | 26th „ „ ... | 9 A M .. | 14 80′ | 314 18′ | 328 98′ | 0 30′ | ... | 337 98′ | 330 68′ | |
| Meghna ... | Bhairab Bazar | 26th „ „ ... | 6 hours ... | 16 33′ | 1 61′ | 17 94′ | 0 42′ | ... | 13 69′ | ... | |
| | Chandpur ... | 26th „ „ ... | 15-30 „ ... | 11 00′ | 1 61′ | 12 61′ | 0·50′ | ... | 11·11′ | 12 11′ | |
| | Fenchuganj .. | 26th „ „ ... | 7 „ ... | 32 05′ | 1·509′ | 33 559′ | ... | 0 15′ | 26 509′ | 31 209′ | |
| Dhaleswari ... | Sabhar ... | 26th „ „ ... | 6 A M ... | 24 30′ | – 8·62′ | 15·68′ | ... | 0·40′ | 13 98′ | 16·18′ | |
| Bhagirathi ... | Swarupganj ... | 26th „ „ ... | 6 „ ... | 4 30′ | 1·509′ | 5 809 | 0·16′ | ... | 17·879′ | 9·029′ | |
| Damodar ... | Edilpur ... | 26th „ „ ... | 6 „ ... | 3 50 | 92 58′ | 96·08′ | 0·25′ | ... | 104·33′ | 99 75′ | |
| Lakhya ... | Narayanganj... | 26th „ „ ... | 8 „ ... | 19 98′ | – 5·59′ | 14 39′ | 0 33′ | ... | 13 41′ | 14·74′ | |
| Madaripur Bil Route | Takerhat ... | 26th „ „ ... | 6 „ ... | 89 10′ | – 0·599′ | 88 501′ | 0·10′ | ... | 8 401′ | 9·351′ | |

**Statement showing the daily gauge readings of certain rivers at the stations named below for the week ending Thursday, the 28th June 1923.**

| Name of river and place where readings are taken. | | Date. | Hour. | Reading on gauge | Value of zero referred to P. W. D. datum. | Height above P. W. D. datum | Compared with previous day's height | | Height above P. W. D. datum on same date in— | | Remarks. |
|---|---|---|---|---|---|---|---|---|---|---|---|
| | | | | | | | Rise. | Fall. | 1922 | 1921. | |
| anges ... ... | Monghyr ... | 27th June 1923 | 6 A.M ... | 104 70′ | 0 00′ | 104·70 | 0·20′ | ... | 108 10′ | 106·70′ | |
| | Rajmahal ... | 27th „ „ ... | 6 „ | | 56 319′ | | | | 67 919′ | 65 119′ | |
| | Goalundo ... | 27th „ „ ... | 8 hours ... | 19 80 | 4 896 | 24 696′ | Steady | | 22 396′ | 24 796′ | |
| rahmaputra ... | Gauhati ... | 27th „ „ ... | 8 A.M. .. | 17 80′ | 135 18′ | 152 98′ | .. | 0·10′ | 158 98′ | 156·08′ | |
| | Serajganj ... | 27th „ „ ... | 12 hours .. | 34 90′ | 1 509′ | 36 409′ | Steady | | 37 709′ | 39 909′ | |
| | Dibrugarh ... | 27th „ „ ... | 9 A.M. .. | 15 70 | 314 18′ | 329 88′ | 0 90′ | ... | 336 88′ | 330 88′ | |
| eghna ... ... | Bhairab Bazar | 27th „ „ ... | 6 hours | 16 50′ | 1 61′ | 18 11′ | 0 17′ | ... | 14 44′ | ... | |
| | Chandpur ... | 27th „ „ ... | 16-30 „ | 11 33′ | 1 61′ | 12 94′ | 0 33′ | ... | 11 61′ | 11 68′ | |
| | Fenchuganj ... | 27th „ „ ... | 7 „ | 31 85′ | 1 509′ | 33 359′ | .. | 0 20′ | 26·709′ | 30 909′ | |
| haleswari ... | Sabhar ... | 27th „ „ ... | 6 A.M | 24 60′ | − 8 62′ | 15 98′ | 0 30′ | | 14 58′ | 16 08′ | |
| hagirathi ... | Swarupganj ... | 27th „ „ ... | 6 „ ... | 4 84′ | 1 509′ | 6 349′ | 0 54′ | ... | 17·829′ | 9 449′ | |
| amodar ... | Edilpur ... | 27th „ „ ... | 6 „ ... | 4 08′ | 92 58′ | 96 64′ | 0 58′ | ... | 103 75′ | 100·33′ | |
| akhya ... | Narayanganj | 27th „ „ ... | 8 „ .. | 20 25′ | − 5 59′ | 14 66′ | 0 27′ | ... | 13 89′ | 14 58′ | |
| adaripur Bil Route | Takerhat ... | 27th „ „ ... | 6 „ ... | 89 20′ | − 0 599′ | 88·601′ | 0 10′ | ... | 8 551′ | 9 301′ | |

**Statement showing the daily gauge readings of certain rivers at the stations named below for the week ending Thursday, the 28th June 1923.**

| Name of river and place where readings are taken | Date. | Hour | Reading on gauge | Value of zero referred to P. W. D datum | Height above P. W. D. datum | Compared with previous day's height. Rise. | Compared with previous day's height. Fall. | Height above P. W. D. datum on same date in— 1922. | Height above P. W. D. datum on same date in— 1921 | Remarks. |
|---|---|---|---|---|---|---|---|---|---|---|
| Ganges ... Monghyr ... | 28th June 1923 | 6 A.M. ... | 105 00′ | 0·00′ | 105 00′ | 0 30′ | ... | 108 50′ | 108·20′ | |
| Ganges ... Rajmahal ... | 28th „ „ ... | 6 „ ... | ... | 56 319′ | ... | ... | ... | 69·319′ | 65·519′ | |
| Ganges ... Goalundo ... | 28th „ „ ... | 8 hours ... | 20 00′ | 4·896′ | 24 896′ | 0 20′ | ... | 22 896′ | 24·596′ | |
| Brahmaputra ... Gauhati ... | 28th „ „ ... | 8 A.M. ... | 17·50′ | 135 18′ | 152 68′ | ... | 0·30′ | 159·98′ | 156 78′ | |
| Brahmaputra ... Serajganj ... | 28th „ „ ... | 12 hours ... | 34 95′ | 1 509 | 36·459′ | 0 05′ | ... | 38·009′ | 39 609′ | |
| Brahmaputra ... Dibrugarh ... | 28th „ „ ... | 9 A.M. ... | 18 30′ | 314·18′ | 332 48′ | 2 60′ | ... | 337·78′ | 331 08′ | |
| Meghna ... Bhairab Bazar | 28th „ „ ... | 6 hours... | 16 67′ | 1 61′ | 18·28′ | 0·17′ | ... | 14·69′ | ... | |
| Meghna ... Chandpur ... | 28th „ „ ... | 5 „ ... | 11·25′ | 1 61′ | 12 86′ | ... | 0·08′ | 12·11′ | 11·61′ | |
| Meghna ... Fenchuganj ... | 28th „ „ ... | 7 „ ... | 31 70′ | 1·509′ | 33 209′ | ... | 0 15′ | 26·709′ | 30 859′ | |
| Dhaleswari ... Sabhar ... | 28th „ „ ... | 6 A.M. ... | 25 00′ | – 8·62′ | 16 38′ | 0·40′ | ... | 15·18′ | 15·88′ | |
| Bhagirathi ... Swarupganj ... | 28th „ „ ... | 6 „ ... | 4·85′ | 1 509′ | 6·359′ | 0·01′ | ... | 17·889′ | 9·639′ | |
| Damodar ... Edilpur ... | 28th „ „ ... | 6 „ ... | 6 12′ | 92 58′ | 98 70′ | 2·04′ | ... | 103·33′ | 101·75′ | |
| Lakhya ... Narayanganj | 28th „ „ ... | 8 „ ... | 20 58′ | – 5·59′ | 14 99′ | 0·33′ | ... | 14·03′ | 14·45′ | |
| Madaripur Bil Route Takerhat ... | 28th „ „ ... | 6 „ ... | 89·30′ | – 0 599′ | 88·701′ | 0·10′ | ... | 8·701′ | 9·301′ | |

## DISTRICT REPORTS ON WEATHER AND CROPS

For the week ending on the 27th June 1923.

**Summary.**—Monsoon was active giving moderate rain all over the province. It has facilitated the transplantation of winter paddy seedlings and improved the condition and growth of other standing crops generally. Harvesting of autumn paddy and jute continues in the low land tracts of Eastern Bengal. The average price of common rice for the province has risen by about 0·23 per cent. as compared with that of the previous week. The total number of persons employed on test relief works in Rajshahi from the 1st to the 15th instant was 133. The relief has since been closed.

| Serial No. | District and subdivision. | Rainfall. | Price of common rice, in seers, per rupee. This week | Previous week | Character of the weather, condition of crops, etc |
|---|---|---|---|---|---|
| 1 | 2 | 3 | 4 | 5 | 6 |
| | | Inches. | | | |
| 1 | 24-PARGANAS ... | 2·65 | 6 | 6 | Effects of weather on crops are good. Fodder and water are sufficient. |
| | Diamond Harbour. | 1·76 | $7\frac{7}{16}$ | $7\frac{3}{4}$ | |
| | Barrackpore ... | 1·14 | $6\frac{5}{8}$ | $6\frac{5}{8}$ | |
| | Barasat ... | 1·76 | $7\frac{5}{16}$ | $7\frac{5}{16}$ | |
| | Basirhat ... | 5·18 | $7\frac{5}{8}$ | $7\frac{5}{8}$ | |
| 2 | NADIA ... | 3·77 | $7\frac{1}{4}$ | $7\frac{1}{4}$ | Weeding of jute and *aus* paddy and transplantation of *aman* paddy at Sadar continue. Tilling of ground for transplantation of *aman* paddy in Ranaghat subdivision is going on. Prices are steady. |
| | Kushtia ... | 0·96 | $7\frac{1}{2}$ | $7\frac{1}{2}$ | |
| | Meherpur ... | 2·38 | $6\frac{1}{4}$ | $6\frac{3}{4}$ | |
| | Chuadanga ... | 4·46 | $7\frac{1}{4}$ | $7\frac{1}{4}$ | |
| | Ranaghat ... | 2·40 | $6\frac{1}{2}$ | $6\frac{1}{2}$ | |
| 3 | MURSHIDABAD | 2·31 | 8 | $8\frac{1}{4}$ | Prospects of standing crops are fair. Recent rain has improved *bhados* and winter paddy cultivation. Fodder is sufficient. No large import or export. |
| | Lalbagh ... | 6·02 | 8 | 8 | |
| | Jangipur ... | 1·91 | 9 | 9 | |
| | Kandi ... | 2·62 | $9\frac{1}{4}$ | 9 | |
| 4 | JESSORE . | 6·87 | $7\frac{1}{2}$ | 8 | Ploughing of lands for and transplantation of seedlings continue. Recent rain has done good to standing crops. Export of rice continues from Bongaon. Fodder and water are sufficient. |
| | Jhenidah ... | (*n*) | (*n*) | 7 | |
| | Magura ... | 5·65 | $7\frac{1}{4}$ | $7\frac{1}{4}$ | |
| | Narail ... | 3·75 | 7 | 7 | |
| | Bongaon ... | 3·05 | $7\frac{3}{8}$ | $7\frac{1}{4}$ | |
| 5 | KHULNA ... | 2·58 | $7\frac{1}{2}$ | 8 | Weather seasonable. Cattle-disease is reported from Shyamnagar police-station and Pratapnagar Beat House. Fodder and water are sufficient |
| | Satkhira ... | 1·06 | 8 | 8 | |
| | Bagerhat ... | 1·71 | 8 | 8 | |

(*n*) Not reported

| Serial No. | District and subdivision | Rainfall. | Price of common rice, in seers, per rupee. | | Character of the weather, condition of crops, etc. |
|---|---|---|---|---|---|
| | | | This week. | Previous week. | |
| 1 | 2 | 3 | 4 | 5 | 6 |
| | | Inches. | | | |
| 6 | BURDWAN ... | 2·06 | 7 | 7 | Weather cloudy. The effects of weather have been good to the seedlings of jute plants, autumn paddy and sugarcane. Ploughing of lands for *aman* paddy is going on. Condition and prospects of standing crops are fair. Water scarcity continues in some places of Kalna. |
| | Asansol ... | 1·55 | 6½ | 6½ | |
| | Katwa ... | 2·07 | 8¼ | 8½ | |
| | Kalna ... | 1·71 | 7⅛ | 7¼ | |
| 7 | BIRBHUM ... | 1·08 | 8½ | 8½ | Weather seasonable. Ploughing for and sowing of paddy seeds are going on. Fodder and water are sufficient. |
| | Rampurhat ... | 0·39 | 8½ | 8½ | |
| 8 | BANKURA ... | 4·55 | 8 | 8 | Weather cloudy with occasional rains. Condition of standing crops is fair. Export of rice and paddy continues. |
| | Vishnupur ... | 3·33 | 8¾ | 8½ | |
| 9 | MIDNAPORE ... | 4·39 | 8⅜ | 8⅜ | Sowing of broadcast winter paddy and *til* is progressing. Condition of tobacco and jute is favourable. Fodder is sufficient. Cattle-disease exists in Ghatal and Chandrakona thanas |
| | Contai ... | 0·98 | 8 | 9 | |
| | Tamluk ... | 3·75 | 6¾ | 6¾ | |
| | Ghatal ... | 1·40 | 7⅝ | 7½ | |
| | Jhargram ... | 2·65 | 8½ | 8½ | |
| 10 | HOOGHLY ... | 3·07 | 6½ | 6½ | The effects of weather are favourable. Fodder is sufficient. The price of rice is steady. |
| | Serampore ... | 0·57 | 6½ | 6½ | |
| | Arambagh ... | 0·45 | 8½ | 8½ | |
| 11 | HOWRAH ... | 2·16 | 6½ | 6½ | The rain has accelerated the agricultural operations |
| | Uluberia ... | 1·68 | 7½ | 7½ | |
| 12 | RAJSHAHI (RAMPUR-BOALIA). ... | 1·30 | 7½ | 7½ | Rainfall moderate Prospects of standing crops are fair. Fodder is sufficient. Relief works are closed. |
| | Naogaon ... | 0·80 | 6¼ | (*n*) | |
| | Nator ... | 5·92 | 7⅛ | 7¼ | |
| 13 | DINAJPUR ... | 3·47 | 8⅛ | 9 | Prospects of jute and other *bhadoi* crops are fair. Cattle-disease is reported from Thakurgaon, Atwari and Birganj police-stations in Thakurgaon subdivision. Fodder and water are sufficient. |
| | Thakurgaon ... | 4·59 | 9 | 9 | |
| | Balurghat ... | 0·39 | 8⅛ | 8⅛ | |
| 14 | JALPAIGURI ... | 2·29 | 7 | 7 | Condition and prospects of *bhadoi* paddy and jute are unsatisfactory. |
| | Alipur ... | 3·12 | 6½ | 6½ | |

(*n*) Not reported.

| Serial No. | District and subdivision. | Rainfall. | Price of common rice, in seers, per rupee. This week. | Previous week. | Character of the weather, condition of crops, etc. |
|---|---|---|---|---|---|
| 1 | 2 | 3 | 4 | 5 | 6 |
| | | Inches. | | | |
| 15 | DARJEELING ... | 5·20 | 5 | 5 | Maize and *marua* are progressing. Potatoes are being harvested. Fodder and water are sufficient. Cattle-disease exists at places. |
| | Kurseong ... | 7·07 | 6 | 6 | |
| | Siliguri ... | 8·60 | 7 | 6 | |
| | Kalimpong ... | 2·92 | 5¾ | 5¾ | |
| 16 | RANGPUR ... | 4·57 | 7¼ | 7¼ | Weather cloudy. Reaping of jute is going on. Transplantation of winter paddy continues. The prospects of standing crops are good. Fodder and water are sufficient. |
| | Nilphamari ... | 5·19 | 7 | 7 | |
| | Kurigram ... | 4·82 | 7¼ | 7¼ | |
| | Gaibandha ... | 1·25 | 7⅜ | 7⅜ | |
| 17 | BOGRA ... | 2·53 | 7½ | 7⅞ | Sowing of *aman* paddy seedlings continues. More rain is required for the transplantation. Weeding of jute and *aus* paddy continues. |
| 18 | PABNA ... | 3·19 | 7¼ | 7¼ | Rains have done much good to the standing crops. Weeding still continues. Stock of rice, pasturage, fodder and water supply are sufficient. |
| | Sirajganj ... | 4·04 | 6¾ | 6¾ | |
| 19 | MALDA ... | 7·25 | 8 | 8 | Prospects of standing crops are fair. |
| 20 | COOCH BEHAR | 2·98 | 8 | 8 | Weather seasonable. Preparation of lands for *haimanti* paddy and rearing of seedlings in nurseries and their transplantation are going on. Condition of standing crops is fair. Fodder is sufficient. Outbreak of cattle-disease is reported from the interior. |
| 21 | DACCA ... | 2·86 | 7½ | 7½ | Weather seasonable. Prospects of paddy and jute are satisfactory. Harvesting of *aus* rice and summer *til* has commenced. Fodder and water are sufficient. Cattle-disease is reported from the Narayanganj subdivision. |
| | Manikganj ... | 1·22 | 7¾ | 7¼ | |
| | Narayanganj ... | 1·82 | 7½ | 7½ | |
| | Munshiganj (a) | 4·77 | 7 | 7 | |
| 22 | MYMENSINGH ... | 1·92 | 7 | 7 | Weather rainy and cloudy. Transplantation of winter paddy continues. Early gathering of jute has commenced. The price of rice is rising. Prospects of standing crops are fair. Fodder and water are sufficient. |
| | Jamalpur ... | 1·68 | 8 | 8 | |
| | Tangail ... | 0·65 | 7⅛ | 7⅛ | |
| | Netrakona ... | 2·05 | 7¾ | 7¾ | |
| | Kishorganj ... | 1·35 | 7 | 7 | |

(a) Munshiganj being very near to Dacca and Narayanganj, its rainfall statistics are not quoted. To give information regarding the northern part of the district, rainfall figures for Kapasia thana are reported here.

| Serial No. | District and subdivision. | Rainfall. | Price of common rice, in seers, per rupee. | | Character of the weather, condition of crops, etc. |
|---|---|---|---|---|---|
| | | | This week. | Previous week. | |
| 1 | 2 | 3 | 4 | 5 | 6 |
| | | Inches. | | | |
| 23 | FARIDPUR ... | 1·71 | 8 | 7½ | Weeding of jute and paddy continues. Prospects and state of standing crops are favourable. Fodder is sufficient. |
| | Goalundo (Rajbari). | 1·37 | 7¼ | 7¼ | |
| | Madaripur ... | 3·27 | 8 | 8 | |
| | Gopalganj (a) ... | 1·08 | 7 | 7 | |
| 24 | BAKARGANJ (BARISAL). | 3·12 | 7¼ | 7½ | Weather seasonable. Prospects of standing crops are good. Fodder and water are sufficient. |
| | Pirojpur ... | 4·39 | 7 | 7 | |
| | Patuakhali ... | 7·20 | 7 | 7 | |
| | Dakshin Shabazpur (Bhola). | 4·34 | 7 | 7 | |
| 25 | CHITTAGONG ... | 11·69 | 6<br>6¼* | 6¼<br>6½* | Weather seasonable. Prospects of standing crops are good. Water and fodder are sufficient. *Panya* salt is selling at 11 seers per rupee at Sadar subdivision and 8 seers at Cox's Bazar. |
| | Cox's Bazar ... | 9·22 | 7 | 7 | |
| 26 | TIPPERA (COMILLA). | 5·48 | 7¼ | 7 7/16 | Weather cloudy. Prospects of standing crop are good. Weeding of autumn crops is almost completed. Cattle-disease is reported from Brahmanbaria subdivision. |
| | Brahmanbaria | 3·51 | 6 2/3 | 6 3/8 | |
| | Chandpur ... | 2·77 | 6⅔ | 6 27/32 | |
| 27 | NOAKHALI ... | 5·36 | 6½ | 6¼ | Weather seasonable. Prospects of standing crop are good. Fodder and water are sufficient. |
| | Feni ... | 7·19 | 6½ | 6¼ | |
| 28 | CHITTAGONG HILL TRACTS. | 3·99 | 7 | 7 | Weather seasonable. Fodder and water are sufficient. |
| 29 | TRIPURA STATE | 6·34 | 7½ | 8 | Weather seasonable. Ploughing for paddy and weeding of jute and *jhoom* crops are going on. The crops in some divisions have been affected by heavy rain. Fodder and water are sufficient. Prospects of crops are fair. Cleansed cotton is selling at Rs. 30 to Rs. 35 and jute at Rs. to Rs. 10. Condition of cattle is good. |

* Burma rice.

(a) The rainfall at Faridpur, which is very near to Gopalganj, is shown here.

J. C. ROY, for *Director of Agriculture, Bengal.*

DACCA, *the 30th June 1923.*

***Wholesale prices-current of food-grains, salt, etc., in the undermentioned marts of Bengal for the first-half of June 1923.***

| Marts | PADDY, LOCAL (BEST QUALITY) | | | PADDY, LOCAL (COMMON QUALITY) | | | RICE, LOCAL (BEST QUALITY). | | |
|---|---|---|---|---|---|---|---|---|---|
| | Present return | Next preceding return | Corresponding return of last year | Present return | Next preceding return. | Corresponding return of last year | Present return | Next preceding return | Corresponding return of last year |
| 1 | 2 | 3 | 4 | 5 | 6 | 7 | 8 | 9 | 10 |
| | Rs. A. P. | Rs. A. P. | Rs. A. P. | Rs. A. P. | Rs. A. P. | Rs. A. P. | Rs. A. P. | Rs. A. P. | Rs. A. P. |
| Calcutta | 3 14 0 | 3 14 0 | 4 12 0 | 3 4 0 | 3 4 0 | 4 6 0 | 9 4 0 | 9 4 0 | 9 8 0 |
| Burdwan | 2 12 0 | 2 12 0 | 4 0 0 | 2 10 0 | 2 10 0 | 3 11 0 | 8 0 0 | 8 1 0 | 8 0 0 |
| Raniganj | | | | | | | | | |
| Midnapore | 2 11 0 | 2 11 0 | 3 10 0 | 2 4 0 | 2 4 0 | 3 3 0 | 6 8 0 | 6 8 0 | 7 12 0 |
| Chittagong | 3 0 0 | 3 0 0 | 3 10 0 | 2 12 0 | 2 12 0 | 3 6 0 | 8 0 0 | 8 0 0 | 10 4 0 |
| Dacca | 3 4 0 | 3 4 0 | 4 0 0 | 3 2 0 | 3 2 0 | 3 10 0 | 6 4 0 | 6 4 0 | 8 0 0 |
| Pabna | 3 3 0 | 3 4 0 | 3 14 0 | 3 0 0 | 3 1 0 | 3 12 0 | 7 8 0 | 7 8 0 | 8 0 0 |
| Rangpur | 3 8 0 | 3 8 0 | 3 12 0 | 3 4 0 | 3 4 0 | 3 0 0 | 7 8 0 | 7 6 0 | 7 8 0 |
| Serajganj (Pabna) | | | | | | | | | |
| Sarisabari (Mymensingh) | | | | | | | | | |
| Narayanganj (Dacca). | | | | | | | | | |

| Marts | RICE, LOCAL (COMMON QUALITY) | | | WHEAT | | | KALAI DAL | | |
|---|---|---|---|---|---|---|---|---|---|
| | Present return | Next preceding return | Corresponding return of last year | Present return | Next preceding return | Corresponding return of last year | Present return | Next preceding return | Corresponding return of last year. |
| | 11 | 12 | 13 | 14 | 15 | 16 | 17 | 18 | 19 |
| | Rs. A. P. | Rs. A. P. | Rs. A. P. | Rs. A. P. | Rs. A. P. | Rs. A. P. | Rs. A. P. | Rs. A. P. | Rs. A. P. |
| Calcutta | 7 0 0 | 7 0 0 | 8 0 0 | 4 12 0 | 4 12 0 | 5 8 0 | 6 4 0 | 6 4 0 | 6 0 0 |
| Burdwan | 5 8 0 | 5 8 0 | 8 4 0 | (a) | 5 8 0 | 7 0 0 | 8 0 0 | 8 0 0 | 7 8 0 |
| Raniganj | | | | | | | | | |
| Midnapore | 4 10 0 | 4 10 0 | 6 2 0 | (c) | (c) | (a) | 7 4 0 | 7 4 0 | 8 8 0 |
| Chittagong | 6 0 0 | 6 0 0 | 6 12 0 | | | | | | |
| Dacca | 5 4 0 | 5 4 0 | 6 12 0 | 6 8 0 | 6 8 0 | 7 0 0 | 5 0 0 | 5 0 0 | 5 0 0 |
| Pabna | 5 2 0 | 5 4 0 | 6 12 0 | 4 0 0 | 4 0 0 | 6 8 0 | 7 0 0 | 7 0 0 | |
| Rangpur | 6 12 0 | 6 12 0 | 5 12 0 | 8 0 0 | 8 0 0 | 7 8 0 | | | |
| Serajganj (Pabna). | | | | | | | | | |
| Sarisabari (Mymensingh). | | | | | | | | | |
| Narayanganj (Dacca). | | | | | | | | | |

(a) Not available
(c) No transaction

***Wholesale prices-current of food-grains, salt, etc., in the undermentioned marts of Bengal for the first-half of June 1923.***

| Marts. | Gram | | | Arhar Dal. | | | Linseed. | | |
|---|---|---|---|---|---|---|---|---|---|
| | Present return. | Next preceding return. | Corresponding return of last year. | Present return. | Next preceding return. | Corresponding return of last year. | Present return. | Next preceding return. | Corresponding return of last year. |
| | 20 | 21 | 22 | 23 | 24 | 25 | 26 | 27 | 28 |
| | Rs. A. P. | Rs. A. P. | Rs. A. P. | Rs. A. P. | Rs. A. P. | Rs. A. P. | Rs. A. P. | Rs. A. P. | Rs. A. P. |
| Calcutta | 5 0 0 | 5 0 0 | 5 12 0 | 7 4 0 | 7 4 0 | 8 8 0 | 9 8 0 | 9 8 0 | 11 0 0 |
| Burdwan | 4 0 0 | 4 0 0 | 6 0 0 | 5 8 0 | 5 8 0 | 8 0 0 | (a) | (a) | 11 0 0 |
| Raniganj | | | | | | | | | |
| Midnapore | 4 8 0 | 4 8 0 | 7 6 0 | 7 0 0 | 7 0 0 | 10 8 0 | 7 8 0 | 8 4 0 | 8 12 0 |
| Chittagong | 5 0 0 | 5 0 0 | 7 0 0 | 7 8 0 | 7 8 0 | 10 0 0 | 16 0 0 | 16 0 0 | 10 0 0 |
| Dacca | 6 0 0 | 6 0 0 | 7 8 0 | 8 0 0 | 8 0 0 | 9 8 0 | 10 0 0 | 10 0 0 | 8 0 0 |
| Pabna | 3 12 0 | 3 12 0 | | 9 0 0 | 9 0 0 | 11 0 0 | 8 0 0 | 8 4 0 | 9 4 0 |
| Rangpur | 7 4 0 | 7 4 0 | | 8 8 0 | 8 8 0 | 9 0 0 | (a) | (a) | |
| Sirajganj (Pabna) | | | | | | | | | |
| Sarisabari (Mymensingh) | | | | | | | | | |
| Narayanganj (Dacca) | | | | | | | | | |

| Marts. | Mustard. | | | Ghee | | | Cotton (unginned). | | |
|---|---|---|---|---|---|---|---|---|---|
| | Present return. | Next preceding return. | Corresponding return of last year. | Present return. | Next preceding return. | Corresponding return of last year. | Present return. | Next preceding return. | Corresponding return of last year. |
| | 29 | 30 | 31 | 32 | 33 | 34 | 35 | 36 | 37 |
| | Rs. A. P. | Rs. A. P. | Rs. A. P. | Rs. A. P. | Rs. A. P. | Rs. A. P. | Rs. A. P. | Rs. A. P. | Rs. A. |
| Calcutta | 9 12 0 | 10 0 0 | 10 0 0 | 8 12 0 | 8 12 0 | 8 0 0 | 13 0 0 to 15 0 0 | 13 0 0 to 15 0 0 | 26 0 |
| Burdwan | 8 8 0 to 9 8 0 | 8 4 0 to 9 4 0 | 8 0 0 to 10 0 0 | 8 0 0 | 7 14 0 | 7 0 0 to 10 0 0 | | | |
| Raniganj | | | | | | | | | |
| Midnapore | 8 8 0 to 9 8 0 | 9 0 0 to 10 0 0 | 10 12 0 to 12 0 0 | 13 0 0 | 13 0 0 | 10 8 0 | | | |
| Chittagong | 10 0 0 | 10 0 0 | 9 8 0 | 9 8 0 to 12 0 0 | 9 8 0 | 10 8 0 | | | |
| Dacca | 7 8 0 | 7 8 0 | 9 0 0 | 12 0 0 | 12 0 0 | 11 0 0 | | | |
| Pabna | 7 12 0 | 7 12 0 | 9 0 0 | 8 8 0 | 8 8 0 | 6 8 0 | | | |
| Rangpur | 8 8 0 | 8 6 0 | 8 8 0 | 8 4 0 | 8 4 0 | 7 0 0 | | | |
| Sirajganj (Pabna) | | | | | | | | | |
| Sarisabari (Mymensingh). | | | | | | | | | |
| Narayanganj (Dacca). | | | | | | | | | |

(a) Not reported. (a) Not available.

***Wholesale prices-current of food-grains, salt, etc., in the undermentioned marts of Bengal for the first half of June 1923.***

| Marts | JUTE. | | | GHEE. | | | HIDE (COW) | | |
|---|---|---|---|---|---|---|---|---|---|
| | Present return. | Next preceding return. | Corresponding return of last year | Present return | Next preceding return. | Corresponding return of last year | Present return | Next preceding return | Corresponding return of last year. |
| | 38 | 39 | 40 | 41 | 42 | 43 | 44 | 45 | 46 |
| | Rs A P. | Rs A. P. | Rs. A P. | Rs A P. | Rs. A P | Rs A P | Rs A. P. | Rs. A. P | Rs A P |
| Calcutta | (1) (c) (2) (a) (3) 11 0 0 | (1) 12 0 0 (2) 11 8 0 (3) 10 0 0 | (1) 17 0 0 (2) 16 0 0 (3) 11 7 0 | 90 0 0 | 90 0 0 | 80 0 0 | 237 8 0* | 327 8 0* | 500 0 0* |
| Burdwan | .. | | | | | | | | ..... |
| Raniganj | | | | | | | | | |
| Midnapore | | | | | | | | | |
| Chittagong | | | | | | | | | |
| Dacca | | | | | | | | | |
| Pabna | | | | | | | | | |
| Rangpur | | | | | | | | | |
| Serajganj (Pabna) | (c) | 9 0 0 to 10 0 0 | 7 4 0 to 12 8 0 | | | | | | |
| Sarisabari (Mymensingh) | 10 0 0 to 12 0 0 | 10 0 0 to 12 0 0 | (a) | | | | | | |
| Narayanganj (Dacca). | 8 8 0 to 10 8 0 | 9 0 0 to 11 8 0 | 8 4 0 to 13 0 0 | | | | | | |

(1) Price of jut fours
(2) Price of district fours.
(3) Weighted average price

| Marts. | IRON | | | SALT | | | KEROSINE OIL | | |
|---|---|---|---|---|---|---|---|---|---|
| | Present return | Next preceding return | Corresponding return of last year | Present return | Next preceding return | Corresponding return of last year | Present return | Next preceding return. | Corresponding return of last year. |
| | 47 | 48 | 49 | 50 | 51 | 52 | 53 | 54 | 55 |
| | Rs A. P. | Rs A. P | Rs A P | Rs A P | Rs A P | Rs A P | Rs A. P | Rs. A P | Rs A. P. |
| Calcutta | (a) 11 0 0 to 12 0 0 | (a) 11 0 0 to 12 0 0 | (a) | 3 7 0* | 3 8 0 | 3 6 0* | Swan 5 14 0 Rising sun 7 5 0 Elephant 7 7 0 | Swan 5 14 0 Rising sun 7 5 0 Elephant 7 7 0 | 4 4 0 Elephant |
| Burdwan | | | | | | | | | |
| Rangpur | | | | | | | | | |
| Midnapore | | | | | | | | | |
| Chittagong | | | | | | | | | |
| Dacca | | | | | | | | | |
| Pabna | | | | | | | | | |
| Raniganj | | | | | | | | | |
| Serajganj (Pabna) | ..... | | | ... | | | | .. | .. |
| Sarisabari (Mymensingh). | ... | | | | | ... | | | |
| Narayanganj (Dacca). | ..... | ..... | .. | | .. | | ... | | .. |

* Per maund. (a) British mild steel per cwt. (c) No transaction.

**Wholesale prices current of food-grains, salt, etc., in the undermentioned marts of Bengal for the first half of June 1923.**

| Marts. | MUSTARD OIL. | | | FIREWOOD. | | | COAL (BENGAL). | | |
|---|---|---|---|---|---|---|---|---|---|
| | Present return | Next preceding return. | Corresponding return of last year | Present return. | Next preceding return | Corresponding return of last year. | Present return | Next preceding return | Corresponding return of last year. |
| | 56 | 57 | 58 | 59 | 60 | 61 | 62 | 63 | 64 |
| | RS. A. P. | RS. A. P. | RS. A. P. | RS. A. P. | RS. A. P. | RS. A. P. | RS. A. P. | RS. A. P. | RS. A. P. |
| Calcutta | (x) | 22 8 0 | 25 0 0 | 0 11 6 | 0 11 6 | 0 9 6 | (x) | (x) | .. |
| Burdwan | | | | | | | | | |
| Raniganj | | | | | | | 0 4 0 | 0 4 0 | 0 6 6 |
| Midnapore | | | | | | | | | |
| Chittagong | | | | | | | | | |
| Dacca | | | | | | | | | |
| Pabna | | | | | | | | | |
| Rangpur | | | | | | | | | |
| Serajganj (Pabna) | | | | | | | | | |
| Sarisabari (Mymensingh) | | | | | | | | | |
| Narayanganj (Dacca) | | | | | | | | | |

(x) Not reported.

J. C. ROY, for *Director of Agriculture, Bengal.*

DACCA, *the 25th June 1923.*

***Prices-current (retail) of food-grains, salt, etc., in the districts of Bengal for the first half of June 1923.***

| Division | Number. | Districts and Marts | Common rice. Average. Present return | Common rice. Average. Next preceding return | Common rice. Average. Corresponding return of last year | Common rice. Cheapest. Present return | Common rice. Cheapest. Next preceding return | Common rice. Cheapest. Corresponding return of last year | Kalai dal (*Phaseolus radiatus*). Present return | Kalai dal. Next preceding return | Kalai dal. Corresponding return of last year | Arhar dal or Tur (Cajanus indicus). Present return | Arhar dal. Next preceding return | Arhar dal. Corresponding return of last year | Salt. Present return | Salt. Next preceding return | Salt. Corresponding return of last year |
|---|---|---|---|---|---|---|---|---|---|---|---|---|---|---|---|---|---|
| | | | QUANTITY PER RUPEE IN SEERS OF EIGHTY TOLAS | | | | | | | | | | | | | | |
| | | | S. Ch | S. Ch | S. Ch | S. Ch | S. Ch | S. Ch | S. Ch | S. Ch | S. Ch | S. Ch | S. Ch | S. Ch | S. Ch | S. Ch | S. Ch |
| | | **24 Parganas** | | | | | | | | | | | | | | | |
| Presidency | 1 | Chetla Hât | 6 0 | 6 0 | 5 0 | 7 0 | 7 4 | 6 8 | 6 0 | 6 0 | 4 8 | 5 0 | 5 0 | 4 0 | 10 0 / 9 8* | 10 0 / 9 8* | 10 8 |
| | 2 | Magra Hât | 9 8 | 7 9 | 5 5 | 9 0 | 8 0 | 6 2 | (a) | (a) | (a) | 5 0 | 5 15 | 4 0 | 11 6 | 10 4 | 8 14 |
| | 3 | Calcutta Bollaghata | 5 5 | 5 5 | 4 11 | 8 4 | 8 4 | 7 0 | 5 15 | 5 15 | 6 2 | 5 3 | 5 3 | 4 7 | 8 0† | 8 0† | 10 0 |
| | | **Nadia** | | | | | | | | | | | | | | | |
| | 4 | Gouri | 7 4 | 7 9 | 6 2 | 7 3 | 7 9 | 6 15 | 4 9 | 4 9 | 4 11 | 5 5 | 5 5 | 4 11 | 9 0† | 9 0† | 12 4 |
| | 5 | Ranaghat | 6 8 | 6 8 | 5 4 | 7 0 | 7 0 | 5 12 | 4 8 | 4 8 | 4 8 | 4 8 | 4 8 | 4 0 | 9 0† | 9 0† | 10 8 |
| | | **Murshidabad** | | | | | | | | | | | | | | | |
| | 6 | Berhampore | 8 0 | 8 0 | 5 0 | 8 4 | 8 8 | 6 0 | 5 12 | 5 0 | 5 5 | 8 8 | 8 0 | 5 5 | 9 0 / 8 0 | 9 8 / 8 8 | 12 12 |
| | 7 | Kandi | 9 4 | 9 4 | 6 10 | 9 8 | 9 6 | 6 12 | 5 1 | 5 8 | (a) | 8 0 | 7 0 | 4 8 | 9 8† | 9 8† | 12 0 |
| | 8 | Jangipur | 9 2 | 8 12 | 6 0 | 9 4 | 9 0 | 6 4 | 4 10 | 4 10 | 4 0 | 6 8 | 6 8 | 5 0 | 9 4† | 9 4* | 13 0 |
| | | **Jessore** | | | | | | | | | | | | | | | |
| | 9 | Sadar | 7 8 | 7 12 | 7 0 | 8 0 | 8 0 | 7 8 | 4 0 | 3 4 | 4 0 | 4 8 | 4 0 | 3 8 | 8 0 / 8 8* | 9 0* | 11 0 |
| | 10 | Bongaon | 7 4 | 7 0 | 6 0 | 8 0 | 8 0 | 7 0 | 3 8 | 3 8 | 3 4 | 4 8 | 5 0 | 4 0 | 9 0† | 9 0† | 9 0 |
| | | **Khulna** | | | | | | | | | | | | | | | |
| | 11 | Sadar | 8 0 | 8 0 | 7 0 | 9 0 | 8 8 | 7 8 | 6 8 | 7 0 | 5 0 | 4 0 | 4 0 | 4 0 | 8 4† | 8 4† | 8 0 |
| | 12 | Bagerhat | 8 0 | 8 0 | 7 0 | 8 4 | 8 4 | 8 0 | 7 0 | 7 0 | 5 8 | 4 4 | 4 4 | 3 8 | 8 0† | 8 0† | 8 0 |
| | | **Burdwan** | | | | | | | | | | | | | | | |
| | 13 | Sadar | 7 8 | 8 0 | 6 8 | 9 0 | 9 0 | 7 4 | 5 8 | 5 8 | 5 0 | 8 0 | 7 8 | 4 4 | 9 8† | 10 0† | 14 0 |
| | 14 | Kalna | 7 4 | 7 4 | 5 8 | 8 0 | 8 0 | [illegible] 11 | 5 0 | 5 0 | 5 0 | 5 0 | 4 11 | 3 12 | 8 14† | 8 0† | 16 13 |
| | | **Birbhum** | | | | | | | | | | | | | | | |
| | 15 | Suri | 8 0 | 8 4 | 6 0 | 9 0 | 9 0 | 6 4 | 5 4 | 5 8 | 5 6 | 5 8 | 5 8 | 4 8 | 10 0 | 10 0* | 10 8 |
| | 16 | Rampur Hât | 8 8 | 8 8 | 6 0 | 9 0 | 9 0 | 6 4 | 5 8 | 5 0 | 5 0 | 6 0 | 6 0 | 4 8 | 10 0† | 10 0† | 11 0 |
| | | **Bankura** | | | | | | | | | | | | | | | |
| | 17 | Sadar | 8 0 | 8 0 | 6 4 | 8 8 | 8 8 | 7 0 | 6 8 | 6 8 | 6 4 | 6 8 | 6 8 | 4 0 | 11 0 / 12 0 | 11 0 / 12 0* | 11 0 |
| | 18 | Vishnupur | 8 2 | 8 2 | 6 0 | 9 8 | 9 0 | 6 8 | 7 8 | 7 4 | 5 8 | 6 8 | 6 8 | 4 0 | 9 0 / 10 0* | 10 0 / 11 0* | 10 0 |
| | | **Midnapore** | | | | | | | | | | | | | | | |
| | 19 | Sadar | 8 6 | 8 6 | 6 8 | 8 11 | 8 11 | 6 14 | 5 4 | 5 4 | 4 0 | 5 4 | 5 4 | 3 8 | 9 0* / 8 0 | 9 0 / 8 0* | 8 0 |
| | 20 | Contai | 9 0 | 9 0 | 6 4 | 10 0 | 10 0 | 6 8 | 5 8 | 5 8 | 4 4 | 5 8 | 5 0 | 3 13 | 9 0 | 9 0 | 9 0 |
| | | **Hooghly** | | | | | | | | | | | | | | | |
| | 21 | Sadar | 6 8 | 6 8 | 5 0 | 7 4 | 7 4 | 5 10 | 5 8 | 5 8 | 5 0 | 6 4 | 6 0 | 5 0 | 10 0 / 8 12 | 10 0 / 8 12* | 10 0 |
| | 22 | Arambagh | 8 8 | 8 8 | 6 8 | 9 0 | 9 0 | 6 13 | 4 4 | 4 8 | 4 0 | 4 0 | 4 4 | 3 8 | 8 4 / 8 0 | 8 6 / 8 0* | 8 4 |
| | | **Howrah** | | | | | | | | | | | | | | | |
| | 23 | Sadar | 6 8 | 6 8 | 6 0 | 8 0 | 7 8 | 6 8 | 6 0 | 5 12 | 5 8 | 5 8 | 5 8 | 4 8 | 11 0 / 10 0* | 11 0 / 10 0* | 10 0 |
| | 24 | Uluberia | 7 0 | 7 0 | 5 6 | 7 8 | 8 0 | 6 8 | 5 10 | 5 8 | 5 6 | 5 6 | 5 8 | 4 0 | 9 6* | 10 10 / 11 0* | 9 0 |
| | | **Rajshahi** | | | | | | | | | | | | | | | |
| Rajshahi | 25 | Rampur-Boalia | 7 4 | 7 0 | 6 0 | 7 8 | 7 8 | 6 12 | 5 0 | 5 4 | 6 0 | 7 4 | 7 4 | 5 4 | 9 0 / 9 0 | 9 4 / 9 0 | 8 4 |
| | 26 | Nator | 7 2 | 7 2 | 6 0 | 7 8 | 7 8 | 6 12 | 4 14 | 4 4 | 5 4 | 6 0 | 6 0 | 4 0 | 8 11† | 8 11† | 9 12 |
| | 27 | Dinajpur—Railway Bazar Hât. | 8 8 | 8 8 | 7 3 | 9 0 | 9 0 | 7 12 | 5 2 | 5 2 | 4 12 | 5 6 | 5 6 | 3 9 | 8 0† | 8 0† | 9 0 |
| | 28 | Jalpaiguri—Sadar | 7 0 | 7 0 | 7 8 | 8 0 | 8 0 | 7 12 | 5 8 | 5 8 | 5 8 | 5 8 | 5 8 | 4 0 | 9 0† | 9 0 / 8 8 | 9 0 |

* Karkach. (a) Not available. (a) Not quoted.

\# 8 —The price of karkach and Liverpool salt tally with each other in marts marked †

***Prices-current (retail) of food-grains, salt, etc., in the districts of Bengal for the first-half of June 1923.***

| Division | Number | Districts and Marts | Common rice. Average. Present return | Common rice. Average. Next preceding return | Common rice. Average. Corresponding return of last year. | Common rice. Cheapest. Present return | Common rice. Cheapest. Next preceding return | Common rice. Cheapest. Corresponding return of last year | Kalai dal (*Phaseolus radiatus*). Present return | Kalai dal. Next preceding return. | Kalai dal. Corresponding return of last year. | Arhar dal or Tur or Cajan pea (*Cajanus indicus*). Present return | Arhar dal. Next preceding return. | Arhar dal. Corresponding return of last year. | Salt. Present return | Salt. Next preceding return. | Salt. Corresponding return of last year |
|---|---|---|---|---|---|---|---|---|---|---|---|---|---|---|---|---|---|
| | | | QUANTITY PER RUPEE IN SEERS OF EIGHTY TOLAS. | | | | | | | | | | | | | | |
| | | | S. Ch. | S. Ch. | S. Ch. | S. Ch. | S. Ch. | S. Ch. | S. Ch. | S. Ch. | S. Ch. | S. Ch. | S. Ch. | S. Ch. | S. Ch. | S. Ch. | S. Ch. |
| | | **Darjeeling.** | | | | | | | | | | | | | | | |
| Rajshahi | 29 | Sadar | 6 4 | 6 4 | 5 0 | 6 8 | 6 8 | 6 8 | 4 0 | 4 0 | 2 12 | 3 4 | 3 0 | 3 4 | 7 0<br>8 0* | 7 0<br>8 0* | 6 12 |
| | 30 | Siliguri | 7 0 | 7 0 | 6 0 | 8 0 | 8 0 | 7 0 | 4 0 | 4 0 | 4 0 | 4 0 | 4 0 | 4 0 | 8 0† | 8 0† | 8 0 |
| | | **Rangpur** | | | | | | | | | | | | | | | |
| | 31 | Sadar | 6 8 | 6 8 | 7 0 | 7 0 | 7 8 | 8 0 | 6 8 | 6 8 | 4 8 | 4 8 | 4 8 | 4 8 | 8 0*<br>7 0 | 8 0*<br>7 0 | 6 0 |
| | 32 | Nilphamari | 7 8 | 7 0 | 8 8 | (a) | (a) | (a) | 4 8 | 4 8 | 4 0 | 4 8 | 5 0 | 4 0 | 8 0*<br>8 0 | 6 0<br>8 0 | 10 0 |
| | 33 | Bogra—Sadar | 7 14 | 8 4 | 7 2 | 8 4 | 8 10 | 7 8 | 4 0 | 4 0 | 4 0 | 4 8 | 4 8 | 4 0 | 8 4<br>9 0 | 8 4<br>9 12 | 8 8 |
| | | **Pabna.** | | | | | | | | | | | | | | | |
| | 34 | Sadar | 7 4 | 7 4 | 5 12 | 7 8 | 7 8 | 6 2 | 5 4 | 5 4 | 3 8 | 4 0 | 4 0 | 5 8 | 7 0<br>8 0* | 7 0†<br>8 0* | 11 0* |
| | 35 | Sirajganj | 6 12 | 7 0 | 6 4 | 7 8 | 7 10 | 6 8 | 8 0 | 6 0 | 4 4 | 4 12 | 4 12 | 6 0 | 8 0† | 8 0† | 9 0 |
| | | **Malda** | | | | | | | | | | | | | | | |
| | 36 | Sadar | 7 8 | 7 8 | 6 0 | 8 0 | 8 4 | 6 4 | 4 8 | 5 0 | 4 8 | 5 0 | 6 0 | 6 8 | 8 0<br>9 0* | 8 0<br>8 8* | 8 0 |
| | 37 | Balia—Nawabganj | 8 0 | 8 0 | 6 4 | 8 4 | 8 8 | 6 8 | 5 0 | 5 8 | 5 0 | 5 8 | 6 8 | 7 0 | 8 0<br>9 0* | 8 0<br>8 8 | 8 0* |
| | | **Dacca** | | | | | | | | | | | | | | | |
| Dacca | 38 | Sadar | 7 8 | 7 8 | 5 12 | 8 4 | 8 4 | 7 0 | 8 0 | 8 0 | 4 0 | 6 0 | 6 0 | 8 0 | 9 0 | 9 0 | 10 0 |
| | 39 | Mirkadim | 7 0 | 7 0 | 5 12 | 8 0 | 8 0 | 6 0 | (a) | (a) | (a) | (a) | (a) | (a) | 12 0<br>10 10* | 12 0<br>10 12 | 13 0 |
| | | **Mymensingh.** | | | | | | | | | | | | | | | |
| | 40 | Nasirabad | 7 12 | 7 12 | 6 0 | 8 0 | 8 0 | 6 8 | 9 0 | 8 8 | 4 4 | 6 0 | 6 4 | 2 4 | 9 8*<br>10 0† | 8 0*<br>8 8 | 11 0 |
| | 41 | Netrakona | 7 0 | 7 0 | 6 3 | 8 0 | 8 0 | 6 8 | 5 0 | 5 0 | 4 0 | 4 0 | 4 0 | 4 0 | 9 1<br>8 0 | 9 11<br>8 0* | 11 4 |
| | | **Faridpur** | | | | | | | | | | | | | | | |
| | 42 | Sadar | 8 0 | 8 0 | 6 4 | 8 12 | 8 12 | 6 10 | 5 8 | 5 8 | 5 0 | 6 8 | 6 8 | 8 0 | 8 8† | 8 8† | 12 0* |
| | 43 | Rajbari | 7 4 | 7 4 | 6 0 | 7 8 | 7 8 | 6 4 | 6 8 | 6 8 | 4 0 | 5 4 | 5 0 | 5 4 | 12 0*<br>11 0 | 12 0*<br>11 0 | 10 0 |
| | | **Bakarganj.** | | | | | | | | | | | | | | | |
| | 44 | Barisal | 7 8 | 7 8 | 5 7 | 8 4 | 8 0 | 6 0 | 9 8 | 9 12 | 3 8 | 5 4 | 5 4 | 6 6 | 8 4<br>9 4* | 8 4<br>9 4* | 8* 0 |
| | 45 | Pirojpur | 7 8 | 7 8 | 5 15 | 8 0 | 8 0 | 6 6 | 6 8 | 6 8 | (a) | 4 0 | 4 0 | 6 0 | 8 0† | 8 0† | 8 0 |
| | | **Tippera** | | | | | | | | | | | | | | | |
| Chittagong | 46 | Comilla | 7 0 | 7 4 | 5 4 | 7 10 | 8 0 | 5 12 | (a) | (a) | 3 8 | 4 8 | 4 8 | (a) | 8 0† | 8 0† | 10 9 |
| | 47 | Chandpur | 7 8 | 7 12 | 5 4 | 8 0 | 8 0 | 5 12 | 9 0 | 8 4 | 4 0 | 5 8 | 5 8 | 5 12 | 11 0<br>10 8* | 11 0<br>10 8* | 10 11 |
| | | **Noakhali** | | | | | | | | | | | | | | | |
| | 48 | Kalitara Hât | 6 8 | 6 8 | 5 8 | 7 0 | 7 0 | 6 0 | 8 0 | 8 0 | 3 0 | 5 0 | 4 8 | 8 0 | 8 0† | 8 0† | 10 8 |
| | 49 | Fani Hât | 7 0 | 7 0 | 6 9 | 7 8 | 7 8 | 6 15 | 4 0 | 4 0 | (c) | (c) | (c) | 3 4 | 9 7<br>8 0* | 9 7<br>6 10† | 10 1 |
| | | **Chittagong.** | | | | | | | | | | | | | | | |
| | 50 | Sadar | 6 8 | 6 12 | 5 6 | 7 8 | 7 8 | (a) | 5 4 | 5 4 | 3 10 | 5 1 | 5 4 | 4 8 | 11 0<br>8 0 | 11 0<br>8 0* | 13 0<br>9 0 |
| | 51 | Cox's Bazar | 7 0 | 7 0 | 6 9 | (a) | (a) | (a) | 4 0 | 4 0 | 3 8 | 4 0 | 4 0 | 4 0 | 8 0<br>6 0* | 8 0<br>6 0* | 9 0 |
| | 52 | Chittagong Hill Tracts—Rangamati | (a) | (a) | 5 0 | 7 0 | 8 0 | 6 8 | 4 0 | 4 0 | 3 4 | 3 12 | 3 12 | 3 12 | 9 0<br>6 8* | 9 0<br>6 8 | 11 0 |

(a) Not available. (c) Normal. (a) Not reported. * Karkach.

*N B.*—The prices of karkatch and Liverpool salt tally with each other in marts marked †.

J. C. ROY, for *Director of Agriculture, Bengal.*

DACCA, *the 25th June 1923.*

**Vital statistics of Towns with a population of 50,000 and over of the Bengal Presidency for the week ending Saturday, the 23rd June 1923.**

| District | No. | Towns | Population under registration according to census of 1921. | | | Births registered. | | Deaths registered. | | | | | | | | | | | | | | | | | | | | | | | | |
|---|---|---|---|---|---|---|---|---|---|---|---|---|---|---|---|---|---|---|---|---|---|---|---|---|---|---|---|---|---|---|---|---|
| | | | Male | Female | Total. | Number registered (excluding still-births) | Still-born number registered | Cholera | Small pox. | Plague | Malaria | Enteric fever | Measles | Relapsing fever | Kala azar | Other fevers | Dysentery | Diarrhoea. | Influenza. | Pneumonia. | Phthisis. | Other respiratory diseases. | Injuries including suicide. | Death from child-birth. | Other causes | Total of all causes. Male | Total of all causes. Female | Total of all causes. Total | Total of corresponding week of the previous year. Male. | Total of corresponding week of the previous year. Female | Total of corresponding week of the previous year. Total. |
| Calcutta | 1 | Calcutta | 617 590 | 290,261 | 907,851 | 225 | 21 | 27 | 1 | | 10 | 3 | 2 | | 7 | 22 | 20 | 4 | 2 | 56 | 33 | 42 | 7 | | 130 | 210 | 156 | 366 | 219 | 164 | 383 |
| Burdwan | 2 | Asansol Mining Settlement | 176,814 | 152,539 | 329 358 | 213 | 1 | | | | 6 | | | 1 | | 0 | 6 | | | 10 | | 10 | 3 | 1 | 90 | 82 | 55 | 137 | 44 | 30 | 74 |
| Howrah | 3 | Howrah | 128 472 | 66,829 | 195 301 | 40 | 4 | 4 | | | 3 | 2 | 1 | | | 14 | 3 | 8 | | 9 | 4 | 5 | 1 | 1 | 17 | 40 | 32 | 72 | 30 | 39 | 69 |
| Dacca | 4 | Dacca | 67,333 | 52,117 | 119,450 | 47 | 3 | 1 | | | 2 | 1 | | | 2 | 14 | 3 | 4 | | 5 | 1 | | | | 15 | 28 | 20 | 48 | 23 | 19 | 42 |
| Parganas | 5 | Maniktala | 40,996 | 26,376 | 67 372 | 17 | 2 | | | | | | | | | 2 | 3 | 3 | | 4 | 5 | 14 | 1 | | 13 | 32 | 27 | 59 | 15 | 11 | 26 |
| | 6 | Bhatpara | 45 723 | 19,886 | 65,609 | 3 | | | | | | | | | | 3 | | | | | | | | | | | 4 | 4 | 5 | 3 | 8 |
| | 7 | Cossipur-Chitpur | 36 289 | 20,185 | 56 474 | 5 | | | | | 4 | | | | | 2 | | | | 2 | 4 | 2 | | | 5 | 13 | 6 | 19 | 8 | 7 | 15 |
| | 8 | Titagarh | 36,533 | 15,918 | 52,451 | 12 | 3 | 1 | 2 | | | | | | | 8 | | 2 | | | | | | | | 7 | 6 | 13 | 1 | 1 | 2 |

CHAS. A. BENTLEY, *Director of Public Health, Bengal.*

CALCUTTA, *the 30th June 1923.*

## DAILY RAINFALL RECORDED IN BENGAL

| Division | District | Station | 1 | 2 | 3 | 4 | 5 | 6 | 7 | 8 | 9 | 10 | 11 | 12 | 13 | 14 | 15 | 16 | 17 | 18 | 19 | 20 |
|---|---|---|---|---|---|---|---|---|---|---|---|---|---|---|---|---|---|---|---|---|---|---|
| Presidency | 24 Parganas | Saugar Island | | | | | 0.16 | | | | | | 0.04 | 0.16 | 0.02 | | | | | | | |
| | | Diamond Harbour. | | | | | | | | | | | | | | | | | 1.44 | | 0.16 | 0.44 |
| | | Budge-Budge | | | 0.02 | | | | | | | | 0.19 | | | | | | | 0.20 | 0.01 | |
| | | Canning Town | | | | | | | | | | | | | | | | | | | | |
| | | Alipore | | | | | | | | | | | 0.35 | | | | | | | 0.03 | | |
| | | Barrackpore | | | | | | | | | | | 0.10 | 0.22 | | | | | 0.40 | 0.50 | 0.20 | |
| | | Dum-Dum | | 0.73 | | | | 0.30 | | | 0.90 | | 0.22 | | | | | | | | | |
| | | Barasat | | | | | | | | | | | 0.15 | 0.06 | | | | | | 0.25 | | |
| | | Basirhat | | | 0.03 | | | | | | | | 0.12 | | | | 0.20 | | | 0.08 | | 0.06 |
| | | Gosaba | | | | 0.20 | | | | | | 0.25 | 0.03 | | | 0.74 | | | | | | |
| | Nadia | Ranaghat | | 0.08 | 0.04 | | | | | | | | 0.22 | 0.13 | | | 0.70 | | 0.05 | 0.50 | 0.19 | 1.68 |
| | | Krishnagar | | | | | | | | | | 0.26 | | | | | 0.58 | 0.60 | | 0.44 | 1.11 | |
| | | Chuadanga | | | | 0.15 | 0.25 | | | | | 2.07 | 0.05 | | | | 0.21 | 1.50 | 0.12 | 0.50 | 0.01 | |
| | | Meherpur | | | | | 0.05 | | | | | 0.85 | | | | 0.10 | 0.40 | 0.42 | 0.71 | 0.38 | | 0.04 |
| | | Kushtia | | | 0.05 | | | | | | 0.13 | 0.07 | | | | 0.32 | 0.12 | 0.14 | 0.09 | 0.01 | | |
| | | Haringhata | | | | | | | | | | | 0.16 | 0.03 | | | | | | | | |
| | Murshidabad | Kandi | | | | | | | | | | 0.20 | | | | | | 0.14 | 0.22 | 0.70 | | |
| | | Berhampore | | | | | | | | | | 0.13 | | | | | | | 0.24 | 1.60 | 1.78 | 0.80 |
| | | Lalbagh | | | | 0.43 | | | | | | 0.91 | | | | | | 0.20 | 0.56 | 0.49 | 0.05 | 0.92 |
| | | Azimganj | | | | 0.01 | 0.03 | | | | | 0.59 | | | | | 0.41 | 0.90 | 0.38 | | 0.78 | 0.10 |
| | | Jangipur | | | | | | | | | 0.12 | | | | | | 0.29 | 0.92 | 0.13 | | 0.49 | 0.10 |
| | | Lalgola | | | | | | | | | | | | | | | 0.17 | 0.48 | 0.50 | | 0.76 | |
| | | Akriganj | | | | | | | | | | 6.09 | | | | | | 0.75 | 0.13 | | | |
| | | Patkabari | | | | | | | | | | | | | | | 1.07 | 0.47 | 0.98 | 0.30 | | 0.36 |
| | | Dumkal | | | 0.11 | | | | | | | 0.72 | | | | | | 0.37 | 0.96 | 0.17 | 0.11 | |
| | | Kallyanganj (*Ishanpur*) | | | | | | | | | | 0.11 | | | | | 0.05 | | 0.16 | 2.25 | | 1.11 |
| | Jessore | Narail | | | | | | | | | 0.40 | 0.17 | | | | 1.15 | 0.54 | 0.28 | 0.42 | 0.06 | | 0.[illegible] |
| | | Jessore | | | | | 1.04 | | | | | 0.19 | 0.25 | | | | 1.07 | 0.12 | 0.23 | 0.70 | 1.12 | |
| | | Jhenida | | | | | | | | 0.05 | 0.56 | 0.20 | | | | 0.85 | 1.35 | 0.08 | 0.55 | | | |
| | | Magura | | | | | 0.10 | | | | | 0.20 | 0.30 | | | | 0.30 | 1.29 | 0.30 | 0.50 | | |
| | | Bongaon | | | | | | | | | | | | | | | 0.91 | | 0.10 | 0.51 | 1.20 | 0.75 |
| | Khulna | Satkhira | | | | | 0.03 | | | | | | 0.70 | | | | 0.19 | | | 0.04 | | 0.53 |
| | | Bagerhat | | | | | 0.11 | | | | | 0.17 | 0.16 | | | | 0.59 | | | | 0.22 | 1.11 |
| | | Khulna | | | | | 0.02 | 0.08 | | | | 0.18 | 0.24 | | | | 1.19 | 0.11 | 0.12 | | 1.01 | 0.12 |
| | | Kaliganj | | | | | | | | | | | 0.29 | | | | | | | 0.10 | 0.05 | 0.22 |
| | | Nakipur | | | | | | | | | | | 0.72 | | | | | | | | | 1.20 |
| | | Dumuria | | | | | | | | | | | 0.46 | | | | 0.52 | 0.10 | | 0.09 | 0.71 | 0.78 |
| | | Rampal | | | 0.07 | | | | | | | | 0.86 | | | | 0.58 | | 0.16 | | | |
| | | Kalaroa | | | | | | | | | | | 0.49 | | | | 0.65 | 0.24 | 0.15 | 0.08 | 0.10 | 1.60 |
| | | Paikgachha | | | | | 0.12 | | | 0.23 | 0.14 | | 0.16 | 0.09 | | 0.11 | 0.17 | 0.05 | | 0.15 | 0.19 | 0.96 |
| | | Molhahat | | | | | | | 0.2 | | | 0.14 | 0.21 | | | | 0.34 | 0.19 | 0.11 | 0.17 | 0.43 | 0.34 |
| | | Mongalganj | | | | | | | 1.25 | 0.50 | 0.14 | | | 0.22 | 0.14 | | 0.46 | 0.17 | 0.10 | | 1.35 | 0.75 |
| | | Tala | | | | | | | | | | | 0.15 | | | | | | | | | |
| Burdwan | Burdwan | Kalna | | | 1.02 | | | | | | | | 0.45 | 0.02 | | | 1.09 | | 0.30 | 0.01 | | 0.74 |
| | | Burdwan | | | | | | | | | | | 0.35 | 0.67 | | | 0.29 | | 0.12 | 0.61 | 0.01 | |
| | | Katwa | 0.05 | | | | | | | | | | | | | | 0.50 | 0.10 | 0.05 | 1.15 | 0.65 | 0.1[illegible] |
| | | Asansol | | | | | | | | | | | 0.02 | | | | | | | 0.07 | | |
| | | Mankur | | | | | | | | | | | 0.15 | | | | | | | | | |
| | | Mangalkot | | | | | | | | | | 0.05 | | | | | | | 0.30 | 0.65 | | 0.35 |
| | | Royna* | | | | | | | | | | | | | | | | | | | | |
| | | Monteswar* | | | | | | | | | | | | | | | | | | | | |
| | Birbhum | Suri | | | | | | | | | | | 0.15 | | | | 0.10 | | | 0.59 | 0.81 | |
| | | Hetampur | | | | | | | | | | | | | | | | | | | | |
| | | Rampurhat | | | | | | | | | | | | | 0.15 | | | | | 0.25 | 0.15 | |
| | | Bolpur | | | | | | | | | | | | | | | | | | 2.15 | | 0.72 |
| | | Murarai* | | | | | | | | | | | | | | | | | | | | |
| | | Labpur | | | | 2.45 | | | | | | | 0.29 | | 0.31 | | 0.17 | | | 0.37 | 0.16 | |
| | Bankura | Bankura | | | | | | | | | | | | 0.12 | | | | | | 0.08 | 0.35 | |
| | | Vishnupur | | | | | | | | | | | 0.48 | 0.10 | 0.04 | | | | | 0.67 | | |
| | | Maliara | | | | | | | | | | 0.20 | | | | | | | | 0.24 | | |
| | | Khatra | | | | | | | | | | | 0.11 | 0.30 | 0.17 | | | | | 0.28 | | |
| | | Indas | | | | | | | | | | | | 0.24 | | | | | | 0.93 | 0.37 | |
| | | Kotalpur | | | | | | | | | | | 0.53 | 0.28 | | | | | 0.72 | | | |
| | | Onda* | | | | | | | | | | | | | | | | | | | | |
| | | Gangajalghati | | | | | | | | | | | 0.83 | 0.02 | | | | | | 0.63 | 0.77 | |
| | | Raipur* | | | | | | | | | | | | | | | | | | | | |
| | | Sonamukhi | | | | | | | | | | | 0.64 | | | | | | | 0.42 | | |
| | | Taldangra | | | | | | | | | | 0.71 | 0.81 | | | | | | 0.45 | | | 0.71 |
| | | Saranga | | | | | | | | | | 0.47 | 2.00 | | 0.30 | | | | | | | 1.53 |
| | | Indpur | | | | | 0.34 | 0.90 | | | | | | | | | | | | 0.28 | | |
| | | Arhra | | | | | | | | | | 0.25 | 0.03 | | | | | | | | | 0.20 |
| | | Barjora | | | | | | | | | | 0.24 | | | | | | | 0.18 | | | 0.64 |
| | | Simlapal | | | | | | | | | | 2.01 | 0.46 | | | | | | | 0.95 | | 2.20 |
| | | Mejia | | | | | | | | | | | | 0.11 | | | | | | 0.60 | 0.22 | |
| | | Siromanipur | | | | | | | | | | | 0.44 | | | | | | | | | 1.63 |
| | | Palasdanga* | | | | | | | | | | | | | | | | | | | | |
| | | Onabra | | | | | | | | | | | | | | | | | | | | 0.11 |
| | | Ranibandh | | | | | | | | | | | 0.47 | 0.34 | 0.75 | | | | | 0.35 | | 0.68 |
| | | Saltora | | | | | | | | | | 0.12 | | | | | | | | 0.32 | 0.30 | |
| | | Joypur | | | | | | | | | | | 0.80 | 0.16 | | | | | | 0.76 | | |
| | | Ambikanagar* | | | | | | | | | | | | | | | | | | | | |
| | | Jairampur (*Radhanagar*). | | | | | | | | | | | 0.52 | 0.13 | | | | | 0.61 | | | 1.00 |

* Returns not received.

**FOR THE MONTH OF MAY 1923.**

| 21 | 22 | 23 | 24 | 25 | 26 | 27 | 28 | 29 | 30 | 31 | Number of rainy days. | Average number of rainy days | Total rainfall for the month | Normal rainfall for the month. | Heaviest rainfall during the month. | Total rainfall from 1st March up to 31st May 1923 | Normal rainfall from 1st March up to 31st May 1923 | Station | DISTRICT. | DIVISION. |
|---|---|---|---|---|---|---|---|---|---|---|---|---|---|---|---|---|---|---|---|---|
| 1·76 | ... | . | . | 0 16 | | | | . | . | | 4 | 5·3 | 2 30 | 4·45 | 1 76 | 2 03 | 7 06 | Saugor Island | 24 Parganas | PRESIDENCY |
| .. | | | | . | | | | | | | 3 | 7 0 | 2 04 | 5 30 | 1 44 | 2 79 | 8·57 | Diamond Harbour | | |
| 0 57 | | | . | 0 28 | | [0 02 | | | | | 4 | 7 3 | 1 39 | 5 65 | 0 57 | 2 24 | 9·39 | Budge-Budge. | | |
| . | | . | | | . | | | | | | Nil | 7·3 | Nil | 5 82 | Nil | 1 60 | 9 51 | Canning Town | | |
| 0 60 | . | . | | 0·04 | | | | | | | 2 | 7·2 | 1 04 | 5 77 | 0 60 | 2·99 | 8 98 | Alipore | | |
| | | 0 20 | 0 20 | . | | | | | | | 7 | 7 2 | 1 82 | 5 40 | 0 50 | 6·38 | 9 09 | Barrackpore | | |
| | 0 30 | . | | | | | | | | | 5 | 7 5 | 2 15 | 5 78 | 0 90 | 3 58 | 9 30 | Dum Dum | | |
| | | | 0 15 | 0 19 | | | | | | | 4 | 7 6 | 0 90 | 5 60 | 0·25 | 3 79 | 9 18 | Baraset | | |
| | | | ... | 0 30 | 0 41 | | | | | | 4 | 7 6 | 1 31 | 6 02 | 0·41 | 2 97 | 10 07 | Basirhat. | | |
| | | . | | . | | | | | | . | 3 | (a) | 1 28 | (a) | 0·74 | | (a) | Gosaba. | | |
| . | .. | 0·07 | | | | | . | | | 0 05 | 6 | 7 0 | 3 71 | 6 36 | 1 68 | 5·86 | 10·78 | Ranaghat | Nadia | |
| 0·05 | | .. | | | | | | | | | 5 | 7·8 | 3 04 | 6 51 | 0 58 | 3 21 | 10 42 | Krishnagar | | |
| . | .. | 0 05 | | . | 0 10 | . | | | 0 87 | 0 61 | 10 | 8 7 | 6 34 | 7 53 | 2 07 | 6 72 | 12 17 | Chuadanga | | |
| | | | | 0·05 | | | | 0 90 | 0 61 | | 8 | 8 3 | 4 51 | 6·12 | 0 90 | 6 32 | 10 98 | Meherpur | | |
| | . | | | 0 87 | | | 0 09 | 0·14 | 0 16 | | 8 | [illegible] | 2 81 | 7 90 | 0 87 | 9 37 | 12·56 | Kushtia | | |
| | . | . | 0 11 | 0 19 | . | | | | . | 0 01 | 3 | (a) | 0 53 | 4 93 | 0 19 | 1 57 | 8 80 | Haringhata. | | |
| 0 05 | | 0 58 | 0 03 | | | | | | 0·30 | 0 30 | 8 | 6 9 | 3 12 | 4·79 | 0 70 | 4 13 | 7 90 | Kandi | Murshidabad | |
| 0 15 | | 0 17 | 0 80 | | 0 22 | | | | | 0 57 | 10 | 7 4 | 6·76 | 5·44 | 1 78 | 7 16 | 8 03 | Berhampore | | |
| 0·06 | | 0 31 | 0 12 | | | | | | | 0 02 | 8 | 7 0 | 3 94 | 5 69 | 0 94 | 3 61 | 8 25 | Lalbagh | | |
| | 0 83 | 0 08 | | | 0 23 | | | 0 11 | 0 12 | | 10 | 7 0 | 4 62 | 5 31 | 0 83 | 5 48 | 7 94 | Azimganj | | |
| | 0 12 | 0 38 | | | | | | 0 09 | | | 8 | 6 7 | 2 90 | 4 81 | 0 92 | 4 64 | 6·97 | Jangipur | | |
| . | | | | | | | | 0 78 | .. | | 5 | 7 1 | 2 89 | 5 17 | 0 78 | 3 89 | 7·55 | Lalgola. | | |
| | | | | | | 1·00 | | | 1·90 | 0 43 | 5 | 7 7 | 3 31 | 6 20 | 1 00 | 4 81 | 8 79 | Akriganj | | |
| | | | | | | | | 0 76 | 0 66 | | 7 | 6·8 | 4 60 | 5 56 | 1 07 | | 8 35 | Patkabari. | | |
| | . | | 0 10 | | | | | | 0 92 | 0 31 | 9 | 7 4 | 3 79 | 5·26 | 0 96 | 6 77 | 8 96 | Dumkal | | |
| 0 23 | | 0·07 | 0 22 | | 0 07 | | | 0 21 | 0 27 | | 7 | 5 2 | 1 69 | 4 62 | 2 25 | 2 50 | 7 31 | Kaliyanganj (Ishanpur) | | |
| | | | | 0 31 | | | | 0 18 | 0 13 | | 10 | 9 8 | 3 89 | 7 21 | 1 15 | 6 60 | 12 84 | Narail | Jessore | |
| 2 24 | | | | | | | | | 0 62 | 0 03 | 9 | 9 6 | 6 92 | 8 28 | 1 07 | 11 74 | 13 98 | Jessore | | |
| | | 0·11 | | 0 56 | | | | 1 30 | 0 40 | | 10 | 9 1 | 6 97 | 7 33 | 1 55 | 7 70 | 12·66 | Jhenida | | |
| 0 30 | | | | | 0 10 | | | | | 0 35 | 10 | 9 9 | 4 34 | 8 38 | 1 29 | 9 28 | 14 46 | Magura | | |
| 1 43 | | | | | | | | | | 0 50 | 7 | 7 4 | 6 44 | 6 08 | 1 43 | 8 28 | 10 96 | Bongaon | | |
| | | | | 0 09 | 0 21 | | | | 0 01 | 0·01 | 4 | 8 2 | 1·91 | 6 87 | 0 76 | 3 57 | 12 00 | Satkhira | Khulna | |
| 2 32 | | | | | | | | | | | 7 | 5 6 | 4 64 | 7 16 | 2 72 | 6 43 | 12 31 | Bagerhat | | |
| 4 35 | | | | | 0 12 | .. | | | 0 11 | 0 43 | 11 | 8 9 | 7 28 | 7 03 | 3 35 | 8 88 | 12 28 | Khulna | | |
| | | | | | 0 04 | | | | 0 03 | | 8 | 6 7 | 0 73 | 7 58 | 0 29 | | 12 80 | Kaliganj. | | |
| 0 92 | . | | | | | | | | | | 3 | 6 7 | 2 91 | 5·77 | 1 29 | 4 15 | 9 56 | Nakipur | | |
| 1 90 | | | | | | | | | | 0 53 | 7 | 8 8 | 5 09 | 8 09 | 1 90 | 8 88 | 13 38 | Dumuria | | |
| 2 04 | | | | | | | | | | | 5 | 8 6 | 4 08 | 7 51 | 2 04 | 6 45 | 12 52 | Rampal | | |
| | | | .. | 0 13 | 0 35 | | | | 0 16 | 0·14 | 10 | 9·5 | 4 09 | 8 82 | 1·60 | 5 81 | 14 81 | Kalaroa. | | |
| 0 28 | . | | . | | 2 84 | | | . | | | 11 | 8·0 | 5 69 | 7 61 | 2 84 | 6 74 | 12 98 | Paikgachha | | |
| 1 23 | | | | 0 08 | 0 09 | | | | 0 15 | | 11 | 8 8 | 4 98 | 8 85 | 1 23 | 6 68 | 17 31 | Mollahat. | | |
| | | | | 1 50 | | 0 25 | | | | | 12 | 9 5 | 6 69 | 9 52 | 1 50 | 8 09 | 16 26 | Morelganj. | | |
| | | | 1 00 | 4·62 | | | | | | | 3 | 8 0 | 5 77 | 7 92 | 4 62 | 5 83 | 13 58 | Fula | | |
| | | 0 30 | | | 1·15 | | | | | 0 25 | 8 | 7 4 | 5 93 | 5 82 | 1·15 | 8·45 | 9 95 | Kalna | Burdwan | BURDWAN |
| 3·02 | | 0 31 | 0·12 | | 0 59 | | | | | 0 01 | 9 | 7 3 | 6 31 | 5 86 | 3·02 | 7·00 | 9 69 | Burdwan | | |
| 1·06 | | 0 02 | | | 0 34 | | | | | | 7 | 7 3 | 4 02 | 5 43 | 1 15 | 5 37 | 8 45 | Katwa. | | |
| 0 32 | | 0 03 | | | | . | | | | | 1 | 5 4 | 0 44 | 1 82 | 0·32 | 1 15 | 6 34 | Asansol. | | |
| 3 41 | | | | | | | | | | | 2 | 5 3 | 3 56 | 4 73 | 3 41 | | 7 43 | Mankar | | |
| | | 3 20 | | | | | | | 0 06 | | 4 | 4 3 | 1 61 | 4 72 | 0 05 | 4 21 | 8·15 | Mangalkot | | |
| | | | | | | | | | | | | (a) | | (a) | | | (a) | Raina | | |
| | | | | | | | | | | | | (a) | | (a) | | | (a) | Monteswar | | |
| 2 88 | | 0 04 | | | 0 26 | | | | | . | 6 | 5 9 | 4 83 | 3 75 | 2 88 | 5 24 | 5 88 | Suri | Birbhum | |
| | | | | | | | | | | | | | | 3 78 | | | 5 76 | Hetampur. | | |
| 2·30 | . | 0 20 | . | | | | | | 0 10 | 0 20 | 7 | 6 2 | 4 26 | 4 35 | 2 30 | 5 35 | 6 66 | Rampurhat | | |
| 1·76 | | . | . | | | | | | | | 3 | 5·4 | 4 23 | 4·04 | 2 15 | 4 23 | 6·04 | Bolpur | | |
| | | | | | | | | | | | | 6 1 | | 5 26 | | | 7·26 | Murarai | | |
| 0 45 | | 0·16 | .. | | | | | | | | 8 | 6 5 | 4 19 | 4 82 | 2 45 | 5 72 | 7 43 | Labpur | | |
| 1·52 | | 1 10 | . | 0 76 | 0 01 | | | | | | 5 | 6·0 | 3 94 | 4 06 | 1 52 | 6·07 | 6 65 | Bankura | Bankura | |
| 1 76 | . | ... | .. | 0 11 | | | | | . | 0 07 | 5 | 6 9 | 4 23 | 4 67 | 1 76 | 4 60 | 7 56 | Vishnupur | | |
| 0 37 | .. | . | . | | | | | | | | 3 | 5 9 | 0 81 | 3 86 | 0 37 | 1 14 | 5 82 | Mallara. | | |
| 0 55 | | | 0 22 | 0 17 | | | | | . | | 7 | 5 6 | 2 10 | 3 77 | 0 85 | 4 20 | 6 23 | Khatra. | | |
| 1 51 | .. | 0 13 | 0 06 | 0 23 | | | | . | | | 7 | 6 7 | 4 36 | 5 42 | 1 51 | 4 56 | 8 29 | Indas | | |
| 1 82 | . | . | | 0 36 | | | | | | | 5 | 6·1 | 3 1 | 5 16 | 1 82 | | 8 45 | Kotalpur. | | |
| | | | | | | | | | | | | 5 3 | | 3 15 | | | 5 21 | Onda | | |
| 0 74 | . | 0 14 | . | 0 19 | | | | | | | 6 | 5 1 | 3 82 | 3 54 | 0 83 | | 5 77 | Gangajalghati. | | |
| | | | | | | | | | | | | 6 8 | | 5 18 | | | 8 24 | Raipur | | |
| 1 80 | . | | 0·55 | 0·08 | .. | | | .. | | | 4 | 5 5 | 3 49 | 4 65 | 1 80 | 3 73 | 7·21 | Sonamukhi | | |
| | .. | . | . | | .. | . | | | . | 0 70 | 5 | (a) | 3 18 | (a) | 0 71 | 3·65 | (a) | Taldangra | | |
| . | . | . | 0·62 | | | | | | | | 5 | (a) | 4 95 | (a) | 2·00 | | (a) | Saranga. | | |
| 1 90 | | | . | 0 55 | | | | | | | 5 | (a) | 4 06 | (a) | 1 90 | 4 11 | (a) | Indpur | | |
| .. | 0 43 | . | .. | | | | | | 0·04 | 0 50 | 4 | (a) | 1 50 | (a) | 0 50 | 1 17 | (a) | Arbra | | |
| ... | . | .. | .. | | .. | . | | . | . | | 4 | (a) | 1 83 | (a) | 0 77 | | (a) | Barjora. | | |
| .. | | ... | ... | . | . | . | | | | | 4 | (a) | 5·61 | (a) | 2 30 | 6 28 | (a) | Simlapal | | |
| 0·21 | .. | | 0·04 | .. | | | | | | | 4 | (a) | 1 19 | (a) | 0 80 | 2 48 | (a) | Mejia. | | |
| ... | 0·64 | . | . | . | . | . | | | | | 2 | (a) | 2 07 | (a) | 1 63 | | (a) | Sirsunaipur | | |
| | | | | | | | | | | | | (a) | | (a) | | | (a) | Palasdanga | | |
| ... | ... | ... | .. | .. | 0·08 | .. | ... | | | .. | 2 | (a) | 1·82 | (a) | 0 64 | | (a) | Chatna | | |
| ... | .. | .. | . | .. | 0 11 | . | . | ... | | | 6 | (a) | 2 28 | (a) | 0·56 | 3·48 | (a) | Ranibandh | | |
| 0·50 | . | 0·45 | .. | 0 24 | . | | | . | | 0 17 | 7 | (a) | 2 19 | (a) | 0 59 | 2·19 | (a) | Saltora. | | |
| 1·26 | ... | ... | .. | 0·27 | .. | | | | | | 5 | (a) | 3 25 | (a) | 1 26 | | (a) | Joypur | | |
| | | | | | | | | | | | | (a) | | (a) | | | (a) | Ambikanagar | | |
| ... | . | .. | 0·02 | . | . | | . | ... | | | 4 | (a) | 2·56 | (a) | 1·00 | | (a) | Jairampur. (Radhanagar) | | |

(a) Not ascertained.

## DAILY RAINFALL RECORDED IN BENGAL

| Division | District. | Station | 1 | 2 | 3 | 4 | 5 | 6 | 7 | 8 | 9 | 10 | 11 | 12 | 13 | 14 | 15 | 16 | 17 | 18 | 19 | 20 |
|---|---|---|---|---|---|---|---|---|---|---|---|---|---|---|---|---|---|---|---|---|---|---|
| BURDWAN—*contd.* | Midnapore | Contai | | | | | | | | | | | | 0·27 | 1·14 | | | | | | | |
| | | Tamluk | | | | | | | | | | | | | | | | | 1·10 | 0·90 | | 2·70 |
| | | Midnapore | | | | | | | | | | | 0·01 | 0·27 | 0·13 | | | | | 0·56 | | |
| | | Ghatal | | | | | | | | | | | 0·15 | 0·02 | | | | | 0·72 | 0·08 | | |
| | | Kukrahati | | | | | | | | | | | 0·27 | 0·04 | | | | | | 1·05 | 0·16 | |
| | | Amlagura | | | | | | | | | | | 0·63 | 0·84 | 0·07 | | | | | 0·30 | 0·05 | |
| | | Panskura | | | | | | | | | | | | 0·40 | | | | | | 1·75 | 0·40 | |
| | | Dantan | | | | | | | | | | | | 0·60 | 0·80 | | | | | 0·40 | | |
| | | Chandrakona* | | | | | | | | | | | | | | | | | | | | |
| | | Pachot | | | | | | | | | | | | 0·69 | 0·02 | | | | 0·51 | | | 2·16 |
| | | Bhagwanpur | | | | | | | | | | | | 0·16 | 0·09 | | | | | 0·15 | | |
| | | Kultikri | | | | | | | | | | | 0·35 | 0·34 | | | | | | 0·05 | | |
| | | Nayabasan* | | | | | | | | | | | | | | | | | | | | |
| | | Silda (*Belpahari*). | | | | | | | | | | | 0·60 | 0·95 | 0·31 | | | 0·50 | 0·05 | | | |
| | | Chandri* | | | | | | | | | | | | | | | | | | | | |
| | | Goaltore | | | | | | | | | | | 1·37 | 0·09 | | | | | 0·05 | 1·56 | | |
| | | Salboni | | | | | | | | | | 0·40 | 0·50 | 0·10 | | | | 1·11 | | 1·62 | | 2·02 |
| | | Narayangarh | | | | | | | | | | | 0·90 | 0·70 | | | | | | | | 0·40 |
| | | Ramnagar | | | | | | | | | | | | 1·10 | 0·95 | | | | | | | |
| | | Mohanpur | | | | | | | | | | | 0·75 | 0·50 | | | | | 0·57 | | | 1·50 |
| | | Henria | | | | | | | | | | | | | | | | | | | | 1·83 |
| | | Jenka (*Khapri*) | | | | | 0·08 | | | | | | | 0·16 | | | | | | 0·10 | | |
| | | Nandigram | | | | | 0·01 | | | | | | | | | | | | | | | 0·95 |
| | | Moyna | | | | | | | | | | | | 0·27 | 0·17 | | | | | 1·92 | | |
| | | Pingla | | 0·20 | 0·20 | | | | | | | | | | | | | | | | | |
| | | Narajole | | | | | | | | | | 0·33 | 0·50 | | | | | | 0·45 | 0·40 | | 2·20 |
| | | Jhargram* | | | | | | | | | | | | | | | | | | | | |
| | | Balichak | | | | | | | | | | | | 0·12 | 0·08 | | | | | 1·16 | 0·16 | |
| | | Dalman | | | 0·05 | | | | | | | | | 0·01 | | | | | | 0·28 | 0·02 | |
| | | Kharagpur | | | | | | | | | | | 0·15 | 0·15 | | | | | | | | 1·41 |
| | Hooghly | Sotanpur | | | | | | | | | | | 0·24 | 0·01 | | | | | | 0·23 | 0·51 | |
| | | Hooghly | | | | | | | | | | 0·23 | 1·00 | | | | | | 0·15 | | | 0·08 |
| | | Arambagh | | | | | | | | | | | 0·18 | | | | | | 0·59 | 0·26 | | |
| | Howrah | Howrah | | | | | | | | | | | 0·24 | | | | | | 0·05 | | 0·01 | |
| | | Mohesrekha | | | | | | | | | | | 0·16 | | | | | | | 0·65 | 0·13 | |
| | | Uluberia | | | 0·01 | | | | | | | 0·27 | 0·02 | | | | | | 0·04 | 0·42 | 0·06 | |
| | | Amta | | | 0·60 | | | | | | | | 0·40 | | | | | | 0·42 | 0·15 | | |
| RAJSHAHI. | Bogra | Bogra | | | | | 0·45 | | | | | 0·34 | | | | | | | 0·33 | 0·08 | | 0·01 |
| | | Nator | | | | 0·07 | 0·20 | | | | | 0·38 | 0·02 | | | | | 2·12 | 0·15 | 0·37 | | |
| | | Naugaon | | | | | 0·15 | | | | | 0·08 | 0·12 | | | | | | | | | |
| | | Bilmaria | | | | 0·10 | 0·35 | 0·18 | | | | 0·62 | | | | | | 1·00 | 0·14 | | | |
| | | Manda | | | | 0·20 | | | | | 0·30 | | | | | | 0·17 | | | | | |
| | | Mahadebpur | | | | | | | | | | | | | | | | | 0·26 | | | 0·10 |
| | | Tanor | | | | | | | | | | 0·91 | | | | | | | | 0·16 | | |
| | | Chaugram | | | | | 0·20 | | | | | 0·30 | 0·50 | | | | | | | | | |
| | | Jouri | 1·72 | 0·30 | | | | | | | | 0·38 | 0·47 | | | | | 1·08 | 0·45 | 0·59 | | |
| | Dinajpur | Nilphur | | | | 0·85 | | | | | | | | | | | | | | | | |
| | | Nawabganj | | | | | | | | | | | 1·20 | 2·30 | | | | | | 0·40 | | 1·20 |
| | | Gangarampur | | | | 0·01 | | | | | | | 0·15 | | 0·28 | | | | | | | 0·27 |
| | | Churamon | | | 0·58 | | | | | | | | 1·00 | | | | | | | | | |
| | | Raiganj* | | | | | | | | | | | | | | | | | | | | |
| | | Dinajpur | | | | 0·30 | | | | | | | 0·75 | | 0·45 | | | | | | | 0·60 |
| | | Balurghat | | | | 4·65 | | | | | | 0·08 | | | | | | | | 3·15 | | 0·95 |
| | | Thakurgaon | | | | 2·09 | | | | | | | 0·71 | 1·12 | 0·18 | | | | | 1·52 | 0·39 | 0·75 |
| | | Setalganj | | | 0·05 | | | | | | | 0·65 | | 0·60 | | | | | | | 2·10 | |
| | | Ranganj | | | | | | | | | | | 0·93 | | | | | | | | | 1·01 |
| | | Atwari | 0·70 | 0·30 | 1·00 | 1·20 | | | | | | | 0·70 | 0·70 | 0·72 | | | | | | 0·80 | 0·70 |
| | | Birganj | | | | 1·35 | | | | | | | 0·95 | 1·55 | 0·40 | | | | | | 1·19 | 0·20 |
| | | Parbatipur | | | | 1·18 | | | | | | | 0·59 | 0·03 | 0·97 | | | | | 0·78 | | 0·50 |
| | Jalpaiguri | Jalpaiguri | | 0·25 | 6·10 | 5·25 | | | | | 0·57 | | 1·18 | 0·25 | 1·15 | 0·15 | | | 0·28 | | 0·35 | 0·45 |
| | | Alipur Duars | 0·57 | 4·63 | 8·95 | 1·28 | 0·55 | | | | 1·38 | 0·55 | 1·85 | 0·10 | 0·85 | 2·47 | 0·16 | | | 0·16 | 0·30 | 0·12 |
| | | Falakata | | 0·21 | 4·15 | 5·32 | | | | | 0·75 | | 0·76 | 0·39 | 1·75 | 0·99 | 0·18 | 0·27 | 0·09 | | 0·95 | 0·15 |
| | | Debiganj | | | | 2·70 | | | | | | 1·10 | | | | | | | | | 2·59 | 1·42 |
| | | Bhagatpur (*Nagrakata*). | 0·10 | 0·53 | 2·28 | 1·00 | 0·01 | | 0·69 | 3·08 | 0·51 | 0·29 | 0·61 | 0·05 | 0·18 | 0·18 | 0·37 | | 0·05 | 0·18 | 0·42 | 0·30 |
| | | Buxa | | 0·71 | 1·73 | 0·41 | | | 0·99 | 1·50 | 2·06 | 1·50 | 0·03 | 0·75 | 0·72 | 3·20 | 1·21 | 0·25 | 0·58 | 1·10 | 0·70 | 1·38 |
| | | Kalchini | | 0·04 | 1·02 | 2·29 | 0·30 | | | 0·19 | 0·49 | 0·16 | 0·93 | 0·13 | 0·30 | 3·26 | 2·19 | 0·21 | 3·04 | 0·93 | 0·08 | 0·08 |
| | | Kumargram | 0·21 | | 3·55 | 0·79 | | | | | 0·75 | 0·83 | 2·55 | 0·49 | 0·07 | 1·98 | 1·45 | 0·36 | 1·27 | 0·32 | 0·26 | 0·95 |
| | Darjeeling | Siliguri | 0·42 | 0·1[illegible] | 1·80 | 3·90 | | | | | | | 0·80 | | 1·15 | | 0·03 | 0·20 | | | | 2·40 |
| | | Darjeeling | 0·07 | 0·07 | 0·21 | 1·02 | 0·02 | 0·08 | 0·01 | 0·02 | 0·13 | 0·08 | 0·18 | 0·05 | 0·58 | 0·27 | | | | 0·08 | 0·14 | 0·27 |
| | | Kalimpong | 2·18 | | 0·10 | 0·38 | | | 0·01 | | 0·04 | 0·04 | 0·01 | 0·02 | 0·22 | 0·06 | 0·09 | | 0·02 | | | 0·13 |
| | | Mongpoo | 0·29 | | 0·45 | 1·85 | 0·02 | 0·10 | | 0·14 | 0·00 | 0·23 | 0·42 | 1·24 | 1·12 | 0·50 | 0·18 | 0·05 | 0·02 | 0·14 | 0·39 | 0·36 |
| | | Kurseong | 0·21 | 0·05 | | 0·12 | | | | | 0·15 | | 0·55 | 0·34 | 0·57 | 0·06 | 0·03 | | | 0·11 | 0·93 | |
| | | Pedong | 0·32 | 0·02 | 0·05 | 0·59 | 0·01 | | 0·02 | 0·05 | 0·03 | 1·38 | 0·05 | 0·01 | 0·71 | 0·03 | 0·95 | | 0·01 | 0·90 | 0·71 | 0·04 |
| | | Jalapahar | 0·07 | 0·07 | 0·21 | 1·62 | 0·02 | 0·08 | 0·01 | 0·02 | 0·13 | 0·08 | 0·18 | 0·05 | 0·58 | 0·37 | | | | 0·08 | 0·14 | 0·27 |
| | Rangpur | Bhawaniganj (*Gaibandha*). | | | | | 0·15 | | | | | | 0·05 | 0·38 | | | 0·42 | | 0·05 | | 0·50 | |
| | | Rangpur | | | | 1·41 | 0·22 | | | | | | 0·74 | 1·62 | 0·61 | | 00·1 | | | | 0·64 | |
| | | Pirganj | | | 0·80 | 0·10 | 0·08 | | | | | | 0·80 | | 3·20 | | 0·65 | | | | 0·16 | 0·94 |
| | | Kurigaon | 0·05 | | 0·04 | | 0·40 | | | | 0·91 | | 0·72 | 0·55 | 0·70 | 1·18 | | | | | 3·40 | 2·66 |
| | | Gobindganj* | | | | | | | | | | | | | | | | | | | | |
| | | Bagdogra (*Nilphamari*) | | 0·70 | 0·34 | 1·27 | | | | | | | 0·95 | 2·50 | 1·16 | | | | | | 2·47 | 0·59 |
| | | Ulipur* | | | | | | | | | | | | | | | | | | | | |
| | | Sunderganj | | | 0·25 | | 0·30 | | | | | | 1·12 | 0·22 | 1·50 | 0·21 | | | | 0·50 | | |
| | | Saidpur | | | | 0·90 | | | | | | | 0·45 | 1·38 | 0·61 | | | | | 0·24 | 0·60 | 0·99 |
| | Bogra | Sherpur | | | | | | | | | 0·75 | 0·81 | | | | 0·35 | | | | | | |
| | | Nowkhilla* | | | | 0·10 | | | | | | 0·50 | 0·75 | | | | | | | | | |
| | | Bogra | | 0·02 | | 0·04 | | | | | | 0·87 | 3·70 | | | | | | | | | 0·10 |
| | | Panchbibi | | | 1·63 | 0·70 | | | | | | | 0·22 | | | | 0·33 | | | 1·23 | | |
| | | Khoalal | | | | | | | | | 0·60 | | | | | | | | 0·15 | | | 1·00 |
| | Pabna | Shahzadpur | | | | | | | | | 0·28 | | | | | 1·45 | 0·15 | | 0·26 | | | 0·25 |
| | | Pabna | 0·05 | | | | 0·10 | | | | | 0·32 | 0·11 | | 0·05 | | 0·11 | 0·77 | 0·27 | 0·18 | | |
| | | Sirajganj | | | | 0·33 | 0·50 | | | | | 1·48 | 0·40 | | | | 0·63 | 0·40 | | 0·28 | | |
| | | Sara | | | | | | | | | 0·73 | | | | | | 0·15 | 0·55 | 0·20 | 0·16 | | |

**FOR THE MONTH OF MAY 1923—*contd.***

| 21 | 22 | 23 | 24 | 25 | 26 | 27 | 28 | 29 | 30 | 31 | Number of rainy days. | Average number of rainy days. | Total rainfall for the month | Normal rainfall for the month. | Heaviest rainfall during the month. | Total rainfall from 1st March up to 31st May 1923 | Normal rainfall from 1st March up to 31st May 1923 | Station | DISTRICT | DIVISION |
|---|---|---|---|---|---|---|---|---|---|---|---|---|---|---|---|---|---|---|---|---|
| 2·47 | ... | . | | 0·31 | | .. | | | | 0·06 | 4 | 6·2 | 4·25 | 5·01 | 2·47 | 4·34 | 7·77 | Contai | Midnapore | BURDWAN—*contd.* |
| .. | | | .. | . | 0·20 | | . | | | | 4 | 6·6 | 5·00 | 5·07 | 2·79 | 5·00 | 8·41 | Tamluk. | | |
| 1·98 | . | . | 0·17 | . | 0·05 | 0·29 | | | | | 6 | 7·1 | 3·46 | 5·06 | 1·98 | 5·24 | 8·63 | Midnapore | | |
| 1·15 | | .. | 0·05 | | 0·02 | | | | | | 3 | 7·3 | 2·19 | 5·40 | 1·15 | 6·58 | 9·07 | Ghatal | | |
| 0·93 | . | . | | | | | | | | | 4 | 6·4 | 2·45 | 5·33 | 1·05 | 2·45 | 8·37 | Kukrahati. | | |
| 0·95 | .. | ... | 0·25 | .. | . | | | | . | 0·50 | 6 | 6·7 | 3·50 | 4·77 | 0·95 | | 8·22 | Amlagura. | | |
| 2·80 | . | | | | . | | | | | | 4 | 7·9 | 5·35 | 5·36 | 2·80 | 6·60 | 8·69 | Panskura | | |
| | .. | ... | . | .. | | | | . | | | 3 | 7·0 | 1·80 | 4·69 | 0·80 | 3·30 | 8·00 | Dantan. | | |
| | | | | | | | | | | | | 7·1 | | 5·71 | | | 9·31 | Chandrakona | | |
| . | . | . | 0·46 | | . | | | | 0·06 | | 4 | 6·4 | 3·90 | 5·92 | 2·16 | 6·11 | 9·33 | Pachchigarh. | | |
| 1·80 | .. | . | 0·12 | | | | | | | 0·12 | 5 | 7·2 | 2·45 | 4·84 | 1·80 | 2·49 | 9·08 | Bhagwanpur | | |
| ... | .. | 0·51 | 0·50 | | | . | | | 0·16 | | 5 | 7·7 | 1·85 | 4·28 | 0·51 | 3·61 | 7·87 | Kultikri. | | |
| | | | | | | | | | | | | (n) | | (n) | | | (n) | Nayabasan | | |
| 0·08 | . | . | 0·05 | 0·06 | . | 0·40 | | | | 0·22 | 7 | 6·1 | 3·82 | 4·55 | 0·95 | 7·56 | 8·19 | Silda (*Belpahari*) | | |
| | | | | | | | | | | | | (n) | | (n) | | | (n) | Chandil | | |
| 1·42 | | | 0·56 | 0·93 | | | | | | 0·80 | 7 | 7·0 | 7·18 | 4·49 | 1·56 | 7·90 | 7·94 | Gomoh. | | |
| | . | 0·40 | 0·20 | | | | | | 0·28 | | 9 | 8·4 | 6·58 | 4·30 | 2·02 | 7·51 | 6·71 | Salboni. | | |
| . | | 0·10 | 0·60 | . | . | | | | | | 5 | 6·6 | 2·70 | 4·02 | 0·90 | 2·87 | 12·49 | Narayangarh | | |
| 1·19 | . | . | | | 0·32 | | | . | | | 4 | 6·8 | 3·56 | 5·47 | 1·19 | 3·56 | 8·09 | Ramnagar. | | |
| | | . | 0·17 | | | | | | | | 5 | 6·4 | 3·59 | 6·64 | 1·60 | 4·05 | 11·04 | Mohanpur. | | |
| | ... | | 0·90 | | . | | | | | | 2 | 6·4 | 2·75 | 4·03 | 1·63 | 3·28 | 7·75 | Benria | | |
| 2·05 | | | 0·42 | 0·19 | | | | | | | 5 | 6·7 | 3·00 | 5·28 | 2·05 | 3·00 | 9·30 | Jenka (*Kharagpur*) | | |
| . | | 0·05 | | | | | 0·05 | 0·05 | | | | 7·9 | | 5·59 | | | 9·73 | Nandigram. | | |
| 2·90 | | | .. | 0·10 | | 0·30 | | | | | 6 | 7·5 | 5·06 | 4·96 | 2·90 | 5·88 | 8·23 | Moyna | | |
| | | | | | | | | | | | 2 | 8·0 | 0·40 | 4·56 | 0·20 | | 7·55 | Pingla | | |
| | | . | 0·40 | | | | | | | | 6 | 6·0 | 4·28 | 7·15 | 2·20 | 5·08 | 13·30 | Narajole | | |
| | | | | | | | | | | | | | | | | | | Dharam | | |
| 1·50 | | | | | | 0·38 | | | | 0·21 | 6 | (n) | 3·61 | (n) | 1·50 | 4·79 | | Balichak. | | |
| 1·12 | | | | 0·24 | | 0·04 | | | | | 3 | (n) | 1·96 | (n) | 1·12 | 4·58 | | Dainan | | |
| | | 2·26 | 0·16 | | 0·50 | | | | | | 6 | (n) | 2·43 | (n) | 1·21 | | | Kharagpur | | |
| 0·05 | | | . | 0·33 | 0·02 | | | | | | 4 | 7·6 | 1·39 | 5·38 | 0·51 | 3·52 | 9·03 | Serampur | Hooghly | |
| | 0·40 | 0·90 | | | | | | | 0·15 | | 6 | 7·8 | 2·91 | 6·07 | 1·00 | 4·40 | 9·76 | Hooghly | | |
| 1·39 | | | | 0·39 | | | | | | | 5 | 7·4 | 2·81 | 5·56 | 1·39 | 4·79 | 8·73 | Arambagh. | | |
| 0·20 | . | | | 0·18 | | | | | | | 3 | 7·2 | 0·64 | 5·03 | 0·21 | 3·06 | 8·33 | Howrah | Howrah | |
| 2·63 | | | | 0·36 | 0·12 | | | | | | 6 | 7·3 | 4·05 | 5·36 | 2·63 | 4·80 | 8·49 | Mohesreka | | |
| 1·39 | | | | 0·08 | | | | | | | 3 | 7·5 | 2·29 | 5·41 | 1·39 | 2·58 | 8·61 | Uluberia | | |
| 3·60 | . | | | 0·22 | | 0·35 | | | | | 7 | 7·5 | 5·74 | 5·55 | 3·60 | 6·97 | 10·11 | Amta | | |
| | | 0·25 | | | 0·13 | 0·86 | | | 0·55 | | 7 | 7·8 | 3·00 | 5·72 | 0·86 | 5·58 | 8·70 | Boalia | Boalia | |
| | | . | | 0·22 | | | | 0·52 | | 0·02 | 7 | 8·5 | 4·07 | 7·28 | 2·12 | 4·79 | 10·48 | Nator | | |
| | | 0·05 | | | | | 0·16 | | | | 3 | 4·9 | 0·89 | 6·18 | 0·14 | 1·49 | 8·82 | Naugaon | | |
| | | 0·26 | 0·27 | | 0·12 | 0·24 | | | 2·08 | 2·51 | 12 | 8·1 | 7·57 | 5·50 | 2·51 | 8·42 | 9·76 | Bilmaria | | |
| | 0·56 | 0·28 | | 0·18 | | | | 0·28 | | | 7 | 6·5 | 1·77 | 5·31 | 0·56 | | 7·37 | Manda | | |
| | 0·30 | | | | | 0·41 | 0·20 | 0·21 | | 1·80 | 7 | 7·7 | 2·56 | 5·92 | 1·80 | | 8·05 | Mahadebpur | | |
| | .. | 0·22 | | | | | | 0·40 | | | 4 | 6·7 | 1·69 | 5·54 | 0·91 | | 7·65 | Tamor | | |
| | | 1·00 | | | | | | | | | 4 | (n) | 2·00 | (n) | 1·00 | | (n) | Chaugram | | |
| . | | 3·69 | 0·48 | | | 0·15 | | | | | 10 | (n) | 6·71 | (n) | 1·12 | | | Jaori | | |
| | 0·20 | | | | 0·10 | | 0·30 | | | | 4 | 8·0 | 0·95 | 5·71 | 0·35 | 1·30 | 7·37 | Nithpur | Dinajpur | RAJSHAHI |
| | | | | | | 0·10 | 1·40 | | | | 6 | 7·6 | 8·30 | 7·73 | 2·30 | 8·51 | 9·94 | Nawabganj | | |
| 0·85 | | | | 0·30 | | | 0·07 | 0·12 | | | 6 | 6·9 | 2·19 | 6·60 | 0·85 | 3·63 | 9·01 | Gangarampur | | |
| | | 0·08 | | | | | 0·90 | | | 1·60 | 5 | 6·5 | 4·88 | 4·70 | 1·60 | 4·96 | 6·77 | Churaman | | |
| | | | | | | | | | | | | 7·2 | | 5·61 | | | 7·83 | Raiganj | | |
| 0·90 | | | 0·08 | | | | 1·08 | 0·65 | | 0·20 | 8 | 8·6 | 5·01 | 7·41 | 1·08 | 7·45 | 10·40 | Dinajpur | | |
| 1·95 | | | 1·02 | | .. | | | 1·02 | 0·35 | | 7 | 7·5 | 13·18 | [illegible] | 4·65 | 14·18 | 9·31 | Balurghat | | |
| | 1·57 | | | | | | | 2·68 | 0·02 | 1·12 | 10 | 9·5 | 12·92 | 7·65 | 2·68 | 18·45 | 10·87 | Thakurgaon | | |
| | | | | | | | 2·70 | 0·55 | 0·25 | 0·20 | 7 | 9·0 | 7·30 | 8·96 | 2·70 | 8·55 | 9·90 | Setabganj. | | |
| . | 0·85 | 0·15 | | | | | 0·99 | 1·05 | 0·15 | 1·67 | 8 | 8·8 | 6·80 | 6·76 | 1·67 | 7·59 | 9·78 | Raiganj. | | |
| | | | | | | 0·53 | | 0·80 | | | 11 | 9·9 | 8·15 | 8·22 | 1·20 | 12·05 | 12·96 | Atwari. | | |
| | | | | | | 0·42 | | | 0·49 | 0·51 | 6 | 10·4 | 7·46 | 8·98 | 1·65 | 12·22 | 12·31 | Birganj | | |
| | | | 0·15 | 0·50 | | | 1·85 | 1·08 | | 0·48 | 10 | 10·5 | 8·21 | 8·80 | 1·85 | 9·00 | 12·37 | Parbatipur | | |
| 1·78 | | | | . | 0·21 | 1·20 | | 1·12 | 0·05 | 0·55 | 16 | 12·3 | 20·79 | 11·16 | 6·10 | 20·45 | 16·50 | Jalpaiguri | Jalpaiguri | |
| 1·44 | | 0·14 | | 1·10 | 0·41 | 2·92 | | 0·55 | 0·76 | 1·32 | 23 | 13·5 | 35·32 | 14·80 | 8·95 | 41·28 | 22·47 | Alipur Duars | | |
| 1·44 | | | | 1·60 | 0·10 | 2·60 | .. | 0·15 | 0·40 | 1·60 | 19 | 13·8 | 22·88 | 11·96 | 2·47 | 25·08 | 17·50 | Falakata | | |
| 0·60 | . | | | | | | | 4·50 | 0·46 | 1·82 | 8 | 10·7 | 14·74 | 9·84 | 4·50 | 22·71 | 14·17 | Debiganj | | |
| 1·77 | .. | . | 1·24 | 0·71 | 0·27 | 0·50 | | | 0·46 | 0·19 | 22 | 15·9 | 16·00 | 15·79 | 2·28 | 23·37 | 24·32 | Bhagatpur (*Nayrukata*) | | |
| ... | | 1·46 | 0·65 | 0·39 | 0·10 | 0·03 | 0·27 | 1·24 | 0·40 | 0·08 | 23 | 16·4 | 23·14 | 14·62 | 3·20 | 35·35 | 31·00 | Buxa | | |
| 2·44 | .. | . | 1·38 | 0·10 | 0·95 | 2·04 | 0·15 | 0·30 | 1·45 | 0·44 | 22 | 15·4 | 22·67 | 14·50 | 2·44 | 29·36 | 22·70 | Kalchini | | |
| 1·73 | | | 0·74 | 0·85 | 0·60 | 0·75 | . | 0·72 | 2·48 | 0·17 | 22 | 15·8 | 23·41 | 17·49 | 2·55 | 29·78 | 27·51 | Kumargram | | |
| 1·30 | | | . | | 1·15 | 0·40 | | 0·45 | 1·50 | 1·20 | 14 | 12·6 | 16·91 | 10·81 | 2·40 | | 15·74 | Siliguri | Darjeeling | |
| 0·93 | 0·31 | 0·07 | 0·02 | 0·04 | 0·08 | 0·28 | 0·04 | 0·02 | 0·02 | 0·02 | 12 | 14·1 | 6·32 | 8·52 | 1·62 | 11·08 | 14·25 | Darjeeling | | |
| 0·55 | | | | | . | 0·04 | 0·16 | | | 0·24 | 8 | 11·2 | 2·39 | 5·63 | 0·65 | | 10·15 | Kalimpong. | | |
| 1·31 | | 0·05 | 0·50 | 0·59 | 0·12 | 0·05 | 0·01 | 0·21 | 0·54 | 1·38 | 21 | 15·1 | 12·22 | 9·61 | 1·85 | 17·16 | 15·78 | Mungpoo | | |
| 1·63 | 0·05 | | 0·31 | 0·11 | 0·13 | 0·10 | 0·02 | | 0·21 | 0·42 | 16 | 14·9 | 8·05 | 12·01 | 1·63 | 14·98 | 17·98 | Kurseong | | |
| 0·49 | 0·04 | 0·78 | 0·26 | 0·03 | 0·36 | 0·14 | 0·66 | 0·06 | 1·62 | 0·76 | 15 | 16·0 | 9·54 | 8·57 | 1·38 | 13·61 | 15·85 | Pedong | | |
| 0·93 | 0·31 | 0·07 | 0·02 | 0·04 | 0·08 | 0·28 | 0·04 | 0·02 | 0·02 | 0·02 | 12 | (n) | 6·32 | (n) | 1·62 | 11·28 | (n) | Jalapahar | | |
| ... | ... | 0·01 | | 0·30 | . | 0·08 | 0·40 | 0·85 | | | 7 | 11·1 | 4·35 | 10·14 | 1·40 | 6·38 | 11·38 | Bhawaniganj (*Gaibandha*) | Rangpur | |
| 1·42 | .. | . | 0·14 | 1·15 | | 1·01 | 0·11 | 1·78 | 1·10 | 0·20 | 13 | 11·7 | 10·37 | 10·86 | 1·78 | 17·03 | 15·16 | Rangpur | | |
| 0·15 | . | | .. | 0·90 | . | 1·50 | . | 0·60 | . | 0·16 | 12 | 9·9 | 10·04 | 10·22 | 3·20 | 11·14 | 13·65 | Pirganj | | |
| 0·35 | ... | 0·05 | 0·15 | 1·03 | 0·16 | 0·59 | | 0·35 | 2·75 | 1·66 | 16 | 12·5 | 17·75 | 14·19 | 2·40 | 21·54 | 20·26 | Kaunia | | |
| | | | | | | | | | | | | 8·4 | | 9·14 | | | 12·71 | Gobindganj | | |
| 0·74 | ... | . | . | 0·40 | . | | .. | 2·14 | 0·16 | 0·50 | 13 | 10·9 | 14·41 | 10·00 | 2·47 | 20·17 | 14·08 | Bagdogra (*Nilphamari*) | | |
| | | | | | | | | | | | | 13·2 | | 13·57 | | | 8·95 | Ulipur. | | |
| 0·13 | . | ... | | .. | | | 0·58 | 2·73 | . | 0·53 | 11 | 11·7 | 8·47 | 11·42 | 2·73 | 12·75 | 16·22 | Sundarganj. | | |
| ... | ... | .. | . | ... | .. | . | 0·51 | 1·58 | 0·51 | 0·92 | 11 | 11·1 | 9·14 | 10·49 | 1·58 | 11·26 | 13·96 | Saidpur. | | |
| 0·20 | 1·25 | 0·82 | ... | . | 0·05 | 1·10 | 1·05 | 0·36 | | 1·15 | 10 | 10·1 | 8·01 | 7·95 | 1·25 | 9·57 | 11·52 | Sherpur | Bogra | |
| | .. | .. | .. | .. | | . | 0·33 | . | | | 5 | 10·4 | 1·77 | 9·18 | 0·75 | | 12·86 | Nowkhila | | |
| 0·65 | . | 0·21 | 1·10 | ... | ... | 0·86 | ... | 0·19 | 0·05 | .. | 9 | 10·0 | 8·84 | 8·66 | 3·70 | 9·59 | 12·17 | Bogra | | |
| ... | .. | 0·90 | | ... | 1·70 | . | 0·52 | | .. | 1·52 | 9 | 8·1 | 9·39 | 7·67 | 1·70 | 13·25 | 10·78 | Panchbibi | | |
| . | .. | | ... | .. | .. | | . | 0·15 | | 1·75 | 4 | (n) | 2·72 | (n) | 1·75 | 4·87 | (n) | Khetlal | | |
| ... | .. | 0·42 | 1·20 | .. | ... | 0·02 | 0·79 | | | | 8 | 12·0 | 4·63 | 7·51 | 1·45 | 8·38 | 12·86 | Shahazdpur | Pabna | |
| ... | ... | 0·09 | 0·02 | 1·24 | 1·73 | .. | 0·01 | 0·30 | 0·25 | 0·32 | 12 | 9·3 | 5·97 | 7·65 | 1·72 | 8·36 | 12·14 | Pabna | | |
| ... | . | 0·46 | 0·04 | 0·04 | 0·07 | 1·83 | 0·05 | . | | .. | 10 | 10·4 | 6·97 | 8·01 | 1·63 | 9·14 | 12·51 | Sirajganj. | | |
| ... | ... | ... | .. | ... | 0·36 | 0·19 | . | | 0·95 | 0·32 | 9 | 10·5 | 3·61 | 7·19 | 0·95 | 4·09 | 10·52 | Sara | | |

(n) Not recorded.

## DAILY RAINFALL RECORDED IN BENGAL

| Division. | District | Station | 1 | 2 | 3 | 4 | 5 | 6 | 7 | 8 | 9 | 10 | 11 | 12 | 13 | 14 | 15 | 16 | 17 | 18 | 19 | 20 |
|---|---|---|---|---|---|---|---|---|---|---|---|---|---|---|---|---|---|---|---|---|---|---|
| RAJSHAHI—concld. | Malda | Malda | | | | | | | | | | | 0·01 | | | | | | 0·09 | 0·03 | | |
| | | Chanchal | | | | | | | | | | | 0·48 | | | | | | | | | |
| | | Gazol | | | | | | | | | | 0·15 | | | | | | | | | | |
| | | Sibganj | | | | | | | | | | | | | | | | 0·41 | | 0·35 | | |
| | | Gomastapur | | | | | | | | | | 0·10 | | | | | | 0·26 | | 0·06 | | |
| | | Nawabganj* | | | | | | | | | | | | | | | | | | | | |
| DACCA | Dacca | Munshiganj | | | 0·27 | | | | | | | 0·34 | | | | | 1·12 | 0·84 | | | 0·14 | 1·71 |
| | | Dacca | | | | | | | | | | 0·69 | | | | | 0·47 | 1·43 | | 0·08 | | |
| | | Nawabganj | | | | 0·88 | | 0·04 | | | 0·58 | | | | | | 0·93 | 0·27 | 0·23 | 0·08 | 0·09 | |
| | | Narayanganj | | | | 0·17 | | 0·15 | | | | 0·39 | | | | | 0·77 | 0·84 | | 0·12 | 0·09 | 0·06 |
| | | Narsingdi | | | | 0·32 | 0·03 | 0·01 | | | | 0·20 | | | | | 0·15 | 0·47 | | 0·19 | 0·27 | |
| | | Manikganj | | | | | | 0·80 | | | | 1·50 | 0·48 | | | | 2·31 | 0·64 | 0·12 | 0·22 | | |
| | | Joydebpur | 0·03 | | | | 0·24 | | | | 0·12 | | | | | | 0·30 | | 0·70 | | 0·22 | |
| | | Kapasia | 0·73 | 0·53 | | 0·35 | | 0·50 | | | | 0·18 | | | | | 0·70 | 0·35 | | 0·58 | 0·90 | |
| | Mymensingh | Kishorganj | | | | 1·45 | 0·11 | | | | | | 1·58 | | 0·11 | | 0·15 | 0·07 | | 0·07 | 1·87 | |
| | | Atia (Tangail) | | | | | 0·07 | | | | | 0·40 | | | | | 0·24 | 0·14 | 0·18 | | | |
| | | Barhatbari | | | | | | | | | | | 1·50 | | | | 0·82 | | | 0·28 | | |
| | | Mymensingh | | | | | | | | | | 0·74 | 0·33 | | 1·45 | | 0·71 | | | 1·00 | 2·51 | |
| | | Jamalpur | | | | 0·04 | 0·21 | | | | | | 0·31 | | 0·05 | | 0·21 | | | 0·95 | 0·28 | |
| | | Netrokona | 0·82 | | | 0·10 | | | | | | | 0·19 | | 4·96 | | | | | 0·13 | 0·58 | 1·51 |
| | | Pingna | | | | 0·92 | | | | | | 0·60 | 1·07 | | | | 0·20 | 0·26 | | 0·35 | | |
| | | Durgapur | | | | | 1·15 | | | | | | 0·25 | 0·54 | 0·45 | | | | | 0·23 | 2·00 | |
| | | Sherpur (Town) | | | | 0·43 | 0·25 | | | | | | | 3·00 | | | | | | 0·38 | | |
| | | Dewanganj | | | | 4·75 | 2·60 | | | | | | | | 5·25 | | 0·46 | | | 0·72 | 1·62 | 2·35 |
| | | Nalitabari | | | | 0·75 | | | | | | | | | 1·80 | | | | | 0·05 | 0·95 | 0·55 |
| | Faridpur | Madaripur | | | | | | | | | | 0·42 | 0·36 | | | | 1·05 | 0·45 | | | | |
| | | Faridpur | | | 0·06 | | | 0·08 | | | | 0·47 | 0·35 | | | | 1·23 | 0·40 | 0·97 | 0·38 | 0·09 | |
| | | Rajbari (Goalundo) | | | 0·20 | 1·08 | | | | | | 0·64 | 0·04 | | | | 2·76 | 0·55 | 0·38 | 0·27 | | |
| | | Haridaspur (Gopalganj) | | | | | | 0·19 | | | | 0·16 | 0·49 | | | | 0·29 | 1·31 | | 0·23 | 0·26 | 0·35 |
| | | Takerhat | | | | | 0·01 | | | | 0·72 | 0·03 | | | | 0·51 | 0·78 | 0·17 | 0·04 | 0·71 | | 1·02 |
| | | Bhanga | | 0·29 | 0·07 | 0·50 | | 0·05 | | | | 0·72 | 0·20 | | | | 0·60 | 0·05 | 0·40 | 0·20 | 0·15 | 0·12 |
| | | Pangsa | | | | 1·56 | 0·30 | | | | 0·70 | 0·81 | | | | | 1·85 | 0·75 | 1·46 | | | |
| | | Baliakandi | | | | | | | | | | 0·76 | | | | | 2·03 | 0·57 | 0·16 | 0·42 | 0·53 | 0·87 |
| | | Bhusna | | | | | 0·22 | | | | | 0·43 | 0·05 | | | | | 0·68 | 0·20 | 0·14 | 0·20 | 0·41 |
| | | Pakung | | | | | | | | | | 0·65 | | | | | 1·42 | 0·34 | 0·18 | | | |
| | Bakarganj | Patuakhali | | | | | 0·11 | 0·93 | 0·04 | | | 0·25 | 0·33 | | | | 0·25 | 0·04 | 0·01 | 0·18 | | 0·21 |
| | | Barguna | | | 0·37 | 0·20 | 1·80 | | | | 0·20 | 1·04 | | | | | | | 0·20 | | | |
| | | Pirozpur | | | | 0·35 | | 0·22 | | | | 0·22 | 0·16 | | | | 0·11 | 0·04 | | | 0·05 | 0·20 |
| | | Barisal | | | 0·01 | 0·04 | | 0·25 | | | | 0·47 | 0·47 | | | | 0·22 | 0·05 | 0·01 | 0·02 | 0·05 | |
| | | Gaurnadi* | | | | | | | | | | | | | | | | | | | | |
| | | Bhola* | | | | | | | | | | | | | | | | | | | | |
| | | Daulatkhan | | | | | 0·30 | 0·25 | | | | | | | | | 0·27 | 0·30 | 0·01 | 0·10 | | |
| | | Bauphal | | | 0·30 | | 0·75 | | | | 0·38 | | | | | 0·19 | | | 0·40 | | | 1·90 |
| CHITTAGONG | Chittagong | Cox's Bazar | | 0·08 | | | 0·35 | 2·91 | 4·78 | 0·02 | | | | | | | 0·35 | 0·06 | | | 0·05 | 0·32 |
| | | Chittagong | | 0·27 | | | 0·11 | 0·80 | 1·24 | | | 0·01 | | | | | 0·32 | 0·19 | | 0·08 | | |
| | | Kutubdia | | | | | 0·42 | 1·55 | 1·03 | | | 0·22 | | | | | 1·91 | 0·29 | | | | |
| | | Satkania | | | | | 0·85 | 1·50 | | | 0·20 | 0·15 | | | 1·35 | 0·43 | 0·50 | | | 0·10 | 0·80 | |
| | | Kodala | 0·21 | | 0·02 | | 0·16 | 0·80 | 0·85 | | 0·08 | 0·25 | | | | 0·08 | 0·30 | 0·12 | | 0·40 | 0·87 | 0·34 |
| | | Mirsarai | | | | | 0·40 | 0·10 | | | | | | | 0·65 | 0·54 | 0·35 | | | | 2·30 | |
| | Tippera | Comilla | | 0·03 | | | 0·88 | | | | | 0·15 | | | 0·05 | | 0·20 | 0·24 | | 0·04 | 0·04 | 0·70 |
| | | Chandpur | | | 0·08 | | | | | | 0·70 | | | | | 1·41 | 1·70 | | | 0·10 | | |
| | | Brahmanbaria | 0·33 | | | 0·25 | 0·45 | | | | | 0·05 | | | | | | 0·45 | | | 0·03 | |
| | | Ranchandrapur | 0·41 | | | 0·35 | | | | | 0·08 | | | | | | 0·75 | | | | | |
| | | Nadinagar | | | | | 0·28 | | | | | | | | | | 0·83 | | | 2·45 | | 0·20 |
| | | Bandhandi | | | | 0·37 | 0·15 | | | | 0·18 | | | | | 0·20 | | | | 0·08 | 0·40 | |
| | | Asaba | | | | 0·78 | | | | | | | | | | 0·30 | 0·50 | | | | | |
| | | Lakshm | | | | | | | | | | | | | | | 0·32 | 0·08 | | | | |
| | Noakhali | Noakhali | | 0·03 | 0·28 | | 0·01 | 0·31 | 0·05 | | | 0·33 | | | | | 0·63 | 0·16 | | | | 2·06 |
| | | Feni | 0·06 | | | 0·41 | 0·14 | 0·02 | | | | | | | | 0·52 | 0·19 | | | | 0·34 | 1·54 |
| | | Hatiapur | | 2·07 | 0·37 | | | 1·09 | 0·39 | | | 0·13 | | | | 1·00 | 0·75 | 0·11 | | 0·07 | | 0·37 |
| | | Ramganj | | | | | | | | | | 0·43 | | | | | 0·60 | 1·52 | | | 0·70 | 0·30 |
| | | Chhagalnaya | | 0·16 | | | 0·19 | | | | | | 0·81 | | | | 0·19 | 0·27 | | | 0·21 | 1·65 |
| | | Hatiya | | 0·40 | 0·60 | | 0·65 | | | | 0·50 | | | | | 0·60 | | | | | | |
| | | Lakhmipur | | | | | | | | | | 0·31 | | | | | 1·36 | 1·08 | | | 0·77 | |
| | Chittagong Hill Tracts. | Rangamati | 1·95 | 1·34 | 0·06 | 0·35 | 0·24 | 0·55 | 1·02 | | | 0·15 | 1·63 | | | | 1·17 | | | | | 2·70 |
| | | Bandarban | 1·05 | 0·69 | | 0·72 | 0·55 | 0·62 | 1·25 | | | | | | | | | | | 0·53 | 0·98 | |
| | | Barkal | 2·50 | 0·64 | | 0·75 | 0·15 | 0·35 | 3·50 | | | | | | | | | | | | | 2·40 |
| | | Mahalchori | | | | 0·32 | 0·26 | | | | 1·00 | 0·39 | | | | | | | | | 1·30 | 0·35 |
| | | Lama | | | 0·32 | | 0·47 | 1·44 | 4·88 | | | | 0·05 | | | 0·46 | 0·11 | 0·04 | | 0·45 | 0·19 | 1·22 |
| | | Ramgarh | | | | | | 0·16 | 0·50 | | | | | | 0·82 | 0·02 | 0·29 | | 0·47 | | | 1·10 |
| | | Dighinala | | 0·15 | | 0·20 | | | | | | | | | | 0·45 | | | | 0·20 | 0·50 | |
| | | Manikcheri | | | | 0·15 | | 0·27 | 0·21 | | | 0·30 | | | | | 0·15 | 0·27 | | | | 0·35 |
| | Hill Tippera | Agartala | | | | 0·61 | 0·01 | | | | 0·08 | | | 0·02 | | 0·68 | 0·24 | | 0·03 | 0·40 | 0·26 | |
| | Cooch Behar. | Dinhata | 0·04 | 0·03 | 0·30 | 0·80 | 1·12 | | | | 1·95 | | 1·00 | 0·51 | 1·53 | 4·00 | | | | 0·27 | 2·33 | 0·17 |
| | | Cooch Behar | 0·18 | 1·30 | 1·36 | 2·66 | 0·16 | | | | 0·10 | 0·38 | 0·33 | 0·43 | 0·30 | 3·02 | 0·40 | | | 0·04 | 1·31 | 0·22 |
| | | Mekliganj | 0·11 | 0·50 | 0·48 | 3·98 | 0·03 | | | | 0·35 | 0·02 | 0·58 | 0·22 | 0·72 | 0·21 | 0·02 | | 0·18 | | 0·12 | 0·08 |
| | | Mathabhanga | 0·28 | 0·27 | 0·68 | 0·83 | 0·05 | | | | 1·01 | | 0·39 | 0·27 | 0·50 | 1·74 | 0·43 | | | 0·03 | 0·35 | 0·30 |
| | | Fulbari* (Tufangunj). | 0·17 | 0·41 | 0·31 | 4·13 | | | | | 1·06 | 0·05 | 1·34 | 0·34 | 0·32 | 4·18 | 0·04 | | | 0·72 | 0·17 | 0·06 |

* Return not received.

DACCA, *the 27th May 1923.*

**FOR THE MONTH OF MAY 1923—*concld.***

| 21 | 22 | 23 | 24 | 25 | 26 | 27 | 28 | 29 | 30 | 31 | Number of rainy days. | Average number of rainy days. | Total rainfall for the month. | Normal rainfall for the month. | Heaviest rainfall during the month. | Total rainfall from 1st March up to 31st May 1923. | Normal rainfall from 1st March up to 31st May 1923. | Station | DISTRICT | DIVISION |
|---|---|---|---|---|---|---|---|---|---|---|---|---|---|---|---|---|---|---|---|---|
| ... | | | 0·04 | . | . | 0 18 | | 0·05 | | | 2 | 5·9 | 0 49 | 4 21 | 0 18 | 1 19 | 5·97 | Malda | Malda | RAJSHAHI—*concld.* |
| . | .. | .. | . | . | ... | | 0·34 | | | 0 85 | 3 | 6 0 | 1 67 | 4 95 | 0 85 | 2 02 | 6 67 | Chanchal | | |
| ... | | . | . | 0·42 | | | | . | 0·45 | . | 3 | 6 0 | 1 12 | 4 43 | 0 15 | 2·02 | 6 21 | Gazol | | |
| ... | | 2·46 | ... | . | . | . | | | | | 3 | 6 7 | 3 22 | 5 33 | 2 46 | 5·13 | 6 99 | Sibganj | | |
| . | ... | . | | . | | | 0 58 | | | | 3 | 7·5 | 1 04 | 5 19 | 0 58 | 1 09 | 7 56 | Gomastapur | | |
| | | | | | | | | | | | | 7 7 | | 4·99 | | | 7 68 | Nawabganj | | |
| . | . | 0·68 | 2 71 | 3 54 | 1 36 | 0·37 | . | | 1 97 | . | 12 | 11 6 | 16 25 | 10 16 | 3 71 | 26 20 | 8 55 | Munshiganj | Dacca | DACCA |
| . | . | 1 24 | 0·64 | 1 39 | 0 78 | 0 45 | 0 24 | | 0 24 | 0 16 | 11 | 11 6 | 7 81 | 10 06 | 1 13 | 14 04 | 17 74 | Dacca | | |
| . | . | 1 22 | 2 84 | 2·00 | 0 55 | 0·29 | | | 0 49 | 0·74 | 12 | 10·0 | 11 74 | 9·01 | 2 84 | 22 52 | 20 09 | Nawabganj | | |
| 0·08 | ... | 0 58 | 1 50 | 1·28 | 0 76 | 0 08 | | | 0 48 | 0 57 | 12 | 11 6 | 8 04 | 10 04 | 1 50 | 19 86 | 18·21 | Narayanganj | | |
| 0 50 | ... | 0·18 | 1·07 | 0 92 | 2·28 | . | | | 0·02 | 0·04 | 10 | 11 7 | 6 95 | 12 15 | 2 34 | 11 69 | 23 11 | Narsingdi | | |
| ... | . | 0·61 | 1·70 | 1·90 | 0·10 | | 0 57 | . | 0 25 | 0 05 | 14 | 11 1 | 11 25 | 9 24 | 2 31 | | 15 56 | Manikganj | | |
| .. | 0·21 | 0 64 | 0 57 | 0 77 | 1·60 | 0 14 | | | | | 11 | 11 8 | 5 64 | 10 45 | 1 60 | 8 98 | 18 30 | Joydebpur | | |
| . | ... | 0·35 | 2 59 | 0 49 | 0 20 | 0 10 | 0 20 | | | | 15 | 11 3 | 9 03 | 9 08 | 2 59 | 16 72 | 18 88 | Kapasia | | |
| | | . | 3·73 | 2 51 | | 0·45 | | | | | 10 | 12 5 | 12 70 | 12 26 | 3 73 | 15 69 | 20 68 | Kishorganj | Mymensingh | |
| . | | 0·75 | 0 55 | 0·04 | 0·71 | 1 10 | | | 0 09 | 0 17 | 9 | 10·6 | 4 44 | 8 61 | 1 10 | 6 45 | 13 49 | Atia (*Tangail*) | | |
| . | | 0 15 | 0·51 | . | | 1 33 | | | | | 6 | 9 5 | 4 59 | 9 29 | 1 50 | 6 43 | 14 57 | Sufabari | | |
| .. | .. | 0 05 | 1 51 | 1 06 | . | 1 00 | | 1 23 | | 0 17 | 11 | 12 7 | 11 66 | 12 59 | 1 51 | 14 23 | 19 87 | Mymensingh | | |
| | | .. | 0·32 | 0·05 | . | 0 78 | | 0·68 | | | 9 | 11 6 | 4 49 | 10 15 | 0 95 | 6 86 | 16·08 | Jamalpur | | |
| 0 01 | .. | 1 10 | 1 55 | 1·21 | | 0 45 | 0·10 | 0 10 | 0 01 | 1 00 | 14 | 13 8 | 13 71 | 14 62 | 4 06 | 17 46 | 23 20 | Netrokona | | |
| . | | 0·56 | 0 16 | | . | 0 50 | | | | | 9 | 9 9 | 4 42 | 9 04 | 1·97 | 6 00 | 13·21 | Phulpur | | |
| .. | | | 1·00 | . | . | . | 2 00 | 0 20 | 0 85 | 0·85 | 11 | 13 6 | 10 11 | 15 70 | 2 00 | | 24 66 | Durgapur | | |
| | .. | | 0·55 | 0 17 | | 0 11 | 0 70 | 1 10 | | | 9 | 12·4 | 7 09 | 11 77 | 3 00 | 11 70 | 18 18 | Sherpur (*Town*) | | |
| .. | | ... | 0·45 | 3 15 | | 0·90 | 0 20 | 3 00 | | | 12 | 11 7 | 15 50 | 12 37 | 5 25 | 33 78 | 17 01 | Dewanganj | | |
| | | 0·10 | 1·00 | 0 80 | | 0 09 | 0·03 | 1 20 | | 1 80 | 9 | 12 8 | 9 12 | 13·21 | 1 80 | 10 91 | 20 27 | Nalitabari | | |
| | | ... | . | 0 24 | 0 19 | | | | | 0 75 | 7 | 10 5 | 3 46 | 8 51 | 1·05 | 13 03 | 15 12 | Madaripur | Faridpur | |
| 1·04 | | | 0·40 | 2 32 | 0 79 | | | | 0 31 | 0 30 | 12 | 11 0 | 9 03 | 8 88 | 2 32 | 15 81 | 15 72 | Faridpur | | |
| 0 93 | | .. | 1 45 | 1 92 | 2·79 | | 0 20 | | 0·30 | 0 68 | 11 | 10 3 | 14 19 | 8 31 | 2 79 | 20 12 | 14 48 | Rajbari (*Goalundo*) | | |
| | | | | | 0 04 | | | | 0·08 | | 8 | 11 7 | 3 40 | 10·91 | 151 | 5 13 | 17 02 | Haridaspur | | |
| | | 0 28 | 0·01 | 0 41 | | | 0 12 | | 0 24 | | 10 | 11 3 | 5 44 | 11·72 | 1 91 | 10 94 | 18 97 | Takerhat | | |
| 0·05 | | | 1 25 | 0·07 | 1 50 | | | 0·01 | 0 14 | 0 07 | 12 | 11 6 | 7 10 | 9 73 | 1 50 | 15 08 | 17 40 | Bhanga | | |
| | | 0·47 | 1·29 | 1·27 | 1 30 | | | 0 24 | 2·00 | | 13 | 10 8 | 13 70 | 8 84 | 2 00 | 20 83 | 14 41 | Pangsa | | |
| | 0·68 | | 1 79 | 1 52 | 2 51 | | | 0 10 | | 0 40 | 13 | 9 8 | 12 51 | 10 77 | 2 51 | 24 50 | 17 79 | Baliakandi | | |
| 0·59 | | | | | 0 32 | | | 0 35 | | 0 34 | 11 | 12 3 | 4 00 | 11 69 | 0 59 | 9 60 | 20 21 | Bhanga | | |
| | | | 0 60 | 0·35 | 0 55 | | | | | | 7 | 14 0 | 4 10 | 13 11 | 1 43 | 9 76 | 23 38 | Palong | | |
| 0 47 | | | | | 0·36 | . | | | 0 09 | | 9 | 9 7 | 3 27 | 10 29 | 0 93 | 5 88 | 16·23 | Patuakhali | Bakarganj | |
| | | | | 1 30 | | | | | | | 7 | 10 4 | 5 21 | 9 90 | 1 90 | 6 98 | 17 14 | Barguna | | |
| 1 03 | | | .. | | 0 46 | | | | 0 30 | | 9 | 9·2 | 3 25 | 8 09 | 1 03 | 6 25 | 12 80 | Pirojpur | | |
| 0 55 | | | 0 12 | | 0 06 | | | | 0 50 | | 7 | 10 0 | 2 83 | 8 56 | 0 50 | 5 88 | 15 03 | Barbal | | |
| | | | | | | | | | | | | 9 6 | | 8 65 | | | 15 30 | Gaurnadi | | |
| | | | | | | | | | | | | 10 3 | | 8 31 | | | 14 77 | Bhola | | |
| 1 48 | | | 0 20 | 0 57 | 1 08 | | | | . | | 9 | 10 3 | 5 15 | 11 02 | 1 58 | 10 20 | 18 36 | Daulatkhan | | |
| . | | | | 0 42 | 0 43 | | | | | | 7 | 9 5 | 4 37 | 10 08 | 1 90 | 7 73 | 15 83 | Bauphal | | |
| 0·01 | | 1·65 | 0 13 | 0·55 | 1·20 | 0 10 | | | | | 9 | 10 0 | 12 30 | 10 71 | 4 78 | 15 67 | 15 28 | Cox's Bazar | Chittagong | CHITTAGONG |
| 0 25 | | 0·07 | 1 30 | 0 90 | 0 08 | | | | | | 10 | 10 8 | 5 97 | 9 82 | 1 30 | 10 85 | 16 92 | Chittagong | | |
| 0 22 | 0·21 | 0 52 | | 0 98 | 0 59 | | | | | | 11 | 9 4 | 7 95 | 11 10 | 1 91 | 11 71 | 16 97 | Kutubdia | | |
| | 0·65 | 0 50 | | | 0·90 | | | | | | 12 | 10 2 | 7 85 | 9 28 | 1 50 | 10 96 | 15 37 | Satkania | | |
| | 0·10 | 0·20 | | | | | | | | | 11 | 11 1 | 4 51 | 10 47 | 0 87 | 6 47 | 18 51 | Kodala | | |
| | 0 42 | ... | 0 45 | 0·30 | 0 25 | | | | | | 11 | 12 0 | 6 10 | 10 67 | 2 30 | 11 73 | 19 26 | Mirsarai | | |
| 0 40 | 0 12 | 0·19 | 0 35 | 1 90 | 3 37 | 0 23 | 0 50 | | | 0 41 | 12 | 12·0 | 9 09 | 12·00 | 3 37 | 13·58 | 20 77 | Comilla | Tippera | |
| . | | 0 10 | 0 74 | | | 0 70 | | 0 33 | 0·70 | | 10 | 11 2 | 7 26 | 9 54 | 1 70 | 12 91 | 17 51 | Chandpur | | |
| . | 0 66 | 0 15 | 1 83 | 2 33 | 0 42 | 0 11 | | | | | 12 | 12·6 | 8·71 | 12 69 | 2 33 | 16 80 | 22 84 | Brahmanbaria | | |
| | 0·61 | 1 33 | 0 50 | 1 00 | 0 70 | 1·02 | | | 0 09 | | 9 | 10 4 | 6 93 | 11 02 | 1 33 | 9·07 | 20 69 | Ramchandrapur | | |
| ... | | 1 93 | | 2 25 | 1 18 | | | | 2 28 | 0 45 | 7 | 11 0 | 10 82 | 13 45 | 2 45 | 15 50 | 25 44 | Nasirnagar | | |
| | 0 42 | 0 45 | 1 41 | 0 63 | 0 22 | 0 36 | | | 0 77 | | 15 | 10 1 | 6 76 | 9 28 | 1 41 | 11 91 | 15·98 | Daudkandi | | |
| | .. | | 1·00 | 1 13 | 0 19 | 0 85 | 0 50 | | | 0 40 | 9 | 11 2 | 5 47 | 11 16 | 1 18 | 9 58 | 21 29 | Kasba | | |
| 1·00 | | 0 25 | | | | | | | | | 4 | 10 7 | 2 53 | 11 42 | 1 00 | | 19 29 | Laksam | | |
| | | | | 0 12 | 2 46 | | | | | 0 02 | 9 | 10 8 | 7 82 | 11 35 | 2 06 | 10 12 | 16 51 | Noakhali | Noakhali | |
| 1·26 | .. | | . | 1 65 | 0 51 | | | | | | 8 | 11 8 | 5 49 | 11 53 | 1 65 | 10 26 | 20 75 | Feni | | |
| 0·06 | | | | 0 37 | | | | | | | 12 | 10 4 | 3 98 | 10 90 | 2 07 | 14 12 | 17 94 | Harishpur | | |
| 1 23 | 0 06 | 0·09 | 0·08 | 0 11 | 1 03 | 0·10 | | | | | 9 | 10 9 | 6 11 | 9 89 | 1 52 | 10 44 | 17 37 | Ramganj | | |
| 1 30 | . | | | 1 15 | 0 45 | | | | | | 11 | 12 4 | 7 38 | 12 05 | 1 88 | 14 78 | 22 90 | Chhagalnaya | | |
| 1 88 | 0·42 | | 0 60 | 0·35 | 2·10 | | | | | | 9 | 11 2 | 7 55 | 10 71 | 2 10 | 16 45 | 18 21 | Hatia | | |
| 1 95 | | | | 0 76 | 3 42 | | | | | | 6 | 11 4 | 7 32 | 10 72 | 3 42 | 9 96 | 19 06 | Lakhmipur | | |
| 0·72 | | 0 06 | ... | 0 42 | 0.01 | 0·06 | | | | | 12 | 11 8 | 11·83 | 10 16 | 2 70 | 15 54 | 17 88 | Rangamati | Chittagong Hill Tracts | |
| ... | . | | | 0 86 | | | | | | | 9 | 12·2 | 7·95 | 10 94 | 1 95 | 14 18 | 18 60 | Bandarban | | |
| .. | .. | ... | 1·20 | 0·50 | | | | | | | 9 | 12 3 | 11 99 | 9 54 | 3 50 | 18·62 | 18·74 | Barkal | | |
| | | 0 40 | 1·69 | | ... | | | | | | 7 | (a) | 5 36 | (a) | 1 61 | 8 15 | (a) | Mahalcheri | | |
| 1·10 | | | 0 88 | 0 02 | 0 29 | | | | | ... | 12 | (a) | 11 91 | (a) | 2 88 | 16 73 | (a) | Lama | | |
| | 0·96 | ... | . | 1 00 | | | | . | | | 7 | (a) | 4 83 | (a) | 1 10 | 8 77 | (a) | Kamarth | | |
| 1·91 | .. | 0·95 | 1·27 | . | | | | .. | | . | 7 | (a) | 3 72 | (a) | 1 27 | | (a) | Dighinala | | |
| | ... | | | 0·81 | 0·15 | .. | . | .. | | | 10 | (a) | 4 77 | (a) | 1 61 | 8 50 | (a) | Manikcheri | | |
| | | | | | | | | | | | .. | .. | . .. | .. | - | 17 06 | 22 71 | . . | Hill Tippera | |
| 0·35 | .. | 1 12 | 0·33 | 0 13 | 0·90 | 0 21 | 0 46 | 3·70 | 3·50 | 2·44 | 21 | 14·5 | 28 67 | 14 02 | 4·00 | 34 07 | 19 98 | Dinhata | Cooch Behar | |
| 1 50 | ... | 0·28 | ... | 1·47 | 0·32 | 3 45 | 0·08 | 0 58 | 1·02 | 1 43 | 22 | 14·0 | 23 73 | 15 66 | 3 45 | 31 95 | 23 38 | Cooch Behar. | | |
| 0 70 | .. | 0·90 | .. | | 0·27 | 0 57 | 0·15 | 1 56 | 0 70 | 1 07 | 20 | 12 9 | 13 56 | 12·01 | 3 98 | 22 95 | 17·07 | Mekliganj | | |
| 1·24 | .. | 0·24 | 0·01 | 0·95 | 1·01 | 1·36 | 0·14 | 0·63 | 1·31 | 0 56 | 21 | 14 2 | 14·87 | 13·42 | 1 74 | 20 31 | 19 52 | Mathabhanga | | |
| 2·30 | .. | 0·12 | 0·06 | 1·07 | 1 39 | 2·23 | 0·11 | 0·91 | 0·83 | 0 84 | 20 | 15 6 | 23·08 | 16 47 | 4 18 | 31 47 | 21 72 | Fulbari (*Tufanganj*) | | |

(a) Not ascertained.

J. C. ROY, for *Director of Agriculture, Bengal.*

**IRRIGATION DEPART**

***Statement showing heights over mean sea-level and low water in the rivers Ganges, reading of each gauge over M. S. L. as***

RIVER GANGES

| Date. | Mirzapur Zero of gauge 206 22 ft | | | Benares. Zero of gauge 196 80 ft | | Buxar. Zero of gauge 167 55 ft. | | Dinapore. Zero of gauge 134 23 ft | | Monghyr. Zero of gauge is at mean sea-level. | |
|---|---|---|---|---|---|---|---|---|---|---|---|
| Distance in miles. | From Allahabad, 86 | | | From Allahabad, 134 | From Mirzapur, 48 | From Benares, 90 | | From Benares, 177. | From Buxar, 87 | From Benares, 287. | From Dinapore, 110 |
| Highest gauge reading. | 2nd September 1916 265 97. | | | 2nd September 1916. 244 30 | | 3rd and 4th September 1916 200 80 | | 5th September 1901. 169·73 | | 8th September 1901. 128·19. | |
| Lowest gauge reading. | 28th June 1897. 187 30 | | | 1st May 1877. 182 80. | | 10th to 14th May 1914. 159 30 | | 20th April 1912. 135 13. | | 29th April to 6th May 1914. 94 59. | |
| | | Height over zero of gauge | Height over mean sea-level | Height over zero of gauge | Height over mean sea-level | Height over zero of gauge | Height over mean sea-level. | Height over zero of gauge | Height over mean sea level | Height over zero of gauge. | Height over mean sea-level. |
| 1 | 2 | 3 | 4 | 5 | 6 | 7 | 8 | 9 | 10 | 11 | 12 |
| 1st ... | ... | 2 58 | 208 80 | 0 67 | 197 47 | 3 42 | 170 97 | 9 80 | 144 03 | 100·90 | 100 90 |
| 2nd ... | .. | 2 58 | 208 80 | 0 67 | 197 47 | 3 33 | 170 88 | 9 80 | 144 03 | 100·90 | 100 90 |
| 3rd ... | ... | 2 58 | 208 80 | 0 75 | 197 55 | 3 25 | 170 80 | 9 80 | 144·03 | 101 00 | 101·00 |
| 4th ... | ... | 2 79 | 209 01 | 0 83 | 197 63 | 3 25 | 170 80 | 9 80 | 144 03 | 101 00 | 101 00 |
| 5th ... | ... | 2 92 | 209 14 | 0 83 | 197 63 | 3 25 | 170·80 | 9 80 | 144·03 | 101 10 | 101 10 |
| 6th ... | . | 3 62 | 209 84 | 1 00 | 197·80 | 3 25 | 170 80 | 9 80 | 144 03 | 101 30 | 101 30 |
| 7th ... | ... | 3 92 | 210 14 | 1 25 | 198·05 | 3 25 | 170 80 | 9 80 | 144·03 | 101 40 | 101 40 |
| 8th ... | ... | 4 25 | 210 47 | 2 00 | 198 80 | 3 17 | 170 72 | 9 80 | 144 03 | 101 40 | 101 40 |
| 9th ... | ... | 4 50 | 210 72 | 2 08 | 198 88 | 3 17 | 170 72 | 9·80 | 144 03 | 101 30 | 101 30 |
| 10th ... | .. | 4 67 | 210 89 | 2 17 | 198 97 | 3 42 | 170 97 | 9 80 | 144 03 | 101 10 | 101 10 |
| 11th ... | ... | 4 67 | 210 89 | 2·17 | 198 97 | 3 42 | 170 97 | 9 80 | 144 03 | 101 00 | 101 00 |
| 12th .. | ... | 4 58 | 210 80 | 2·25 | 199 05 | 3 42 | 170 97 | 9 60 | 143 83 | 101 00 | 101 00 |
| 13th .. | .. | 4 67 | 210 89 | 2 17 | 198 97 | 3 67 | 171 22 | 9 50 | 143 73 | 101 00 | 101 00 |
| 14th .. | | 4 75 | 210 97 | 2 00 | 198 80 | 3 83 | 171 38 | 9 50 | 143·73 | 101 00 | 101 00 |
| 15th | .. | 4 83 | 211 05 | 1 92 | 198 72 | 3 83 | 171 38 | 9 50 | 143·73 | 101 00 | 101 00 |
| 16th ... | ... | 4 83 | 211 05 | 1 92 | 198 72 | 3·92 | 171 47 | 9·40 | 143·63 | 101 00 | 101 00 |
| 17th ... | .. | 4 83 | 211 05 | 1 83 | 198 63 | 3 92 | 171 47 | 9 40 | 143·63 | 100 90 | 100 90 |
| 18th ... | ... | 4 75 | 210 97 | 1 83 | 198 63 | 3 92 | 171 47 | 9 30 | 143 53 | 100 80 | 100 80 |
| 19th ... | ... | 4 67 | 210 89 | 1 75 | 198 55 | 3 92 | 171·47 | 9 30 | 143 53 | 100 70 | 100·70 |
| 20th ... | ... | 4 62 | 210 84 | 1 75 | 198 55 | 3·92 | 171·47 | 9 30 | 143 53 | 100·70 | 100 70 |
| 21st ... | ... | 4 62 | 210·84 | 1·75 | 198 55 | 3 92 | 171 47 | 9 20 | 143·43 | 100 60 | 100 60 |
| 22nd ... | ... | 4 62 | 210 84 | 1 67 | 198 47 | 3 92 | 171 47 | 9 20 | 143 43 | 100·50 | 100 50 |
| 23rd ... | ... | 4·62 | 210 84 | 1 67 | 198 47 | 3 67 | 171 22 | 9 20 | 143·43 | 100·50 | 100 50 |
| 24th ... | ... | 4 62 | 210 84 | 1·67 | 198·47 | 3 58 | 171 13 | 9·20 | 143 43 | 100 40 | 100 40 |
| 25th ... | ... | 4 54 | 210 76 | 1 58 | 198 38 | 3 58 | 171·13 | 9 20 | 143 43 | 100·40 | 100·40 |
| 26th ... | ... | 4 54 | [illegible] | [illegible] | [illegible] | [illegible] | [illegible] | [illegible] | [illegible] | [illegible] | [illegible] |
| 27th ... | ... | 4 54 | 210 76 | 1 58 | 198 38 | 3 58 | 171·13 | 9 20 | 143·43 | 100·30 | 100·30 |
| 28th ... | ... | 4·54 | 210 76 | 1 50 | 198·30 | 3·58 | 171 13 | 9 20 | 143·43 | 100·30 | 100 30 |
| 29th ... | . .. | 4 46 | 210 68 | 1·50 | 198 30 | 3 42 | 170·97 | 9 20 | 143 43 | 100 30 | 100·30 |
| 30th ... | ... | 4 46 | 210 68 | 1 42 | 198 22 | 3·25 | 170 80 | 9 20 | 143·43 | 100·30 | 100 30 |
| 31st ... | ... | 4·46 | 210 68 | 1 42 | 198.22 | 3 25 | 170 80 | 9 20 | 143 43 | 100·20 | 100 20 |

*The 3rd July 1923.*

**MENT, BENGAL.**

***Bhagirathi, Jalangi and Brahmaputra for the month of March 1923, and the highest as well as the lowest gauge reading since 1876.***

| | | | | | | RIVER BHAGIRATHI | | RIVER JALANGI | | RIVER BRAHMAPUTRA | |
|---|---|---|---|---|---|---|---|---|---|---|---|
| Rajmahal. Zero of gauge is at 56·319. | | Rampur-Boalia Zero of gauge 1·51 ft | | Goalundo Zero of gauge is 4 896 ft. above mean sea-level. | | Berhampore. Zero of temporary gauge 31 509 | | Swarupganj. Zero of gauge 1·509 | | Gauhati Zero of gauge 135 18 | |
| From Benares, 407. | From Monghyr, 120. | From Benares, 471. | From Rajmahal, 64. | From Benares, 591. | From Rampur-Boalia, 120. | | | | | | |
| 15th August 1913. 67 317. | | 26th August 1879. 26·76. | | 28th August 1906 and 14th September 1915. 30 646 | | 14th August 1890 63·459 | | 25th September 1900 34 109. | | 24th August 1908. 167·53 | |
| 2nd May 1910. 58·559. | | 23rd April 1886. —1·43. | | 28th March 1910 7·146 | | 19th to 24th April 1917 33·909. | | 28th March 1915 1 209 | | 9th February 1888. 128 88 | |
| Height over zero of gauge. | Height over mean sea level. | Height over zero of gauge | Height over mean sea level. | Height over zero of gauge. | Height over mean sea-level | Height over zero of gauge | Height over mean sea-level. | Height over zero of gauge | Height over mean sea level | Height over zero of gauge | Height over mean sea-level |
| 13 | 14 | 15 | 16 | 17 | 18 | 19 | 20 | 21 | 22 | 23 | 24 |
| | | | | | | | | | | Below zero | |
| 7 45 | 63 769 | 35 09 | 36 60 | 5 80 | 10 696 | 3 60 | 35 109 | 2 29 | 3 799 | 3 80 | 131 38 |
| 7 45 | 63 769 | 35·14 | 36 65 | 6 00 | 10 896 | 3 50 | 35 009 | 2 42 | 3 929 | 4 00 | 131 18 |
| 7 50 | 63 819 | 35·14 | 36 65 | 6 20 | 11 096 | 3 50 | 35 009 | 3 33 | 4 839 | 4·10 | 131 08 |
| 7 50 | 63 819 | 35 14 | 36 65 | 6 50 | 11·396 | 3 50 | 35 009 | 3 36 | 4 869 | 4 10 | 131 08 |
| 7 55 | 63 869 | 35 19 | 36 70 | 6 60 | 11 496 | 3·50 | 35 009 | 3 65 | 5 159 | 4 20 | 130 98 |
| 7 60 | 63 919 | 35 19 | 36 70 | 6 80 | 11 696 | 3 50 | 35 009 | 3 83 | 5 339 | 4 10 | 131 08 |
| 7 65 | 63 969 | 35 24 | 36 75 | 6 70 | 11 596 | 3 50 | 35 009 | 3 76 | 5·269 | 4 10 | 131 08 |
| 7·70 | 64 019 | 35 29 | 36 80 | 6 60 | 11 496 | 3 50 | 35 009 | 3 47 | 4 979 | 4 00 | 131 18 |
| 7 75 | 64 069 | 35 34 | 36 85 | 6 40 | 11 296 | 3 40 | 34 909 | 3 05 | 4 659 | 4 00 | 131 18 |
| 7 75 | 64 069 | 35 39 | 36 90 | 6 20 | 11 096 | 3 40 | 34 909 | 2·71 | 4 219 | 4 10 | 131 08 |
| 7 80 | 64 119 | 35 49 | 37 00 | 6 00 | 10 896 | 3 40 | 34 909 | 2 50 | 4 009 | 4 10 | 131 08 |
| 7 70 | 64 019 | 35 54 | 37 05 | 5 70 | 10 596 | 3 40 | 34 909 | 2 42 | 3 929 | 4 20 | 130·98 |
| 7 60 | 63 919 | 35·49 | 37 00 | 5 70 | 10 596 | 3 40 | 31 909 | 2 29 | 3 799 | 4 20 | 130 98 |
| 7 60 | 63 919 | 35 44 | 36 95 | 5 70 | 10 596 | 3 40 | 34 909 | 2 30 | 3 809 | 4·10 | 131 08 |
| 7 55 | 63 869 | 35 39 | 36 90 | 5 90 | 10 796 | 3 40 | 34 909 | 2 38 | 3 889 | 3 90 | 131·28 |
| 7 50 | 63 819 | 35 34 | 36 85 | 6 10 | 10·996 | 3 40 | 34 909 | 2 53 | 4 039 | 3 90 | 131 28 |
| 7·45 | 63 769 | 35 29 | 36 80 | 6 20 | 11 096 | 3 40 | 34 909 | 2 63 | 4 139 | 3 80 | 131 38 |
| 7 40 | 63 719 | 35 24 | 36 75 | 6 40 | 11 296 | 3 40 | 34 909 | 2 75 | 4 259 | 3 80 | 131 38 |
| 7 35 | 63·669 | 35·19 | 36 70 | 6 60 | 11 496 | 3 40 | 34 909 | 2 84 | 4 349 | 3 90 | 131 28 |
| 7 35 | 63·669 | 35 14 | 36·65 | 6 50 | 11 396 | 3 40 | 34 909 | 2 91 | 4 419 | 3 70 | 131 48 |
| 7 30 | 63 619 | 35 09 | 36 60 | 6 50 | 11 396 | 3 30 | 34 809 | 2 94 | 4 449 | 3 60 | 131 58 |
| 7 25 | 63 569 | 35 09 | 36 60 | 6 50 | 11 396 | 3 30 | 34·809 | 2 96 | 4 469 | 3·60 | 131 58 |
| 7 20 | [illegible] | | | [illegible] | [illegible] | [illegible] | [illegible] | [illegible] | [illegible] | 3 70 | 131 48 |
| 7 10 | 63·419 | 35 04 | 36·55 | 6 30 | 11 196 | 3 55 | 35 059 | 2 58 | 4 089 | 3·60 | 131 58 |
| 7 00 | 63 319 | 34 99 | 36 50 | 6 10 | 10 996 | 3 55 | 35 059 | 2 41 | 3·919 | 3 70 | 131 48 |
| 7·00 | 63 319 | 34·89 | 36 40 | 5 90 | 10 796 | 3 55 | 35·059 | 2 26 | 3 769 | 3 70 | 131 48 |
| 6 95 | 63 269 | 34 74 | 36 25 | 5 80 | 10·696 | 3 55 | 35 059 | 2 40 | 3 909 | 3 80 | 131·38 |
| 6·95 | 63·269 | 34 69 | 36 20 | 5·70 | 10 596 | 3·55 | 35·059 | 2 59 | 4 009 | 3 80 | 131·38 |
| 6 90 | 63·219 | 34 64 | 36·15 | 5 70 | 10 596 | 3 50 | 35 009 | 2·51 | 4 019 | 3 70 | 131 48 |
| 6 85 | 63 169 | 34 64 | 36 15 | 5 80 | 10 696 | 3 50 | 35·009 | 2 63 | 4·139 | 3 70 | 131·48 |
| 6·80 | 63 119 | 34 69 | 36 20 | 6 10 | 10 996 | 3 50 | 35 009 | 2 96 | 4 469 | 3 60 | 131 58 |

A. G. MAFLIN,

*Personal Assistant to the Chief Engineer and Secretary to the Government of Bengal.*

## IRRIGATION DEPARTMENT, BENGAL.

### Irrigation operations for the official year 1922-24.

*Area leased for irrigation up to end of May 1923.*

| Circle. | District. | Canal | Estimated full discharge. | Average discharge in month. | Discharge utilised | Approximate area of land irrigated during the year up to the end of the month. | Approximate area of land under irrigation up to the same date last year. | Details of areas leased: Long-term leases | Season leases: Kharif. | Rabi. | Sugarcane. | Hot weather. | Total. | Grand total. | Rainfall, 1922-24: During month. | Up to end of month. | Rainfall, 1922-23: During month. | Up to end of month. |
|---|---|---|---|---|---|---|---|---|---|---|---|---|---|---|---|---|---|---|
| | | | C. ft | C. ft. | C. ft. | Acres | Acres. | Acres | Acres. | Acres | Acres | Acres | Acres. | Acres | Inches | Inches. | Inches | Inches. |
| S.-W Circle | Midnapore ... | Midnapore ... | 1,411 | ... | ... | ... | .. | 62,587 | ... | ... | ... | ... | ... | 62 587 | 3 46 | 5 11 | 0 91 | 1·77 |
| | | Parchkura ... .. | 522 | ... | .. | ... | ... | 6 099 | ... | ... | ... | ... | ... | 6,099 | 5·35 | 6·65 | 1·50 | 3·32 |
| | Howrah ... | Tidal Reaches, Ranges I and II | .. | .. | .. | ... | ... | ... | ... | ... | .. | ... | ... | ... | 2 29 | 2·58 | 4·34 | 5·91 |
| | | Total Midnapore Canal ... | .. | ... | ... | ... | ... | 68 686 | ... | ... | ... | ... | ... | 68,686 | ... | ... | ... | ... |
| | | Total of the corresponding period last year | .. | ... | ... | ... | ... | 71 117 | 10 | ... | ... | ... | 10 | 71,127 | ... | ... | ... | ... |
| | Burdwan and Hooghly. | Eden Canal .. ... | 1,000 | 125 | 1 | ... | . | 15,302 | 533 | 7 | 25 | ... | 565 | 15,867 | 2·86 | 3 27 | 3·99 | 4·16 |
| | | Total of the corresponding period last year | ... | ... | ... | ... | ... | 18,345 | ... | 2 | 13 | ... | 15 | 18,360 | ... | ... | ... | ... |
| | | GRAND TOTAL ... | ... | ... | .. | ... | ... | 83,988 | 533 | 7 | 25 | ... | 565 | 84 553 | ... | ... | ... | ... |
| | | GRAND TOTAL OF THE CORRESPONDING PERIOD OF LAST YEAR. | ... | ... | ... | ... | ... | 89,462 | 10 | 2 | 13 | ... | 25 | 89,487 | ... | ... | .. | ... |

CALCUTTA, the 3rd July 1923.

A. G. MAFLIN,
*Personal Assistant*
*to the Secretary to the Government of Bengal.*

REGISTERED No. C 337. No. 28 of 1923.

# The Calcutta Gazette

WEDNESDAY, JULY 11, 1923.

CONTENTS


| | Page. |
|---|---|
| PART I.—Orders and Notifications by the Governor of Bengal, the Government of Bengal, the High Court, Government Treasury, etc. .. .. | 915—959 |
| PART IA.—Orders and Notifications by the Government of India . ... ... .. | 213—217 |
| PART IB.—Educational Notices ... . ... ... | 339—491 |
| PART II.—Advertisements .. .. ... | 805—822 |
| PART III.—Acts of the Bengal Legislative Council | Nil |
| PART IV.—Bills introduced in the Bengal Legislative Council, Reports of Select Committees presented or to be presented to that Council, and Bills published before introduction in that Council . | Nil |
| PART V.—Acts of the Indian Legislature assented to by the Governor-General .. | Nil |
| PART VI.—Bills introduced in the Council of State and Legislative Assembly, Reports of Select Committees presented to the Council and Assembly, and Bills published under Rule 18 of the Indian Legislative Rules . . .. ... | Nil |
| SUPPLEMENT No 28— | |
| Circular and Eastern Canals—Daily gauge-readings—Weather and Crop Report—Local areas—Weekly gauge-readings—Sea level gauge readings—Salt statement .. ... | 829—852 |


## PART I.

***Orders and Notifications By the Governor of Bengal, the Government of Bengal, the High Court, Government Treasury, etc.***

### ORDERS BY HIS EXCELLENCY THE GOVERNOR OF BENGAL.

**Tour Programme of**

**HIS EXCELLENCY THE GOVERNOR OF BENGAL**

**during July 1923.**

| Date and day. | Standard time. | Station. | Remarks. |
|---|---|---|---|
| July. | HOURS. | | |
| 12th, Thursday ... | 21-51 | Leave Calcutta ... | By special train. |
| 13th, Friday ... | 5-35 | Arrive Goalundo. | |

| Date and day. | Standard time. | Station. | Remarks. |
|---|---|---|---|
| July. | HOURS. | | |
| 13th, Friday ... | 7-30 | Leave Goalundo ... | By *Rhotas.* |
| | 16-0 | Arrive Dacca. | |

NOTE.—(1) The party accompanying His Excellency will be—

Lieutenant-Colonel J. Mackenzie, C.I.E., Military Secretary.
Mr H R. Wilkinson, I.C.S., Private Secretary.
Major E. H. V. Hodge, I.M.S., Surgeon.*
Captain S. B. Horn, M.C., Aide-de-Camp.
Captain G. B. Fyldes, M C., Aide-de-Camp.
Captain D. W. M. Prinsep, Extra Aide-de-Camp.

(2) Letters and telegrams for the party should be addressed to the Governor's Camp, Bengal, *without the addition of the name of any post town.*

(3) All arrivals and departures will be private

* Will arrive from Darjeeling
*N B* —The time of arrival at Dacca is approximate

J. MACKENZIE, LIEUT.-COLONEL,
*Military Secretary to H. E. the Governor of Bengal.*

GOVERNMENT HOUSE, CALCUTTA, *the 29th June 1923.*

*No 1595L, dated Calcutta, the 5th July, 1923.*—In exercise of the power conferred by section 72B, sub-section (2), of the Government of India Act, His Excellency the Governor declared the Bengal Legislative Council prorogued on the 5th July, 1923.

C. TINDALL,
*Secretary to the Government of Bengal and*
*Secretary to the Bengal Legislative Council.*

## ORDERS BY THE GOVERNMENT OF BENGAL.

No. 7127A.

### APPOINTMENTS AND TRANSFERS.

GENERAL.—*No. 6675A.- The 4th July 1923.*—Babu Shymapada Bhattacharji, Sub-Deputy Collector, on leave, is posted to the Burdwan Division.

Burdwan Divn.

*No. 7004A.—The 5th July 1923.*—Babu Nepal Chandra Sen, Deputy Magistrate and Deputy Collector, on leave, is appointed to have charge of the Basirhat subdivision of the 24-Parganas district.

24-Parganas.

*No. 7007A —The 5th July 1923.*—Babu Ashutosh Datta, Deputy Magistrate and Deputy Collector, Basirhat, 24-Parganas, is appointed to have charge of the Tamluk subdivision of the Midnapore district.

24-Parganas.
Midnapore.

*No. 7010A.—The 5th July 1923.*—Babu Satish Chandra Mazumdar, Deputy Magistrate and Deputy Collector, Tamluk, Midnapore, is appointed to have charge of the Sadar subdivision of the Chittagong district.

Midnapore.
Chittagong.

*No. 7013A.—The 5th July 1923 —*Babu Harendra Kumar Ghosh, Deputy Magistrate and Deputy Collector, Chittagong, is transferred to the headquarters station of the Faridpur district.

Chittagong.
Faridpur.

*No. 7016A.—The 5th July 1923.*—Maulvi Adiluzzaman Khan, Deputy Magistrate and Deputy Collector, Faridpur, is transferred to the headquarters station of the Tippera district.

Faridpur.
Tippera.

*No. 7094A.—The 7th July 1923.*—Babu Uma Prasanna Guha, Deputy Magistrate and Deputy Collector, on leave, is posted to the headquarters station of the Bakarganj district.

**Bakarganj.**

POLICE.—*No. 6682A.—The 4th July 1923.*—Mr. Azizul Huq Chaudhuri, Superintendent of Police, is appointed to be Additional Superintendent of Police, Faridpur, and under the provisions of section 1 of Act V of 1861, to perform the duties of a Superintendent of Police in that district.

**Faridpur.**

*No. 7074A.—The 6th July 1923.*—Babu Narendra Chandra Bhattacharji, Deputy Superintendent of Police, Bakarganj, is appointed to act as Additional Superintendent of Police, Dacca, during the absence, on leave, of Mr. H. E. Hansen, or until further orders.

**Bakarganj. Dacca.**

He is also appointed under the provisions of section 1 of Act V of 1861 to perform the duties of a Superintendent of Police in that district.

**RESIGNATION.**

GENERAL.—*No. 6602A.—The 2nd July 1923.*—Mr. J. A. Ross is permitted to resign His Majesty's Indian Civil Service with effect from the 24th June 1923.

**LEAVE.**

GENERAL.—*No. 6607 A.—The 2nd July 1923.*—Maulvi Nuruddin Ahmad, Sub-Deputy Collector, is allowed leave on average pay for twenty-one days, under article 81 (*b*) (*ii*) of the Fundamental Rules, in extension of the leave granted to him under the orders of the 15th May 1923.

*No. 6673A.—The 4th July 1923.*—Babu Shyamapada Bhattacharji, Sub-Deputy Collector, is allowed leave on average pay for two months, under article 81 (*b*) (*ii*) and the proviso thereunder of the Fundamental Rules, in extension of the leave granted to him under the orders of the 6th November 1922.

*No. 7069A.—The 6th July 1923.*—In modification of the orders of the 6th April 1922, Mr. A. Mellor, I.C.S., is allowed leave on average pay for eight months and twenty-nine days (including five months and eighteen days on account of privilege leave at credit), under article 81 (*b*) (*i*) of the Fundamental Rules, with effect from the 7th April 1922.

POLICE.—*No. 7072A.—The 6th July 1923.*—Mr. H. E. Hansen, officiating Additional Superintendent of Police, Dacca, is allowed leave on average pay for two months, under article 81 (*b*) (*i*) of the Fundamental rules, with effect from the 13th June 1923.

**Dacca.**

L. BIRLEY,

*Chief Secretary to the Government of Bengal.*

---

NOTIFICATION.

*No. 6624A.—The 3rd July 1923.*—The Reverend Sashi Bhusan Pramanik, a Minister of the London Missionary Society at Gosaba, in the district of the 24-Parganas, is authorised, under section 6 of Act XV of 1872, to solemnize marriages between persons one or both of whom is or are a Christian or Christians and, under section 9 of the Act, to grant certificates of marriages between persons who are native Christians.

**24-Parganas.**

L. BIRLEY,

*Chief Secretary to the Government of Bengal.*

---

NOTIFICATION.

*No. 2A.R.—The 2nd July 1923.*—In exercise of the power conferred by clauses (*2*) (*c*) and (*5*) of Regulation V of the Bengal Electoral Regulations, published with notification No. 6436A., dated the 29th June 1923, the Governor in Council is pleased to appoint, for the constituencies of the Bengal Legislative Council named below, the registering authority noted against each:—

| | |
|---|---|
| 1. The Dacca and Chittagong (European) Constituency | ... The Commissioner of Dacca |
| 2. A Commerce and Industry Constituency | ... The Secretary to the Association, Chamber or Sava comprising the Constituency |

L. BIRLEY,

*Chief Secretary to the Government of Bengal.*

## NOTIFICATION.

*No. 14A.R.—The 2nd July 1923.*— n exercise of the power conferred by clause (*5*) of Regulation V of the Bengal Electoral Regulations published with notification No. 6436A., dated the 29th June 1923, read with rule 13 of the Legislative Assembly Electoral Rules, as amended by the Government of India, Legislative Department, notification No. F.213-1-23, dated the 5th June 1923 (published in the *Gazette of India Extraordinary*, dated the 9th June 1923); the Governor in Council is pleased to appoint for the constituencies of the Legislative Assembly named below the registering authority noted against each :—

| | | |
|---|---|---|
| 1. | Calcutta (Non-Muhammadan) ... | Chairman, Calcutta Corporation. |
| 2. | Calcutta Suburbs (Non-Muhammadan). | The Magistrate of Howrah. |
| 3. | Calcutta and Suburbs (Muhammadan). | Chairman, Calcutta Corporation. |
| 4. | A general constituency comprising a division. | Commissioner of the Division. |
| 5. | Bengal (European) ... | Member, Board of Revenue, Bengal. |
| 6. | Bengal Landholders ... | Ditto. |
| 7. | Chittagong and Rajshahi Divisions (Non-Muhammadan). | Commissioner, Rajshahi Division. |
| 8. | Burdwan and Presidency Divisions (Muhammadan) | Commissioner, Presidency Division. |
| 9. | Bengal Marwari Association ... | Secretary to the Bengal Marwari Association. |

L. BIRLEY,
*Chief Secretary to the Government of Bengal.*

## NOTIFICATION.

*No. 24A.R.—The 2nd July 1923.*—In exercise of the powers conferred by regulations II and III of the Bengal Electoral Regulations, published with notification No. 6436A., dated the 29th June 1923, read with rule 13 of the Legislative Assembly Electoral Rules as amended by the Government of India, Legislative Department, notification No. F-213, dated the 5th June 1923, and in supersession of the Government of Bengal notification No. 1773A.R., dated the 11th August 1920, the Governor in Council is pleased to appoint for the constituencies of the Legislative Assembly noted in column 1 below, the Returning Officer shown against each in column 2 and other persons mentioned in column 3 who are authorised, subject to the control of the Returning Officer, to perform the functions of the Returning Officer for the constituency in the absence of the Returning Officer in column 2 :—

| Name of constituency. | Returning Officer. | Other persons authorised to perform the functions of Returning Officer. |
|---|---|---|
| 1 | 2 | 3 |
| 1. Calcutta (Non-Muhammadan) .. | The Chief Presidency Magistrate. | Other stipendiary Presidency Magistrates and the 1st and 2nd Municipal Magistrates, Calcutta. |
| 2. Calcutta Suburbs (Non-Muhammadan) | Ditto ... | Ditto. |
| 3 Calcutta and Suburbs (Muhammadan) | Ditto ... | Ditto |
| 4. A general constituency comprising a division. | Commissioner of the Division | Personal Assistant to the Commissioner |
| 5. Chittagong and Rajshahi Divisions (Non-Muhammadan) | Commissioner of the Rajshahi Division | Ditto. |
| 6. Burdwan and Presidency Divisions (Muhammadan). | Commissioner of the Presidency Division. | Ditto. |
| 7. Bengal (European) ... | Member of the Board of Revenue | Secretary to the Board of Revenue. |
| 8. Bengal Landholders' ... | Ditto ... | Ditto. |
| 9. Bengal Marwari Association ... | Joint Secretary, Bengal Marwari Association. | Personal Assistant to Secretary, Bengal Marwari Association. |

L. BIRLEY,
*Chief Secretary to the Government of Bengal.*

## NOTIFICATION.

*No. 45A.R.—The 2nd July 1923.*—In exercise of the powers conferred by clause (2) of Regulation I of the Bengal Electoral Regulations published with notification No. 6436A., dated the 29th June 1923, and in supersession of the Government of Bengal notification No. 1082A.R., dated the 27th September 1920, the Governor in Council is pleased to appoint the officers named below to perform all the duties of an attesting officer under the said regulations :—

All District and Sessions Judges.
All District Magistrates.
The Chief Presidency Magistrate, Calcutta.
The Chairman, Calcutta Corporation.
The Collector of Calcutta.
All Subordinate Judges.
All Subdivisional Magistrates.
All Munsifs.
The Deputy Commissioner, Chittagong Hill Tracts
The Political Agent, Tripura State

L. BIRLEY,
*Chief Secretary to the Government of Bengal*

## NOTIFICATION

*No 574A R—The 2nd July 1923*—In exercise of the powers conferred by clause (2) of Regulation I of the Bengal Electoral Regulations published with notification No 6436A, dated the 29th June 1923, read with rule 13 of the Legislative Assembly Electoral Rules as amended by the Government of India, Legislative Department, notification No F-213-1-23, dated the 5th June 1923, and in supersession of the Government of Bengal, notification No. 1083A.R D, dated the 27th September 1920, the Governor in Council is pleased to appoint the officers named below to perform all the duties of an attesting officer for the purpose of the election of members from the Presidency of Bengal to the Legislative Assembly —

All District and Sessions Judges.
All District Magistrates
The Chief Presidency Magistrate, Calcutta
The Chairman, Calcutta Corporation.
The Collector of Calcutta.
All Subordinate Judges
All Subdivisional Magistrates.
All Munsifs.
The Deputy Commissioner, Chittagong Hill Tracts.
The Political Agent, Tripura State.

L. BIRLEY,
*Chief Secretary to the Government of Bengal*

## POLITICAL DEPARTMENT.

## NOTIFICATION.

*No. 6240 P.—The 10th July 1923.*—In exercise of the power conferred by section 14 of the Code of Criminal Procedure, 1898 (Act V of 1898), the Governor in Council is pleased to confer upon Rai Sahib Mahendra Nath Gupta, Deputy Magistrate, Nadia, power to try the case Emperor *versus* Dadu Mea, under section 124 A, Indian Penal Code.

L. BIRLEY,
*Chief Secretary to the Government of Bengal.*

## POLICE DEPARTMENT.

### NOTIFICATIONS.

*No. 2047Pl.—The 3rd July 1923.*—Whereas the Governor in Council has reason to believe that the members of a gang of dacoits and burglars ordinarily residing in the jurisdiction of police-station Badarganj in the district of Rangpur, and of police-station Parbatipur, in the district of Dinajpur, and commonly known as Urdi Sonar's gang, are addicted to the systematic commission of non-bailable offences:

Rangpur. Dinajpur.

Now, therefore, the Governor in Council, in exercise of the power conferred by section 3 of the Criminal Tribes Act, 1911 (III of 1911), hereby declares the said gang to be a criminal tribe for the purposes of that Act.

*No. 2048Pl.—The 3rd July 1923.*—In exercise of the power conferred by section 10 of the Criminal Tribes Act, 1911 (III of 1911), the Governor in Council hereby directs that every registered member of Urdi Sonar's gang, which has been declared by notification No. 2047Pl., dated the 3rd July 1923, to be a criminal tribe, shall, in the prescribed manner, report himself at fixed intervals and notify his place of residence, and any change or intended change of residence and any absence or intended absence from his residence.

Rangpur. Dinajpur.

*No 2105Pl.—The 7th July 1923.*—Whereas the Governor in Council has reason to believe that the members of a gang of dacoits and burglars ordinarily residing in the jurisdiction of police-stations Mangalkote, Shahebganj and Katwa, in the district of Burdwan, and commonly known as Kadu-Molla's gang, are addicted to the systematic commission of non-bailable offences.

Burdwan.

Now, therefore, the Governor in Council, in exercise of the power conferred by section 3 of the Criminal Tribes Act, 1911 (III of 1911), hereby declares the said gang to be a criminal tribe for the purposes of that Act

*No. 2106Pl.—The 7th July 1923*—In exercise of the power conferred by section 10 of the Criminal Tribes Act, 1911 (III of 1911), the Governor in Council hereby directs that every registered member of Kadu Molla's gang, which has been declared by notification No. 2105Pl., dated 7th July 1923, to be a criminal tribe, shall, in the prescribed manner, report himself at fixed intervals, and notify his place of residence and any change or intended change of residence and any absence or intended absence from his residence.

L. BIRLEY,

*Chief Secretary to the Government of Bengal.*

## JUDICIAL DEPARTMENT.

### No. 7128A.

#### POWERS.

*No. 6993A—The 5th July 1923.*—Maulvi Ali Reza, Deputy Magistrate, Howrah, is vested with powers under section 133 of the Code of Criminal Procedure.

Howrah.

*No. 7036 4—The 6th July 1923.*—Maulvi Adiluzzaman Khan, Deputy Magistrate, is vested with the powers under sections 110, 186, 190 (*1*) (*c*) and 524 of the Code of Criminal Procedure.

*No. 7044 A.—The 5th July 1923.*—Babu Narendra Nath Lahiri, Subordinate Judge, 24-Parganas, is vested with the powers of an Assistant Sessions Judge and is directed, under the proviso to section 357 of the Code of Criminal Procedure, 1898 (Act V of 1898), to take down evidence in criminal cases in the English language.

24-Parganas.

*No. 7051A.—The 5th July 1923.*—Mr. Kumar Adhikram Mazumdar, Deputy Magistrate, on probation, Jessore, is vested with the powers of a Magistrate of the third class and is directed, under the proviso to section 357 of the Code of Criminal Procedure, to take down evidence in the English language.

Jessore.

L. BIRLEY,

*Chief Secretary to the Government of Bengal.*

**APPOINTMENTS AND TRANSFERS.**

*No. 3755J.—The 29th June 1923.*—In exercise of the powers conferred by sections 14 and 15 and the proviso to section 357 of the Code of Criminal Procedure, 1898 (Act V of 1898), the Governor in Council is pleased—

(*a*) to confer upon Babu Ambica Charan Sen the powers of a Magistrate of the third class, in the district of Burdwan, for a period of three years from the date of this notification,

**Burdwan.**

(*b*) to direct him to sit as a member of the Kalna bench in the said district, and

(*c*) to direct him to take down evidence in the English language.

*No. 3757J.—The 29th June 1923.*—In exercise of the powers conferred by sections 14 and 15 and the proviso to section 357 of the Code of Criminal Procedure, 1898 (Act V of 1898), the Governor in Council is pleased—

(*a*) to confer upon Babu Birendra Kumar Mallick, Kaviraj, the powers of a Magistrate of the third class, in the district of Burdwan, for a period of three years from the date of this notification,

**Burdwan.**

(*b*) to direct him to sit as a member of the Kalna bench in the said district, and

(*c*) to direct him to take down evidence in the English language.

*No. 3794J.—The 30th June 1923.*—Babu Harendra Krishna Mukharji, B.L., is appointed to act as a Munsif in the district of Burdwan, to be ordinarily stationed at the Sadar station but for the present to be employed at Arambagh in the district of Hooghly, until further orders.

**Burdwan. Hooghly.**

*No. 3796J.—The 30th June 1923.*—Babu Khagesh Chandra Mitra, M.Sc., B.L., is appointed to act as a Munsif in the district of Bankura, to be ordinarily stationed at the Sadar station, until further orders.

**Bankura.**

*No. 3801J.—The 2nd July 1923.*—Babu Ramesh Chandra De, M.A., B.L., officiating Additional Munsif of Dacca, now employed as an Additional Munsif at Madaripur, in the district of Faridpur, is appointed to act as an Additional Munsif in the district of Bakarganj, to be employed for the present at Barisal, from the 1st July 1923 till the ensuing civil court vacation.

**Dacca. Faridpur. Bakarganj.**

*No. 3827J.—The 3rd July 1923.*—In exercise of the powers conferred by sections 14 and 15 of the Code of Criminal Procedure, 1898 (Act V of 1898), the Governor in Council is pleased—

(*a*) to confer upon Mr. W. Macwan the powers of a Magistrate of the third class, in the district of the 24-Parganas, for a period of three years from the date of this notification, and

**24-Parganas.**

(*b*) to direct him to sit as a member of the Garulia bench in the said district.

*No. 3865J.—The 3rd July 1923.*—Babu Jitendra Prasad Chatarji, Subordinate Judge of Midnapore, is appointed to be Subordinate Judge of Howrah, in the district of Hooghly, *vice* Babu Durga Kanta Ray, about to retire.

**Midnapore. Hooghly.**

*No. 3867J.—The 3rd July 1923.*—Babu Nani Gopal Mukharji, No. I, Additional Subordinate Judge of Burdwan, is appointed to be Subordinate Judge of Midnapore, *vice* Babu Jitendra Prasad Chatarji, transferred.

**Burdwan. Midnapore.**

*No. 3869J.—The 3rd July 1923.*—Babu Ananga Mohan Lahiri, Munsif, is appointed to act, until further orders, as Subordinate Judge of Mymensingh, *vice* Mr. Bamandas Mukharji, appointed to act as District Judge of Murshidabad.

**Mymensingh.**

*No. 3871J.—The 3rd July 1923.*—Babu Janaki Nath Mukharji, Munsif of Chittagong, is appointed to act as Subordinate Judge, Dacca, *vice* Mr. Prabodh Chandra Basu, acting as Additional District and Sessions Judge, Faridpur, or until further orders.

**Chittagong. Dacca.**

*No. 3873J.—The 3rd July 1923.*—Maulvi Sahabuddin Ahmed, B.L., who was acting as Munsif of Sudharam in the district of Noakhali, is appointed to act as a Munsif in the district of Chittagong, to be ordinarily stationed at the Sadar station, *vice* Babu Janaki Nath Mukharji, on deputation, or until further orders.

**Noakhali. Chittagong.**

*No. 3882J.—The 4th July 1923.*—In exercise of the powers conferred by sections 14 and 15 and the proviso to section 357 of the Code of Criminal Procedure, 1898 (Act V of 1898), the Governor in Council is pleased—

(*a*) to confer upon Rai Sahib Krishna Chandra Ghatak the powers of a Magistrate of the third class, in the district of the 24-Parganas, for a period of three years from the date of this notification, in respect to such cases as may be made over to him within the limits of the Barrackpore subdivision of the said district,

**24-Parganas.**

(*b*) to direct that he shall, in addition to sitting singly, sit as a member of the Kanchrapara bench in the said district, and

(*c*) to direct him to take down evidence in the English language.

*No. 3896J.—The 4th July 1923.*—In exercise of the powers conferred by sections 14 and 15 (and the proviso of section 357) of the Code of Criminal Procedure, 1898 (Act V of 1898), the Governor in Council is pleased—

(*a*) to confer upon each of the gentlemen named below the powers of a Magistrate of the third class, in the district of Dacca, for a period of three years from the date of this notification,

**Dacca.**

(*b*) to direct that the said persons, or any two or more of them, shall sit together as a bench at Naraingan in the said district,

(*c*) to invest the said bench with the powers of a Magistrate of the third class,

(*d*) to direct the said bench to exercise the said powers in such cases, occurring within the limits of the Naraingan Municipality, as may be made over to it, and

(*e*) to direct Babu Mahim Chandra Pal and Mr. Serajuddin Muhammad Diwan to take down evidence in the English language —

Mr. A. L. Godden
Babu Mahim Chandra Pal.
Mr. Serajuddin Muhammad Diwan

*No. 3898J.—The 4th July 1923.*—In exercise of the powers conferred by sections 14 and 15 of the Code of Criminal Procedure, 1898 (Act V of 1898), the Governor in Council is pleased—

(*a*) to confer upon Colonel E A C Hindmarsh the powers of a Magistrate of the second class, in the district of Dacca, for a period of three years from the date of this notification, in respect to such cases as may be made over to him within the limits of the Naraingan subdivision, and

**Dacca.**

(*b*) to direct that he shall, in addition to sitting singly, sit as a member of the Naraingan bench in the said district.

*No. 3900J.—The 4th July 1923.*—In exercise of the powers conferred by sections 14 and 15 and the proviso to section 357 of the Code of Criminal Procedure, 1898 (Act V of 1898), the Governor in Council is pleased—

(*a*) to confer upon Babu Satyendra Kumar Das the powers of a Magistrate of the second class, in the district of Dacca, for a period of three years from the 13th July 1923, in respect to such cases as may be made over to him within the limits of the Sadar subdivision of the said district, and

**Dacca.**

(*b*) to direct that he shall, in addition to sitting singly, sit as a member of the Sadar independent bench in the said district, and

(*c*) to direct him to take down evidence in the English language.

*No. 3904J.—The 4th July 1923.*—In exercise of the powers conferred by sections 14 and 15 of the Code of Criminal Procedure, 1898 (Act V of 1898), the Governor in Council is pleased—

(*a*) to confer upon each of the gentlemen named below the powers of a Magistrate of the third class, in the district of the 24-Parganas, for a period of three years from the date of this notification, and

**24-Parganas.**

(*b*) to direct him to sit as a member of the Barasat bench in the said district :—

(1) Babu Kshirode Nath Mitra.
(2) Babu Sarat Chandra Dutta.

*No. 3908J.—The 4th July 1923.*—In exercise of the powers conferred by sections 14 and 15 of the Code of Criminal Procedure, 1898 (Act V of 1898), the Governor in Council is pleased—

(*a*) to confer upon Babu Pramatha Bhusan Bose the powers of a Magistrate of the third class, in the district of Jessore, for a period of three years from the 13th July 1923, and

**Jessore.**

(*b*) to direct him to sit as a member of the Magura bench in the said district.

*No. 3910J.—The 4th July 1923.*—In exercise of the powers conferred by sections 14 and 15 and the proviso to section 357 of the Code of Criminal Procedure, 1898 (Act V of 1898), the Governor in Council is pleased—

Bakarganj.

(*a*) to confer upon Maulvi Mir Muhammad Ismail the powers of a Magistrate of the third class, in the district of Bakarganj, for a period of three years from the 15th July 1923, in respect to such cases as may be made over to him within the limits of the Dakshin Shabazpore subdivision,

(*b*) to direct that he shall, in addition to sitting singly, sit as a member of the Bhola bench in the said district, and

(*c*) to direct him to take down evidence in the English language.

*No. 3968J.—The 5th July 1923.*—Babu Jogesh Chandra Chatarji, additional Munsif of Serajganj, in the district of Pabna and Bogra, is appointed to be an additional Munsif in the district of Nadia, to be ordinarily stationed at Kushtia and Ranaghat but for the present to be employed at Kushtia

Pabna and Bogra.
Nadia.

*No. 3970J.—The 5th July 1923.*—Babu Jogendra Nath Wadadar, B L., is appointed to act, until further orders, as an additional Munsif in the district of Pabna and Bogra, to be ordinarily stationed at Serajganj.

Pabna.
Bogra.

*No. 3972J.—The 5th July 1923.*—Babu Indu Sekhar Basu, additional Munsif of Kushtia and Ranaghat, now employed at Kushtia, in the district of Nadia, is appointed to be a Munsif in the same district, to be ordinarily stationed at Kushtia, and is vested with the functions of a District Court under section 26, sub-section (*1*) of Act VII of 1889, within the local limits of the Kushtia munsifi

Nadia.

*No 3974J.—The 5th July 1923.*—Babu Jyotish Chandra Neogi, munsif of Iwarganj, in the district of Mymensingh, is appointed to be a munsif in the same district, to be ordinarily stationed at the Sadar station and is vested with the functions of a District Court under section 26, sub-section (*1*) of Act VII of 1889, within the local limits of the Sadar munsifi at Mymensingh

Mymensingh.

*No 3976J.—The 5th July 1923.*—In exercise of the powers conferred by section 14 and the proviso to section 357 of the Code of Criminal Procedure, 1898 (Act V of 1898), the Governor in Council is pleased—

24-Parganas.

(*a*) to confer upon Rai Girish Chandra Datta Bahadur, an Honorary Magistrate of the Diamond Harbour bench, the powers of a Magistrate of the third class, in the district of the 24-Parganas, for the period during which he has been directed to sit as a member of the said bench, in respect to such cases as may be made over to him by the Subdivisional Officer of Diamond Harbour, and

(*b*) to direct him to take down evidence in the English language

*No 3978J.—The 5th July 1923.*—In exercise of the powers conferred by sections 14 and 15 and the proviso to section 357 of the Code of Criminal Procedure, 1898 (Act V of 1898), the Governor in Council is pleased—

Burdwan.

(*a*) to confer upon Babu Jogesh Chandra Mitra the powers of a Magistrate of the third class, in the district of Burdwan, for a period of three years from the date of this notification, in respect to such cases as may be made over to him within the limits of the Katwa subdivision,

(*b*) to direct that he shall, in addition to sitting singly, sit as a member of the Katwa bench in the said district, and

(*c*) to direct him to take down evidence in the English language.

*No 3988J.—The 5th July 1923.*—Babu Narendra Nath Lahiri, Subordinate Judge, is appointed temporarily, on relinquishment of his duties as Registrar and Chief Ministerial Officer, Court of Small Causes, Calcutta, to act as Subordinate Judge of the 24-Parganas, *vice* Mr Nalini Kanta Basu, on deputation.

Calcutta.
24-Parganas.

*No. 3993J.—The 6th July 1923.*—Babu Jitendra Kumar Biswas, Munsif of Karimganj, in the district of Sylhet, is appointed to be a Munsif in the district of Rajshahi, to be ordinarily stationed at Naogaon and is vested with powers to exercise final jurisdiction in the trial of suits for the recovery of rent, under section 153 (*b*) of the Bengal Tenancy Act, VIII of 1885.

Sylhet.
Rajshahi.

LEAVE.

*No. 3850J.—The 20th April 1923*—Babu Jamini Kishore Ray, Munsif under orders of transfer to Dacca, is allowed leave on half average pay for twenty-nine days from the 2nd April 1923, under article 81 (*d*) of the Fundamental Rules, in extension of the leave granted to him under the orders of the 27th January 1923.

Dacca.

*No. 3851J.—The 7th May 1923*—Babu Banku Bihari Chatarji, Munsif of Jangipur, in the district of Murshidabad, is allowed leave on half average pay for the period from the 9th March to the 8th April 1923, under article 81 (*d*) of the Fundamental Rules, and on average pay on medical certificate, from the 9th April to the 8th May 1923, under the proviso to article 81 (*b*) (*ii*) of those rules, in modification of the leave granted to him under the orders of the 4th April 1923.

Murshidabad.

*No. 3852J—The 9th June 1923*—Babu Banku Bihari Chatarji, Munsif of Lalbagh, in the district of Murshidabad, is allowed leave on half average pay from the 9th to the 17th May 1923, under article 81 (*d*) of the Fundamental Rules, in extension of the leave granted to him under the orders of the 7th May 1923.

Murshidabad.

*No 3853J—The 16th June 1923*—Babu Malati Nath Basu, Munsif of Barisal, in the district of Bakarganj, is allowed leave on half average pay for fifteen days under article 81 (*d*) of the Fundamental Rules, in extension of the leave granted to him under the orders of the 21st March 1923

Bakarganj.

*No. 3854J.—The 16th June 1923*—In supersession of the orders of the 1st March 1923, Babu Harijiban Banarji, Munsif of Barasat, in the district of the 24-Parganas, is allowed leave on average pay on medical certificate from the 2nd February to the 29th March 1923, under article 81 (*b*) (*ii*) of the Fundamental Rules

24-Parganas.

*No. 3855J—The 16th June 1923.*—Babu Bipin Bihari Chatarji, Munsif, who was acting as Subordinate Judge of Bogra, in the district of Pabna and Bogra, is allowed leave on average pay on medical certificate for three months, under article 81 (*b*) (*ii*) of the Fundamental Rules, with effect from the 2nd May 1923.

Pabna.
Bogra.

*No. 3856J.—The 18th June 1923*—Babu Upendra Chandra Majumdar, Registrar, Small Cause Court, and Munsif, Munshiganj, in the district of Dacca, is allowed leave on half average pay for two months, under article 81 (*d*) of the Fundamental Rules, with effect from the 4th June 1923

Dacca.

*No. 3857J.—The 19th June 1923*—Babu Jamini Kishore Ray, Munsif of Dacca, is allowed leave on half average pay for five days, under article 81 (*d*) of the Fundamental Rules, in extension of the leave granted to him under the orders of the 20th April 1923.

Dacca.

*No. 3980J.—The 5th July 1923*—Khan Bahadur Abu Nasr Muhammad Ali, Municipal Magistrate, Calcutta, is allowed leave on average pay for four months (entirely on account of privilege leave at his credit), under article 81 (*b*) (*ii*) of the Fundamental Rules, in extension of the leave already granted to him in notification No 2720J, dated the 7th May 1923

Calcutta.

RESIGNATION.

*No. 3798J.—The 30th June 1923*—The Governor in Council is pleased to accept the resignation tendered by Maulvi Saiyid Musum-us-Salihin of his appointment as an Honorary Magistrate of the Dum-Dum bench in the district of the 24-Parganas.

24-Parganas.

*No. 3902J.—The 4th July 1923.*—The Governor in Council is pleased to accept the resignation tendered by Babu Jogesh Chandra Mitra of his appointment as an Honorary Magistrate of the Kalna bench in the district of Burdwan.

Burdwan.

*No. 4047J.—The 9th July 1923.*—The Governor in Council is pleased to accept the resignation tendered by Babu Ram Narayan Datta, an Honorary Magistrate of the Burdwan Independent Bench, Burdwan.

Burdwan.

*No. 4049J.—The 9th July 1923.*—The Governor in Council is pleased to accept the resignation tendered by Mr. B. S. Corbet, an Honorary Magistrate of the Saidpur Regular Bench, in the district of Rangpur.

Rangpur.

POWER.

Bankura.

*No. 3985J.—The 5th July 1923.*—Maulvi Hasibuddin Ahmed, munsif of Bankura, is vested with the functions of a District Court under section 26, sub-section (*1*) of Act VII of 1889, within the local limits of the Sadar munsifi of Bankura.

H. P. DUVAL,
*Secretary to the Government of Bengal*

---

NOTIFICATIONS

*No. 4044J.—The 7th July 1923.*—In exercise of the power conferred by section 65 of the Bengal Village Self-Government Act, 1919 (Bengal Act V of 1919), the Governor in Council is pleased to appoint the following members of the union boards, mentioned below, during their term of office as such members, to be union benches within the jurisdiction of the union boards of which they are, respectively, members for the purposes of that section :—

**Names of the members of union boards to constitute union benches in the Kishoreganj subdivision of the Mymensingh district.**

| Name of police-station | Name of the union board | Names of the members |
|---|---|---|
| Bhairab ... | Bhairab ... | 1 Babu Mahesh Chandra Kundu.<br>2 ,, Romesh Chandra De<br>3 M Amjadali Sarkar<br>4 Babu Radhica Mohan Bhuyan |
| Katiadi ... | Chandpur ... | 1 Babu Jagat Chandra Routh.<br>2. M Abu Muhammad Siddique Hosain.<br>3. M Sayedar Rahaman Kazi |
| Do ... | Katiadi . | 1 M. Afsaruddin Ahmed.<br>2 Babu Surendra Chandra Saha<br>3 ,, Jagat Chandra Saha |
| Do ... | Kayra ... | 1. Babu Sarat Chandra Bhattacharji<br>2 ,, Umesh Chandra Bagchi<br>3 Munshi Ismail Sarkar. |
| Kishoreganj ... | Marjkhapon ... | 1 M Abdul Jabbar Bhuyan<br>2 Babu Mahendra Chandra Majumdar<br>3 ,, Jagat Chandra Routh. |

*No 4045J.—The 7th July 1923.*—In exercise of the power conferred by section 73 of the Bengal Village Self-Government Act, 1919 (Bengal Act V of 1919), the Governor in Council is pleased to appoint the following members of the union boards, mentioned below, during their term of office as such members, to be union courts within the jurisdiction of the union boards of which they are, respectively, members for the purposes of that section —

**Names of the members of union boards to constitute union courts in the Kishoreganj subdivision of the Mymensingh district.**

| Name of police-station | Name of the union board | Names of the members |
|---|---|---|
| Bhairab ... | Bhairab ... | 1. Babu Mahesh Chandra Kundu.<br>2 ,, Romesh Chandra De.<br>3. M. Amjadali Sarkar.<br>4. Babu Radhica Mohan Bhuyan. |
| Katiadi ... | Chandpur ... | 1. Babu Jagat Chandra Routh.<br>2 M. Abu Muhammad Siddique Hosain<br>3. M Sayedar Rahaman Kazi. |
| Do. ... | Katiadi ... | 1. M. Afsaruddin Ahmed<br>2 Babu Surendra Chandra Saha<br>3. ,, Jagat Chandra Saha. |
| Do. ... | Kayra ... | 1. Babu Sarat Chandra Bhattacharji<br>2. ,, Umesh Chandra Bagchi.<br>3. Munshi Ismail Sarkar |
| Kishoreganj ... | Marjkhapon ... | 1. M. Abdul Jabbar Bhuyan.<br>2 Babu Mahendra Chandra Majumdar.<br>3. ,, Jagat Chandra Routh. |

H. P. DONOVAL.
*Secretary to the Government of Bengal.*

## LOCAL SELF-GOVERNMENT DEPARTMENT.

### NOTIFICATIONS

**Minister in charge: The Hon'ble Sir S. N. Banerji, Kt.**

*No. 1963L.S.-G.—The June 1923.*—The following draft of a notification, which the Government of Bengal (Ministry of Local Self-Government) intend to issue in exercise of the powers conferred by clauses (*a*), (*b*) and (*c*) of section 138 of the Bengal Local Self-Government Act of 1885 (Bengal Act III of 1885), and in supersession of notification No. 1578L S.-G., dated the 17th June 1914, is published, as required by section 143 of the said Act, for the information of persons likely to be affected thereby.

2. The draft will be taken into consideration on or after the 13th August 1923, and any objection or suggestion with respect thereto which may be received by the undersigned before that date will be duly considered.—

*Draft notification.*

In exercise of the powers conferred by clauses (*a*), (*b*) and (*c*) of section 138 of the Bengal Local Self-Government Act of 1885 (Bengal Act III of 1885), the Government of Bengal (Ministry of Local Self-Government) are pleased to make the following amendments in the notification, dated the 11th February 1886, and in the rules published thereunder.—

*Amendments*

1. In the third line of the Bengal Government notification of the 11th February 1886, *after* the figures "138" *insert* the letter and brackets "(*a*)"

2 *After* rule 75 of the said rules *insert* the following, namely —

"*Election of Chairman and Vice-Chairman*

75A. When any orders under section 22 or sub-section (*1*) of section 29 of the Bengal Local Self-Government Act of 1885 have been received by a District Board, a special meeting of the Board, at which there shall be a quorum, shall be held for the election of a Chairman within one month,—

(*a*) in the case of a newly constituted or reconstituted District Board, from the date on which the names of the elected members and the names or official designation of the appointed members of the Board shall have been published in the *Calcutta Gazette*, and

(*b*) in any other case, from the date of the receipt by the Board of the said orders directing the election of a Chairman

75B (*1*) Whenever a meeting of a newly constituted or reconstituted District Board is held for the purpose of electing a Chairman, it shall be presided over by a member of the District Board who shall be elected by the members of the Board for conducting the election. The President in such cases must be duly proposed and seconded and must not be a candidate for the office of Chairman.

(*2*) A meeting of a District Board other than a newly constituted or reconstituted Board held for the purpose of electing a Chairman shall be presided over by the outgoing Chairman, or, in his absence, by the Vice-Chairman.

Provided that should the outgoing Chairman be himself a candidate for election, the meeting shall be presided over by the Vice-Chairman if he is not also a candidate for election

Provided further that if there is no Chairman, and the Vice-Chairman is a candidate for election, and also, if the Chairman and Vice-Chairman be both candidates for election, the meeting shall be presided over by a member of the District Board other than the Chairman or Vice-Chairman, who shall be elected by the members of the Board for the purpose of conducting the election of the Chairman The President in such case must be duly proposed and seconded and must not be a candidate for the office of Chairman.

75C. If only one member is proposed and seconded as President, he shall be deemed to be duly elected as such If more than one member is proposed and seconded, the members present shall decide the election by vote. The votes may be taken by voices or by show of hands.

75D. If the votes for two or more members proposed as President of the meeting are equal, then the selection of one of them shall be decided by lot.

75E. The election of the Chairman of the District Board shall proceed as follows:—

(*a*) Any member present may propose a candidate either by name or by virtue of his office for the office of Chairman.

(*b*) No candidature shall be taken into consideration unless it has been seconded by a member other than the proposer.

(c) If one duly nominated candidate duly stands for election, the President shall forthwith declare such candidate to be elected.

(d) When the names of all the candidates proposed and seconded have been ascertained, the President shall hand to each member a voting paper in which will have been entered up the names of the candidates who have been duly nominated, and shall ask each member to record his vote by placing the mark X opposite the name of the candidate whom he prefers

(e) The voting paper shall be invalid if the mark X is placed opposite the name of more than one candidate, or if it is so placed as to render it doubtful to which candidate such mark is intended to apply.

(f) When the voting has been completed, each member shall sign his voting paper and shall hand the same to the President. Without such signature the voting paper shall be invalid.

(g) The President shall have the right of participating in the election of the Chairman and shall similarly record his vote.

(h) The President, as soon as all the voting papers have been delivered to him, shall examine them in the meeting and read out the names of the candidates against which the mark X has been validly made, but shall not read out the names of the members voting. He shall then proceed to count the votes, having first rejected any voting paper which is invalid or which has been irregularly filled in, on which point his decision shall be final.

(i) When the counting of the votes has been completed, the President shall declare the candidate to whom the largest number of votes has been given to be elected Chairman

(j) In the case of an equality of votes the President shall have a casting vote.

(k) Notwithstanding anything contained in rule 74 or in the Rules of Business adopted by any Board, it shall be sufficient at the election of a Chairman where more than one candidate is proposed and seconded to record in the proceedings the names of the persons proposing and seconding, and the number of persons voting for or against, each candidate and the name of the candidate duly elected

(l) The President shall forthwith report the result of the election to the Commissioner for submission to Local Government for confirmation

(m) Every election made under these rules shall be subject to the approval of Local Government.

(n) A quorum for the purpose of these rules shall consist of half the members of the District Board"

3. In rule 76 *delete* the words "and if the Lieutenant-Governor has so directed, shall also elect one of their number to be Chairman"

4 From the second sentence of the said rule *omit* the words "or Chairman" "or the Chairman" and "as the case may be"

5. *Re-number* rule 76 as sub-rule (*1*) of rule 76, and *insert* the following as sub-rule (*2*), namely.—

"(*2*) The election of the Vice-Chairman shall be made in the same manner as that of the Chairman."

II. Notification No. 1766L S.-G, dated the 20th July 1918, is hereby cancelled

**Minister in charge: The Hon'ble Sir S. N. Banarji, Kt.**

**Dacca.**

*No. 1897L.S.-G.—The 25th June 1923*—In exercise of the power conferred by section 5 of the Bengal Village Self-Government Act, 1919 (Bengal Act V of 1919), and after consideration of the views of the Dacca District Board and the Narayanganj Local Board, the Government of Bengal (Ministry of Local Self-Government) are pleased to direct that thanas Narsingdi, Raipura, Shibpur, Monohardi, Sonakanda, Bandyerbazar, Rupganj and Araihazar in the Narayanganj subdivision, in the district of Dacca, shall be divided into the local areas shown in the table published in pages 841-847 of the Supplement to the *Calcutta Gazette* of date, and that every such local area shall be declared a union for the purpose of the Act.

2. In exercise of the power conferred by sub-section (*1*) of section 6 of the said Act, the Government of Bengal (Ministry of Local Self-Government) are pleased to establish union boards for each of the unions hereby declared and to fix nine as the number of members of each union board.

3. In exercise of the power conferred by sub-section (*3*) of section 6 of the said Act, the Government of Bengal (Ministry of Local Self-Government) are pleased to direct that one-third of the members of each union board shall be appointed by the District Magistrate on the grounds that the electors are inexperienced and that such appointment is necessary for the due representation of minorities.

**Minister in charge : The Hon'ble Sir S. N. Banarji, Kt.**

**Faridpur.**

*No. 1992M.—The 30th June 1923.*—In exercise of the power conferred by section 86 of the Bengal Municipal Act, 1884 (Bengal Act, III of 1884), the Government of Bengal (Ministry of Local Self-Government) are pleased to sanction the levy by the Commissioners of the Rajbari Municipality, in the district of Faridpur under sub-section (*1*) of section 279 of that Act, of a water-rate within the Rajbari Municipality.

2. In exercise of the power conferred by clause (*a*) of the first proviso to section 279 of the same Act, the Government of Bengal (Ministry of Local Self-Government) are further pleased to direct that the water-rate shall not be levied upon any house or lands within the said Municipality, no part of which lies within a radius of one-third of a mile from the nearest standpipe or other supply of water available to the public.

**Minister in charge : The Hon'ble Sir S. N. Banarji, Kt.**

**Faridpur.**

*No. 1993M.—The 30th June 1923.*—In exercise of the power conferred by section 86 of the Bengal Municipal Act, 1884 (Bengal Act III of 1884), and upon the application of the Commissioners of the Rajbari Municipality, in the district of Faridpur, made in pursuance of a resolution passed at a meeting specially convened to consider the question, the Government of Bengal (Ministry of Local Self-Government) are pleased to sanction the levy, under section 321 of that Act, by the Commissioners of the said municipality, of fees for the cleansing of private privies and cesspools within the area of the municipality to which the provisions of Part IX were extended by notification No 1766M, dated the 9th June 1923, and the boundaries of which were specified in the said notification.

**Minister in charge : The Hon'ble Sir S. N. Banarji, Kt.**

**Rajshahi.**

*No. 2004L.S.-G.—The 2nd July 1923.*—In exercise of the power conferred by section 22 of the Bengal Local Self-Government Act, 1885 (Bengal Act III of 1885), the Government of Bengal (Ministry of Local Self-Government) are pleased to approve the election by the members of the Rajshahi District Board of Khan Bahadur Maulvi Emaduddin Ahmed, M.L.C., to be their Chairman.

**Minister in charge : The Hon'ble Sir S. N. Banarji, Kt.**

*No. 2013 L.S.-G.—The 3rd July 1923.*—In exercise of the power conferred by clause (*e*) of sub-section (*2*) of section 101 of the Bengal Village Self-Government Act, 1919 (Bengal Act V of 1919), the Government of Bengal (Ministry of Local Self-Government) are pleased to make the following amendment in the rules published under notification No. 4267 L.S.-G, dated the 5th January 1920 —

*Amendment*

*For* rule 11 of the said rules *substitute* the following —

11. (*1*) At an ordinary meeting of the union board three members shall form a quorum.

(*2*) At a special meeting the quorum shall be formed by at least one-half of the number of members, provided that where the union board consists of seven or nine members the quorum shall be formed by four or five members respectively.

(*3*) If at the time appointed for a meeting referred to in sub-rule (*1*) or sub-rule (*2*), or within one hour thereafter, a quorum is not present, the meeting shall stand adjourned and shall be called again on a future day to be appointed by the President. The members present at such adjourned meeting shall form a quorum, whatever their number may be.

**Minister in charge : The Hon'ble Sir S. N. Banarji, Kt.**

**24-Parganas.**

*No. 2068M.—The 6th July 1923.*—In exercise of the power conferred by clause (*a*) of section 59 of the Bengal Municipal Act, 1884 (Bengal Act III of 1884), the Government of Bengal (Ministry of Local Self-Government) are pleased to approve the resolution passed by the Commissioners of the Bhatpara Municipality in the district of the 24-Parganas under section 27 of that Act electing Mr. D. P. Honeyman to be Chairman of that Municipality, *vice* Mr. D. Mudie, resigned.

**Minister in charge : The Hon'ble Sir S. N. Banarji, Kt.**

**Hooghly.**

*No. 2106M.—The 7th July 1923.*—In exercise of the power conferred by clause (*a*) of section 59 of the Bengal Municipal Act, 1884 (Bengal Act III of 1884), the Government of Bengal (Ministry of Local Self-Government) are pleased to approve the resolution passed by the Commissioners of the Baidyabati Municipality in the district of Hooghly under section 23 of the Act, electing Babu Nirmal Chandra Ghosh to be Chairman of that Municipality.

**Minister in charge : The Hon'ble Sir S. N. Banarji, Kt.**

**24-Parganas.**

*No. 2108M.—The 7th July 1923.*—In exercise of the power conferred by section 27 of the Bengal Municipal Act, 1884 (Bengal Act III of 1884), the Government of Bengal (Ministry of Local Self-Government) are pleased to appoint Mr. J. A. Murray to be a Commissioner of the Bhatpara Municipality in the district of the 24-Parganas, *vice* Mr. D. Mudie, resigned.

**Minister in charge : The Hon'ble Sir S. N. Banarji, Kt.**

*No. 2110M.—The 7th July 1923.*—In exercise of the power conferred by section 14 of the Bengal Municipal Act, 1884 (Bengal Act III of 1884), the Government of Bengal (Ministry of Local Self-Government) are pleased to appointment the following gentlemen to be Commissioners of the Chandpur Municipality in the district of Tippera :—

**Tippera.**

1. Mr C. O. Mackertich.
2. „ A. W Ingleton.
3. „ N. M. Merry.
4. Babu Ramani Mohan Roy.
5. Maulvi Abdus Sattar.
6. „ Abdul Kadir

S. W GOODE,
*Secretary to the Government of Bengal (offg.)*

---

**MEDICAL.**

**Minister in charge : The Hon'ble Sir S. N. Banarji, Kt.**

*No. 1600Medl.—The 29th June 1923.*—Lieutenant A V. Eates I.M.D, Assistant to the Surgeon-Superintendent, Presidency General Hospital, Calcutta, is allowed leave on average pay for thirty-one days (entirely on account of privilege leave at his credit), under article 100 (*a*) of the Fundamental Rules with effect from the 4th June 1923

**Calcutta.**

**Minister in charge : The Hon'ble Sir S. N. Banarji, Kt.**

*No. 1602Medl.—The 29th June 1923.*—Lieutenant C G deGruyther, I M D, House Surgeon, Presidency General Hospital, is appointed to act as Assistant to the Surgeon-Superintendent of that hospital, during the absence, on leave, of Lieutenant A. V. Eates, I.M D

**Calcutta.**

**Minister in charge : The Hon'ble Sir S. N. Banarji, Kt.**

*No. 1619Medl.—The 30th June 1923.*—Lieut.-Colonel D P Goil, M B, I M S, Civil Surgeon, Rajshahi, is allowed leave on average pay for one month and fifteen days under the Fundamental Rules, with effect from the 7th June 1923

**Rajshahi.**

2. This Department notification No 867—Medl, dated the 30th May 1923, is, hereby cancelled

**Minister in charge : The Hon'ble Sir S. N. Banarji, Kt.**

*No. 1625Medl.—The 2nd July 1923.*—Captain H G Alexander, I M S, did general duty at the Medical College Hospitals, Calcutta, from the 20th April to the 5th May 1923

**Calcutta.**

**Minister in charge : The Hon'ble Sir S. N. Banarji, Kt.**

*No 1706Medl.—The 5th July 1923.*—Assistant Surgeon Bipin Chandra Das Gupta, attached to the Barisal charitable dispensary, acted as Civil Surgeon, Bakarganj, in addition to his own duties, from the 8th March to the 25th May 1923, both days inclusive.

**Bakarganj.**

S. W. GOODE,
*Secretary to the Government of Bengal (offg.).*

---

## CORRIGENDUM.

**Minister in charge : The Hon'ble Sir S. N. Banarji, Kt.**

*No 1623Medl.—The 30th June 1923.*—In Government notification No. 1394Medl., dated the 17th May 1923, published at page 688, Part I of the *Calcutta Gazette* of the 23rd idem, *for* "J. H. Taylor" *read* "H. A. Taylor"

S. W. GOODE,
*Secretary to the Government of Bengal (offg.).*

---

**PUBLIC HEALTH.**

**Minister in charge : The Hon'ble Sir S. N. Banarji, Kt.**

*No. 1389P.H.—The 6th July 1923.*—In exercise of the power conferred by section 351 of the Bengal Municipal Act, 1884 (Bengal Act III of 1884), the Government of Bengal (Ministry of Local Self-Government) are pleased to confirm the by-law which has been framed by the Commissioners of the Moheshpur Municipality, in the district of Jessore, under section 350 of the said Act, and published for information with notification No. 946P.H., dated the 12th May 1923.

**Jessore.**

**Minister in charge: The Hon'ble Sir S. N. Banarji, Kt.**

*No. 1392P.H.—The 6th July 1923.*—In exercise of the power conferred by clauses (*i*) and (*ii*) of sub-section (*1*) of section 69 and by clause (*ii*) of section 69B of the Bengal Municipal Act, 1884 (Bengal Act III of 1884) the Government of Bengal (Ministry of Local Self-Government) are pleased to make the following amendments in the rules published under notification No. 1806M, dated the 16th October 1917, namely.—

*Amendments.*

(1) *For* the word "percentages" in rule 9 *substitute* the word "fees."

(2) *For* rule 28 and note thereto *substitute* the following:—

"28. (*1*) Fees payable for the supervision and control of works by the Sanitary Engineer (now styled Chief Engineer, Public Health Department) under rule 9 shall be 7 per cent on the actual cost of the work."

"(*2*) The percentage prescribed in sub-rule (*1*) shall be debited to the work every month and shall be calculated on the total expenditure on the work for the month, no item of expenditure recorded in the accounts being exempt from the percentage charges."

"NOTE.—Where land has to be acquired, the cost of acquisition of land should be included in a separate estimate, and the expenditure on acquiring land should not pass through the books of the Sanitary Engineer (now styled Chief Engineer, Public Health Department), except in the case of land required for brickfield, quarry or other purposes directly connected with the work, the cost of which should be debited to the estimate of the work."

**Minister in charge: The Hon'ble Sir S. N. Banarji, Kt.**

*No. 1408P.H.—The 9th July 1923.*—In pursuance of section 50, sub-section (*2*) of the Indian Ports Act, 1908, the following abstract account of receipts and expenditure of the Hospital Port Dues Fund, Chittagong, for the year 1922-23, is published for general information.

It forms a supplement to the abstract account of the receipts and expenditure of the Chittagong Port Fund for the year 1922-23, published at pages 726-729, Part I of the *Calcutta Gazette* of 30th May 1923.—

**Abstract account of the receipts and expenditure on account of the Chittagong Hospital Port Dues Fund during the year 1922-23.**

RECEIPTS

| | Amount Rs. | A | P | Total Rs. | A. | P |
|---|---|---|---|---|---|---|
| Balance on the 1st April 1922 | ..... | | | 6,946 | 0 | 3 |
| Hospital Port Dues collection | 13,886 | 5 | 6 | | | |
| Interest on deposits in the Bank | 128 | 0 | 0 | | | |
| | | | | 14,014 | 5 | 6 |
| GRAND TOTAL | ..... | | | 20,960 | 5 | 9 |

EXPENDITURE

| | Rs | A | P | | | |
|---|---|---|---|---|---|---|
| Pay and allowances of the Port Health Officer | 5,024 | 5 | 6 | | | |
| Fees of Additional Port Health Officer | 40 | 0 | 0 | | | |
| Health Officer's office establishment | 242 | 12 | 0 | | | |
| Health Officer's boat establishment | 860 | 11 | 9 | | | |
| Pay of dooly-bearer | 175 | 0 | 0 | | | |
| Contingencies, miscellaneous and stores | 632 | 1 | 5 | | | |
| Uniform for boat-men | 89 | 2 | 0 | | | |
| Petty construction and repair | 128 | 1 | 3 | | | |
| Travelling allowance | 96 | 5 | 0 | | | |
| Contribution for the maintenance of the General Hospital, Chittagong | 2,000 | 0 | 0 | | | |
| Contribution for the Bacteriological Laboratory | 200 | 0 | 0 | | | |
| Contribution to the General Hospital for petty establishment for infectious diseases | 260 | 0 | 0 | | | |
| Allowance to the Port Commissioners, Chittagong, for collecting Hospital Port Dues during the year 1922-23 | 300 | 0 | 0 | | | |
| | | | | 10,048 | 6 | 11 |
| Balance on the 31st March 1923 | ..... | | | 10,911 | 14 | 10 |
| GRAND TOTAL | ..... | | | 20,960 | 5 | 9 |

**Minister in charge: The Hon'ble Sir S. N. Banarji, Kt.**

*No. 1416P.H.—The 9th July 1923.*—The following draft of an additional bye-law, which has been framed by the Commissioners of the Arambagh Municipality, in the district of Hooghly, under section 350 of the Bengal Municipal Act, 1884 (Bengal Act III of 1884), and which the Government of Bengal (Ministry of Local Self-Government) propose to confirm under section 351 of the Act, is published for the information of persons likely to be affected thereby.

**Hooghly.**

II. The draft will be taken into consideration on 1st September 1923, and any objection or suggestion received by the undersigned through the District Magistrate before that date will be duly considered :—

*Draft by-law.*

Eradication of water-hyacinth

37A.—Any person having possession of or control over any land or water on or in which there exists any water-hyacinth so as to affect public health shall, if so required by a notice in writing signed by the Chairman or Vice-Chairman of the Municipality, destroy or remove such water-hyacinth, within the period mentioned in such notice. Provided that such notice shall be issued for the whole of an area to be determined by the Municipal Commissioners with a view to secure that the clearance is effective.

Fine, Rs 10, daily fine, Rs. 2.

S. W GOODE,

*Secretary to the Government of Bengal (offg.)*

**Orders by the Surgeon-General with the Government of Bengal.**

*No 9663, dated Calcutta, the 29th June 1923.*—Assistant Surgeon Ashutosh Ghosh did supernumerary duty at the Sambhunath Pandit Hospital, Bhawanipur, from the 29th May to the 1st June 1923, both days inclusive

*No 9665, dated Calcutta, the 29th June 1923*—Assistant Surgeon Ashutosh Ghosh is appointed to act at the headquarters station, Dinajpur district, with effect from the 9th June 1923, *vice* Assistant Surgeon Aghore Nath Ghosh

*No. 9887, dated Calcutta, the 3rd July 1923*—Assistant Surgeon Upendra Nath Bakshi, Lalbagh subdivision and dispensary, Murshidabad district, is granted leave on average pay for four months (of which one month and one day being privilege leave at his credit), under rule 81 (*b*) (*ii*) and proviso thereunder of the Fundamental Rules, with effect from the date on which he is relieved of his duties.

*No. 9889, dated Calcutta, the 3rd July 1923*—Assistant Surgeon Jyoti Prasad Mitra is appointed to act at the Lalbagh subdivision and dispensary, Murshidabad district, *vice* Assistant Surgeon Upendra Nath Bakshi.

*No 9871, dated Calcutta, the 3rd July 1923*—Assistant Surgeon Narendra Nath Chaudhuri did supernumerary duty at the Medical College Hospital, Calcutta, from the 16th to the 22nd June 1923, both days inclusive

*No. 9938, dated Calcutta, the 5th July 1923*—Assistant Surgeon Srish Chandra Sarkar is placed on supernumerary duty at the Medical College Hospital, Calcutta, with effect from the 20th June 1923, until further orders.

*No. 9871, dated Calcutta, the 3rd July 1923.*—Assistant Surgeon Benoy Lal Majumdar, Teacher of Materia Medica, Campbell Medical School, Calcutta, acted as Teacher of Physiology in that school in addition to his own duties from the 8th May 1923 to the 4th June 1923, both days inclusive, *vice* Assistant Surgeon Madan Mohan Datta.

*No. 9917, dated Calcutta, the 4th July 1923.*—Assistant Surgeon Bankim Bihari Ray did supernumerary duty at the Medical College Hospital, Calcutta, from the 20th January to the 19th February 1923, both days inclusive.

*No. 9942, dated Calcutta, the 5th July 1923.*—Assistant Surgeon Chandra Kumar Nandi, Cox's Bazar subdivision and dispensary, Chittagong district, is granted leave on average pay for one month (entirely on account of privilege leave at his credit), under article 81 (*b*) (*ii*) of the Fundamental Rules (without medical certificate), with effect from the 28th May 1923.

*No. 9940, dated Calcutta, the 5th July 1923.*—Assistant Surgeon Jitendra Kumar Banerji is placed on general duty at the Chemical Examiner's Department, Calcutta, with effect from the 27th June 1923, until further orders.

*No. 10133, dated Calcutta, the 6th July 1923.*—Assistant Surgeon Abdul Majed is placed on supernumerary duty at the Medical College Hospital, Calcutta, with effect from the 30th June 1923, until further orders.

D MCCAY, LT.-COL., I.M.S.,

*Surgeon General with the Government of Bengal (offg.).*

## EDUCATION DEPARTMENT.

### NOTIFICATIONS.

**Minister in charge : The Hon'ble Mr. P. C. Mitter, C.I.E.**

**Dacca Divn.**

*No. 1927Edn.—The 3rd July 1923.*—Babu Kalipada Sarkar, Second Inspector of Schools, Dacca Division, was allowed privilege leave for one month and eight days, under article 260 of the Civil Service Regulations, with effect from the 3rd April 1923.

This cancels notification No. 488Edn., dated the 12th February 1923

**Minister in charge : The Hon'ble Mr. P. C. Mitter, C.I.E.**

**Dacca.**

*No. 1928Edn.—The 3rd July 1923.*—Khan Bahadur Maulvi Tasaddak Ahmad, head master, Dacca Collegiate School, was appointed to act as Second Inspector of Schools, Dacca Division, during the absence, on leave, of Babu Kalipada Sarkar

**Minister in charge : The Hon'ble Mr. P. C. Mitter, C.I.E.**

**Mymensingh. Dacca.**

*No 1929Edn.—The 3rd July 1923.*—Babu Sasanka Sekhar Bhattacharji, head master, Jamalpur Government High School, was appointed to act as head master, Dacca Collegiate School, during the absence, on deputation, of Khan Bahadur Maulvi Tasaddak Ahmad

**Minister in charge : The Hon'ble Mr. P. C. Mitter, C.I.E.**

**Mymensingh.**

*No 1930Edn.—The 3rd July 1923.*—Babu Srimanta Sarkar, assistant head master, Jamalpur Government High School, was placed in charge of the office of the head master of the school, in addition to his own duties, during the absence, on deputation, of Babu Sasanka Sekhar Bhattacharji.

**Minister in charge : The Hon'ble Mr. P. C. Mitter, C.I.E.**

**Darjeeling.**

*No 1910Edn.—The 2nd July 1923.*—Miss E L Milner, Junior English Mistress, Dow Hill Girls' School, Kurseong, has been granted by the High Commissioner for India an extension of leave for three months on medical certificate.

**Minister in charge : The Hon'ble Mr. P. C. Mitter, C.I.E.**

**Barisal. Faridpur.**

*No. 1922Edn.—The 2nd July 1923.*—Maulvi Abdul Ghani, Subdivisional Inspector of Schools, Barisal, Sadar, is appointed to act in the Bengal Educational Service as District Inspector of Schools, Faridpur, with effect from the date on which he joins the appointment, *vice* Babu Dwijendra Nath Neogi, on leave, or until further orders

**Minister in charge : The Hon'ble Mr. P. C. Mitter, C.I.E.**

**Dacca.**

*No 1956 Edn.—The 7th July 1923.*—Shams-ul-ulama Maulana Abu Nasr Muhammad Waheed, Principal, Dacca Madrasah, in the Indian Educational Service, is appointed to be Principal, Islamic Intermediate College, Dacca, with effect from the 1st March 1923.

**Minister in charge : The Hon'ble Mr. P. C. Mitter, C.I.E.**

**Dacca.**

*No 1958 Edn.—The 7th July 1923.*—Maulvi Abdur Rub Chaudhury, temporary Professor, Dacca Madrasah, in the Bengal Educational Service, is appointed to be temporary Professor, Islamic Intermediate College, Dacca, with effect from the 1st March 1923.

**Minister in charge : The Hon'ble Mr. P. C. Mitter, C.I.E.**

**Dacca.**

*No. 1959 Edn.—The 7th July 1923.*—Maulvi Muhammad Ishaque, temporary Professor, Dacca Madrasah, in the Bengal Educational Service, is appointed to be temporary Professor, Islamic Intermediate College, Dacca, with effect from the 1st March 1923.

**Minister in charge : The Hon'ble Mr. P. C. Mitter, C.I.E.**

**Dacca.**

*No. 1960 Edn.—The 7th July 1923.*—Maulvi Muhammad, temporary Professor, Dacca Madrasah, in the Bengal Educational Service, is appointed to be temporary Professor, Islamic Intermediate College, Dacca, with effect from the 1st March 1923

**Minister in charge : The Hon'ble Mr. P. C. Mitter, C.I.E.**

**Chittagong Divn.**

*No. 1973Edn.—The 9th July 1923.*—Maulvi Saiyid Moshin Ali, Assistant Inspector of Schools for Muhammadan Education, Chittagong Division, was allowed leave for two months on medical certificate, under article 336 of the Civil Service Regulations, in extension of the leave already granted to him.

**Minister in charge: The Hon'ble Mr. P. C. Mitter, C.I.E.**

*No. 1975Edn.—The 9th July 1923.*—Maulvi Abdul Halim, District Inspector of Schools, Malda, is appointed to act as District Inspector of Schools, Noakhali, *vice* Maulvi Khabiruddin Ahmad, on deputation, or until further orders.

**Malda. Noakhali.**

This cancels notification No. 1358Edn., dated the 11th April 1923.

**Minister in charge: The Hon'ble Mr. P. C. Mitter, C.I.E.**

*No. 1976Edn.—The 9th July 1923.*—Babu Birendra Lal Ganguli, Subdivisional Inspector of Schools, Sirajganj, Pabna, is appointed to act in the Bengal Educational Service as District Inspector of Schools, Malda, *vice* Maulvi Abdul Halim, on deputation, or until further orders.

**Pabna. Malda.**

**Minister in charge: The Hon'ble Mr. P. C. Mitter, C.I.E.**

*No. 1977Edn.—The 9th July 1923.*—Maulvi Mahatabuddin Ahmad, District Inspector of Schools, Mymensingh, continues to act as Assistant Inspector of Schools for Muhammadan Education, Chittagong Division, during the absence, on leave, of Maulvi Saiyid Moshin Ali, or until further orders

**Mymensingh. Chittagong Divn.**

**Minister in charge: The Hon'ble Mr. P. C. Mitter, C.I.E.**

*No. 1978Edn.—The 9th July 1923.*—Babu Pramatha Nath Das Gupta, Subdivisional Inspector of Schools, Jalpaiguri, continues to act in the Bengal Educational Service as District Inspector of Schools, Mymensingh, during the absence, on deputation, of Maulvi Mahatabuddin Ahmad, or until further orders.

**Jalpaiguri. Mymensingh.**

J. N ROY,

*Secretary to the Government of Bengal.*

---

**MISCELLANEOUS.**

**Minister in charge: The Hon'ble Mr. P. C. Mitter, C.I.E.**

*No. 1263Mis.—The 7th July 1923.*—It is hereby notified for general information that, under section 5 of the Indian Registration Act, 1908 (XVI of 1908), the Government of Bengal (Ministry of Education) sanction the abolition, with effect from the 23rd June 1923, of the office of the Second Joint Sub-Registrar of Midnapore.

**Midnapore.**

J. N ROY,

*Secretary to the Government of Bengal*

---

## Orders by the Director of Public Instruction, Bengal.

---

**SUBORDINATE EDUCATIONAL SERVICE.**

*The 16th June 1923.*

*No. 360A.*—Babu Makhan Lal Banerjee, assistant master, Rajshahi Collegiate School, on Rs 75—5—200, was allowed leave for two months, with effect from the 15th January 1923, viz., leave on average pay for three days under rule 82 (*b*) of the Fundamental Rules and leave on half average pay for the remaining period under rule 81 (*d*) of those rules

**Rajshahi.**

2 Babu Sudhir Chandra Chakravarti is declared to have acted as assistant master, Rajshahi Collegiate School, on an allowance of Rs 75 a month, with effect from the date he joined the appointment, *vice* Babu Makhan Lal Banerjee, on leave.

*No. 361A.*—Maulvi Syed Ali Hamed is appointed to act as a Sub-Inspector of Schools, Dhamrai, in the district of Dacca, on an allowance of Rs. 75 a month, in the scale of Rs 75—5—150—5—200, with effect from the date he joins the appointment, *vice* Maulvi Ahmadulla Khan, deceased.

**Dacca.**

*No. 362A.*—Maulvi Anisuddin Ahmed, Sub-Inspector of Schools, Kulpi, in the district of 24-Parganas, on Rs. 75—5—200, was allowed, in terms of rule 81 (*b*) (*ii*) of the Fundamental Rules, leave on average pay for two months (the entire period being on account of privilege leave at his credit), with effect from 3rd April 1923.

**24-Parganas.**

He was also permitted to prefix the last Easter holidays to his leave

2. Babu Purna Chandra Biswas, officiating Sub-Inspector of Schools, Diamond Harbour, is declared to have acted as Sub-Inspector of Schools, Kulpi, in the district of 24-Parganas, on an allowance of Rs. 75 a month, with effect from the date he joined the appointment, *vice* Maulvi Anisuddin Ahmed, on leave.

*The 20th June 1923.*

*No. 363A.*—Babu Hrishikesh Mukherjee, Sub-Inspector of Schools, Dubrajpur Circle, district Birbhum, on Rs. 75—5—200, is granted, in terms of rule 81 (*b*)(*ii*) of the Fundamental Rules, leave on average pay for thirty days (the entire period being on account of privilege leave at his credit), with effect from the 1st June 1923, or from any subsequent date on which he may have availed himself of it.

**Birbhum.**

*No. 364A.*—Maulvi Azhar Ali Khan, assistant master, Jessore Zilla School, on Rs. 75—5—200, was allowed, in terms of rule 81 (*b*) (*ii*) of the Fundamental Rules, leave on medical certificate on average pay for three months, with effect from the 4th January 1923.

**Jessore.**

He is permitted to retain a duty hen upon his appointment as Librarian of the Jessore Zilla School.

2. Babu Tarapada Ghosh is declared to have acted as assistant master, Jessore Zilla School, on an allowance of Rs. 75 per mensem in the scale of Rs. 75—5—200, with effect from the date he joined the appointment, *vice* Maulvi Azhar Ali Khan, on leave.

3. Maulvi Tasiruddin Ahmed, assistant master, Jessore Zilla School, on Rs. 75—5—200, is appointed to act as Librarian of the same school and is permitted to draw the allowance of Rs. 20 per mensem, with effect from the 7th January 1923, *vice* Maulvi Azhar Ali Khan, on leave, or until further orders.

*No. 365A.*—Maulvi Attabuddin Ahmed, Sub-Inspector of Schools, Bancharampur, Tippera, on Rs. 75—5—200, is granted, in terms of rule 81 (*b*) (*ii*) of the Fundamental Rules, leave on medical certificate on average pay for three months, in extension of that granted to him in this office notification No. 275A., dated the 8th May 1923.

**Tippera.**

*No. 366A.*—Maulvi A. M. Muhammad Asad, lecturer in Arabic, Dacca Intermediate College, is appointed to be lecturer in Arabic and Persian, Presidency College, with effect from the 1st July 1923, *vice* Maulvi K. M. Habibullah Siddiqui, discharged.

**Calcutta.**
**Hooghly.**

He will, however, continue in his present officiating appointment as Assistant Superintendent of the Hooghly Madrasah and in the Bengal Educational Service until further orders.

*No. 367A.*—Babu Ramani Mohan Chakravarti, assistant master, Pabna Zilla School, on Rs. 75—5—290, was allowed, in terms of rule 81 (*b*) (*ii*) of the Fundamental Rules, leave on medical certificate on average pay for three months, with effect from the 6th February 1923.

**Pabna.**

Babu Purna Chandra Pal, B.A., is declared to have acted as assistant master, Pabna Zilla School, on an allowance of Rs. 75 per month, with effect from the date he joined the appointment, *vice* Babu Ramani Mohan Chakravarti, on leave.

*The 21st June 1923.*

*No. 368A.*—Babu Dakshina Ranjan Das Gupta, assistant head master, Dinajpur Zilla School, on Rs. 150—10—250 is granted, under rule 82 (*b*) of the Fundamental Rules, leave for one month and fifteen days (the entire period being due as privilege leave on full pay under article 272 of the Civil Service Regulations), with effect from the 21st June 1923.

**Dinajpur.**

He is also permitted to combine with his leave the summer vacation of the school for 1923.

*The 25th June 1923.*

*No. 369A.*—The following arrangements are sanctioned :—

(1) Maulvi Syed Abdus Sattar, Sub-Inspector of Schools, Serajganj, Pabna, on Rs. 75—5—200, is appointed to act as Subdivisional Inspector of Schools, Dinajpur, and in the scale of Rs. 150—10—250, on the usual acting allowance admissible under the rules, with effect from the date he joins the appointment, *vice* Maulvi Dalimuddin Ahmed (No. 1), on deputation to the Dacca Training College.

**Pabna.**
**Dinajpur.**
**Dacca.**

(2) Maulvi Daud Ali, officiating Sub-Inspector of Schools, Chittagong Sadar, is appointed to act as assistant master, Chittagong Government Moslem High School, and in the scale of Rs. 70—5—200, with effect from the date he joins the appointment, *vice* Maulvi Mahmudar Rahman, on deputation to the Dacca Training College.

**Chittagong.**
**Dacca.**

(3) Babu Rasik Chandra Chakravarty, is appointed to act as head pandit Comilla Zilla School, on an allowance of Rs. 60 per mensem, with effect from the date he joins the appointment, *vice* Babu Jogendra Nath Chakravarty, on deputation to the Dacca Training College.

**Tippera.**
**Dacca.**

(4) Babu Durga Charan Roy, assistant master, Jamalpur Government High School, is appointed to act as assistant master, Dacca Collegiate School, with effect from the date he joins the appointment, *vice* Babu Sukumar Dutta, on deputation to the Dacca Training College

Mymensingh. Dacca.

(5) Babu Ramani Mohan Roy is appointed to act as assistant master, Faridpur Zilla School, and in the scale of Rs 75—5—200, with effect from the date he joins the appointment, *vice* Babu Manmatha Nath Chakravarty, on deputation to the Dacca Training College.

Faridpur. Dacca.

(6) Maulvi Abdul Latif Bhuiya, assistant master, Bhola Government High School, is appointed to act as assistant master, Mymensingh Zilla School, with effect from the date he joins the appointment, *vice* Babu Surendra Chandra Chaudhury, on deputation to the Dacca Training College.

Bakarganj. Mymensingh. Dacca.

(7) Maulvi Sukur Muhammad Dewan is appointed to act as Sub-Inspector of Schools, Raipur, Dacca, on an allowance of Rs 75 per mensem with effect from the date he joins the appointment, *vice* Maulvi Muhammad Babroo, on deputation to the Dacca Training College

Dacca.

(8) Maulvi Syed Abdus Salam is appointed to act as Sub-Inspector of Schools, Nagarpur, Mymensingh, on an allowance of Rs 75 per mensem, with effect from the date he joins the appointment, *vice* Maulvi Moslemuddin Ahmed, on deputation to the Dacca Training College

Mymensingh. Dacca.

(9) Maulvi Dewan Ali, officiating Sub-Inspector of Schools, Kishoreganj, Mymensingh, is appointed to act as Sub-Inspector of Schools, Gopalganj, Faridpur, on an allowance of Rs 75 per mensem, with effect from the date he joins the appointment, *vice* Maulvi Azaruddin Ahmed, on deputation to the Dacca Training College.

Mymensingh. Dacca Faridpur.

(10) Babu Hemendra Nath Chakravarty is appointed to act as assistant master, Jhalakati Government High School, on an allowance of Rs 75 per mensem, with effect from the date he joins the appointment, *vice* Maulvi Yakub Ali, on deputation to the Dacca Training College

Bakarganj. Dacca.

*The 26th June 1923*

*No 370A* —Maulvi Sultan Ahmed, officiating special Sub-Inspector of Schools, Cox's Bazar, Chittagong, is appointed to act as Sub-Inspector of Schools, Patiya, Chittagong, in the scale of Rs 75—5—200, with effect from the date he joins the appointment, *vice* Maulvi Mukhlesur Rahman, on deputation

Chittagong.

*No 371A.*—Babu Surendra Nath Sen, assistant master, Dinajpur Zilla School, on Rs. 75—5—200, is appointed to act as assistant head master of the same school and in the scale of Rs 150—10—250, on the usual acting allowance admissible under the rules, with effect from the 21st June 1923, or any subsequent date on which he takes over charge of the appointment, *vice* Babu Dakshina Ranjan Das Gupta, on leave

Dinajpur.

*The 27th June 1923*

*No. 372A* —Babu Charu Chandra Mukherji, Sub-Inspector of Schools, Keshpur, Midnapore, now officiating Sub-Inspector or Schools, Garbeta, Midnapore, on Rs 75—5—200, was allowed, in terms of rule 81 (*b*) (*ii*) of the Fundamental Rules, leave on average pay for one month and seven days (the entire period being privilege leave at his credit), with effect from 5th February 1923.

Midnapore.

He was permitted to prefix Sunday, the 4th February 1923, to his leave.

*The 28th June 1923.*

*No. 373A.*—Maulvi Muhammad Zobaidullah, Sub-Inspector of Schools, Sitakund, Chittagong, on Rs. 75—5—200, was granted, in terms of rule 81 (*b*) (*ii*) of the Fundamental Rules, leave on average pay for one week, in extension of that already granted to him in this office notification No. 344A, dated 8th June 1923.

Chittagong.

*No. 374A.*—Maulvi Bakhta Jamal, Subdivisional Inspector of Schools, Jessore, on Rs. 150—10—250, is held to have been on leave on medical certificate on average pay under rule 81 (*b*) (*ii*) of the Fundamental Rules for the period from 22nd May 1923 to 12th June 1923 (both days inclusive).

Jessore.

*No. 375A.*—Babu Biswajiban Bhattacharyya, B.A., B.T., head master, Dacca Guru-Training School, in the scale of Rs. 75—5—150—5—200, is appointed to be assistant head master of the Rangamati Government High School and in the scale of Rs. 150—10—250, with effect from the date he joins the appointment, *vice* Babu Dhirendra Nath Chowdhury, transferred.

Dacca.
Chittagong.

*No. 376A.*—Maulvi Muhammad Mafikulla, Sub-Inspector of Schools, Manirampur, Jessore, on Rs 75—5—200, was granted leave on average pay on medical certificate, under rule 81 (*b*) (*ii*) of the Fundamental Rules, for a period of one and a half month, in extension of that already granted to him in this office notification No 307A, dated the 21st May 1923.

Jessore.

*The 30th June 1923*

*No. 377A*—In supersession of all the previous notifications on the subject, Miss Wears Taylor, assistant mistress, Eden High School for Girls, Dacca, in the scale of Rs 75—5—200 (previously in class I of the Subordinate Educational Service), is granted combined leave for three years and five months, with effect from the 2nd August 1920, as stated below.

Dacca.

(*a*) Ordinary privilege leave for three months, under article 271 of the Civil Service Regulations and additional privilege leave for three months, in terms of the Government of India, Finance Department, letter No 168C S.R, dated the 24th February 1919, from 2nd August 1920 to 1st February 1921, both days inclusive;

(*b*) furlough on half pay for ten months and thirty days, under article 338 of the the Civil Service Regulations, from 2nd February 1921 to 31st December 1921, both days inclusive;

(*c*) leave on half average pay for eleven months and one day, under rule 81 (*d*) of the Fundamental Rules, from 1st January 1922 to 1st December 1922, both days inclusive,

(*d*) leave on quarter average pay for eight months, under rule 88 of the Fundamental Rules, from 2nd December 1922 to 1st August 1923, both days inclusive, and

(*e*) leave without allowances for five months from 2nd August 1923 to 1st January 1924, both days inclusive, under rule 85 (*a*) of the Fundamental Rules.

*No. 378A.*—In supersession of all previous notifications on the subject, Miss Olga Jackson, assistant mistress, Eden High School for Girls, Dacca, in the scale of Rs. 75—5—200 (previously in class II of the Subordinate Educational Service), is granted combined leave for three years and five months, with effect from the 2nd August 1920, as stated below.—

Dacca.

(*a*) Ordinary privilege leave for three months, under article 271 of the Civil Service Regulations and additional privilege leave for three months, in terms of the Government of India, Finance Department, letter No. 1 8C.S R., dated the 24th February 1919, from 2nd August 1920 to 1st February 1921, both days inclusive;

(*b*) furlough on half pay for ten months and thirty days, under article 338 of the Civil Service Regulations, from 2nd February 1921 to 31st December 1921, both days inclusive,

(*c*) leave on half average pay for eleven months and one day, under rule 81 (*d*) of the Fundamental Rules, from 1st January 1922 to 1st December 1922 both days inclusive,

(*d*) leave on quarter average pay for eight months, under rule 88 of the Fundamental Rules, from 2nd December 1922 to 1st August 1923, both days inclusive; and

(*e*) leave without allowances for five months from 2nd August 1923 to 1st January 1924, both days inclusive, under rule 85 (*a*) of the Fundamental Rules.

*The 2nd July 1923.*

*No. 379A.*—Maulvi Muhammad Wares, head maulvi, Barrackpur Government High School, on Rs. 60—4—160, was allowed, in terms of rule 81 (*b*) (*ii*) of the Fundamental Rules, leave on medical certificate on average pay for one month and fifteen days, with effect from the 6th March 1923.

24-Parganas.

He is also granted, in terms of rule 81 (*b*) (*ii*) of the Fundamental Rules, leave out of India on average pay for six months, with effect from the 15th June 1923

He is permitted to prefix the summer vacation of the school of 1923 to his leave.

2. Maulvi Muhammad Basirulla is appointed to act as head maulvi, Barrackpur Government High School, on an allowance of Rs. 60 per mensem, with effect from the date he joined the appointment, *vice* Maulvi Muhammad Wares, on leave, or until further orders.

3. Maulvi Muhammad Illahdad Khan, head maulvi, Darjeeling High School, on Rs. 60—4—160, is appointed to act as head maulvi, Barrackpur Government High School, on his own pay, with effect from the date he joins the appointment, *vice* Maulvi Muhammad Wares, on leave.

*No. 380A.*—Babu Gopal Chandra Mukherji, officiating assistant master, Comilla Zilla School, on an allowance of Rs 75 a month, was allowed leave on half average pay for five days, with effect from the 3rd April 1923, in terms of clause 2 (*b*) of the Local Government notification No 19463, dated the 23rd December 1921.

**Tippera.**

He was also permitted to prefix the last Easter holidays to his leave

*No 381A.*—In supersession of this office notification No 326A., dated the 1st June 1923, Babu Mohini Mohan Neogi, Sub-Inspector of Schools, Panskura, Midnapore, on Rs. 75—5—200, is granted, in terms of clauses (*b*) (*ii*) and (*d*) of rule 81 of the Fundamental Rules, combined leave for one month, viz., leave on average pay for eleven days and on half average pay for the remaining period, in extension of the leave granted to him in this office notification No. 267A, dated the 5th May 1923.

**Midnapore.**

He is permitted to affix the Empire Day holiday, the 24th May 1923, to his leave

*The 3rd July 1923*

*No 382A* —The following arrangements are sanctioned —

(1) Maulvi Abdur Rahim is appointed to act as assistant master Bogra Zilla School, and in the scale of Rs 75—5—200, with effect from the date he joins the appointment, *vice* Maulvi Abdul Bar., on deputation

**Bogra.**

(2) Babu Bibhuti Bhusan Lahiri is appointed to act as head master of the Practising Middle English School attached to the Rangpur Normal School and in the scale of Rs 75-5-200 with effect from the date he joins the appointment, *vice* Babu Nibaran Chandra Sen, on deputation.

**Rangpur.**

(3) Babu Narahari Bhattacharji is appointed to act as Sub-Inspector of Schools, Panchagarh, Jalpaiguri, and in the scale of Rs. 75—5—200, with effect from the date he joins the appointment, *vice* Babu Khageswar Roy, on deputation

**Jalpaiguri.**

(4) Babu Surendra Nath Das is appointed to act as Sub Inspector of Schools, Balurghat, Dinajpur, and in the scale of Rs 75—5—200, with effect from the date he joins the appointment, *vice* Babu Baidya Nath Chaudhury, on deputation.

**Dinajpur.**

*No. 383A.*—Maulvi Shaikh Sujan, Sub-Inspector of Schools, East Sadar, Nadia, on Rs. 75—5—200, now officiating Subdivisional Inspector of Schools, Howrah Sadar, in the scale of Rs. 150—10—250, is granted in terms of rule 81 (*b*) (*ii*) of the Fundamental Rules leave on average pay for twenty days (the entire period being privilege leave at his credit) in extension of that already granted to him in this office notification No. 312A., dated 25th May 1923.

**Nadia.**
**Howrah.**

*No. 384A.*—Maulvi Syed Zahiruddin Ahmed, Sub-Inspector of Maktabs, Midnapore, on Rs. 75—5—200, is granted leave on average pay under rule 81 (*b*) (*ii*) of the Fundamental Rules for a period of three months (the entire period being privilege leave at his credit), with effect from the 4th June 1923

**Midnapore.**

He is also permitted to prefix the Emperor's Birthday holiday (2nd June) and Sunday, the 3rd June 1923, to his leave.

*No. 385A.*—Maulvi Syed Mahbubar Rahim, assistant master, Krishnagar Collegiate School (on probation), in the scale of Rs. 75—5—200, was granted leave for a period of one month, with effect from 5th March 1923, viz., three days' leave on average pay under rule 81 (*b*) (*ii*) and the remaining period on half average pay under rule 81 (*d*) of the Fundamental Rules.

Nadia.

He was also permitted to prefix the 3rd and 4th March 1923 (Dolejatra holiday and Sunday) to his leave.

2. Babu Nishithanath Mandal was appointed to act as an assistant master of the Krishnagar Collegiate School, on an allowance of Rs. 75 per mensem, for a period of one month, with effect from the date he joined the appointment, *vice* Maulvi Syed Mahbubar Rahim, on leave.

*No 386A.*—Maulvi Muhammad Yusuf Ali, assistant master, Barrackpore Government School, in the scale of Rs. 75—5—200, is allowed leave on medical certificate on average salary under the proviso of rule 81 (*b*) (*ii*) of the Fundamental Rules for a period of twenty-seven days, with effect from 27th January 1923.

24-Parganas.

*The 5th July 1923.*

*No 387A.*—(1) Babu Upendra Chandra Guha, assistant head master, Krishnagar Collegiate School, on Rs. 150—10—250, was allowed leave on average pay for twelve days (the entire period on account of privilege leave at his credit under article 272 of the Civil Service Regulations), with effect from 9th April 1923, in terms of rule 82 (*b*) of the Fundamental Rules.

Nadia.

(2) Babu Panchanan Bhattacharji, assistant master, Krishnagar Collegiate School on Rs. 75—5—200, is declared to have acted as assistant head master of the same institution and in the scale of Rs. 150—10—250 on the usual acting allowance admissible under the rules, during the absence, on leave, of Babu Upendra Chandra Guha.

(3) Babu Nishithanath Mandal is declared to have acted as assistant master, Krishnagar Collegiate School, on an allowance of Rs. 75 per mensem for twelve days, with effect from 9th April 1923, *vice* Babu Panchanan Bhattacharji, on deputation.

*No. 388A.*—Miss Wears Taylor, assistant mistress, Eden High School for Girls, Dacca, on Rs 75—5—200, is granted in terms of rule 85 (*b*) of the Fundamental Rules, leave without allowances for one year and seven months, with effect from 2nd January 1924, in extension of the leave granted to her in this office notification No 377A., dated 30th June 1923.

Dacca.

*No. 389A.*—In partial modification of this office notification No. 203, dated 12th April 1923, Maulvi Muhammad Khorshed Hossain, Subdivisional Inspector of Schools, Khulna, on Rs. 150—10—250, is granted, with effect from 7th October 1922, leave for three months and twenty-seven days, viz., on average pay for one month and twenty-six days, (of which one month and one day is on account of privilege leave) in terms of rule 81 (*b*) (*ii*) of the Fundamental Rules and on half average pay for the remaining period in terms of rule 81 (*d*) of those rules.

Khulna.

He is permitted to prefix the Durga Puja holidays to his leave.

2. The officiating arrangements already sanctioned are allowed to continue.

*The 6th July 1923.*

*No 390A.*—(1) Miss Nirmal Hazra, temporary lecturer of the Intermediate classes, attached to the Eden High School for Girls, Dacca, on Rs. 150—10—400, is granted in terms of rule 2 (*b*, and (*c*) of the Rules framed by Local Government, Finance Department, notification No. 19463F., dated the 23rd December 1921, combined leave for four months and nineteen days, with effect from the 13th April 1923, viz., leave on half pay for three months and leave without allowances for the remaining period.

Dacca.

(2) Babu Samarendra Kishore Datta is appointed to act as Lecturer of the Intermediate classes attached to the Eden High School for Girls, Dacca, on an allowance of Rs. 150 per month, with effect from the 2nd July 1923 or any subsequent date on which he joins the appointment, *vice* Miss Nirmal Hazra, on leave.

W. W. HORNELL,

*Director of Public Instruction, Bengal.*

## Orders by the Inspector-General of Registration, Bengal.

*No. 258.—The 2nd July 1923.*—Maulvi Abul Hosain (No. II), Sub-Registrar, attached to Mymensingh, acted as Sub-Registrar of Trisal, in the same district, from the afternoon of the 31st January 1923 to 4th March 1923, during the absence on military training of Babu John Ballav Chaudhury.

Mymensingh.

*No. 259.—The 3rd July 1923.*—Maulvi Muhammad Ibrahim Hosain, Second Joint Sub-Registrar of Jamalpur, in the district of Mymensingh, is allowed leave on average pay for two months (entire period being on account of privilege leave at his credit), under rule 81 (*b*) (*ii*) of the Fundamental Rules, in extension of the leave granted to him in this department notification No. 214, dated the 6th June 1923.

Mymensingh.

*No. 260.—The 3rd July 1923.*—Babu Amrita Lal Das Gupta, Sub-Registrar, on leave, is appointed to be Second Joint Sub-Registrar of Jamalpur, in the district of Mymensingh.

Mymensingh.

This cancels this department notification No. 173, dated the 17th May 1923, appointing him to be Sub-Registrar of Badarganj, in the district of Rangpur.

*No. 261.—The 6th July 1923.*—Babu Atul Krishna Banarji, Sub-Registrar of Dumuria, in the district of Khulna, on leave, is appointed to be Sub-Registrar of Magura, in the same district.

Khulna.

*No. 262.—The 6th July 1923.*—Maulvi Abul Hossain (No. II), Sub-Registrar attached to Mymensingh, officiating at Pirganj, in the district of Dinajpur, is allowed leave on average pay for one month (twenty-four days being on account of privilege leave at his credit), under rule 81 (*b*) (*ii*) of the Fundamental Rules, with effect from the date on which he avails himself of it.

Mymensingh. Dinajpur.

*No. 263.—The 6th July 1923.*—Maulvi Muhammad Hafez Chaudhuri, Sadar Joint Sub-Registrar of Barisal, is allowed leave on average pay for one month (five days being on account of privilege leave at his credit), under rule 81 (*b*) (*ii*) of the Fundamental Rules, with effect from the 4th June 1923

Bakarganj.

*No. 264.—The 6th July 1923.*—Maulvi Anwar Ali, Sub-Registrar, is appointed to act as Sadar Joint Sub-Registrar of Barisal, with effect from the 11th June 1923, *vice* Maulvi Muhammad Hafez Chaudhuri, on leave.

Bakarganj.

*No. 265.—The 6th July 1923.*—Babu Kishori Mohan Basu, Sub-Registrar of Joynagar, in the district of the 24-Parganas, is allowed leave on average pay for thirty-six days, under rule 81 (*b*) (*ii*) of the Fundamental Rules, with effect from the 28th May 1923.

24-Parganas.

*No. 266.—The 6th July 1923.*—Maulvi Enayut Rasul, Sub-Registrar attached to Alipore, is appointed to act as Sub-Registrar of Joynagar, in the district of the 24-Parganas, with effect from the afternoon of the 29th May 1923, *vice* Babu Kishori Mohan Basu, on leave.

24-Parganas.

*No. 267.—The 6th July 1923.*—Babu Girindra Nath Ray, Sub-Registrar of Potaspur, in the district of Midnapore, is allowed leave on average pay for one month (fifteen days being on account of privilege leave at credit), under rule 81 (*b*) (*ii*) of the Fundamental Rules, with effect from the 25th May 1923.

Midnapore.

*No. 268.—The 6th July 1923.*—Maulvi Ghulam Husain, Sub-Registrar attached to Berhampore, in the district of Murshidabad, is appointed to act as Sub-Registrar of Potaspur, in the district of Midnapore, during the absence, on leave, of Babu Girindra Nath Ray, or until further orders, with effect from the 9th June 1923.

Murshidabad. Midnapore.

*No. 269.—The 6th July 1923.*—Babu Charu Chandra Lahiri, Sub-Registrar, under orders of transfer to Gangarampur, in the district of Dinajpur, is allowed leave on average pay for one month and fifteen days, under rule 81 (*b*) (*ii*) of the Fundamental Rules, in extension of the leave granted to him in notification No. 162, dated the 10th May 1923.

Dinajpur.

*No. 270.—The 6th July 1923.*—Babu Jatindra Mohan Nath, Sub-Registrar attached to Krishnagar, in the district of Nadia, is appointed to act as Sub-Registrar of Chatiantala, in the district of Jessore, with effect from the afternoon of the 20th June 1923, *vice* Babu Bidhu Bhusan Chatarji, on leave.

Nadia.
Jessore.

*No 271.—The 6th July 1923.*—Maulvi Tawabar Rahim, Sub-Registrar of Boda, in the district of Jalpaiguri, is allowed leave on half average pay for one month, under rule 81 (*d*) of the Fundamental Rules, in extension of the leave granted to him in this department notification No. 62, dated the 26th February 1923.

Jalpaiguri.

*No 272.—The 6th July 1923.*—Babu Jogendra Nath Chatarji, Sub-Registrar, under orders of transfer to Kaliakair, in the district of Dacca, is allowed leave on average pay for one month, under rule 81 (*b*) (*ii*) of the Fundamental Rules, in extension of the leave granted to him in this department notification No. 146, dated the 3rd May 1923.

Dacca.

*No. 273.—The 6th July 1923.*—Babu Narendra Nath Sarkar, Sadar Third Joint Sub-Registrar, Bogra, was on leave on average pay for two months (entire period being on account of privilege leave), under rule 81 (*b*) (*ii*) of the Fundamental Rules, from the 9th April 1923 to the 8th June 1923 (both days inclusive).

Bogra.

*No. 274.—The 6th July 1923.*—Maulvi Jasimuddin Ahmad, Sub-Registrar attached to Pabna, acted as Sadar Third Joint Sub-Registrar of Bogra, from the 9th April 1923 to the forenoon of the 9th June 1923, *vice* Babu Narendra Nath Sarkar, on leave.

Pabna.
Bogra.

*No. 275.—The 6th July 1923.*—Babu Kalipada Basu Ray, Sub-Registrar attached to Dacca, is appointed to act as Sub-Registrar of Kasiani, in the district of Faridpur, with effect from the 8th May 1923, *vice* Maulvi Naziruddin Muhammad (No. I), on leave.

Dacca.
Faridpur.

*No. 276.—The 6th July 1923.*—Babu Bibhuti Bhusan Chakrabatti, Sub-Registrar, is allowed leave for six months from the 27th March 1923, viz., furlough on half average salary for two months and fifteen days under article 322 read with article 301(*a*) of the new leave rules, and furlough on quarter average salary for one month and fourteen days under article 325(*a*) of the same rules, and extraordinary leave without allowances for two months and one day under article 306 of the same rules, in extension of the leave granted to him in this department notification No. 514, dated the 27th November 1922.

*No. 277.—The 6th July 1923.*—Babu Harry Ballav Chaudhury, officiating Sub-Registrar of Nalitabari, in the district of Mymensingh, is allowed leave on average pay for one month (twenty-six days being on account of privilege leave at credit), under rule 81 (*b*) (*ii*) of the Fundamental Rules, with effect from the 12th June 1923.

Mymensingh.

*No. 278.—The 6th July 1923.*—Babu Ratish Chandra Ray, probationer of Dacca, is appointed to act until further orders as Sub-Registrar of Nalitabari, in the district of Mymensingh, *vice* Babu Harry Ballav Chaudhury, on leave, with effect from the 12th June 1923.

Dacca.
Mymensingh.

A. ISLAM,

*Inspector-General of Registration, Bengal.*

## FINANCE DEPARTMENT.

### MISCELLANEOUS.

### NOTIFICATIONS.

*No. 1464Mis.—The 7th July 1923.*—Under sub-section (*1*) of section 11 of the Bengal Amusements Tax Act, 1922, the Governor in Council is pleased to authorise J. D. Tyson, Esq., I.C.S. to enter any place of entertainment within the areas mentioned in section 1, sub section (*3*), clauses (*a*) and (*b*) of the said Act, and in the Municipality of Howrah, with a view to seeing whether the provisions of Chapter I of the Act or any rules made thereunder are being complied with.

*No. 1465Mis.—The 7th July 1923.*—Under rule 12 of the Rules made under sub-section (*1*) of section 12 of the Bengal Amusements Tax Act, 1922, published under Notification No. 2928Mis., dated the 16th September 1922, the Governor in Council is pleased to appoint J. D. Tyson, Esq. I.C.S. to be the officer referred to in clauses (*1*) and (*2*) of that rule, and to authorise him to exercise all the functions of that officer within the areas mentioned in section 1, sub-section (*3*), clauses (*a*) and (*b*) of the said Act and in the Municipality of Howrah.

A MARR,

*Secretary to the Government of Bengal.*

## MARINE DEPARTMENT.

### NOTIFICATIONS.

*No 73Marine —The 6th July 1923.*—The following notification issued by the Government of India, Department of Commerce, in Part I (page 590) of the *Gazette of India*, dated the 30th June 1923, is republished for general information.

A. MARR,

*Secretary to the Government of Bengal.*

No. 3563, dated Simla, the 28th June 1923

NOTIFICATION—By the Government of India, Department of Commerce (Wireless Telegraphy-Shipping).

IN exercise of the power conferred by section 245 of the Indian Merchant Shipping Act, 1923 (XXI of 1923), the Governor-General in Council is pleased to direct that the following amendment shall be made in the Indian Wireless Telegraphy (Shipping) Rules, 1923, namely :—

*After* sub-rule (*2*) of rule II of the said rules, the following sub-rule shall be inserted, namely :—

"(*3*) For the purposes of sub-rule (*2*) experience as an operator in the Royal Navy or Royal Indian Marine or in seaplanes of the Royal Air Force may be accepted in substitution for experience at sea as a commercial operator in a vessel of the Mercantile Marine in respect of a period which for the purposes of clause (*i*) of the said sub-rule shall not exceed two years and for the purposes of clause (*ii*) or clause (*iii*) of the said sub-rule shall not exceed six months of the total period of experience required."

*No. 71Marine.—The 28th June 1923.*—Mr. A. C. Davis, 2nd Mate Leadsman, is granted leave on average pay for three weeks, with effect from the 6th June 1923 P.M., under article 81 (*b*) (*i*) of the Fundamental Rules.

*No. 72Marine.—The 6th July 1923.*—Mr. C. B. Owens, Senior Master Pilot, is appointed to act as a Branch Pilot, with effect from the afternoon of the 2nd July 1923.

A. MARR,

*Secretary to the Government of Bengal.*

## IRRIGATION DEPARTMENT.

### REVENUE.

### NOTIFICATIONS.

[Fourth publication.]

*No. 21.—The 19th June 1923.*—The following draft of amendments, which, in exercise of the powers conferred by sections 6 and 11 of the Canals Act, 1864 (Bengal Act V of 1864), the Governor in Council intends to make in the rules and schedules of rates of tolls (published in Bengal Government notification No. 5, dated the 19th June 1917, in Part I of the *Calcutta Gazette* of the 20th *idem*) for the Midnapore Canal with branch to Naraingar, is hereby published for the information of persons likely to be affected thereby.

II. The draft will be taken into consideration on or after the 5th August 1923, and any objections or suggestions received by the undersigned before that date will be duly considered :—

*Draft amendments.*

1. For clause (*c*) of rule 2 of the said rules, *substitute* the following, namely :—

"The maundage on which the amount of toll is calculated shall be reckoned to the nearest integral multiple of 12½ maunds, any remainder of less than 12½ maunds being rejected. In the case of boats exceeding 500 maunds by measurement, the maundage shall be reckoned to the nearest integral multiple of 50 maunds rejecting any remainder of less than 50 maunds."

2. In rule 7 of the said rules for the words "one rupee" *substitute* the words "two rupees per ticket."

3. In rule 8 of the said rules—

(*i*) for the words and figures "eight annas per 100 maunds" *substitute* the words and figures "one rupee per 100 maunds."

(*ii*) for the words "one anna per timber per day" *substitute* the words "two annas per timber per day."

(*iii*) for the words and figures "two annas per 100 per day" *substitute* the words and figures "four annas per 100 per day"

(*iv*) for the words and figures "eight annas per 100 per day" *substitute* the words and figures "one rupee per 100 per day."

4. In rule 12 of the said rules for the words and figures "four annas per 100 maunds" *substitute* the words and figures "eight annas per 100 maunds."

5. For the schedules of rates of tolls to be charged on the Midnapore Canal and on the Naraingar Distributary, mentioned at the end of the said rules, *substitute* the following, namely :—

**Schedule of rates of tolls to be charged on the Midnapore Canal and the Naraingar Distributary.**

*Entering from both the East and West.*

| Description. | Range I, 7 miles, Uluberia to Bansberia. | Range II, 8 miles, Bansberia to Kantapukur. | Range III, 11 miles, Daiman to Panskura. | Range IV, 11 miles, Panskura to Ballichak. | Range V, 13 miles, Ballichak to Mohanpur. | Range V, 9 miles, Ballichak to Kristnagar. | Range V, 4 miles, Kristnagar to Mohanpore. | Naraingar Distributary. Entering distributary from canal or vice versa. |
|---|---|---|---|---|---|---|---|---|
| | Rs. A | Rs. A. | Rs. A. | Rs. A. | Rs. A. | Rs. A. P | Rs. A. P. | Rs. A |
| Loaded vessels per hundred maunds. | 0 8 | 0 4 | 0 12 | 0 12 | 0 14 | 0 10 0 | 0 4 0 | 0 12 |
| Empty vessels per hundred maunds. | 0 4 | 0 2 | 0 6 | 0 4 | 0 7 | 0 5 0 | 0 2 0 | 0 6 |
| Timber in rafts or loose per timber. | 0 2 | 0 2 | 0 2 | 0 2 | 0 2 | 0 1 6 | 0 0 6 | 0 2 |
| Piles in rafts or loose per hundred piles. | 1 0 | 1 0 | 1 0 | 1 0 | 1 0 | 0 12 0 | 0 4 0 | 1 0 |
| Bamboos in floats per hundred | 0 4 | 0 4 | 0 4 | 0 4 | 0 4 | 0 3 0 | 0 1 0 | 0 4 |

NOTE.—Vessels which enter the canal at Kantapukur lock and do not proceed beyond 960 feet from that lock will be charged toll at the rate of two annas per 100 maunds, whether loaded or empty. Tolls will be realised at Uluberia, Bansberia, Kantapukur, Daiman, Panskura, Ballichak and Kristnagar toll stations.

*No. 81.—The 19th June 1923.*—The following draft of amendments, which, in exercise of the powers conferred by sections 6 and 11 of the Canals Act, 1864 (Bengal Act V of 1864), the Governor in Council intends to make in the revised rules and revised schedules of rates of tolls (published in Bengal Government notification No. 8, dated the 25th May 1915, in Part I of the *Calcutta Gazette* of the 26th *idem*) for the Hijili Tidal Canal and the portion of the Orissa Coast Canal lying in Bengal, is hereby published for the information of persons likely to be affected thereby.

II. The draft will be taken into consideration on or after the 5th August 1923, and any objections or suggestions received by the undersigned before that date will be considered :—

*Draft amendments.*

1. For clause (*c*) of rule 2 of the said rules, *substitute* the following, namely :—

"The maundage on which the amount of toll is calculated shall be reckoned to the nearest integral multiple of 12½ maunds, any remainder of less than 12½ maunds being rejected. In the case of boats exceeding 500 maunds by measurement, the maundage shall be reckoned to the nearest integral multiple of 50 maunds, rejecting any remainder of less than 50 maunds".

2. In rule 7 of the said rules for the words "one rupee" *substitute* the words "one rupee and eight annas per ticket".

3. In rule 8 of the said rules—

(*i*) for the words and figures "8 annas per 100 maunds" *substitute* the words and figures "12 annas per 100 maunds".

(*ii*) for the words "one anna per timber per day" *substitute* the words "one anna and six pies per timber per day."

(*iii*) for the words and figures "Two annas per 100 per day" *substitute* the words and figures "Three annas per 100 per day."

(*iv*) for the words and figures "Eight annas per 100 per day" *substitute* the words and figures "Twelve annas per 100 per day."

4. In rule 12 of the said rules for the words and figures "four annas per 100 maunds" *substitute* the words and figures "eight annas per 100 maunds".

5. For the three schedules of rates of tolls mentioned at the end of the said rules, *substitute* the following, namely :—

**Schedule of rates of tolls for local traffic to be charged on the Hijili Tidal Canal and the portion of the Orissa Coast Canal, Range III, lying within Bengal.**

| Description. | Hijili Tidal Canal. | | Orissa Coast Canal | | | |
|---|---|---|---|---|---|---|
| | Gewankhali lock to Etamagra and *vice versa*. | Tarapakia lock to Kalinagar lock and *vice versa*. | Bhaitagar lock to Mosagaon and *vice-versa* | Mosagaon to Contai and *vice versa*. | Mosagaon to Pichaboni and *vice versa*. | Pichaboni to Mirgoda and *vice versa*. |
| | Range I. | Range II. | | Range III. | | |
| | 11 miles. | 18 miles. | 9 miles. | 7 miles | 7 miles | 11 miles. |
| | Rs A. | Rs. A. | Rs. A. | Rs. A. | Rs A | Rs. A. |
| Vessels loaded per 100 maunds | 1 0 | 1 12 | 0 10 | 0 8 | 0 8 | 0 12 |
| Vessels empty per 100 maunds | 0 8 | 0 14 | 0 5 | 0 4 | 0 4 | 0 6 |
| Timber in rafts or loose per timber | 0 2 | 0 3 | 0 2 | 0 2 | 0 2 | 0 2 |
| Bamboos in floats or loose per 100 bamboos. | 0 4 | 0 6 | 0 4 | 0 4 | 0 4 | 0 4 |

NOTE.—Tolls will be charged at Gewankhali, Etamagra, Tarapakia and Kalinagar on the Hijili Tidal Canal and at Bhaitgar, Mosagaon and Pichaboni toll stations on the Orissa Coast Canal.

**Schedule of rates of tolls for through traffic to be charged on the Hijili Tidal Canal and the portion of the Orissa Coast Canal, Range III, lying within Bengal.**

| From— | To— | Loaded vessels per 100 maunds. | | | Empty vessels per 100 maunds. | | |
|---|---|---|---|---|---|---|---|
| | | Hijili Tidal Canal. | Orissa Coast Canal. | Total. | Hijili Tidal Canal. | Orissa Coast Canal. | Total. |
| | | Rs. A | Rs A. | Rs. A. | Rs A | Rs. A. | Rs A. |
| Gewankhali ... | Kalinagar and *vice versa* ... | 2 8 | ... | 2 8 | 1 4 | ... | 1 4 |
| Ditto ... | Mosagnon and *vice versa* ... | 2 8 | 0 8 | 3 0 | 1 4 | 0 4 | 1 8 |
| Ditto ... | Pichaboni and *vice versa*... | 2 8 | 1 0 | 3 8 | 1 4 | 0 8 | 1 12 |
| Ditto ... | Mirgoda and *vice versa* ... | 2 8 | 1 10 | 4 2 | 1 4 | 1 2 | 2 6 |
| Ditto ... | Contai and *vice versa* ... | 2 8 | 1 0 | 3 8 | 1 4 | 0 8 | 1 12 |
| Ditto ... | Baliaghye or Karikapatna and *vice versa* | 2 8 | 0 12 | 3 4 | 1 4 | 0 6 | 1 10 |

NOTE.—Tolls will be charged at Gewankhali, Etamagra, Terapakia and Kalinagar on the Hijili Tidal Canal and Bhaltgar, Surpal, Mosagaon and Pichaboni toll stations on the Orissa Coast Canal.

**Schedule of rates of tolls for local traffic to be charged on the Pass khals and Baliaghye drain.**

| Description. | Terapakia Pass khal from Terapakia lock to Bamberia and *vice versa* | Palaboni Pass khal from its junction with Terapakia khal at Anandapur to its junction with the Sadar khal and *vice versa*. | Baliaghye drain from Surpal to Karikapatna and Baliaghye and *vice versa*. |
|---|---|---|---|
| | 10 miles | 10 miles | 11 miles. |
| | Rs A. | Rs. A. | Rs. A. |
| Loaded vessels per 100 maunds ... | 1 0 | 1 0 | 1 0 |
| Empty vessels per 100 maunds ... | 0 8 | 0 8 | 0 8 |
| Timbers in rafts or loose per timber ... | 0 2 | 0 2 | 0 2 |
| Bamboos in floats or loose per 100 bamboos | 0 4 | 0 4 | 0 4 |

NOTE—Tolls will be charged at Terapakia and Surpal.

G. T. HUNTINGFORD,
*Secretary to the Government of Bengal (offg.).*

## DEPARTMENT OF AGRICULTURE AND INDUSTRIES.

### INDUSTRIES.

### NOTIFICATIONS.

**Minister in charge: The Hon'ble Nawab Saiyid Nawab Ali Chaudhuri, Khan Bahadur, C.I.E.**

*No. 2364.—The 3rd July 1923.*—Rai Rajeswar Das Gupta Bahadur, Deputy Director of Agriculture, is placed in charge of Western Circle.

**Minister in charge: The Hon'ble Nawab Saiyid Nawab Ali Chaudhuri, Khan Bahadur, C.I.E.**

*No. 2398Ind.—The 4th July 1923.*—The Government of Bengal (Ministry of Agriculture and Public Works) are pleased to appoint Mr. J. D. Balfour, of Messrs. Burn & Co., to be a member of the Advisory Board of Industries, Bengal, reconstituted under resolution No. 58Ind., dated the 4th January 1923, *vice* Mr. T. M. Shewell.

Calcutta.

**Minister in charge : The Hon'ble Nawab Saiyid Nawab Ali Chaudhuri, Khan Bahadur, C.I.E.**

**Calcutta.**

*No. 2471Ind.—The 5th July 1923.*—Mr. H. J. Stracey, senior Deputy Agent, East Indian Railway Company, is appointed to be a member of the governing body of the Calcutta Technical School, constituted under this department resolution No. 30T.-Ind., dated the 10th June 1921, *vice* Mr. H. A. M. Hannay. The member will hold office up to 9th June 1924.

J. T. DONOVAN,

*Secretary to the Government of Bengal (offg.).*

---

**EXCISE.**

**Minister in charge : The Hon'ble Nawab Saiyid Nawab Ali Chaudhuri, Khan Bahadur, C.I.E.**

**Burdwan.**

*No. 2513Ex.—The 9th July 1923.*—Babu Srish Chandra Roy, Sub-Inspector of Excise and Salt, Burdwan, is appointed to act as Inspector of Excise and Salt in that district, and is placed in charge of the Asansol distillery, during the absence, on leave, of Babu Hari Das Sen.

J. T. DONOVAN,

*Secretary to the Government of Bengal (offg.).*

---

## Orders by the Director of Agriculture, Bengal.

*No. 8768A.—The 3rd July 1923.*—Babu Dwijendra Nath Mukherjee, District Agricultural Officer, Naogaon, is granted leave on average pay for fifteen days, with effect from the 18th May 1923, or from any subsequent date on which he availed himself of it.

R. S. FINLOW,

*Director of Agriculture, Bengal (offg.).*

---

## Orders by the Registrar of Co-operative Societies, Bengal.

*No. 10605.—The 7th July 1923.*—In supersession of notification No. 1715, dated the 2nd February 1923, so far as it relates to the appointment of the Auditor of Co-operative Societies, Bhanguria, as liquidator of the Saver Co-operative Bank (registered No. 680 of 1917), I hereby appoint the Inspector of Co-operative Societies, Pabna, instead as liquidator of the said society.

J. M. MITRA,

*Registrar of Co-operative Societies, Bengal.*

---

## Orders by the Commissioner of Excise and Salt, Bengal.

*No. 7Exc.—The 3rd July 1923.*—Maulvi Kazi Abdur Razak, Inspector of Excise and Salt, Rangpur, is granted privilege leave for fifteen days, with effect from the 8th June 1923.

*No. 8Exc.—The 3rd July 1923.*—Babu Haridas Sen, Inspector of Excise and Salt, Burdwan, is granted leave on average pay for twenty days, with effect from the 2nd July 1923.

*No. 9Exc.—The 4th July 1923.*—Babu Santasil Baruya, Inspector of Excise and Salt, 24-Parganas, is granted one month's privilege leave, with effect from the 1st July 1923.

S. C. MUKERJEE,

*Commissioner of Excise and Salt, Bengal.*

## REVENUE DEPARTMENT.

### LAND REVENUE.

NOTIFICATIONS.

*No. 5069L.R.—The 7th July 1923.*—In exercise of the power conferred by sub-section (*2*) of section 49A of the Bengal Tenancy Act, 1885 (VIII of 1885), as amended by the Bengal Tenancy (Amendment) Act, 1918 (Act II B.C. of 1918), the Governor in Council is pleased to declare that the provisions of Chapter VIIA of the said Act shall apply to the following aboriginal caste or tribe living in the district or local area specified below, and that such caste or tribe shall be deemed to be aboriginals for the purposes of the said chapter :—

**Rajshahi.**

| Caste or tribe. | District or local area. |
|---|---|
| Sonthals ... ... ... | Rajshahi. |

M. C. MCALPIN,
*Secretary to the Government of Bengal.*

### LAND ACQUISITION.

*No. 5003L.A.—The 5th July 1923.*—In exercise of the powers conferred by section 48(*1*) of the Land Acquisition Act, I of 1894, the Governor in Council is pleased to withdraw from the acquisition of a piece of land measuring, more or less, 13 cottahs 13 chitaks and 17 square feet of standard measurement, equivalent to ·2286 of an acre, being premises No 114, Dhakuria Road, and bounded as described below, which was included in the area notified for acquisition under declaration No. 9827 L.A., dated the 16th November 1920, published at pages 2104-06, Part I of the *Calcutta Gazette* of the 17th idem, as subsequently amended by the notifications and the errata noted in the margin, and required for section B of Scheme No. XV of the Calcutta Improvement Trust (new main sewer road from Chetla to Ballygunge station) in ward No. XXI of the Calcutta Municipality :—

**Calcutta.**

(1) Notification No. 10137 L.A., dated the 22nd November 1921.
(2) Notification No. 2966 L.A., dated the 17th March 1922.
(3) Erratum No. 9171 L.A., dated the 19th October 1921.
(4) Erratum No. 9869 L.A., dated the 6th November 1922.
(5) Notification No. 8896 L.A., dated the 21st April 1923.

BOUNDARIES :

*North*—By premises No. 113, Russa Road South,
*East*—By Bhagabati Ganguli's Lane,
*South*—By premises No. 106, Dhakuria Road,
*West*—By premises No. 113, Dhakuria Road.

*No. 5013L.A.—The 5th July 1923.*—In exercise of the power conferred by section 48(*1*) of the Land Acquisition Act, I of 1894, the Governor in Council is pleased to withdraw from the acquisition of a piece of land measuring, more or less, 3 cottahs and 33 square feet of standard measurement, equivalent to ·0503 of an acre, being a portion of premises No. 14, Nurulla Doctor Lane, bounded as described below, which was included in the area notified for acquisition under declaration No 5687L.A., dated the 9th July 1918, published at pages 1055-56, Part I of the *Calcutta Gazette* of the 17th idem, and required by the Calcutta Improvement Trust for the street scheme known as scheme No VIIIA (Outer Park Street) in wards Nos. XX and XXI of the Calcutta Municipality, in the town of Calcutta—

**Calcutta.**

BOUNDARIES :

*North*—By Nurulla Doctor Lane,
*East*—By that portion of premises No. 14, Nurulla Doctor Lane, which has already been acquired on behalf of the Calcutta Improvement Trust,
*South*—By premises No. 15, Nurulla Doctor Lane,
*West*—By a public passage.

*No. 5105L.A.—The 7th July 1923.*—Mr. Basanta Kumar Mukharji, Subdivisional Officer of Balurghat, in the district of Dinajpur, is vested with the powers of a Collector, under the Land Acquisition Act, I of 1894, in that subdivision.

**Dinajpur.**

M. C. MCALPIN,
*Secretary to the Government of Bengal.*

## DECLARATION.

*No. 4990L.A.—The 5th July 1923.*—Whereas it appears to the Governor in Council that land is required to be taken by Government at the expense of the municipality, Barisal, for a public purpose, viz., for Municipal Free Primary School at Barisal, in the village of Bagura-Alokanda, pargana Chandradwip, zilla Bakarganj, it is hereby declared that for the above purpose a piece of land measuring, more or less, ·33 of an acre, bounded on the—

**Bakarganj.**

*North*—By settlement plots Nos. 3654 and 3663,

*East*—By portion of settlement plots Nos. 3661 and 3662,

*South*—By settlement plot No. 3666,

*West*—By settlement plot No. 3665,

is required within the aforesaid village of Bagura-Alokanda

This declaration is made, under the provisions of section 6 of Act I of 1894, to all whom it may concern.

A plan of the land may be inspected in the office of the Collector, Bakarganj.

M. C. MCALPIN,
*Secretary to the Government of Bengal.*

## DECLARATION

*No. 4993L.A.—The 5th July 1923.*—Whereas it appears to the Governor in Council that land is required to be taken by Government at the expense of the District Board of Bankura for a public purpose, viz., for the construction of a girls' school, in the village of Khatra, pargana Supur, zilla Bankura, it is hereby declared that for the above purpose a piece of land measuring, more or less, 1 bigha 11 cottahs and 1 chitak of standard measurement, equivalent to 0·51 of an acre, bounded on the—

**Bankura.**

*North*—By the lands of Prikiti Ranjan De and Sripaty Halder, and Fakir Dhoba's bastu,

*East*—By Dibakar Chutar's bastu and Excise Sub-Inspector's quarters,

*South*—By Harish Chandra Dhabal's patit land,

*West*—By public foot-path and Harish Chandra Dhabal's patit land,

is required within the aforesaid village of Khatra

This declaration is made, under the provisions of section 6 of Act I of 1894, to all whom it may concern

A plan of the land may be inspected in the office of the Collector of Bankura.

M. C. MCALPIN,
*Secretary to the Government of Bengal*

## DECLARATION.

*No 4996L.A.—The 5th July 1923.*—Whereas it appears to the Governor in Council that land is required to be taken by Government at the expense of the Corporation of Calcutta for a pubic purpose, viz., for a Primary School at 118, Linton Street, in ward No. XX of the Calcutta Municipality, in the town of Calcutta, it is hereby declared that for the above purpose a piece of land being premises No. 118, Linton Street, measuring, more or less, 7 cottahs 12 chitaks and 16 square feet of standard measurement, equivalent to ·1284 of an acre, bounded on the—

**Calcutta.**

*North*—By Linton Street,

*East*—By premises No. 120, Linton Street,

*South*—By premises No. 110, Linton Street,

*West*—By premises No. 116, Linton Street,

is required within the aforesaid ward No. XX in the town of Calcutta.

This declaration is made, under the provisions of section 6 of Act I of 1894, to all whom it may concern.

A plan of the land may be inspected in the office of the 1st Land Acquisition Collector at No. 2, Commercial Buildings, Calcutta

M. C. MCALPIN,
*Secretary to the Government of Bengal.*

## DECLARATION.

*No. 5006L.A.—The 5th July 1923.*—Whereas it appears to the Governor in Council that land is required to be taken by Government at the expense of the Commissioners for the Port of Calcutta for a public purpose, viz., for the construction of a waiting shed for ferry service at Metiaburaz, in the village of Metiaburaz, pargana Magura, zilla 24-Parganas, it is hereby declared that for the above purpose a piece of land measuring, more or less, 0·0057 of an acre, bounded on the—

**24-Parganas.**

*North*—By river Hooghly,

*East and South*—By the lands of Nawab Nasirul Mamalik Mirza Sujat Ali Beg, Khan Bahadur, Matwalli of Wakf estate,

*West*—By the land of the Commissioners for the Port of Calcutta,

is required within the aforesaid village of Metiaburaz.

This declaration is made, under the provisions of section 6 of Act I of 1894, to all whom it may concern.

A plan of the land may be inspected in the office of the Commissioners for the Port of Calcutta.

M. C. McALPIN,
*Secretary to the Government of Bengal.*

## DECLARATION.

*No 5054L A.—The 7th July 1923*—Whereas it appears to the Governor in Council that land is required to be taken by Government at the public expense for a public purpose, viz, for closing the breach in the 10th mile of Embankment No 15, Hoodah No 15, in the village of Gholmaguri, pargana Kashijora, zilla Midnapore, it is hereby declared that for the above purpose a piece of land measuring, more or less, ·05 of an acre, bounded on the—

**Midnapore.**

*North*—By paddy land of Srekantha Adhikari and others and Public Works Department embankment,

*East*—By Public Works Department embankment,

*South*—By paddy land of Thakur Das Naik and others,

*West*—By paddy land of Kumar Manji and others and Upendra Naik and others,

is required within the aforesaid village of Gholmaguri

This declaration is made, under the provisions of section 6 of Act I of 1894, to all whom it may concern

A plan of the land may be inspected in the office of the Land Acquisition Collector of Tamluk.

M. C. McALPIN,
*Secretary to the Government of Bengal.*

## DECLARATION.

*No. 5057L.A.—The 7th July 1923*—Whereas it appears to the Governor in Council that land is required to be taken by Government at the expense of the Bakarganj District Board for a public purpose, viz, for a tank at Namajpur, in the village of Namajpur, pargana Selimabad, zilla Bakarganj, it is hereby declared that for the above purpose a piece of land measuring, more or less, 1·14 acres, bounded on the—

**Bakarganj.**

*North*—By remaining portion of plot No. 1394,

*East*—By plot No. 1407,

*South*—By plot No. 1390 and remaining portion of plot No. 1391,

*West*—By remaining portions of plots Nos. 1391, 1393 and 1394,

is required within the aforesaid village of Namajpur.

This declaration is made, under the provisions of section 6 of Act I of 1894, to all whom it may concern.

A plan of the land may be inspected in the office of the Subdivisional Officer, Pirojpur.

M. C. McALPIN,
*Secretary to the Government of Bengal*

## DECLARATION.

*No. 5060L.A.—The 7th July 1923.*—Whereas it appears to the Governor in Council that land is required to be taken by Government at the public expense for a public purpose, viz., for constructing a ring bundh at Kamalpur, in 10th mile of embankment No. 3, Hoodah No. 2, in the village of Kamalpur, pargana Kutabpur, zilla Midnapore, it is hereby declared that for the above purpose a piece of land measuring, more or less, 1·03 acres and comprising portions of settlement plot Nos. 415, 429, 430, 431, 427 and 432, is required within the aforesaid village of Kamalpur.

**Midnapore.**

This declaration is made, under the provisions of section 6 of Act I of 1894, to all whom it may concern.

A plan of the land may be inspected in the office of the Collector of Midnapore

M. C. MCALPIN,
*Secretary to the Government of Bengal*

## DECLARATION.

*No. 5063L.A.—The 7th July 1923*—Whereas it appears to the Governor in Council that land is required to be taken by Government at the public expense for a public purpose, viz, for the construction of a mortuary in the village of Katia, pargana Buran, zilla Khulna, it is hereby declared that for the above purpose a piece of land measuring, more or less, 0·413 of an acre bounded on the—

**Khulna.**

*North*—By Ram Bhadra Karmakar's land,
*East*—By Municipal Road,
*South and West*—By Dwarika Nath Banerji's land,

is required within the aforesaid village of Katia

This declaration is made, under the provisions of section 6 of Act I of 1894, to all whom it may concern.

A plan of the land may be inspected in the office of the Subdivisional Officer, Satkhira.

M C. MCALPIN,
*Secretary to the Government of Bengal.*

## DECLARATION

*No. 5066L.A—The 7th July 1923*—Whereas it appears to the Governor in Council that land is required to be taken by Government at the public expense for a public purpose, viz, for the extension of the Sub-Registry office at Atrai, in the village of Beharipur, pargana Amrool, zilla Rajshahi, it is hereby declared that for the above purpose a piece of land being part of settlement plot No. 4 and measuring, more or less, 0·10 of an acre, is required within the aforesaid village of Beharipur

**Rajshahi.**

This declaration is made, under the provisions of section 6 of Act I of 1894, to all whom it may concern.

A plan of the land may be inspected in the office of the Subdivisional Officer of Naogaon.

M. C. MCALPIN,
*Secretary to the Government of Bengal.*

## DECLARATION.

*No. 5073L.A—The 7th July 1923.*—Whereas it appears to the Governor in Council that land is required to be taken by Government at the public expense for a public purpose, viz, for flood damage repairs to Takavi embankment No. 1, Hoodah No. 1 in Khanamohan section, in the villages of Serpur, Khanamohan, Barkhola and Digbarasati, pargana Sahapur, zilla Midnapore, it is hereby declared that for the above purpose the pieces of land altogether measuring, more or less, 3·99 acres and comprising settlement plots—

**Midnapore.**

Nos. 178, 181, 177, 182, 185 and 186 in mauza Serpur,
Nos. 578 and 577 and portions of plots Nos. 49 and 52 in mauza Khanamohan,
Nos. 355, 1 and 2 in mauza Barkhola,
Nos. 149, 141, 101, 94, 134 and 148, and portion of plot No. 104 in mauza Digbarasati,

are required within the aforesaid villages of Serpur, Khanamohan, Barkhola and Digbarasati.

This declaration is made, under the provisions of section 6 of Act I of 1894, to all whom it may concern.

A plan of the land may be inspected in the office of the Collector of Midnapore.

M. C. McALPIN,
*Secretary to the Government of Bengal.*

## DECLARATION.

**Rajshahi.**

*No. 5081L.A.—The 7th July 1923.*—Whereas it appears to the Governor in Council that land is required to be taken by Government at the expense of the Nator Municipality for a public purpose, viz., for constructing a hackney carriage stand at Alaipur, in the village of Alaipur, pargana Laskarpur, zilla Rajshahi, it is hereby declared that for the above purpose a piece of land measuring, more or less, 0·10830 of an acre and being a part of settlement plot No. 1641 of mauza Nator, is required within the aforesaid village of Alaipur, in mauza Nator.

This declaration is made, under the provisions of section 6 of Act I of 1894, to all whom it may concern.

A plan of the land may be inspected in the office of the Subdivisional Officer of Nator.

M. C McALPIN,
*Secretary to the Government of Bengal.*

## DECLARATION.

**24-Parganas.**

*No. 5084L.A.—The 7th July 1923.*—Whereas it appears to the Governor in Council that land is required to be taken by Government at the expense of the Khardah Municipality for a public purpose, viz., for the trenching ground with its approach road, in the village of Pansila, pargana Calcutta, zilla 24-Parganas, it is hereby declared that for the above purpose a piece of land measuring, more or less, 2 bighas 12 cottahs 8 chitaks and 11 square feet of standard measurement, equivalent to 0·8680 of an acre, bounded on the—

*North*—By the lands of Hari Charan Gangooli, Madan Mohan Mouri, Umesh Chandra Mouri and Bipradas Ghose,
*East*—By the land of Sarada fisherman and by the drain of old Calcutta road,
*South*—By the lands of Nagendra Nath Chatterji and others, Madan Mohan Mouri, Shekh Kinu Mondal and Sarada fisherman,
*West*—By the lands of Madan Mouri and Sarada fisherman,

is required within the aforesaid village of Pansila

This declaration is made, under the provisions of section 6 of Act I of 1894, to all whom it may concern.

A plan of the land may be inspected in the office of the Commissioners, Khardah Municipality.

M. C. McALPIN,
*Secretary to the Government of Bengal.*

## DECLARATION.

**Mymensingh.**

*No. 5087L.A.—The 7th July 1923.*—Whereas it appears to the Governor in Council that land is required to be taken by Government at the expense of the Netrokona Municipality for a public purpose, viz., for a Muhammadan burial ground at Netrokona, in the village of Satpai, pargana Mymensingh, zilla Mymensingh, it is hereby declared that for the above purpose a piece of land measuring, more or less, 6 bighas 7 cottahs 10 chittaks of standard measurement, equivalent to 2·11 acres, bounded on the—

*North*—By the A.-B. Railway land,
*East*—By Raghu Sardar's land (settlement plot No. 896), Sheikh Amsor's land (settlement plot No. 810), and Prasanna Nandy's land (settlement plot No. 811),
*South*—By the District Board roadside drain,
*West*—By path (settlement plot No. 1835),

is required within the aforesaid village of Satpai.

This declaration is made, under the provisions of section 6 of Act I of 1894, to all whom it may concern.

A plan of the land may be inspected in the office of the Collector of Mymensingh.

M. C. McALPIN,
*Secretary to the Government of Bengal.*

## DECLARATION.

*No. 5091L.A.—The 7th July 1923.*—Whereas it appears to the Governor in Council that land is required to be taken by Government at the expense of the Basirhat Municipality for a public purpose, viz, for trenching ground in the village of Naihati, pargana Baha, zilla 24-Parganas, it is hereby declared that for the above purpose a piece of land measuring, more or less, 0 5785 of an acre, bounded on the—

24-Parganas.

*North*—By the drain of Itinda road and lands of Uttam, Sadhan, Girindra, Jogendra, Baburam, Bhupati, Haricharan Mondal and others,

*East*—By the lands of Uttam, Sadhan, Girindra, Jogendra, Baburam, Bhupati, Haricharan Mondal and others and remaining lands of Kalicharan and Gayaram Sardar and others,

*South*—By remaining land of Kalicharan, Gayaram, Nibaran Sardar and others,

*West*—By the lands of Uttam, Sadhan, Girindra, Jogendra, Baburam, Bhupati and Haricharan Mondal and others and remaining lands of Hari Sardar and Aswini Mondal,

is required within the aforesaid village of Naihati.

The declaration is made, under the provisions of section 6, Act I of 1894, to all whom it may concern.

A plan of the land may be inspected in the office of the Commissioners of the Basirhat Municipality

M. C MCALPIN,
*Secretary to the Government of Bengal*

---

## Orders by the Conservator of Forests, Bengal.

*No 17For —The 21st June 1923*—The head-quarters of Mr J. C. M. Gardner, Deputy Conservator of Forests, attached to the Darjeeling Division, are changed from Darjeeling to Jorebungalow, with effect from the forenoon of the 12th June 1923

Darjeeling.

E. O SHEBBEARE,
*Conservator of Forests, Bengal (offg)*

## TREASURY NOTICE.

UNCOVENANTED DEPUTY COLLECTOR BABU KSHITISH CHANDRA HALDAR has been placed in charge of the Nadia Treasury, with effect from the 30th June 1923 (afternoon), and he is authorised to draw bills on other Treasuries

RAKHAL MOHAN BANERJI, for *Collector of Nadia.*

KRISHNAGAR, *the 2nd July 1923.*

## SHERIFF'S OFFICE, THE 11TH JULY 1923.

NOTICE is hereby given that the Fourth Criminal Sessions of the year 1923 of the High Court of Judicature at Fort William in Bengal, for the town of Calcutta and Factory of Fort William, and the places subordinate thereto, will be held at the Court House, in the town of Calcutta, on Monday, the 30th day of July instant, at 11 o'clock in the forenoon, and thenceforward from day to day until the said sessions be over And it is hereby proclaimed that all persons who are to prosecute any of the prisoners to be brought up for trial at the said sessions be present then and there to prosecute.

M M. ALI NAKEY, *Sheriff*

## সরিফ-আফিস সন ১৯২৩ সাল তারিখ ১১ই জুলাই।

সকলকে সমাচার দেওয়া যাইতেছে যে সুবে বাঙ্গালার ফোর্ট উইলিয়ম দুর্গের অধীন সহর কলিকাতার ও অন্যান্য স্থানের ফৌজদারী বিচার নিষ্পত্তি জন্য আগামী সন ১৯২৩ সালের ৩০শে জুলাই সোমবার বেলা ১১ ঘটিকার সময় এবং যে পর্য্যন্ত সেশিয়ানের কার্য্য শেষ না হয় প্রতিদিন উক্ত সময়ে কলিকাতার হাইকোর্টের আপন আদালত ঘরে সন ১৯২৩ সালের চতুর্থ ক্রিমিনেল সেশিয়ান বসিবেক এবং এতদ্দ্বারা প্রচার করা যাইতেছে যে যে সকল ব্যক্তি কোন কয়েদির বিরুদ্ধে ফৌজদারী মিছিল করিবেক তাহারা উক্ত স্থানে উক্ত সময়ে হাজির থাকিয়া মোকদ্দমা করে, ইতি।—

এম, এম, আলি নকি,
সরিফ।

## HIGH COURT NOTICES.

### CIVIL.

*The 30th June 1923.*

*No. 7271A.*—Babu Jogesh Chandra Chatarji, additional munsif of Kushtea and Ranaghat, in the district of Nadia, now employed at Kushtea, is vested with the powers of a Judge of a Court of Small Causes for the trial of suits cognizable by such a Court up to the value of Rs. 100, within the local limits of the Kushtea munsifi

*The 3rd July 1923*

*No 7576G*—The Hon'ble the Chief Justice is pleased to appoint Mr. Badr-ud-din Ahmed, B.A., to be an Assistant Registrar on the Appellate Side of the High Court, with effect from the forenoon of the 3rd July 1923.

*The 4th July 1923.*

*No. 7444A*—Babu Aswini Kumar Das, officiating Subordinate Judge of Midnapore, is vested with the powers of a Judge of a Court of Small Causes for the trial of suits cognizable by such a Court up to the value of Rs 500, within the local limits of the Sadar munsifi of Midnapore.

*The 6th July 1923.*

*No. 7627-A.*—Babu Mayataru Haldar, munsif of Vishnupur, in the district of Bankura, is vested with the powers of a Judge of a Court of Small Causes for the trial of suits cognizable by such a Court up to the value of Rs. 100, within the local limits of the Vishnupur munsifi.

*The 7th July 1923.*

*No. 7655A.*—Babu Narendra Nath Lahiri, Subordinate Judge, 24-Parganas, is vested with the powers of a Judge of a Court of Small Causes for the trial of suits cognizable by such a Court up to the value of Rs 500, within the local limits of that portion of the Alipore and Sealdah munsifis which lie outside the limits of the jurisdiction of Small Cause Court proper at Sealdah

By order of the High Court,

N G A. EDGLEY,

*Registrar*

### ORIGINAL SIDE

*The 2nd July 1923.*

THE Government of India in their Home Department letter No. F. 189-23-Judicial dated the 30th May 1923, having sanctioned the creation of a temporary post to be held by Mr. Maurice Remfry, Registrar, High Court, Original Side, Calcutta, on Rs 2,000 a month for a period of four months, the Hon'ble the Chief Justice has been pleased to make the following appointments with effect from the afternoon of Saturday, the 30th June 1923 —

Mr. Maurice Remfry, Registrar, etc., on Rs 1,800—2,000 to be on deputation and hold the temporary post of Rs 2,000 a month mentioned above.

Mr. S. C Mitra, Registrar in Insolvency, on Rs. 1,500—1,800, *vice* Mr. Maurice Remfry.

Babu Jyotish Chandra Mitra, Deputy Registrar, on Rs. 800—1,000, *vice* Mr. S. C. Mitra.

Babu Manmatha Nath Ganguly, Assistant Registrar, on Rs. 400—600, *vice* Babu Jyotish Chandra Mitra. Mr. F. Palsett, Shorthand Writer, on Rs 200—450, now drawing Rs. 380 and officiating Assistant Registrar on Rs. 200—300, *vice* Babu Manmatha Nath Ganguly.

Mr. D. Bose, Barrister-at-law, *vice* Mr. F Palsett. Mr. Bose is permitted to draw the maximum pay of the post, namely, Rs. 300, subject to the approval of the Government of India.

By order of the High Court,

S. C. MITRA,

*Registrar (offg.).*

## SMALL CAUSE COURT NOTICE.

NOTICE is hereby given under section 7 of Act IX of 1887 (the Provincial Small Cause Court Act) for the months of July, August and September 1923 or until further orders, that the Judge of the Court of Small Causes at Serampore and Howrah and Subordinate Judge of the 1st Court of Hooghly will hold his sittings as detailed below :—

1923

| | July | No of days | August | No of days. | September | No of days |
|---|---|---|---|---|---|---|
| Hooghly | 1st to 10th | 8 | 1st to 9th | 8 | 1st to 12th | 8 |
| Serampore | 11th to 18th | 7 | 10th to 17th | 7 | 13th to 20th | 7 |
| Howrah | 19th to 31st | 9 | 18th to 31st | 8 | 21st to 30th | 8 |

Excluding Sundays and holidays.

N N GHOSH, *Judge*

SERAMPORE, *the 19th June 1923.*

## ORDERS BY THE COMMISSIONERS OF DIVISIONS.

### NOTIFICATION

*No. 182 R G*—Babu Netai Gopal Sing, Sub-Deputy Collector, at the Sadar station of the district of Nadia, is allowed an extension of leave on average pay for seven days from the 6th June to 12th June 1923, in continuation of the leave granted to him in this office notification No 73 R G, dated the 1st May 1923

J. H LINDSAY, *Commissioner (offg)*

COMMR'S OFFICE, PRESY DIVN, CALCUTTA, *the 2nd July 1923*

---

### NOTIFICATION.

*No. 2210J.G.*—Babu Paresh Nath Chatterji, Probationery Sub Deputy Collector, Hooghly Sadar, is appointed as Circle Officer of Serampore in that district

J. N. GUPTA, *Commissioner*

COMMR'S OFFICE, BURDWAN DIVN, CHINSURA, *the 3rd July 1923*

### NOTIFICATION

*No. 2214J G*—Babu Anadi Nath Lahiri, Sub-Deputy Collector, Howrah, is transferred to the district of Midnapore and is posted to the Jhargram subdivision in that district.

J N GUPTA, *Commissioner*

COMMR.'S OFFICE, BURDWAN DIVN, CHINSURA, *the 3rd July 1923.*

### NOTIFICATION.

*No. 2219J.G.*—This office notification No 2085J.G, dated the 22nd June 1923, appointing Maulvi Ali Asghar, Sub-Deputy Collector, Serampore, in the district of Hooghly, as Circle Officer of Serampore, is hereby cancelled.

J. N GUPTA, *Commissioner.*

COMMR.'S OFFICE, BURDWAN DIVN., CHINSURA, *the 3rd July 1923*

## NOTIFICATION.

*No. 3028J.*—The following officers are transferred temporarily for training as Circle Officers under the Bengal Village Self-Government Act, V of 1919, to the Dacca district :—

(1) Babu Charu Chandra Roy, Sub-Deputy Collector, Mymensingh.
(2) „ Birendra Kishore Kar, Sub-Deputy Collector, Mymensingh.

A. N. MOBERLY, *Commissioner (offg.).*

COMMR.'S OFFICE, DACCA DIVN., DACCA, *the 3rd July 1923.*

## NOTIFICATION

*No 3084J* – Babu Akhil Chandra Ganguli, Sub-Deputy Collector, on leave, who has been posted to the Dacca Division in Government notification No. 6212A., dated the 23rd June 1923, is posted to the headquarters station of the Faridpur district.

A N. MOBERLY, *Commissioner (offg ).*

COMMR.'S OFFICE, DACCA DIVN., DACCA, *the 6th July 1923.*

## NOTIFICATION

*No. 3094J* —Babu Dhirendra Kumar Sen, Sub-Deputy Collector, Faridpur, is transferred temporarily to the Goalundo subdivision of that district.

A. N MOBERLY, *Commissioner (offg )*

COMMR 'S OFFICE, DACCA DIVN , DACCA, *the 6th July 1923*

## NOTIFICATION

*No. 2283J.G.*—Babu Shamapada Bhattacharji, Sub-Deputy Collector, on leave, is appointed as Circle Officer of Simlapal Circle, in the district of Bankura

J. N. GUPTA, *Commissioner*

COMMR 'S OFFICE, BURDWAN DIVN., CHINSURA, *the 7th July 1923*

## CORRIGENDUM.

*No 2200M.*—In this office notification No 1263M , dated the 29th May 1923, published at page 769 of Part I of the *Calcutta Gazette*, dated the 6th June 1923, *read* "Babu Gangaram Kundu" *for* "Babu Ganga Charan Kundu."

W. A. MARR, *Commissioner (offg.).*

COMMR.'S OFFICE, RAJSHAHI DIVN., JALPAIGURI, *the 7th July 1923*

## NOTIFICATION

*No 3071J.*—It is hereby notified for general information that, under rule 63 (2) of the Bengal Jail Code, 1919, the following gentlemen are appointed to be non-official visitors of the Patuakhali sub-jail in the district of Bakarganj for a period of two years with effect from the date of this notification :—

1. Maulvi Abdul Gaffur.
2. Babu Barada Kanta Sen

A. N. MOBERLY, *Commissioner (offg.).*

COMMR.'S OFFICE, DACCA DIVN., DACCA, *the 5th July 1923.*

## NOTIFICATION.

*No. 788M.*—It is hereby notified for general information that Saturday, the 11th August 1923, has been fixed for holding a by-election for the election of a Commissioner for ward No. III of the Howrah Municipality in place of Babu Kanai Lal Sadhukhan, removed.

J. N. GUPTA, *Commissioner.*

COMMR.'S OFFICE, BURDWAN DIVN., CHINSURA, *the 30th June 1923.*

NOTIFICATION.

*No. 3696G.*—It is hereby notified for general information that Saturday, the 4th August 1923, has been fixed for holding a by-election of a Commissioner in ward No. III of the Brahmanbaria Municipality, in the district of Tippera, in place of Babu Kamala Kanta Banik, deceased.

A. H. CLAYTON, *Commissioner (offg.).*

COMMR.'S OFFICE, CHITTAGONG DIVN., CHITTAGONG, *the 3rd July 1923.*

NOTIFICATION.

*No. 2186M.*—It is hereby notified for general information that Mr. D. Y. Anderson is removed, under section 20 (*1*) (*c*) of the Bengal Municipal Act, from his office as Commissioner of the Kurseong Municipality in the district of Darjeeling.

W. A. MARR, *Commissioner (offg.).*

COMMR.'S OFFICE, RAJSHAHI DIVN., JALPAIGURI, *the 5th July 1923.*

NOTIFICATION

*No. 2189M.*—It is hereby notified for general information that a bye-election will be held on Friday, the 20th August 1923, to elect a Commissioner of the Kurseong Municipality in the district of Darjeeling, *vice* Mr D. Y Anderson, removed, under section 20 (*1*)(*c*) of the Bengal Municipal Act

W. A MARR, *Commissioner (offg.).*

COMMR 'S OFFICE, RAJSHAHI DIVN, JALPAIGURI, *the 5th July 1923.*

NOTIFICATION.

*No. 6M.*—In supersession of this office notification No. 30M., dated the 26th February 1923, published at page 284, Part I of the *Calcutta Gazette* of the 28th February 1923, it is hereby notified for general information that Tuesday, the 31st July 1923, is fixed as the date for holding a fresh general election of Commissioners of the Tollygunge Municipality in the district of the 24-Parganas

J. H. LINDSAY, *Commissioner (offg.).*

COMMR 'S OFFICE, PRESY. DIVN., CALCUTTA, *the 6th July 1923.*

NOTIFICATION

*No. 3119J.*—It is hereby notified for general information that the next general election of Commissioners of the Patuakhali Municipality, in the district of Bakarganj, will be held on the 27th September 1923

A. N. MOBERLY, *Commissioner (offg )*

COMMR 'S OFFICE, DACCA DIVN., DACCA, *the 7th July 1923.*

NOTIFICATION.

*No. 3111J.*—It is hereby notified for general information that, under sub-section (*2*) of section 6 of the Bengal Village Self-Government Act, 1919 (Act V of 1919), the following gentlemen have been duly elected to be members of the Duptara union board in Araihazar police-station in the Narayanganj subdivision of the Dacca district .—

1. Babu Barada Kanta Sen Gupta.
2. „ Nibaran Chandra Das Gupta.
3. Maulvi Mafizuddin Ahammed.
4. Munshi Taizuddin.
5. „ Abu Said Khan
6. „ Abdul Hafez Bhuiah.

2. Under sub-section (3) of section 6 of the said Act, the following gentlemen have been appointed by the District Magistrate, Dacca, to be members of the aforesaid union board :—

1. Babu Syama Charan Deb Gupta.
2. „ Basanta Kumar Sen Gupta.
3. Golam Mahiuddin Mollah.

A. N. MOBERLY, *Commissioner (offg.).*

COMMR.'S OFFICE, DACCA DIVN, DACCA, *the 7th July 1923.*

NOTIFICATION.

*No. 3112J.*—It is hereby notified for general information that, under sub-section (2) of section 6 of the Bengal Village Self-Government Act, 1919 (Act V of 1919), the following gentlemen have been duly elected to be members of the Sadasadi union board in Araihazar police-station in the Narayanganj subdivision of the district of Dacca :—

1. Munshi Afazuddin Ahammed.
2. „ Abdul Karim.
3. Babu Sarat Chandra Poddar.
4. „ Sashi Bhusan Saha.
5. „ Kali Kanta Dhar
6. Mahammed Saritulla Mia.

2. Under sub-section (3) of section 6 of the said Act, the following gentlemen have been appointed by the District Magistrate, Dacca, to be members of the said union board :—

1. Babu Dwarika Nath Bhuia.
2. „ Hari Mohan Saha.
3. Maulvi Abdul Kader.

A. N. MOBERLY, *Commissioner (offg.).*

COMMR.'S OFFICE, DACCA DIVN., DACCA, *the 7th July 1923.*

NOTIFICATION.

*No. 3113J.*—It is hereby notified for general information that, under sub-section (2) of section 6 of the Bengal Village Self-Government Act, 1919 (Act V of 1919), the following gentlemen have been duly elected to be members of the Raipura union board in Raipura police-station in the Narayanganj subdivision of the Dacca district :—

1. Mahammed Abdul Bari Mia.
2. Babu Srish Chandra Ray.
3. „ Giridhar Pal Chowdhury.
4. „ Gobinda Chandra Pal Chowdhury.
5. „ Mahim Chandra Ray
6. Mahammed Ambar Ali Khandaker.

2. Under sub-section (3) of section 6 of the said Act, the following gentlemen have been appointed by the District Magistrate, Dacca, to be members of the aforesaid union board :—

1. Munshi Abdul Sattar Bhuiah.
2. „ Abdul Gafur.
3. Babu Rajkumar Pal Chowdhury.

A. N. MOBERLY, *Commissioner (offg.).*

COMMR.'S OFFICE, DACCA DIVN., DACCA, *the 7th July 1923.*

NOTIFICATION.

*No. 3114J.*—It is hereby notified for general information that under sub-section (2) of section 6 of the Bengal Village Self-Government Act, 1919 (Act V of 1919), the following gentlemen have been duly elected to be members of the Madhabdi union board in Narshingdi police-station, in the Narayanganj subdivision of the Dacca district :—

1. Babu Raj Kumar Chakraborty.
2. Mahammed Samed Ali.
3. „ Abdul Hekim Khandaker.
4. „ Wajuddin Sarker.
5. Babu Basanta Kumar Das.
6. Mahammed Aminuddin Bhuiah.

2. Under sub-section (3) of section 6 of the said Act, the following gentlemen have been appointed by the District Magistrate, Dacca, to be members of the aforesaid union board :—

1. Babu Jogendra Chandra Gupta.
2. Mahammed Khalil.
3. Babu Amrita Lal Datta.

A. N. MOBERLY, *Commissioner* (*offg.*).

COMMR.'S OFFICE, DACCA DIVN., DACCA, *the 7th July 1923.*

NOTIFICATION.

*No. 3115J.*—It is hereby notified for general information that under sub-section (2) of section 6 of the Bengal Village Self-Government Act, 1919 (Act V of 1919), the following gentlemen have been duly elected to be members of the Panchdona union board in Narsingdi police-station in the Narayanganj subdivision of the Dacca district :—

1. Babu Madhusudan Chakraborty.
2. Munshi Karamaddin Ahammed.
3. „ Samiruddin Ahammed.
4. Babu Radha Ballav Saha.
5. „ Srish Chandra Das.
6. „ Annada Charan Pal.

2. Under sub-section (3) of section 6 of the said Act, the following gentlemen have been appointed by the District Magistrate, Dacca, to be members of the aforesaid union board :—

1. Babu Purna Chandra Sen.
2. „ Harendra Narayan Sen.
3. Mahammed Amanulla Sarker.

A. N. MOBERLY, *Commissioner* (*offg.*)

COMMR.'S OFFICE, DACCA DIVN, DACCA, *the 7th July 1923.*

NOTIFICATION.

*No. 3116J.*—It is hereby notified for general information that, under sub-section (2) of section 6 of the Bengal Village Self Government Act, 1919 (Act V of 1919), the following gentlemen have been duly elected to be members of the Amdia union board in Narsingdi police-station in the Narayanganj subdivision of the Dacca district :—

1. Munshi Abdur Rahaman Bhuiah.
2. Babu Pratap Chandra Sen.
3. „ Surendra Kumar Das
4. Munshi Ahammed Ali Molla.
5. Babu Mahendra Chandra Chakraborty.
6. „ Amrita Lal Sen Gupta.

2. Under sub-section (3) of section 6 of the said Act, the following gentlemen have been appointed by the District Magistrate, Dacca, to be members of the aforesaid union board :—

1. Munshi Abdul Aziz.
2. Babu Harendra Chandra Gupta.
3. Munshi Ansar Ali.

A. N. MOBERLY, *Commissioner* (*offg.*).

COMMR.'S OFFICE, DACCA DIVN., DACCA, *the 7th July 1923.*

NOTIFICATION.

*No. 1533L.S.-G.*—It is hereby notified for general information that the Circle Officer of Contai police-station is appointed, under section 19(2) of the Local Self-Government Act (Bengal Act III of 1885), *ex officio* to be a member of the Contai Local Board in the district of Midnapore, *vice* Mr. Anil Kumar Roy, removed.

J. N. GUPTA, *Commissioner.*

COMMR.'S OFFICE, BURDWAN DIVN., CHINSURA, *the 30th June 1923.*

NOTIFICATION.

*No. 1536L.S.-G.*—It is hereby notified for general information that Mr. K. B. De and Babu Prabodh Chandra Ray are appointed, under section 19(*2*) of the Bengal Local Self-Government Act (Act III of 1885), to be members of the Bankura District Board, *vice* Mr. F. W. Robertson, resigned, and Babu Radha Gobinda Biswas, deceased.

J. N. GUPTA, *Commissioner.*

COMMR.'S OFFICE, BURDWAN DIVN., CHINSURA, *the 30th June 1923.*

NOTIFICATION.

*No. 167C.*—In exercise of the powers conferred on me by section 19 (*2*) of the Local Self-Government Act (Bengal Act III of 1885), and acting under the orders of the Local Government given in the exercise of the administrative control vested in them by section 29B of the same Act, I hereby appoint Maulvi Mafijal Haidar Chaudhury as a member of the Noakhali District Board in place of Khan Bahadur Majibul Haidar Chaudhury, deceased

A. H CLAYTON, *Commissioner* (*offg.*).

COMMR.'S OFFICE, CHITTAGONG DIVN, CHITTAGONG, *the 3rd July 1923.*

NOTIFICATION.

*No. 19L.S -G.*—It is hereby notified for general information that, under section 13 of the Bengal Village Self-Government Act V of 1919, read with rule 38 of the rules for the election and appointment of members, etc, of union boards under the said Act, Babu Phani Bhusan Mitra has been duly elected to be a member of the Aijganti union board within the jurisdiction of Palerhat police-station in the Sadar subdivision of the Khulna district, in place of Munshi Ferazuddin Molla, removed.

J. H. LINDSAY, *Commissioner* (*offg.*).

COMMR.'S OFFICE, PRESY. DIVN., CALCUTTA, *the 6th July 1923.*

---

NOTIFICATION.

*No. 1542L.S.-G.*—It is hereby notified for general information that under section 13 of the Bengal Village Self-Government Act, 1919 (Bengal Act V of 1919), read with rule 39 of the Rules for the election and appointment of members of union boards, Babu Upendra Nath Ghosh has been duly elected be a member for ward No. II of the Panchla union board in Panchla police-station in the Sadar subdivision of the district of Howrah, *vice* Babu Jatindra Mohan Bose, removed.

J. N. GUPTA, *Commissioner.*

COMMR.'S OFFICE, BURDWAN DIVN., CHINSURA, *the 30th June 1923.*

NOTIFICATION.

*No. 18L.S.-G.*— It is hereby notified for general information that under section 43 of the Bengal Local Self-Government Act, III (B.C.) of 1885, as amended, Munshi Aminuddy Molla has been duly elected to be a member for ward No. I of the Boral union committee within thana Sonarpur in the Sadar subdivision of the 24-Parganas district in place of Babu Sarat Chandra Bhattacharjee, deceased.

J. H. LINDSAY, *Commissioner* (*offg.*).

COMMR.'S OFFICE, PRESY. DIVN., CALCUTTA, *the 2nd July 1923.*

## NOTIFICATION.

*No. 785M.*—It is hereby notified for general information that under rule 20 (*b*) of the Manual of Rules for the management of charitable hospitals and dispensaries in Bengal, the following gentlemen have been appointed to be members of the Committee for the management of the charitable dispensary at Baidyabati in the district of Hooghly —

1. The Subdivisional Officer, Serampore ... } *Ex officio.*
2. The Civil Surgeon, Serampore ... }
3. Babu Nirmal Chandra Ghosh, B.L., Chairman, Baidyabati Municipality.
4. „ Nirmal Chandra Mukherjee, Vice-Chairman, Baidyabati Municipality
5. Dr Jatindra Nath Sen, L.M.S., Municipal Commissioner.
6. Babu Fanindra Nath Ghosal, ditto.
7. „ Mahadev Chandra Laha, ditto.
8. „ Haridas Ganguli.
9. „ Shyama Pada Mukherjee.
10. „ Bejoy Krishna Dey.
11. „ Jahar Lal Dey.
12. „ Bankim Chandra Chakraverty.

J. N. GUPTA, *Commissioner.*

COMMR'S OFFICE, BURDWAN DIVN, CHINSURA, *the 30th June 1923*

## NOTIFICATION.

IT is hereby notified for general information under rule 4, read with rule 3 of the rules for managing committees of Government high schools, that Babu Satya Charan Mukherjee has been appointed a member of the managing committee of the Uttarpara Government School, in place of Babu Shib Narayan Mukherjee, deceased, for the remaining period of the term of office

J. G DUNLOP, *District Magistrate*

HOOGHLY MAGISTRACY, *the 6th July 1923.*

# The Calcutta Gazette

WEDNESDAY, JULY 11, 1923.


## PART IA.

### *Orders and Notifications by the Government of India.*

The following notification, issued by the Government of India in the Home Department, published in the *Gazette of India*, dated the 30th June 1923, is republished for general information

L BIRLEY,
*Chief Secretary to the Government of Bengal*

NOTIFICATION

JUDICIAL

*Simla, the 27th June 1923*

*No. F.-418-23.*—The Hon'ble Mr. Justice G. C Rankin, Barrister-at-Law, a Judge of the High Court of Judicature at Fort William in Bengal, is granted leave on full allowances for one month and four days, with effect from the 27th July 1923.

C. W GWYNNE,
*Joint Secretary to the Government of India (offg.).*

The following order, issued by the Government of India in the Army Department, published in the *Gazette of India*, dated the 30th June 1923, is republished for general information.

L. BIRLEY,
*Chief Secretary to the Government of Bengal*

*Simla, the 29th June 1923*

## PART B.

### APPOINTMENT

AUXILIARY FORCE, INDIA

*No. 876.*—The undermentioned gentleman is granted a commission, with effect from the date specified :—

*The Eastern Bengal Railway Regiment.*

*To be Second Lieutenant.*

Joseph Conan Strahan. Dated 1st October 1922.

E. BURDON,
*Secretary to the Government of India.*

The following notification issued by the Government of India in the Department of Industries and Labour, published in the *Gazette of India*, dated the 30th June 1923, is republished for general information.

L. BIRLEY,
*Chief Secretary to the Government of Bengal.*

NOTIFICATION.

*Simla, the 30th June 1923.*

*No. M.-665.*—The following letter from the Government of India to local Governments and Administrations is published for general information :—

No. M.-665.

GOVERNMENT OF INDIA.

DEPARTMENT OF INDUSTRIES AND LABOUR.

MINES REGULATIONS.

FROM

A. H. LEY, ESQ., C.I.E., I.C.S.,
*Secretary to the Government of India,*

TO

ALL LOCAL GOVERNMENTS AND ADMINISTRATIONS.

*Dated Simla, the 22nd June 1923.*

SUBJECT :—*Employment of women in mines and introduction of a system of shifts.*

SIR,

I am directed to address you with regard to two important questions in connection with the regulation of mines, namely, the employment of women in mines and the introduction of a system of working by shifts

2. *The employment of women in mines.*—Section 20, sub-section (*2*) (*l*) of the Indian Mines Act, 1901, enables the Governor-General in Council or the Local Government to make rules prohibiting, restricting or regulating the employment of women below ground or on particular kinds of labour where such employment is attended by danger to the life, safety or health of such women. In the twenty-two years since the Act was passed no rules appear to have been made under this sub-section. It will be observed that rules could be made only if it could be proved in each case that the employment was attended by *danger* to life, safety or health and not because of objections based on general, social or hygienic considerations. When framing the Bill which has since become Act IV of 1923 and will come into force on the 1st July 1924, the Government of India considered carefully a proposal to prohibit forthwith the employment of women in mines by statute. They came to the conclusion that it would be inexpedient to make any such provision immediately effective in view of the fact that women form more than a third of the mining labour of the country and the immediate prohibition of their employment would very seriously disorganize a very important key industry. In the Bill introduced in the Legislative Assembly in September 1922, two provisions were inserted bearing on this point. In the first place it was proposed to prohibit the presence of all children below ground in a mine. This provision has since become law (section 26 of the Act of 1923), and will, it is anticipated, automatically involve the exclusion from mines of some proportion of the women who would otherwise work below ground. Secondly, in clause 30 (*d*) of the Bill it was proposed to give the Local Government power to prohibit, restrict or regulate the presence or employment in mines of women either above or below ground, or on particular kinds of labour. It will be noticed that this was a very much wider authority than either the Government of India or Local Governments possess under the Act of 1901. After the Bill was introduced there was considerable discussion on the subject in the press and elsewhere. The Joint Committee of the Indian Legislature to which the Bill was referred devoted particular attention to this point. In their report they made the following observations on the subject :—

"*Employment of women.*—The present law regarding the employment of women is contained in section 20 (2) (*l*) of Act VIII of 1901. This is a provision which enables rules to be made prohibiting, restricting or regulating the employment of women either below ground or on particular kinds of labour where the employment is attended by danger. The rule-making power vests

in the Governor-General in Council or the Local Government. The Bill referred to us in clause 30 (*d*) enables a Local Government, subject to control, to make rules prohibiting, restricting or regulating the presence or employment in mines of women, either above or below ground or on particular kinds of labour. It is, we think, generally realized that the absolute prohibition of the employment of women below ground in coal mines is a mere matter of time. It cannot be introduced at once because time must be given to employers to replace the labour of the 90,000 women who are at present working in mines. Some of us pressed for the inclusion of a statutory prohibition in the Bill with a provision that it should not come into force for five years after the passing of the Bill. We think, however, that this would involve such a radical alteration in the Bill that recirculation would be essential, and as we are reluctant to delay its passage, we think it desirable to attempt to effect a compromise. We have, in the first place, transferred the provision relating to the employment of women from clause 30 to clause 29 of the Bill, so that the power of control may vest in the Governor-General in Council. We have further re-drafted the provision so as to follow more closely the wording of the present law. We desire, however, to place on record a recommendation that the question of the employment of women below ground in mines should be taken up at a very early date with Local Governments with a view to prohibiting such employment either in all mines or in particular classes of mines at the end of a specified period, which we think should be about five years."

In accordance with the recommendation of the Joint Committee, section 29 (*j*) of the Act of 1923 empowers the Governor-General in Council "to make regulations.....for prohibiting, restricting or regulating the employment in mines or in any class of mines of women either below ground or on particular kinds of labour which are attended by danger to the life, safety or health of such women." I am to invite attention to the phraseology of the clause. The power conferred on the Government of India is not as wide as was proposed for Local Governments in the Bill as originally introduced, for, in the case of labour, *other than below ground*, the Government of India must be satisfied, as in the Act of 1901, that the labour of the women concerned is attended by danger to their life, safety or health.

3. In accordance with the suggestion made in the report of the Joint Committee and quoted above, I am to ask for the views of the Local Government on the question of framing regulations under clause (*j*) of section 29 of Act IV of 1923.

4. The question of the prohibition of the employment of women in mines was raised by the Secretary of State for India as long ago as 1890, when Lord Cross forwarded to the Government of India the proceedings of the Berlin Conference and suggested that Government should consider the advisability of legislating for the regulation of the employment of women in mines The Government of India took the question up along with the general proposals for the regulation of mines to insure the health and saftey of the workers The Bill framed in 1899, for the inspection and regulation of mines, contained a clause empowering an Inspector of Mines to prohibit the employment of women when such employment was dangerous, or unsuited, to female labour; and another clause empowering the Governor General in Council, and the Local Government, to make rules prohibiting, restricting or regulating the employment of women below ground or on particular kinds of labour. When the Bill was submitted to the Secretary of State for his approval, the Secretary of State noted that, while the Bill provided for the supervision and control of female labour, it did not prohibit the employment of women altogether, he warned the Government of India that, as the mining industry developed, it would become increasingly difficult to prohibit the employment of women, and suggested that the question of further safeguarding such employment should be carefully considered in Committee. When the Bill was circulated, the provisions regulating the employment of women aroused considerable criticism, and expression was given to the fear that if steps were taken to prevent their female relatives from going below ground with the male workers, the latter would themselves refuse to work in the mines. It was argued that the conditions of employment in Indian mines were fundamentally different from those in western countries; that Indian mine labour worked in family gangs, the women assisting their relatives and helping to swell their earnings and that, when proper precautions were taken to secure ventilation and to make the workings healthy, conditions in the mines were not unpleasant or prejudicial to health. When the Bill was finally considered in the legislature the provisions relating to the employment of women were altered into the form in which they appear in the Act of 1901.

5. Since that time, mining conditions have undergone a considerable change Indian mining is no longer in its infancy. The mines are deeper, and the risk of danger is accentuated. There is a steadily increasing body of public opinion, which strongly deprecates the continued employment of women in mines. The Government of India accept the view of the Joint Committee of the Indian Legislature that the time has now come to consider seriously the prohibition of employment of women underground, particularly in coal mines, in which probably the conditions of work are hardest and open to most objection. As stated above, however, more than a third of the total

mining community are women, and although manual labour in mines is to some extent being supplanted by machine cutters, it is an undoubted fact that the sudden removal of female labour from underground work in mines would seriously dislocate the industry, and possibly compel a number of mines to close down. The only way of minimizing such a dislocation would be by giving the mine-managers sufficient notice of the intentions of Government, to enable them to secure and train the new labour which they will require, when the underground employment of women is prohibited.

6. I am now directed to ask that the Government of India may be favoured with the views of the Local Government on the general proposition that the employment of women in mines, or in particular classes of mines, should be prohibited at some specified time, *e g*, five years after the new Mines Act comes into force. I am in particular to enquire whether the Local Government would make the prohibition a general one, or applicable only to certain classes of mines, such as coal mines, and whether the period of grace suggested before the prohibition comes into effect, viz., five years, is suitable. The Government of India are provisionally of opinion that the prohibition should apply only to workings which extend beneath the superjacent ground; there would appear to be no greater objection to the employment of women above ground or in open quarries or shallow pits than to their employment on ordinary earth-work But on this point too the Government of India would be glad of the views of the Local Government.

7. *The introduction of a system of shifts in coal mines.*—In the course of the discussions in the Indian Legislature on the clause enacted as section 23 of the new Indian Mines Act, which prescribes weekly limits of work for mine-labourers generally, it was contended in certain quarters that the prescription of a weekly limit did not go far enough; it was urged that in the coalfields miners worked sometimes for 18 hours a day, a practice which the prescription of a weekly limit would not stop It was recognized, however, that under present conditions of mine-labour in the coalfields it was impracticable to insist on a daily limit of hours, although it might be possible, if due warning were given to the mine-owners, to introduce at some later date a system of shifts, which would automatically restrict the hours which an individual labourer could work in a single day. I am to note here that the Act of 1923 does not authorise the enforcement of a system of shifts and if any such system is to be made compulsory, fresh legislation will be necessary.

8. From the point of view of the proper and economic working of the collieries there is little doubt that the introduction of a syftem of shifts would be an advantage. Instead of relying as at present on a fluctuating labour supply, which works for perhaps three days and absent itself for the remainder of the week, the mine-manager would be assured of a constant supply of regular labour. This argument was urged by Mr. Treharne Rees in 1919 after a careful examination of mining methods in the Indian coalfields; and the principle of a shift system appears generally to have commended itself to the Coalfields Committee in 1920, though that Committee were of opinion that in view of the then existing labour conditions it would be premature to enforce such a system by statute. The crux of the difficulty is undoubtedly the effect which the introduction of fixed and limited hours of work would have on the labour population at the mines. Although it is an accepted fact that the restriction of daily working hours to a reasonable limit ordinarily makes for a more contented and efficient labour force, it is certain that in the peculiar conditions of mining labour in the coalfields a statutory restriction of this nature, imposed without due warning, would be unwelcome to the miners and might quite possibly drive a number of them away to other employment, where they would be free of statutory interference. If such was the case, the proposed legislation, while doing little good to the labourers themselves, would seriously affect the coal industry and, by curtailing the output of coal, be a source of grave embarrassment to other industries which depend on coal for their source of power.

9. The Government of India are, however, provisionally of opinion that any such dislocation of the labour supply could be minimized by giving the industry ample warning that a compulsory shift system would be introduced in coal mines on a fixed date some years hence. They are inclined to the view that, if as appears to them probable, the change in the methods of work in the coal mines which the introduction of a system of shifts would involve would be to the ultimate advantage at once of the mine-owners and of the labourers themselves, the introduction of this change is probably only a matter of time. It might be possible in the first instance to arrange the shifts in such a manner as to interfere as little as possible with existing mining practice. For instance, it has been suggested that, to commence with, the day might be divided into two shifts of twelve hours each (6 A.M. to 6 P.M. and 6 P.M. to 6 A.M.). The Government of India are inclined to the view that, as the labourers become used to the stricter regulation of hours which a shift system postulates, the time will come when a shorter working day with definite rest intervals will have to be imposed.

10. I am to ask for the views of the Local Government on this question, both generally and with particular regard to the following points:—

(*a*) whether the introduction of a compulsory system of shifts is practicable and advisable;

(*b*) what period of grace should be given before any legislation enforcing such a system should be imposed;

(c) what limit should be placed on the working day, and what particular system of shifts should be enforced;

(d) whether such legislation should apply to any mines other than coal mines;

(e) if applied only to coal mines, whether it should be enforced in all coalfields without exception. Attention is in this connection invited to paragraph 47 of the Report of the Coalfields Committee. The Government of India believe that the views of that Committee that any such system, if adopted at all, should be adopted universally, are likely to meet with general approval.

11. The Local Government will realize that this question of the introduction of a system of shifts is on a different footing from the question of prohibiting the employment of women, since the latter can be effected by regulations made under the Act of 1923, while the former would require legislation. In these circumstances, the Local Government may find it convenient to deal with the two questions independently, making each the subject of a separate reply.

I have the honour to be,

Sir,

Your most obedient servant,

A. H. LEY,

*Secretary to the Government of India.*

**Orders by the Commissioner of Income-tax, Bengal.**

*No. 3363-I.C.T.—The 2nd July 1923.*—Babu Sisir Kumar Dutt in charge of Miscellaneous Salaries Section, Calcutta, is transferred to Burdwan as Assistant Income-tax Officer. Order No. 3130 C.T., dated the 28th June 1923, transferring Babu Hirak Chandra Choudhury to Burdwan is hereby cancelled.

E. N. BLANDY,

*Commissioner of Income-tax, Bengal.*

# The Calcutta Gazette

WEDNESDAY, JULY 11, 1923.

## PART IB.

***Educational Notices.***


### GOVERNMENT COMMERCIAL INSTITUTE, CALCUTTA.

#### The Evening Lectures.

Courses of evening lectures are delivered in the following subjects. A student can take up one subject or several subjects, provided the class hours permit him to attend the lectures in each subject :—

(*a*) Book-keeping (Elementary).
(*b*) Book-keeping (Advanced).
(*c*) Shorthand (Theory)
(*d*) Shorthand (Speed).
(*e*) Typewriting.
(*f*) English (including commercial correspondence, letter-drafting and précis-writing)
(*g*) Outlines of Political Economy
(*h*) Banking and Currency
(*i*) Annuities and Insurance.
(*j*) Mercantile Law.
(*k*) Accountancy and Auditing.

The courses of lectures commence in July and continue until the following April except the course of Accountancy and Auditing, which extend over two years.

(*a*) **Book-keeping (Elementary).**—Students having a satisfactory knowledge of English and Arithmetic are admitted. Text-book—Arthur Fieldhouse's Complete Book-keeping, up to 100 exercises including partnership accounts. The fee for the full session, July to April, is Rs. 24, payable in eight monthly instalments of Rs. 3 each. Classes are held three times a week from 6 to 7 P.M.

(*b*) **Book-keeping (Advanced).**—Students who have passed the Elementary Book-keeping Examination, or who can give satisfactory proof of their knowledge of Elementary Book-keeping up to the requisite standard, are admitted. Text-book—Complete Book-keeping by Arthur Fieldhouse. The fee for the full session, July to April, is Rs. 32, payable in eight monthly instalments of Rs. 4 each. Classes are held twice a week from 6 to 7 P.M.

(*c*) **Shorthand (Theory).**—Pitman's Shorthand is the system taught. Students having a sufficient knowledge of English are admitted at the beginning of the session in July. Students are also admitted in December, provided they have already a sufficient knowledge of Shorthand to enable them to appreciate the lectures in the session, December to April.

The minimum speed required to pass the examination is 80 words per minute. The class is held daily from 5 P.M.

The fee for the session, July to November, is Rs. 12, which may be paid in four monthly instalments of Rs. 3 each. The fee for the session, December to April, is Rs. 16, which may be paid in four monthly instalments of Rs. 4 each.

(*d*) **Shorthand (Speed).**—Students having a speed of 60 words per minute are admitted in July, and the class practice is from 60 to 120 words per minute.

Students having a minimum speed of 80 words per minute are admitted in December, and the class practice is from 80 to 140 words per minute.

In the examination the tests are at four grades of speed, 80, 100, 120, 140 words per minute, and at higher speeds if candidates can write more rapidly. Classes are held daily from 6 P.M. Fees are the same as for (*c*).

(*e*) **Typewriting.**—Beginners are admitted in July. Students having a minimum speed of 20 words per minute are admitted in December. Text-book—Practical Course in Touch Typewriting by Charles E. Smith. The minimum speed required to pass the examination at the end of April is 35 words per minute. Certificates are issued for 35, 40, 45, 50, 55, 60 words per minute. For each of the speed tests there is a corresponding accuracy test in tabulating. Classes are held at 5, 6 and 7 P.M. Tuition fees are the same as for (*c*). A stationery fee of Re. 1 is payable on admission.

**Combination of the above subjects and reduction of fee.**—If a student simultaneously takes up two or three of the subjects (*a*) to (*e*), a reduction of Re. 1 per instalment of each of the fees payable by him will be granted: for example, if a student is a member of both the Shorthand and the Elementary Book-keeping classes, he will have to pay instalments of Rs. 2 for each subject instead of Rs. 3 for the session, July to December.

(*f*), (*g*), (*h*), (*i*) **and** (*j*).—Classes are formed in these subjects if a sufficient number of candidates apply for admission. The fee for each subject is Rs. 3 for each series of ten lectures.

(*k*) **Accountancy and Auditing.**—There are two courses of year each for ordinary students, or one year for those who are already practising as Auditors, to prepare candidates for the Government examination of Diploma in Accountancy, which qualifies them to obtain the Government license to practise as Auditors. Students of this class have to attend Book-keeping and Mercantile Law classes, for which no extra fee has to be paid. The fee is Rs. 144, payable in advance in four half-yearly instalments of Rs 36 each in the case of ordinary students and Rs 72 in two half-yearly instalments of Rs. 36 each in the case of those who are practising as Auditors and hold a provisional license granted by Government

2. **Examinations.**—The examination in subjects (*a*) to (*j*) is held at the end of April, at the end of the year's course, under the control of the Government Commercial Institute Board, and successful candidates receive certificates signed by the Director of Public Instruction, Bengal, and countersigned by the Secretary to the Bengal Chamber of Commerce. The examination fee for each subject is Rs. 5.

3. **Attendance.**—Strict regularity and punctuality of attendance are observed. Students must attend 75 per cent of the lectures in order to appear at the examination. Classes are not held in the evening on Saturday.

4. **Standard of Admission.**—Candidates who have attended the lectures of the day course are eligible for admission Others will be admitted, provided they appear qualified for the class or classes they seek to join.

5. **Prizes.**—Prizes of Rs 50 each are offered by the Bengal Chamber of Commerce to the best candidates from the evening classes in subjects (*b*), (*d*), (*f*), (*g*), (*h*), (*i*) and (*j*). Three medals are offered by the Remington Typewriter Company to the best three students of either the day or evening classes in the Typewriting examination.

6. **Admission.**—Candidates for admission should send in their applications and register their names, with a deposit of fees, before the end of June Candidates who desire to be admitted in December should apply before the end of November.

7. **Athletics and other Institute activities.**—Students have to pay a fee of Re. 1 on admission for athletics and other institute activities.

8. Tuition fees for different subjects mentioned above may be slightly increased. The matter is under consideration of Government.

G K. SEN, *Principal (offg.)*.

CALCUTTA, *the 5th June 1923.*

## THE GOVERNMENT COMMERCIAL INSTITUTE.

### The Day Course.

1. There is a specialized Day Course extending over two years. Candidates who have passed the Matriculation Examination are eligible for admission. Others are admitted, provided they satisfy the Education Department, by passing a preliminary test examination of a similar standard, that they have sufficient general education to enable them to derive advantage from the teaching.

2. **Compulsory subjects:—**

(*a*) English (modern), and especially English Correspondence, including Commercial Correspondence, letter-drafting and precis-writing.

(*b*) Arithmetic, including Commercial and Mental Arithmetic.

(*c*) An Indian vernacular.

(*d*) Commercial Geography

(*e*) Book-keeping (Junior).

For an Indian vernacular, the Institute provides a thorough training in Bengali Students taking up any other vernacular are given directions for the examination for which they have to prepare themselves Anglo-Indian candidates who have passed the Higher Standard examination in an Indian vernacular held by the Inspector of European Schools, Bengal, or who have passed the Lower standard examination in an Indian vernacular held by the Board of Examiners, will be further examined in the same vernacular in the following manner :—

(1) They will be examined orally to test their command of the vernacular for the ordinary purposes of business.

(2) They will have to translate into English a business letter dictated in the vernacular, and will be examined in both the dictation and translation.

3. **Optional Subjects.**—Shorthand and Typewriting—(A candidate may take up one or both, according to his option).

A student must take up all the compulsory subjects and must pass in each to obtain the final certificate. Passing in the Optional subjects—Shorthand and Typewriting—is counted towards a prize.

4. **Examination.**—At the end of the first year's course, an examination is held to determine promotion to the second year class and to decide the award of scholarships. At the end of the two years' course the final examination is held towards the end of the April or the beginning of May. A candidate who fails in one of the five compulsory subjects is not eligible for a pass certificate. A candidate who fails in one subject only in the final examination may appear again in the final examination in the following year in that subject without attending the class. A candidate who fails in only two subjects in the final examination may appear in the final examination in the following year in those subjects, provided that he attends the classes in those subjects.

A candidate who attends a final examination to be examined in a subject in which he has previously failed must pass again in English, if English was not a subject in which he had failed, in order to obtain the diploma.

5. **Text-books.**—The following text-books are prescribed :—

(*a*) English—Hooper and Graham's "Home Trade."

(*b*) Arithmetic—Grant and Hill's "Commercial Arithmetic" and "Mental Arithmetic."

(*c*) Bengali—"Kapalkundala" by Bankim Chandra Chatterjee, and "Prathamik Babosasinksha" by Santosh Nath Sett.

(*d*) Geography—"Commercial Geography of the World" by A. J. Herbertson, "A Short Commercial Geography" by L. W. Lyde, "A School Economic Atlas" by J. G. Bartholomew and "A new Geography of the Indian Empire, Burma and Ceylon" by Morrison.

(*e*) Book-keeping—Arthur Fieldhouse's "Complete Book-keeping."

(*f*) Shorthand—Pitman's Shorthand Instructor, Centenary edition.

(*g*) Typewriting—Practical Course in Touch Typewriting by Charles E. Smith.

The text-books cost about Rs. 35.

6. **Session and Fees.**—The session begins about the end of June and closes about the end of April. The usual summer and Puja vacations are given. The students have to pay an admission fee of Rs. 5 and monthly tuition fee at the rate of Rs. 5 beginning from June. The final examination fee is Rs. 8. Tuition fees are to be paid monthly in advance after admission. Stationery fee of Re. 1 is payable once a year at the beginning of each session by the students who have taken Typewriting as optional subject. A yearly subscription of Re. 1 is also payable at the beginning of each session by students of both the first and second year classes for Athletics and other Institute activities.

7. **Attendance.**—Strict regularity of attendance is enforced. Students attending less than 75 per cent. of the lectures are debarred from promotion to the second-year class or from appearing at the final examination. Classes are held from 10-30 A.M. to 4 P.M. with half-an-hour's interval daily from 1-30 to 2 P.M On Saturdays classes are held from 10-30 A.M. to 1-30 P.M.

8. **Scholarships and Prizes.**—Three scholarships of Rs. 12 each per mensem, tenable for one year are awarded to those students of the first-year class who, amongst those admitted, have secured the highest marks in English at the Matriculation Examination of the Calcutta University. Three scholarships of Rs. 20 each per mensem, tenable for one year, are awarded to those students of the second-year class who obtained the highest total marks at the examination held at the end of the first year's course. Holders of Junior and Senior scholarships at the Matriculation Examination are not eligible for these scholarships. The best two students in the final examination at end of two years' course obtain prizes of Rs. 75 and 50, respectively, offered by the Bengal Chamber of Commerce. The Remington Typewriter Company present medals to the best three students in typewriting at the final or special examination.

9. Applications for admission must reach the Principal before the 30th June every year. As only a limited number can be enrolled, priority of application is considered.

(A separate prospectus is issued for the evening lectures.)

G. K. SEN, *Principal (offg.).*

CALCUTTA, *the 5th June 1923.*

## UNIVERSITY OF CALCUTTA.

### NOTICE.

SCHOOLS applying for the first time for recognition are required to submit their applications, normally, as soon as they open class IX, *i.e.*, in January.

J. CHAKRAVARTI, *Registrar (offg.).*

SENATE HOUSE, *the 6th July 1923.*

## RS BY THE HON'BLE THE VICE-CHANCELLOR AND SYNDICATE OF THE CALCUTTA UNIVERSITY.

THE undermentioned candidates are declared to have passed the Matriculation Examination, 1923:—

(Arranged according to Roll Numbers.)

The asterisk, prefixed to the name of a candidate, indicates that he has obtained not less than three fourths of the aggregate number of marks; and the letter or letters, affixed to the name of a candidate, indicate that he has obtained not less than four-fifths of the marks in a subject or subjects.

E indicates English.
M " Mathematics (Compulsory).
V " Vernacular Composition.
L " Second Language (Compulsory)
m " Mathematics (Additional).
l " Second Language (Additional).
H " History.
G " Geography.
Mc " Mechanics.

| Roll | No. | Name. | Age | Division in which the candidate has passed. |
|---|---|---|---|---|
| | | **Ariadaha Kalachand H. E. School.** | | |
| Cal. | 1 | Sudharsusekhar Sinha (m) ... ... | 16 5 | First |
| | 2 | Balaichandra Mitra ... | 18-1 | Second |
| | 3 | Atalbihari Bhattacharyya ... | 19 10 | Second |
| | 4 | Binaykrishna Bandyopadhyay ... | 17-1 | Second |
| | 5 | Chintamani Mukhopadhyay ... | 17-2 | First |
| | 6 | Arunsai Bhattacharyya | 17-3 | First |
| | 7 | Radhikamohan Bandyopadhyay ... | 16-11 | First |
| | | **St. Paul's High School, Calcutta.** | | |
| | *8 | Nirmalkumar Mundle (MmG) ... | 18 | First |
| | 9 | Jitendranath Dass (Mm) | 17-5 | First |
| | 10 | Carolk Goldsmith | 19-2 | First |
| | 11 | Benjamin A Ahmed .. | 19 2 | First |
| | 12 | Benjamin Saliba Thomas ... | 18 5 | Second |
| | 13 | Jool Nityanande Biswas | 20-10 | Second |
| | 14 | Bromaykumar Dey ... | 18 1 | First |
| | 15 | Sachendranath Bose ... | 18 10 | Second |
| | 17 | Isanchumar Banerji ... | 19,8 | Second |
| | 18 | Dhirendrakumar Dey ... | 18 | Second |
| | | **Burul H. E. School.** | | |
| | 19 | Nandalal Basu (M) ... | 17 9 | First |
| | 20 | Bakkeswar Kotal ... | 18-1 | First |
| | 21 | Kanailal Haya (Mm) | 17-3 | First |
| | 22 | Atulkrishna Ray ... | 17 | First. |
| | 23 | Harihar Ghosh ... | 18 1 | First. |
| | 24 | Shaikh Abdul Rahaman Mollah ... | 19 2 | Second |
| | 25 | Upendranath Adak ... | 20-3 | Second |
| | | **St. Anthony's School, Calcutta.** | | |
| | *26 | A S M. Ayub (Mml) | 16-6 | First |
| | 27 | Md Dawood Khan (M) | 16 2 | First |
| | 28 | Syed Ahsan Shere ... | 19-2 | First. |
| | 30 | Khalil Ahmad ... | 21-2 | Second. |
| | | **St. Mary's School, Calcutta.** | | |
| | 35 | Jatindranath Ghosh (Mm) ... ... | 16-3 | First. |
| | 36 | Balaram Bandyopadhyay (Ml) ... | 17-2 | First. |
| | 37 | Saurendrakumar Chaudhuri (M) ... | 17-4 | First |

| Roll | No | Name | Age | Division in which the candidate has passed. |
|---|---|---|---|---|
| | | **St. Mary's School, Calcutta.** | | |
| Cal. | 38 | Harihar Sarkar ... | 16 11 | Second |
| | 39 | Sudhansunath Datta ... | 16-6 | Second |
| | 43 | Bibhutibhushan Datta | 16-11 | First |
| | 44 | Shashadhar Shah (MV) | 18-2 | First |
| | 49 | Krishnakinkar Mukhopadhyay ... | 18-5 | First |
| | 50 | Arunchandra Ray .. | 17 | Second |
| | 51 | Bibhutibhushan Chattopadhyay ... | 23 8 | First |
| | 52 | Bimalendranath Ghosh | 17-2 | Second |
| | 53 | Gopalchandra Majumdar | 17-3 | Second |
| | 54 | Jayantakumar Basu ... | 18 3 | Third |
| | 55 | Md Sabdar Rahman ... | 23-2 | Second |
| | 56 | Sadahari Dattachaudhuri . ... | 19 1 | Second. |
| | 57 | Prabhatchandra Sinha | 16 1 | Second |
| | 58 | Lalitmohan Das ... | 18-1 | First |
| | 59 | Satinath Raychaudhuri | 16-4 | Second |
| | 62 | Nandakisor Bhattacharyya. | 18 3 | Second. |
| | 63 | Dwijendranath Basu ... | 18-1 | Second. |
| | 64 | Bhudeb Chandra Adhikari | 17-1 | Third. |
| | 65 | Brajkishore Chaubey ... | 19 8 | First |
| | | **Bawali H. E. School.** | | |
| | 66 | Bhupalchandra Chakrabarti | 20 | First |
| | 68 | Annadaprasad Pramanik | 20 1 | First |
| | 69 | Susilkumar Das (ML) | 16-4 | First |
| | 70 | Kabetsudha Basu ... | 16 4 | First |
| | 72 | Kalipada Chaudhuri ... | 16-10 | First |
| | 74 | Bholanath Mandal ... | 17 5 | Third |
| | 75 | Rajendranath Bhaumik (V) ... | 19-2 | Second |
| | 76 | Badyanath Acharyya... | 21 1 | Second |
| | | **J. M. Training School, Majilpur.** | | |
| | 77 | Bankimchandra Chaudhuri (MVm) ... | 17 | First |
| | 78 | Bishnupada Pal (Mm)... | 17-3 | First. |
| | 79 | Achalbihari Sarkar (Mm) ... | 16-2 | First. |
| | 80 | Ramdas Kayal (Mm) ... | 18-7 | First |
| | 81 | Bijaykrishna Bhattacharyya (Mm) ... | 18-1 | First. |
| | 82 | Akkasah Jamader ... | 19 9 | First. |
| | 83 | Jaykrishna Bhattacharyya (m) ... | 17-2 | First |

| Roll | No. | Name. | Age. | Division in which the candidate has passed. |
|---|---|---|---|---|
| | | **J. M. Training School, Majilpur.** | | |
| Cal. | 84 | Tulsicharan Baidya ... | 18-3 | Second |
| | 85 | Tulsicharan Bhattacharyya ... | 19-6 | Second. |
| | 86 | Subodhchandra Rakshit (Mm) ... | 18 3 | First |
| | 87 | Sudhirkumar Bhattacharyya ... | 17 3 | Second |
| | 88 | Prabodhchandra Purkait (M) ... | 20 11 | First |
| | 89 | Mahendranath Ghosh (m) .. | 17 1 | First |
| | 90 | Harisadhan Chattopadhyay (M) ... | 19-1 | First |
| | 91 | Haripada Chakrabarti | 16-11 | Second |
| | 92 | Kaligopal Bandyopadhyay (Mm) ... | 16 5 | First |
| | 93 | Ratikanta Mandal (m) | 22-10 | First |
| | 94 | Rasamay Haldar (Mm) | 17-8 | First |
| | 95 | Susilkumar Chakrabarti | 18-4 | Second |
| | 97 | Hridaynath Khamaru (M) ... | 20 | First |
| | 98 | Arjunchandra Haldar ... | 19 1 | Second |
| | 99 | Nagendranath Chakrabarti (m) ... | 18-6 | Second |
| | 100 | Bhabataran Pal ... | 18 1 | Second. |
| | 101 | Kalipada Bikram ... | 18-9 | Second. |
| | 102 | Narendranath Mandal (Mm) ... | 16 5 | First |
| | 103 | Satyacharan Bandyopadhyay (M) ... | 16-8 | First |
| | 105 | Nalinbhushan Bhattacharyya (Mm) ... | 19-1 | First |
| | 106 | Bhupaticharan Naskar (m) ... | 23 5 | Second |
| | 107 | Durgapada Das ... | 19-8 | Second |
| | | **Jagatballabhpur H. E. School.** | | |
| | 108 | Tarapada Chakrabarti (Mm) ... | 16 6 | First |
| | 109 | Jatindranath Nandi .. | 18 | First |
| | 110 | Jogeschandra Pal ... | 18 | First |
| | 111 | Pasupati Bandyopadhyay ... | 16-9 | Second |
| | 112 | Narendranath Nandi ... | 20-7 | Second |
| | 113 | Basudeb Chattopadhyay ... | 17 1 | First. |
| | | **Brahmo Boys' School.** | | |
| | 116 | Sudhindranath Bandyopadhyay (m) ... | 16-7 | First |
| | 117 | Anantakumar Basu ... | 16-10 | First |
| | 118 | Rameschandra Datta (M) ... | 20-6 | First |
| | 119 | Lalitmohan De ... | 17-1 | First. |
| | 120 | Sureshranjan Khastgir (Mm) ... | 16-10 | First |
| | 122 | Sisirbhushan Mitra ... | 16-9 | First. |
| | 123 | Santoshbhushan Rakshit ... ... | 18-2 | First. |
| | 124 | Sanatkumar Ghosh ... | 16 | First |
| | 125 | Purnananda Saha ... | 18-3 | First. |
| | 127 | Jyotirmay Ray ... | 18-8 | First |
| | 129 | Sripatiprasanna Thakur | 20-10 | Second |
| | 130 | Bhaleschandra Chakrabarti ... | 19-7 | Second. |
| | 131 | Jogeschandra Pal ... | 20-9 | Second |
| | | **Sanskrit Collegiate School.** | | |
| | 133 | Amulyadhan Bandyopadhyay ... | 18-5 | Second |
| | 134 | Prabalchandra Bandyopadhyay ... | 18 10 | First |
| | 135 | Bholanath Bhattacharyya (Mm) ... | 19 | First |
| | 136 | Krishnadas Bhattacharyya ... | 17-7 | First |
| | 137 | Khagendranath Chattopadhyay ... | 16 11 | First |
| | 138 | Sanatkumar Chattopadhyay (m) ... | 16-1 | First |
| | 139 | Manatoshkumar Gangopadhyay (M) ... | 17-2 | First. |
| | 140 | Jatischandra Ghosh .. | 16 | First |
| | 141 | Panchanan Mukhopadhyay ... | 20-6 | Second. |
| | 142 | Mrityunjay Ray ... | 21 | First |
| | 143 | Taraknath Ray ... | 16-9 | First |
| | 144 | Nirgunhari Bandyopadhyay ... | 17 11 | First. |
| | 145 | Achyutananda Bandyopadhyay ... | 18 | Second. |
| | 147 | Phatikchandra Mitra .. | 18-5 | First. |
| | 148 | Amilkrishna Mukhopadhyay ... | 18 | Second |
| | | **Mugkalyan H. E. School.** | | |
| | *149 | Kalikinkar Raychaudhuri (Mml) ... | 18-7 | First |
| | 150 | Hrishikes Bandyopadhyay (ml) ... | 16 8 | First |
| | 151 | Bhriguram Basu (m) .. | 20-6 | First |
| | 152 | Parbatisankar Chakrabarti (m) ... | 16-8 | First |
| | 153 | Bibhutibhushan Maiti (m) ... | 17-7 | First. |
| | 154 | Hrishikes Samanta (Vl) | 17 | First |
| | 155 | Sisirkumar Raychaudhuri ... | 16-7 | First |
| | 156 | Pasupati Ghosh ... | 17-1 | Second |
| | 157 | Shaik Anwaral Haque | 19-2 | Second |
| | 158 | Shaikh Osman Gani ... | 18-1 | Second |
| | 159 | Shaikh Sakhawat Hossain ... | 25-9 | Second |
| | | **St. Mary's School, Calcutta.** | | |
| | 160 | Rajendranath Maiti ... | 19-1 | Second. |
| | | **Barisha H. E. School.** | | |
| | 162 | Susilkumar Chattopadhyay (MLml) ... | 16-6 | First |
| | 163 | Lalitmohan Marak (l)... | 18 | First. |
| | 164 | Tarapada Chattopadhyay ... | 17-6 | First. |
| | 165 | Bhabendranath Raychaudhuri (M) ... | 18 | First. |
| | 166 | Makhanlal Basu ... | 21-8 | First. |
| | 167 | Ramendranath Datta ... | 17-7 | First. |
| | 168 | Gaurgopal Goswami ... | 16-8 | First. |
| | 169 | Nandalal Pal ... | 19-8 | First. |
| | 170 | Bibhutibhushan Mitra | 18-2 | First. |
| | 171 | Biweswar Majumdar (H) ... | 17 2 | First. |
| | 172 | Sudhirchandra Matilal | 17-3 | First. |
| | 173 | Kalicharan Bandyopadhyay ... | 18-5 | Second |
| | 174 | Niradkumar Chattopadhyay ... | 18-2 | Third. |
| | | **C. M. S. High School, Garden Reach.** | | |
| | *175 | Basantakumar Basu (MLml) ... | 20-11 | First. |
| | *177 | Panchanan Das (MLml) | 17-11 | First. |
| | 178 | Panchanan Daschosh... | 18 | First |
| | 179 | Kisorimohan Datta (m) | 17-11 | First. |

| Roll. | No. | Name. | Age. | Division in which the candidate has passed. |
|---|---|---|---|---|
| | | **G. M. S. High School, Garden Reach.** | | |
| Cal. | 180 | Tarapada Jati (Ml) | 19 10 | First. |
| | 181 | Kalikrishna Majumdar | 16 1 | Second |
| | 182 | Bankimchandra Pal ... | 17-9 | Second. |
| | 184 | Nanigopal Sarkar (V) ... | 17-8 | First. |
| | 186 | Panchanan Bandyopadhyay ... | 17-1 | Second |
| | 187 | Nanigopal Chakrabarti (l) | 16-7 | First |
| | 188 | Indubhushan Chattopadhyay ... | 17-2 | Third. |
| | 189 | Baidyanath Ghosh ... | 17-5 | Third |
| | 192 | Sailendranath Mukhopadhyay ... | 16-11 | First |
| | 193 | Banamali Naskar .. | 18-8 | First. |
| | 194 | Abdul Goffar ... | 16-10 | Second |
| | 195 | Mohommed Yaqub Khan ... ... | 19-10 | Second |
| | 196 | Aboo Mohommad Zaffar | 16-11 | Second |
| | | **Armenian College.** | | |
| | 199 | William Alexy Thaddeus (M) ... | 17-9 | First |
| | 200 | Alexy Gregory Sookias | 16-3 | First |
| | 201 | Arshan Mesrovl Isaia | 18-6 | First |
| | | **Pantihal Damodar Institution.** | | |
| | 202 | Saurindrakumar Saha (Mm) ... ... | 18-1 | First |
| | 203 | Jaykrishna Mandal (Mm) ... | 17 6 | First |
| | 204 | Durgapada Mandal (Mm) .. | 16-7 | First |
| | 205 | Sudhansumohan Datta (m) | 16-9 | First |
| | 206 | Sudhirchandra Maiti ... | 17-4 | First |
| | 207 | Saurendranath Mandal | 17-11 | First |
| | 208 | Arabinda Saha . | 18-7 | First |
| | 209 | Binaykrishna Pramanik | 18-6 | First |
| | 210 | Akshaykumar Majumdar ... | 17-3 | Second |
| | | **Kosab Academy.** | | |
| | 211 | Dhirendranath Basu (V) | 16 1 | First |
| | 212 | Kalikrishna Basu ... | 17 | First |
| | 213 | Balaichand Das (m) | 18 | First |
| | 214 | Prabodhendrakrishna Mitra (Mm) . | 17-1 | First |
| | 215 | Abaniranjan Mukhopadhyay (Vm) .. | 19 1 | First |
| | 216 | Parbaticharan Mukhopadhyay ... | 24 | Second |
| | 217 | Girbanlal Basak ... | 16 8 | Second |
| | 218 | Hrishikes Datta ... | 20-2 | Second |
| | 219 | Gopalchandra Ghoshal (Mm) .. | 16-3 | First |
| | 222 | Ramkrishna Bishnu ... | 16 | Second |
| | 223 | Susilendu Dasgupta (M) ... | 16 7 | First |
| | 224 | Madhusudan Mukhopadhyay (mMc) ... | 16-7 | First |
| | 225 | Upendrakumar Sen Gupta ... | 16-6 | First. |
| | *226 | Saralchandra Sirmani (MmMc) ... | 16 | First |
| | 229 | Phanindranath Basu ... | 16 | Second |
| | 231 | Santoshkumar Nagchaudhuri (V) ... | 16 | First |
| | 233 | Amiyakumar Sarkar ... | 17-7 | Second |
| | 234 | Jyotirananda Sengupta | 18-1 | Third. |
| | | **Panskura B. B. H. E. School.** | | |
| | 236 | Jishnupada Misra ... | 17-2 | First |
| | 237 | Bibhutibhusan Bhattacharyya (V) ... | 18 | First |
| | 238 | Santoshkumar Ray (Mm) ... | 17-2 | First |
| | | **Panskura B. B. H. E. School.** | | |
| Cal. | 240 | Pasupati Das ... | 16-8 | First |
| | 241 | Surendranath Das (m) | 17-8 | First |
| | 243 | Himansukumar Sabud | 16-4 | First |
| | | **Kumar Radhaprasad Institution.** | | |
| | 248 | Jnanendranath Basak (MVm) ... | 17-1 | First |
| | 249 | Jagadisprasad Bhakat (Mm) ... | 17-2 | First |
| | 251 | Kalipada Jati ... | 18-8 | Second |
| | 253 | Panchanan Chattopadhyay (Vm) ... | 17-2 | First |
| | 254 | Jibankrishna Majumdar (m) ... | 16-4 | First |
| | 255 | Krishnakamal Sengupta | 16-10 | First |
| | 258 | Kshetrachandra Ghosh (MVml) ... | 16 10 | First |
| | 259 | Prabodhchandra Ray ... | 17-1 | First |
| | 267 | Jagodishnarayan Verma | 19-1 | Second. |
| | | **Nabagram Hindu Academy.** | | |
| | 269 | Charuchandra Basu . | 20 2 | Third. |
| | 271 | Bipinbihari Manji ... | 22-3 | First |
| | 272 | Pulinbihari Sarkar ... | 19-8 | Second |
| | | **Bagati H. E. School.** | | |
| | 273 | Bishnupada Shi ... | 20-11 | Second |
| | 274 | Dhirendranath Bandyopadhyay . | 16 11 | First |
| | 276 | Bijalikumar Mukhopadhyay ... | 18 8 | Second |
| | 277 | Pramathanath Mitra ... | 22 3 | First |
| | | **Rajibpur A. V. High School.** | | |
| | 278 | Kanailal Pal ... | 18 | First |
| | 279 | Krishnachandra Ghosh (m) ... ... | 18-3 | First |
| | 280 | Manomohan Ghosh (Mm) .. ... | 17-7 | First |
| | 281 | Azizar Rahaman Mondal ... | 17-11 | Second |
| | 282 | Bibhutibhushan De ... | 17-4 | Second |
| | | **Shashati Nahala Abinas H. E. School.** | | |
| | 284 | Surendrakumar Das ... | 19-5 | First |
| | 286 | Nutbihari Pramanik ... | 18 11 | Second |
| | 288 | Kalisadhan Sarkar ... | 18-4 | Second |
| | 289 | Pulinbihari Maji ... | 21-9 | Second |
| | 290 | Manmathanath Manna | 17-10 | First |
| | 292 | Prankrishna Adak m) | 17 11 | First |
| | 293 | Pasupati Sen ... | 18-8 | Third |
| | 298 | Sitalchandra Samanta (Mm) ... ... | 17-5 | First |
| | 299 | Baidyanath Sarkar .. | 21-5 | Second |
| | 303 | Anadicharan Jana ... | 24-2 | First |
| | | **Calcutta Training Academy.** | | |
| | *304 | Prabhaschandra Sen gupta (Ml) | 16-3 | First. |
| | *305 | Lalitmohan Sengupta (Lml) ... | 16 | First |
| | 306 | Sudhindranath Basu (MLVm) ... | 16-10 | First |
| | 307 | Bhupendrakumar Bandyopadhyay (L) | 20-3 | First |
| | 308 | Susendramohan Sen . | 16-1 | First |
| | 309 | Matilal Sen ... | 17-1 | First |
| | 310 | Thakurdas Ray (Vm)... | 16-6 | First. |
| | 311 | Purnachandra Goswami | 16-1 | First |
| | 312 | Dhanapati Datta ... | 17 1 | First. |
| | 314 | Niranjay Bandyopadhyay ... | 17-1 | Second |

| Roll. | No. | Name | Age. | Division in which the candidate has passed |
|---|---|---|---|---|
| | | **Calcutta Training Academy.** | | |
| Cal. | 316 | Kusumkumar Gupta ... | 17-10 | First |
| | 317 | Pulinbihari Pattri ... | 17-3 | Second |
| | 318 | Manikchandra Datta ... | 16 11 | Second |
| | 319 | Prabhaschandra Ghosh | 16-5 | First |
| | 324 | Kamalakanta Mukhopadhyay ... | 16-6 | Third |
| | 325 | Rakhalhari Basu ... | 16-4 | Second |
| | 326 | Saurendranath Basu (MVm) ... | 16 4 | First. |
| | 327 | Gopalchandra Sanyal | 17 7 | Second |
| | 328 | Prasantakumar Sen (M) | 17-1 | First |
| | 334 | Tapendrakumar Chattopadhyay ... | 18 4 | Second |
| | 335 | Bholanath Mukhopadhyay ... | 16-7 | Second |
| | 342 | Jhabarmall Jalan ... | 20-11 | Second |
| | | **Dupleix College, Chandernagore.** | | |
| | 344 | Anilkumar Basu ... | 17-11 | First |
| | | **Jorasanko High School.** | | |
| | 347 | Kaliprasad Bandyopadhyay ... | 17-1 | Second |
| | 349 | Chandrakishorelal Dass (M) ... ... | 23-7 | First |
| | 350 | Joynandan Misra ... | 19 | Second |
| | 351 | Dharmendramohan Misra ... ... | 18-7 | Second |
| | 355 | Srikanta Misha ... | 18-1 | Second |
| | 356 | Sukeshwarprasad Dubay ... | 18 | Second |
| | 357 | Phulnarayan Prasad ... | 18-3 | Second |
| | 361 | Shivachandra Prosad Sinha ... | 17 | Second |
| | 362 | Lala Mathura Prosad Sinha. ... | 21-7 | Second |
| | 366 | Ram Lall ... | 19-8 | Second |
| | 367 | Jogendranaram Mishra | 18-1 | Third |
| | 370 | Jagdip Sahai Shrivastava ... | 20-4 | Third |
| | 375 | Satyadeo Roy ... | 18-8 | Third |
| | 380 | Ramadhar Singh ... | 18-1 | Second |
| | 381 | Gajanan Misra .. | 20-10 | Second |
| | 382 | Hirdyanand Singh ... | 20-7 | First |
| | 383 | Ramniranjan Prasad (H) ... ... | 21 3 | First |
| | 387 | Zulum Sinha ... | 19-3 | Second |
| | 392 | Gokulchand Kocher ... | 19-2 | Second |
| | 394 | Kameswari Prasad ... | 22-8 | Third |
| | 400 | Ramchandra Jha ... | 19 5 | Second. |
| | 401 | Janardon Jha ... | 17 2 | Third |
| | 402 | Bhagwati Prasad ... | 21-8 | Third |
| | 403 | Chandra Shakher Dixit | 16-11 | First |
| | 405 | Jagendra Prosad Sinha | 20-9 | First |
| | 406 | Syed Kasim Hussain ... | 20-11 | Third. |
| | 407 | Md Mahmood (VI) ... | 17-7 | First |
| | 410 | Rung Bahadur Singh ... | 19-11 | First |
| | 411 | Jageswar Prasad ... | 22-2 | Second |
| | 413 | Harinandan Prasad ... | 18-2 | Second |
| | 414 | Raj Bahadur Singh ... | 20-4 | Second |
| | 417 | Gonesh Prashad Bhagat ... | 20-10 | Second |
| | 418 | Saryu Prosad ... | 19-3 | First. |
| | 419 | Mahabir Prasad Sinha, I | 21-5 | First |
| | 420 | Manmohan Lal ... | 17-11 | First. |
| | 421 | Ahsan Ali Mirza ... | 18 2 | First. |
| | 422 | Gholam Hosain ... | 19-8 | Second. |
| | 424 | Karamat Ali (I) ... | 20-8 | First |
| | 425 | Qalandar Khan ... | 22-2 | First |
| | 427 | Rahmatullah Khan ... | 18-8 | Second. |
| | 428 | Md. Nasiruddin (V) ... | 18-8 | First. |
| | 429 | Murad Beg ... | 19-8 | Second. |

| Roll | No | Name | Age. | Division in which the candidate has passed |
|---|---|---|---|---|
| | | **Jorasanko High School.** | | |
| Cal. | 430 | Mirza Shakir Beg (VI) | 19 1 | First. |
| | 431 | Kaza Shariful Hasan (V) ... | 17-3 | Second |
| | 432 | Mohd Raza Karim (I) | 16-6 | First |
| | 434 | Syed Qem Hassan ... | 20-11 | Second. |
| | 435 | Md. Ahmuddin ... | 19-11 | Third. |
| | 436 | Syed Mohammad ... | 17-1 | Second. |
| | 437 | Seyed Israr Hussain Khan Tabatabai ... | 21-9 | Second. |
| | 439 | Abdus Samad Khan ... | 18-6 | Third. |
| | 440 | Kamarruzzaman Khan | 18-2 | First. |
| | 443 | Quazi Md. Abdullah (V) | 17-1 | First. |
| | 444 | Mohammed Aminullah | 23 6 | Second |
| | 445 | Mohammed Sulaiman ... | 17 2 | Second. |
| | 446 | Mohammed Ishfaque (V) | 17 | First. |
| | 447 | Bashirud Din (I) ... | 21-9 | Second. |
| | 448 | Syed Abdul Hakim ... | 16-5 | Third. |
| | 449 | Munib Uddin Ahmed ... | 19-8 | First |
| | 450 | Mohammed Abdul Hai | 17-6 | Second. |
| | 451 | Akhtar Alison . ... | 18-1 | First. |
| | 452 | Mohammad Zahur ... | 16 7 | Second. |
| | 453 | Bhooray Khan ... | 21-1 | Second. |
| | 454 | Mohamed Yusuf ... | 18-2 | Second. |
| | 456 | Fayezuddin (V) ... | 18-1 | First |
| | 457 | Altafur Rahim ... | 19-3 | Second |
| | 458 | Aziz Mohd Khan ... | 20-11 | First. |
| | 459 | Abdur Rahman (VI) ... | 29-2 | First. |
| | 461 | Syed Shamsul Islam (VI) ... ... | 16-6 | Second |
| | 462 | Abdul Razzaque ... | 19-7 | Second |
| | 464 | Shaikh Abdur Rahman (V) .. ... | 19-7 | First |
| | | **Mahestala H. E. School.** | | |
| | 467 | Surendranath Pal ... | 17-1 | First |
| | 468 | Lakshminarayan Das... | 19 8 | Second |
| | 469 | Purnendranath Bandyopadhyay (M) ... | 16-1 | First |
| | 471 | Anangamohan Mukhopadhyay ... | 16-10 | Second |
| | | **Kamarhati Sagore Dutt Free H. E. School.** | | |
| | 474 | Kalodhan Raychaudhuri ... | 18 4 | First |
| | 475 | Sachindranath Bandyopadhyay (MVm) ... | 16-8 | First |
| | 476 | Bimalacharan Bhattacharyya ... | 18-10 | First. |
| | 477 | Sheikh Fazlul Haque (Mm) ... | 16-5 | First. |
| | 478 | Basantakumar Ghosh (M) ... .. | 17-1 | First. |
| | 479 | Santoshkumar Basu (M) ... ... | 18-3 | First |
| | 480 | Mangobinda Chattopadhyay ... | 19-11 | First |
| | 481 | Debiprasad Ghosh ... | 17-10 | First |
| | | **Pirpur Jaynagar H. E. School.** | | |
| | 482 | Prangobinda Sarkar (Mm) ... | 16-9 | First |
| | 483 | Manohar Das ... | 20-1 | Second |
| | 484 | Manikial Patra ... | 19-1 | Second |
| | 485 | Jatindranath Haldar ... | 19-1 | First. |
| | 486 | Anilkumar Ghosh ... | 18-6 | Second |
| | 487 | Sunilkrishna Ray (MLI) | 16-9 | First. |
| | 488 | Syamapada Ghosh ... | 19 | First |
| | 489 | Arabinda Ghosh ... | 20-7 | Third. |

| Roll | No. | Name. | Age. | Division in which the candidate has passed. |
|---|---|---|---|---|
| | | **City College** | | |
| Cal. | 490 | K. Krishnamoorthy (Mm) ... | 16 5 | First. |
| | 491 | Kalipada Ghosh (m) ... | 19 | First |
| | 492 | S. Sethu Mathu (Mm) | 16 | First |
| | 493 | Nripendranath Raychaudhuri (Ll). ... | 17-1 | First |
| | 495 | Jnanendranath Dhar ... | 17-1 | First. |
| | 496 | Bijaykumar Mallik ... | 21-1 | Second. |
| | 497 | Mahammed Soleiman ... | 17-7 | First. |
| | *498 | Sabhbhai Diganivola Hatimbhai (Mm) ... | 17-2 | First |
| | 499 | Saduddin Haider ... | 17 9 | Second |
| | 500 | Mohiuddin Ahmad ... | 20-5 | Second |
| | 501 | S. Fariduddin Ahmed... | 16-1 | Second. |
| | 502 | Mohainbhai C. Deganiwala (l) ... | 16-10 | First. |
| | 503 | Bholanath Baral ... | 18-4 | First |
| | 504 | Bibhutibhushan Basu ... | 18-1 | Second. |
| | 506 | Purnendukumar Gangopadhyay (Mm) ... | 18 | First |
| | 507 | Rajendranath Ghosh ... | 16 10 | First |
| | 508 | Sibnarayan Ghosh ... | 18-1 | First |
| | 509 | Sudhirchandra Guhathakurta (Mm) | 17-1 | First |
| | 510 | Sudhirchandra Kar ... | 20-6 | Second |
| | 511 | Manikchandra Laha ... | 17-2 | First |
| | 512 | Abdul Jalil Mullick ... | 19 | Second |
| | 513 | Lalitkumar Ray ... | 20 1 | Second |
| | 514 | Satischandra Sarkar .. | 18-1 | First |
| | 515 | Shaikh Abdul Hamid ... | 22 | Second |
| | 516 | Santoshkumar Basu (M) | 16-6 | First |
| | 517 | Dulalchandra Das (Vm) | 17-2 | First |
| | 518 | Jyotiprasad Datta (Mm) | 16-1 | First |
| | *519 | Sunilkumar De (Mm H) | 16 | First |
| | 520 | Anathnath Gangopadhyay (Mm) | 17 | First |
| | 521 | Niradkanta Goswami | 17 | First |
| | 523 | Sudhirkumar Nag ... | 17 | Second |
| | 524 | Harischandra Chattopadhyay (Mm) ... | 17-11 | First. |
| | 525 | Sudhirkumar Basu (m) | 16-2 | First. |
| | 526 | Bijaykumar Chakrabarti (m) ... | 18-5 | First |
| | 527 | Kalyankumar Das ... | 17 | Second |
| | *528 | Dhirendranath Datta (ML Vm Mc) ... | 16 6 | First |
| | 529 | Dhireschandra Ghosh (Mm) | 19 | First |
| | 530 | Gunendranath Ghosh (Mm) ... | 16-5 | First |
| | 531 | Sachindakumar Chaudhuri ... | 17-4 | Second |
| | 532 | Gobindachandra Datta (M) ... | 18 | First. |
| | 533 | Kalyankumar Lahiri ... | 17-4 | Second |
| | | **Mitra Institution, Calcutta.** | | |
| | 535 | Bhupendrakumar Acharyyachaudhuri (Mm) .. ... | 19-6 | First. |
| | 537 | Girindrachandra Basu (M) ... | 17-3 | First. |
| | 538 | Manalchandra Basu ... | 17-3 | First. |
| | *539 | Nakari Chattopadhyay (ML ml). | 16-1 | First. |
| | 540 | Nanibhushan Chakrabarti | 16-1 | First. |
| | *541 | Sudhirkumar Chakrabarti (M L Vml) ... | 16-3 | First. |
| | 542 | Dhirendranath Dasarkar | 18-4 | First |
| | 543 | Saurendrakumar Ghosh (M) ... ... | 16-5 | First. |
| | 544 | Asutosh Ghoshal (m) ... | 17 5 | First |
| | 545 | Kamalakanta Mukhopadhyay (MLm) ... | 16-2 | First |
| Cal. | 546 | Durgadas Nag ... | 18-1 | First |
| | 547 | Gauripada Nandi (m)... | 18-1 | First |
| | 548 | Kshetramohan Nath (Lm) ... ... | 16-1 | First |
| | *549 | Sunilchandra Sarkar (L Vml) ... | 16-2 | First |
| | 550 | Anadinath Sen (Mm) ... | 16-1 | First |
| | 551 | Saradananda Sengupta (Mm) ... ... | 16-11 | First. |
| | *552 | Nandalal Sinha (M L Vml) ... ... | 16-6 | First. |
| | 553 | Pramodranjan Mitra (Mm) ... ... | 17-4 | First. |
| | 554 | Bankimchandra Mukhopadhyay (m) ... | 17-2 | First. |
| | 555 | Chandiprasad Pal (M) | 17-8 | Second. |
| | 556 | Birendrakumar Acharyya (MmMc) ... | 16-5 | First |
| | 557 | Kamalkumar Bagchi (m) ... ... | 17.5 | First |
| | 558 | Satyendranath Bhattacharyya ... | 18-7 | First |
| | *559 | Sachindranath Chakrabarti (M Lm Mc) ... | 16-1 | First |
| | 560 | Tuhinansu Dasgupta (Mm) ... ... | 16-1 | First. |
| | 561 | Abanimohan Ghosh (Mm) .. ... | 16-3 | First |
| | 562 | Susilkumar Ghosh (Mm) ... ... | 20-8 | First |
| | 563 | Prabodhkumar Guha (Mm Mc) ... | 16 1 | First |
| | *564 | Sunilkumar Ray (M Lm Mc) ... ... | 17 1 | First. |
| | 565 | Amarendranath Sen (Mm) .. ... | 16-5 | First |
| | 566 | Sobhanlal Bandyopadhyay (M L V) .. | 16-2 | First. |
| | 567 | Amiyakumar Basu ... | 16 10 | First. |
| | 568 | Bhupendrakumar Basu | 18-1 | Second |
| | 569 | Lokanath Ghosh ... | 18-7 | First. |
| | 570 | Hridayranjan Palit ... | 16-5 | First. |
| | 572 | Sailesnath Bandyopadhyay (l) ... | 16-1 | First |
| | 573 | Nirmalchandra Basu ... | 16-5 | First |
| | 574 | Bibhutibhushan Chattopadhyay ... | 18-11 | First. |
| | 575 | Sudhindranath Chakrabarti (MLl) ... | 16-2 | First. |
| | 576 | Sureskrishna Chaudhuri ... ... | 16-11 | Second |
| | 577 | Rathindramohan Dasgupta (M) ... | 17 | First. |
| | 578 | Nandalal Ghosh ... | 17-6 | First |
| | 579 | Pasupatinath Mukhopadhyay ... | 16-11 | First |
| | 580 | Birendrabhushan Chattopadhyay (m) ... | 18 8 | First |
| | | **Barahanagar Victoria H. E. School.** | | |
| | 581 | Ramnarayan Bandyopadhyay ... | 16-6 | First. |
| | 582 | Balaram Bandyopadhyay (m) ... | 18-2 | First. |
| | 583 | Sibakedar Datta ... | 22 | Second |
| | 585 | Bibhutibhushan De ... | 16 7 | First. |
| | 586 | Praphullachandra De... | 17-7 | Second. |
| | 587 | Jitendranath Mukhopadhyay ... | 17-3 | Second. |
| | 588 | Amarendranath Mukhopadhyay (m) ... | 16-5 | First. |
| | 589 | Subodhchandra Manna | 18 | First |
| | 590 | Haridas Mallik (m) ... | 17-1 | First. |
| | 591 | Kanailal Pal (m) ... | 16-4 | First |

| Roll. | No. | Name. | Age. | Division in which the candidate has passed. |
|---|---|---|---|---|
| | | **Barahanagar Victoria H. E. School.** | | |
| Cal. | *592 | Amarprasad Basu (MLm) ... | 18 | First. |
| | 593 | Balaichandra Maitra (Mm) ... ... | 18 2 | First |
| | *594 | Jagannath Dawn (MLVml) ... | 18-7 | First. |
| | 595 | Jyotischandra Sur (Mm) ... ... | 18-1 | First. |
| | 597 | Amiyabhushan Bandyopadhyay ... | 17-6 | Second. |
| | 598 | Satyanarayan Bandyopadhyay ... | 18 | Third |
| | 599 | Nalinbihari Bandyopadhyay ... | 16 | First. |
| | 600 | Amalkumar Chakrabarti ... ... | 16-2 | Second |
| | 601 | Chandibhushan Chakrabarti ... | 18-7 | First |
| | 601 | Manikial Latta ... | 16-9 | Second |
| | 605 | Jagatbandhu Chattopadhyay ... | 18-2 | First. |
| | 606 | Biweswar Pal ... | 17 | Second |
| | 607 | Anadikumar Sanyal ... | 18 | Second |
| | 608 | Sibnath Karmakar ... | 19 1 | Second |
| | 609 | Rasbihari Ghoshal ... | 16-8 | First |
| | 610 | Bijayratna Sengupta ... | 17-1 | First |
| | | **Barrapkpur Government School.** | | |
| | 611 | Prabhatbhanu Bandyopadhyay (MVm) ... | 16-6 | First |
| | 612 | Ramranjan Bandyopadhya (MLm) ... | 20-1 | First |
| | 613 | Aprakaschandra Bhattacharyya (m) ... | 16 | First |
| | 614 | Haridas Bhattacharyya (Mm) ... | 16-7 | First |
| | 615 | Panchugopal Bhattacharyya ... | 20 2 | First |
| | 616 | Bipradas Chaudhuri (Mm) ... | 18-1 | First |
| | 617 | Panchanan Karmakar | 18-11 | First |
| | 618 | Bimalkrishna Mukhopadhyay (Mm) ... | 18-2 | First |
| | 619 | Sailendranath Pal (m) | 18 | First |
| | 620 | Syed Amir Ali ... | 19 | First |
| | 621 | Sisirkumar Bandyopadhyay (m) ... | 17-1 | First |
| | 622 | Subalkumar Bandyopadhyay (m) ... | 18-6 | First |
| | 623 | Bimalendranath Mitra (Mm) ... | 16-3 | First. |
| | 624 | Manindranath Bandyopadhyay ... | 18-10 | Second |
| | 625 | Krishnananda Biswas | 20-11 | Second |
| | 626 | Kalipada Das ... | 18-7 | First |
| | 627 | Basantakumar Datta ... | 17-6 | Second |
| | | **Panihati Trannath H. E. School.** | | |
| | 629 | Gobardhan De (Mm) ... | 16-10 | First. |
| | 630 | Asutosh Sirimani (m) ... | 16 1 | First. |
| | 631 | Bhutnath Das (ML) ... | 17-11 | First |
| | 632 | Tarapada Bhattacharyya ... | 18-2 | First. |
| | | **Beral H. E. School.** | | |
| | 634 | Nareshdranath Ghosh ... | 16-8 | First |
| | 635 | Haridhan Nag ... | 20-9 | First. |
| | 636 | Surendranath Mukhopadhyay ... | 17-7 | First. |
| | | **St. Chrys-Getsemane High School.** | | |
| Cal. | 638 | Sharifulla Khan (V) ... | 19-3 | First. |
| | 639 | Bibhutibhushan Kundu | 18-9 | Second. |
| | 641 | Radhacharan Pal ... | 17-3 | First. |
| | 643 | Ignatius Absalom ... | 18 1 | First. |
| | 644 | A. R Lakshmanan ... | 18-1 | Second. |
| | 645 | K. S Sundaram ... | 16-6 | First. |
| | 646 | T. A Mathew ... | 20-11 | Second |
| | | **Narikeldanga George High School.** | | |
| | 650 | Anadikumar Basu ... | 18 6 | Second |
| | 651 | Susilkumar Basu (M) | 16 2 | First |
| | 652 | Kalidas Bhattacharyya | 16-11 | Second. |
| | 653 | Sankarprasad Bhattacharyya ... | 16 1 | First. |
| | 654 | Lukshmanchandra Biswas ... | 18-3 | Second |
| | 655 | Nirmalkumar Datta ... | 17-1 | Second. |
| | 656 | Girindranarayan Ghosh | 18-2 | Second. |
| | 658 | Santoshkumar Ghosh | 21-1 | Second |
| | 659 | Kishorilal Karmakar ... | 18-5 | Second. |
| | 660 | Sailendrakumar Mitra | 18-1 | First. |
| | 661 | Upendranath Naskar (m) ... ... | 17-1 | First |
| | 662 | Goshthabihari Poddar (ML ml) ... | 17-1 | First |
| | 663 | Sudhirkumar Ghosh ... | 19-4 | Third |
| | 664 | Harendrakrishna Rakshit ... | 17 1 | Second. |
| | 666 | Hirendranath Basu ... | 16 1 | Second |
| | 667 | Phanindranath Basu ... | 18-6 | Third |
| | 668 | Santoshkumar Basu ... | 19 4 | Second. |
| | 669 | Phakirdas Bhattacharyya ... | 17-11 | Third |
| | | **Calcutta Academy.** | | |
| | 670 | Bijaykrishna Basu ... | 18-8 | First |
| | 671 | Sudhirchandra Basu ... | 16-3 | Third. |
| | 674 | Ruchibrata Chattopadhya (m) ... | 19-1 | First |
| | 675 | Gobindachandra De ... | 16-1 | Second |
| | | **Town School Calcutta.** | | |
| | 680 | Bholanath Sengupta ... | 17 2 | Third. |
| | 682 | Bibhutibhushan Sen ... | 18-9 | Second. |
| | 685 | Susilkumar Bandyopadhyay, II ... | 16-10 | First |
| | 686 | Phanindranath Bhattacharyya ... | 16-11 | First |
| | 687 | Jatindranath Ghosh ... | 19-1 | Second. |
| | 688 | Ramanrupam Ghosh ... | 17-4 | First. |
| | 689 | Santoshkumar Bandyopadhyay (Mm) ... | 16-1 | First. |
| | 690 | Bishnupada Ghosh ... | 17-3 | Third |
| | *691 | Santoshkumar Mukhopadhyay (ML ml) ... | 17-7 | First. |
| | 692 | Anadinath Mukhopadhyay (Mm) ... | 18-2 | First. |
| | 693 | Amiyakumar Guha ... | 16-1 | First. |
| | 694 | Ganeschandra Sikdar (ML) ... ... | 16-7 | First. |
| | 695 | Nareindranath Ghoshal | 18-7 | First. |
| | 696 | Birendrakrishna Bhadra | 16-7 | Second. |
| | 697 | Dhirendranath Saha ... | 18-1 | First. |
| | 698 | Manindranath Bagchi, I | 16-6 | Second. |
| | *699 | Sibadas Set (Mm) ... | 16-1 | First. |
| | 700 | Upendranath Biswas ... | 20 | Second. |
| | 701 | Gopalal Ray ... | 18-8 | Second. |
| | 702 | Benimadhab Chakrabarti ... ... | 16-1 | First. |
| | 703 | Jaganath Sen (M) ... | 17-11 | First. |
| | 704 | Manindrakumar Bagchi, II (Mm) ... | 17-2 | First. |
| | *705 | Sailendranath Chakrabarti, II (LVm) ... | 17 | First. |

| Roll. | No. | Name. | Age. | Division in which the candidate has passed. |
|---|---|---|---|---|
| | | **Town School, Calcutta.** | | |
| Cal. | 706 | Radharaman Dhol ... | 16-1 | Second. |
| | 707 | Makhanlal Datta ... | 16-2 | Second |
| | 708 | Jaynarayan Mukhopadhyay ... | 18-10 | Second. |
| | 709 | Satishchandra Ghosh (Mm) ... ... | 17-6 | First |
| | 710 | Charuchandra Datta (m) ... ... | 17 11 | First |
| | 711 | Dhirendranath Datta .. | 18 7 | Second. |
| | 712 | Nilratan Datta ... | 17 10 | First |
| | 713 | Manabkumar Bhattacharyya ... | 19-3 | Third |
| | 714 | Manindrabhushan Chaudhuri (MmG) ... | 18-6 | First |
| | 715 | Dhirendranath Joardar (M) ... ... | 17-11 | First |
| | 717 | Krishnacharan Mitra (Mm) ... ... | 17-2 | First |
| | 718 | Krishnachandra Ghosh | 17 | First. |
| | 719 | Umaprasanna Dasgupta ... ... | 17 | Second |
| | 720 | Subodhchandra Mitra | 16 6 | First. |
| | 721 | Debeschandra Sanyal ... | 16-6 | Second |
| | 722 | Atindranath Ray ... | 17-2 | Second |
| | 723 | Radhikaraman Mitra ... | 17 | First |
| | 724 | Jagadindramohan Maitra (m) ... | 17-7 | First |
| | 725 | Jagannath Sil (Mm) ... | 16 1 | First |
| | 726 | Rakaldas Chakrabarti (m) ... ... | 17-7 | First |
| | *727 | Jagannath N Welingkar (MLmMc) ... | 16 7 | First |
| | 729 | Niradbaran Bandyopadhyay ... | 16 1 | First. |
| | 730 | Manindranath Chattopadhyay ... | 17 | Second |
| | 731 | Sailendranath Chakrabarti, l ... | 17 | Second |
| | 732 | Haripada Sikdar .. | 16-3 | Second |
| | 733 | Sobhendranath Ghosh (M) ... ... | 16-2 | First. |
| | 734 | Girijaprasana Bandyopadhyay ... | 20-11 | Second |
| | 736 | Abhaypada Bagchi ... | 17-7 | Second |
| | 737 | Taraknath Bagchi ... | 18-4 | Second |
| | 738 | Sailendranath Mitra ... | 17-6 | First |
| | 739 | Gopalchandra Biswas | 17-4 | Second |
| | 740 | Ajitkumar Sinha ... | 16-1 | First |
| | 742 | Khadyotkumar Bandyopadhyay ... | 17 | First |
| | 743 | Dharmadas Srimani ... | 19-7 | Second |
| | 746 | Satyendranath Niyogi | 16-7 | Second. |
| | | **Saraswat Kshatriya Vidyalaya.** | | |
| | 747 | Maheswarayan Rai ... | 17-1 | First |
| | 749 | Bishnudas Mehra (m) | 17-5 | First |
| | 750 | Purnachandra Burman | 17-1 | First |
| | 751 | Rajeswariprasad Sinha | 16-6 | First |
| | 752 | Chaturbhuj Mishra ... | 17-1 | First |
| | 753 | Nandkishor Pandeya | 18-4 | First |
| | 754 | Rajballabh Sinha ... | 19 | Second. |
| | | **Metropolitan Institution, Sara Bazar Branch.** | | |
| | 758 | Rajendrakumar De ... | 18-3 | Second. |
| | 762 | Nabadwipchandra Sil | 17-1 | Second |
| | 766 | Suryyakumar Mukhopadhyay ... | 16-2 | Second |
| | 767 | Prakaschandra Basak | 18-1 | Second. |
| | 769 | Anadinath Gain ... | 16 3 | Second. |
| | 770 | Sitalchandra Basu (Mm) | 16-4 | First. |
| | 771 | Nirmalchandra Nayak | 17-2 | Second. |
| | 772 | Ghyachand Sriman (m) | 18-1 | First. |
| | 773 | Kalikinkar Bandopadhyay (ML ml) ... | 17-11 | First. |
| | 774 | Saurendramohan Sinha (Mm) ... | 16-2 | First. |
| | *775 | Narendranath Sarkar (ML ml) ... | 18-1 | First. |

| Roll. | No. | Name. | Age. | Division in which the candidate has passed. |
|---|---|---|---|---|
| | | **City College School.** | | |
| Cal. | 776 | Debkumar Chakrabarti | 17-8 | First |
| | | **Garia Saradaprasad High School.** | | |
| | 777 | Kartikchandra Das ... | 18-3 | Second |
| | 778 | Sasadhar Bhattacharyya ... | 19-2 | Third. |
| | 779 | Susilchandra Chattopadhyay ... | 18-1 | Second |
| | 782 | Bhudebchandra Mukhopadhyay ... | 17-2 | Second |
| | 783 | Sudhirkumar Ghosh ... | 18-8 | Second |
| | | **Central Collegiate School.** | | |
| | 784 | Bhujangabhushan Bandyopadhyay ... | 17-1 | Second |
| | 785 | Panchanan Basu ... | 19-2 | First. |
| | 786 | Sukumar Sengupta (Mm) ... ... | 16-3 | First |
| | 789 | Jagabandhu Biswas (m) | 17-4 | First |
| | 790 | Kalipada Sarkar ... | 17 | First |
| | 791 | Phanindranath Mitra (Lml) ... ... | 16 3 | First |
| | *792 | Paritosh Sarkar (MLml) ... | 16 | First |
| | 793 | Dhirendranath Dasgupta ... ... | 16-5 | Second |
| | 794 | Manindramohan Pal (m) ... ... | 18-1 | First |
| | 795 | Anilkumar Bhattacharyya .. | 16 7 | First |
| | 796 | Digendrakrishna Pal (Mm) ... ... | 17-5 | First. |
| | 797 | Phanindranath Hajra (m) ... ... | 16-2 | First |
| | 798 | Sailendraprasad Basu ... | 16-1 | First. |
| | 801 | Nirmalkumar De ... | 18-1 | Third. |
| | 802 | Anukulchandra Mukhopadhyay (Mm) ... | 18 5 | First. |
| | 806 | Atulchandra De ... | 16-10 | Second. |
| | 807 | Satinath Mitra ... | 18-1 | Second |
| | 808 | Bibhutibhushan Basu | 17-1 | First |
| | 811 | Hrishikes Bhattacharyya ... | 21 | Third |
| | 812 | Birendrakrishna Bandyopadhyay ... | 21-9 | Third |
| | 813 | Pankajkumar Ray ... | 16-2 | First |
| | 816 | Kalicharan Mitra ... | 17-1 | Third |
| | 820 | Dasarathi Ghoshal ... | 18-1 | Third |
| | | **South Goria Sompas Institution.** | | |
| | 821 | Girijabhushan Bandyopadhyay ... | 18 6 | First |
| | 822 | Durgadas Bandyopadhyay (m) ... | 23-6 | First |
| | 823 | Girijabhushan Chattopadhyay (Mm) ... | 16-3 | First |
| | 824 | Surathchandra Mandal | 19-4 | Second |
| | 825 | Kshirodkumar Mandal | 16-10 | First |
| | | **Ripon Collegiate School, Calcutta.** | | |
| | 827 | Bireswarprasad Sen ... | 16 8 | Second. |
| | 829 | Mahammed Mowla Bokesh ... | 17 4 | First |
| | 830 | Kazi Abdul Ali ... | 16-2 | Second. |
| | *831 | Haripada Biswas (MLml) .. | 17-5 | First. |
| | 832 | Mihirprakas Chattopadhyay (MLml) ... | 16 | First. |
| | 834 | Jatiswar Bandyopadhyay ... | 16-5 | First. |
| | 835 | Rabindranath Sinha ... | 16-2 | First. |
| | 837 | Ratnendranarayan Sinha (Mm) ... ... | 16-1 | First. |

| Roll. | No. | Name. | Age. | Division in which the candidate has passed. |
|---|---|---|---|---|
| | | **Ripon Collegiate School, Calcutta.** | | |
| Cal. | 838 | Bipinbihari Chail (m) | 17-1 | First. |
| | 839 | Sachindranath Ray ... | 18-11 | First. |
| | 840 | Prabhatkumar Dasghosh ... ... | 18 3 | First |
| | 841 | Sitalaprasad Datta (m) | *17 4 | First |
| | 842 | Phanindramohan Datta | 16 | First |
| | 843 | Sadhanchandra Ghoshal | 18 10 | First |
| | 845 | Manimohan Gangopadhyay ... | 16-10 | First |
| | 846 | Satchidananda Ghosh | 16-3 | Third |
| | 847 | Sudhirchandra Ray (m) | 16-3 | First |
| | 848 | Sudhansukumar Sen ... | 20-11 | Second |
| | 851 | Asimananda Ray ... | 16 5 | Second |
| | 853 | Syamapada Ghosh ... | 19-1 | Second |
| | 855 | Manindranath Basu ... | 18-4 | Second |
| | *857 | Dwijendrakumar Mukhopadhyay ... | 17 | First |
| | 858 | Daneschandra Pal ... | 19-1 | First |
| | 861 | Dhirendrakumar Chakraborti ... ... | 16-2 | First |
| | 862 | Srischandra Ghosh ... | 16 9 | Third |
| | 864 | Sunilkumar Gupta ... | 16-1 | Second |
| | 865 | Saileschandra Ray ... | 16 1 | First |
| | 868 | Sailendrakrishna Basu | 18-1 | First |
| | 870 | Abanranjan Palit ... | 17-7 | Second |
| | 871 | Pramathalal Sen ... | 18 6 | Third |
| | 873 | Prabhatnath Raychaudhuri ... ... | 17-2 | First |
| | 875 | Adhirchandra Das ... | 17-8 | Second |
| | 878 | Radhacharan Bandyopadhyay ... | 17-7 | Third |
| | 879 | Dhanaraj Mandal ... | 19-6 | Second |
| | 880 | Lakshminarayan Mukhopadhyay ... | 16-2 | Second |
| | 882 | Bibhutibhushan Niyogi | 16 5 | Second |
| | 884 | Bhupatimohan De ... | 21 | Second |
| | 886 | Saratkumar Bahadar | 21-7 | First |
| | 887 | Haribar Joshi .. | 18 11 | First |
| | 888 | Rajendranaran Sinha | 21-1 | First |
| | | **Uluberia H. E. School.** | | |
| | 889 | Subodhchandra Maiti (m) ... ... | 17-2 | First |
| | 890 | Rajendranath Bandyopadhyay (m) ... | 16 2 | First |
| | 891 | Subodhranjan Dasgupta (m) ... ... | 16 5 | First. |
| | 892 | Prankrishna Chandra ... | 17-2 | First |
| | 893 | Hariprasad Bandyopadhyay ... | 18-10 | Second |
| | 894 | Shaikh Wazedali ... | 19-8 | First |
| | 895 | Amulyachandra Mitra | 19-4 | First |
| | 896 | Md Abdur Rasid ... | 18 | Second |
| | 897 | Phanindranath Mitra ... | 16 3 | First |
| | 898 | Lalitmohan Mandal ... | 19-7 | Second |
| | 899 | Rajab Ali Mollah ... | 20 4 | First |
| | | **Hare School, Calcutta.** | | |
| | 900 | Nagendramohan Das ... | 17-6 | Second |
| | 901 | Gurudatta Misra (Mm) | 16-8 | First |
| | 902 | Mehta Nathmalal ... | 18 | Second |
| | 903 | Motilal Khaitan ... | 17 1 | Third |
| | 904 | Abhayanand Sinha (Mm) ... ... | 17 | First |
| | 905 | Devamani Acharya Dixit (m) ... | 16-5 | First. |
| | 906 | Pradyotkumar Guha (Mml) ... ... | 17-1 | First |
| | *907 | Karunasindhu Bandyopadhyay (MLml) ... | 17-3 | First |
| | 908 | Manomohan Bhattacharyya (m) ... | 17-9 | First |
| | 909 | Ajitkumar Basu (M) ... | 17-2 | First |
| | 910 | Amiyaranjan Bawes (MLm) ... ... | 16-1 | First |
| Cal. | 911 | Debabrata Chattopadhyay (MLml) ... | 16-1 | First. |
| | 912 | Mohitkumar Chattopadhyay (Mm) ... | 17-1 | First. |
| | 913 | Lalitmohan Das ... | 16 | First |
| | 914 | Khagendranath Datta | 16-4 | Third |
| | 915 | Rabindranath Datta (m) ... ... | 16-5 | First |
| | 916 | Baluram Gangopadhyay (m) ... | 16-10 | First |
| | 917 | Madanchandra Ghosh | 16-8 | First. |
| | 918 | Jogendrachandra Gupta | 17-6 | Second. |
| | *919 | Tarapada Kanjilal (Mml) ... ... | 16 | First |
| | *920 | Satischandra Laha (MLml) ... | 18-9 | First |
| | 922 | Abhiram Mallik (m) ... | 16-7 | First |
| | *923 | Nityaniranjan Ray (MLml) ... | 17 9 | First. |
| | 924 | Ajitkumar Raychaudhuri (M) ... | 16 1 | First |
| | 925 | Basudeb Sarkar (Mm) | 16 2 | First |
| | *926 | Siddhanath Sen (Mlml) | 17-4 | First |
| | *927 | Prabodhendranath Tagore (MLml) ... | 16-2 | First |
| | 928 | Sakumar Basu (Mm) ... | 17-2 | First |
| | 929 | Sudhansuprakas Chaudhuri (m) ... | 16 2 | First |
| | 930 | Amritakumar De (m) .. | 18-2 | First |
| | 931 | Bamnath Ghosh ... | 18-5 | First |
| | 932 | Subodhchandra Mitra (m) ... ... | 16-4 | First |
| | 933 | Hitendramohan Mukhopadhyay ... | 16-1 | Third |
| | 934 | Tarakdas Mukhopadhyay .. | 17-8 | Second |
| | 935 | Asok Ray (m) ... | 16-6 | First |
| | 936 | Gopeswar Sen (Mm) ... | 17-1 | First |
| | 937 | Birendrakumar Set (m) | 16-10 | Second |
| | 939 | Indrajitkumar Bandyopadhyyay (m) ... | 16-2 | First. |
| | 940 | Hemchandra Bhattacharyya (Mm Mc) ... | 16-1 | First |
| | 941 | Kanailal Basu (Mm) ... | 17-11 | First |
| | 942 | Suhritnath Chattopadhyay ... | 18-1 | Second |
| | 943 | Suryanath Chattopadhyay (m) ... | 16-2 | First |
| | 944 | Sunilchandra Dasgupta | 16 | Second. |
| | *945 | Jagattaran Dhar (MLm Mc) ... ... | 16-2 | First |
| | 946 | Anilkumar Ghosh (Mm Mc) ... | 16 | First |
| | 947 | Sudhindramohan Ghosh (M) .. ... | 17 | First. |
| | 948 | Satyanarayanprasad Gupta (Mm) ... | 17 | First |
| | 949 | Kripasaran Haldar (m) | 17-1 | First |
| | 950 | Bimalkumar Majumdar | 17-5 | First. |
| | 951 | Pratulchandra Mitra (Mm) ... ... | 16 | First. |
| | 952 | Durgacharan Mukhopadhyay ... | 16-2 | Second. |
| | 953 | Joytibhushan Mukhopadhyay (M) ... | 16 | First. |
| | *954 | Sailendranath Mukhopadhyay (MLm Mc) | 16-3 | First. |
| | 955 | Sarjokumar Mukhopadhyay (m) ... | 18 2 | First. |
| | 956 | Jibandhan Pal (M) ... | 18 | First. |
| | 957 | Nrisinhaprasad Ray ... | 17 | First. |
| | *958 | Prabhatranja Ray (Mm Mc) ... | 16-9 | First. |
| | 959 | Ranajit Ray ... | 16-1 | First. |
| | *961 | Asokkumar Sarkara (MLm Mc) .. | 16-9 | First. |

| Roll. | No. | Name. | Age. | Division in which the candidates has passed. |
|---|---|---|---|---|
| | | **Hare School, Calcutta.** | | |
| Cal. | 962 | Jitendranath Sil ... | 18-4 | Second |
| | 963 | Bhubaneswar Sen (Mm) | 18 | First. |
| | 964 | Kesabchandra Sen ... | 16 9 | First |
| | 965 | Jyotirmay Sinha ... | 16-2 | First |
| | 966 | Sarojendu Ghosh (M) .. | 16-8 | First |
| | 968 | Niradkumar Ray ... | 16 5 | First |
| | 969 | Prasunkumar Sen ... | 17 | Second |
| | 970 | Prabhaschandra Basu | 17-11 | First |
| | 971 | Kalachand Chandra ... | 16-7 | First |
| | 972 | Susilkumar Mundul ... | 17 11 | Second. |
| | 973 | Prabodhchandra Bandyopadhyay ... | 16 9 | First. |
| | 974 | Obaidul Huq . | 16 | First |
| | 976 | M Akhtarul Huque .. | 16-9 | Third |
| | 979 | Narayan Das ... | 20-4 | Second |
| | 980 | Mohammad ... | 18-5 | Second |
| | 981 | Niranjan Lall .. | 21-7 | Second |
| | 982 | Md Eshaque Ilias .. | 16-1 | Second |
| | 983 | Dharam Rai .. | 18-10 | Second |
| | | **Bishop's College School.** | | |
| | 985 | Ranendramohan Sengupta (M) ... | 16-7 | First |
| | 987 | Bijaukumar Ghosh (M) | 16-1 | First |
| | 988 | Narayanchandra Pande | 17-2 | Second |
| | 989 | Rajbchandra Chaudhuri (MinG) .. | 16-4 | First |
| | 990 | Anilkumar Mukhopadhyay .. | 16 | Second |
| | 991 | Asiruddin Ahmed | 20-5 | Second. |
| | 992 | Jyotischandra Sengupta (M) | 16 5 | First |
| | 993 | Chandicharan Sen (I) . | 21 4 | First |
| | 994 | Phanindranath Chattopadhyay .. | 16 9 | Second |
| | 995 | Soshie Roy Singh ... | 16-2 | First |
| | 997 | Tarunkumar Dhar . | 16-6 | First |
| | | **Chetla Boys School.** | | |
| | 998 | Saved Hafizuddin Ahamed ... | 16-1 | First |
| | 999 | Kazi Mozammul Hossain (L) ... | 18-1 | First |
| | 1000 | Syed Abu Nasar Md Nasiruddin .. | 16-2 | First |
| | 1002 | Bimanbihari Adhya .. | 16-4 | First |
| | 1003 | Kiranchandra Bhaumik | 19-4 | Second |
| | 1004 | Saileendranath Basu .. | 17 11 | Second |
| | 1005 | Sudhansubhushan Basu (I) ... ... | 16-10 | First |
| | 1006 | Bhupendralal Bhattacharyya ... | 19-1 | Second |
| | 1007 | Khagendranath Chakrabarti ... ... | 18 2 | Second. |
| | 1008 | Nirapada Datta .. | 16-10 | First |
| | 1009 | Syamsundar Das ... | 18 | Second |
| | 1011 | Haricharan Ghosh (MI) | 16-3 | First |
| | 1012 | Prabhatkumar Ghatak | 20-6 | Second |
| | 1013 | Nisikanta Gop (M) ... | 18-7 | First |
| | 1016 | Sarojkanta Mandal ... | 16 10 | First. |
| | 1017 | Sukumar Mukhopadhyay (M) ... | 17-9 | First |
| | 1019 | Lalmohan Mukhopadhyay ... | 16-1 | Third |
| | *1020 | Nisikanta Patra (MVI) | 19-5 | First |
| | 1021 | Nandakumar Rakshit .. | 17-2 | First. |
| | 1022 | Dwijendranath Raychaudhuri (MI) ... | 17-8 | First |
| | 1023 | Atalbihari Sardar ... | 19-7 | First |
| | 1024 | Brajendranath Adhya | 18-1 | Third. |
| | 1025 | Chittaranjan Basu ... | 19-8 | Second. |
| | 1026 | Bhupendranath Adhya (M) ... ... | 16-4 | First |
| | 1027 | Praphullakumar Adhya (Mm) ... ... | 16-5 | First. |
| | 1028 | Sudhirkumar Basu ... | 17-2 | First |
| | 1029 | Nanigopal Bandyopadhya ... ... | 18 | Second. |

| Roll. | No. | Name | Age. | Division in which the candidates has passed. |
|---|---|---|---|---|
| | | **Chetla Boys School.** | | |
| Cal. | 1030 | Rabindranath Chaudhuri ... ... | 19 | Second. |
| | 1031 | Jugalkisor Ghosh ... | 19 6 | Second. |
| | 1032 | Bimalkrishna Pal (Mm) | 16-10 | First |
| | 1033 | Pulinbihari Sinha .. | 16-3 | First |
| | *1034 | Dakshinaranjan Mukhopadhyay (MLm Mc) | 16 11 | First |
| | 1035 | Lalitmohan Datta (M) | 16-10 | First |
| | 1036 | Murarimohan Mukhopadhyay ... | 16-9 | Second |
| | 1037 | Jibankrishna Bhattacharyya .. | 20 | Third |
| | 1038 | Kanailal Basuchaudhuri | 21 | Second |
| | 1041 | Birendranath Mitra .. | 16-11 | Second |
| | 1042 | Kalipada Raychaudhuri | 18 4 | Third |
| | | **Mitra Institution, Bhowanipur.** | | |
| | *1043 | Pratapaditya Basu (MLml) ... | 16-10 | First |
| | 1044 | Dhirajkumar Bhattacharyya (M) ... | 16-1 | First |
| | 1045 | Manindranath Chakrabarti (LVI) | 16-11 | First |
| | *1046 | Sukumar Chattopadhyay (Mml) ... | 17 10 | First |
| | 1047 | Sudhansukumar Ghosh | 16 1 | First. |
| | 1048 | Hirendrachandra Ghosh | 16 5 | First |
| | 1049 | Amiyakumar Ghosh ... | 16-3 | First |
| | 1050 | Hiranmay Ghosh (m) | 16 | First |
| | 1051 | Dhirendrakumar Mitra (MI) ... ... | 18 4 | First |
| | 1052 | Nripendranath Mitra (M) | 16 | First |
| | *1053 | Bamaprasad Mukhopadhyay (MLVml) .. | 16-9 | First |
| | 1054 | Dakshinaprasanna Ray (Mm) .. ... | 16 2 | First |
| | 1055 | Phudebchandra Raychaudhuri (m) .. | 19 4 | First |
| | *1056 | Nirmalchandra Sen (MLVml) .. | 16-1 | First. |
| | 1057 | Praphullakumar Sen (M) .. ... | 16 4 | First. |
| | *1058 | Kshitindrakumar Sen (Mml) ... ... | 16 | First |
| | 1059 | Manmohan Bandyopadhyay (M) .. | 16-4 | First. |
| | 1060 | Rabindranath Bhadra (M) ... ... | 16 8 | First |
| | 1061 | Pradyotkumar Basu (Mm) ... ... | 16 3 | First. |
| | *1062 | Kalyankumar Basu (LVinH) ... | 16 8 | First |
| | 1063 | Gopalkrishna Basu .. | 16 | First |
| | 1064 | Muraridhan Chakrabarti (Mm) .. ... | 16-10 | First |
| | 1065 | Radhakanta Das ... | 17-2 | First. |
| | 1066 | Dipendranath Gupta (MinH) ... | 16-1 | First. |
| | 1067 | Puskarakshaprasad Mitra (Mm) ... | 17-10 | First |
| | 1068 | Bholanath Mitra ... | 16 | First |
| | 1069 | Anilbihari Mukhopadhyay ... | 17 3 | First. |
| | 1070 | Manibhushan Mukhopadhyay ... ... | 17-7 | First |
| | 1071 | Basantakumar Mukhopadhyay (Mm) ... | 16 | First |
| | 1072 | Satikanta Bandopadhyay (M) ... | 16-11 | First |
| | 1073 | Kalaranjan Basu (m) ... | 17 | First |
| | 1074 | Birendrakumar Kar .. | 16 | Second |
| | 1075 | Kalidas Bandopadhyay | 16-11 | First |
| | 1076 | Tinkari Bandyopadhyay | 19-8 | First |
| | 1077 | Kalyankumar Datta ... | 17-1 | Second |
| | 1079 | Sibapada Mukhopadhyay (VI) ... | 16 4 | First |
| | 1080 | Bimalkumar Mukhopadhyay ... | 19-3 | Second. |

| Roll | No. | Name. | Age | Division in which the candidates has passed. |
|---|---|---|---|---|
| | | **Mitra Institution, Bhowanipur.** | | |
| Cal. | 1081 | Tarapada Mukhopadhyay (M) ... | 16-1 | First |
| | 1083 | Prasantakumar Sen .. | 16 3 | First |
| | 1084 | Bibhutibhushan Bandyopadhyay (I) ... | 16 | First |
| | 1085 | Krishnachandra Ghosh (G) ... ... | 17-9 | First |
| | 1086 | Jagadindranath Maitra | 18-3 | Second |
| | 1087 | Kamjit Mukhopadhyay | 16-1 | Second |
| | 1088 | Fazlur Rahim ... | 19-11 | Third |
| | 1089 | Nirmalkumar Basu .. | 16 | First |
| | | **Taltala High School.** | | |
| | 1090 | Sudhakrishna Bag ... | 19-8 | Third |
| | *1093 | Bankimchandra Datta (MLml) ... | 16-1 | First |
| | 1094 | Bamamali Datta ... | 18-4 | First |
| | 1095 | Ajitkumar Datta .. | 17-11 | Third |
| | *1096 | Khagendrachandra De (MLml) ... | 18-2 | First |
| | 1097 | Sisirkumar Daw ... | 19-2 | Third |
| | 1098 | Bipinbihari Ghosh (m) | 20-1 | First |
| | 1099 | Sudhirkanta Ghosh (M) ... ... | 16 | First |
| | 1100 | Rammohan Mandal | 17 4 | Third |
| | 1101 | Mir Zobed Ali | 20 5 | Third |
| | 1102 | Sudhansukumar Ray (I) ... ... | 18 1 | First |
| | 1103 | Anilkumar Sarkar (M) | 18-5 | First |
| | 1104 | Birendranath Baral . | 20 10 | Third |
| | 1105 | Birendrachandra Mitra | 20-8 | Second |
| | 1106 | Jnanendranarayan Pal | 17 6 | Second |
| | 1107 | Badrinarayan Bandyopadhyay ... | 19-5 | Third |
| | 1108 | Nripendrakumar De .. | 21-3 | First |
| | 1109 | Kalimohan Mukhopadhyay ... | 16-4 | Second |
| | 1110 | Sudhirchandra Ray ... | 16 | First |
| | 1112 | Kalipada Bandyopadhyay ... | 16 4 | Second |
| | 1114 | Purnachandra Deb ... | 16 7 | Second |
| | 1115 | Sudhirchandra Datta, I | 16-1 | Second |
| | 1116 | Prahladchandra Mallik | 17 | Third |
| | 1117 | Jyotibrata Mukhopadhyay ... | 17 4 | Second |
| | 1118 | Upendrachandra Sen ... | 21 3 | First |
| | 1122 | Lakshmi Prasad ... | 17-3 | Third |
| | 1123 | Rajkishore Mahto (Mm) ... | 20 5 | First |
| | 1128 | Anirudhaprashed Sinha | 21-5 | Second |
| | 1129 | Awadheshkumar Sinha (M) ... ... | 18-2 | First |
| | 1130 | Nagwanti Prasad (Mm) ... | 19-3 | First |
| | 1132 | Bhagirathparsad Sinha | 18 6 | Third. |
| | 1135 | Jagdishnaram Sinha ... | 16-6 | Third |
| | 1141 | Sheobaran Tewari ... | 18-5 | Second. |
| | 1144 | Ramavatar Lall ... | 17 | Second |
| | 1145 | Sree Narayan ... | 17-3 | Third |
| | 1146 | Azizar Rahman ... | 18 | Second |
| | 1147 | Varughese Abraham ... | 17-9 | Second |
| | 1149 | Shaikh Sajiruddin Ali ... | 18 2 | Second |
| | 1150 | Badrinarayan Misir .. | 24-7 | Second |
| | 1151 | Haribar Singh ... | 20 | First. |
| | 1155 | Mohd. Altaf Husain (V) | 16 11 | First. |
| | 1158 | Syed Mansurul Hasan | 18-4 | First. |
| | 1159 | Syed Md. Mansur Ullah | 19-1 | Second. |
| | 1160 | Syed Massom Raza ... | 17-8 | Second. |
| | 1161 | S Ahmad Hasan ... | 21-4 | First. |
| | 1162 | S Majtaba Nawab ... | 20-8 | First. |
| | 1163 | Rajindra Nath ... | 22-7 | Second |
| | 1164 | Ramnath Sinha ... | 20-2 | First |
| | 1165 | Tarnaprasad Varma ... | 17-7 | Second |
| | 1167 | Shivaprashad Singh ... | 19-7 | First. |
| | 1168 | Syad Shah Sharfuddin | 16-4 | First |
| | 1170 | Rammohan Sahay ... | 17-2 | Second. |
| | 1171 | Rajendronath Roy ... | 18-4 | Third. |
| | 1174 | Rai Krishna Prasad | 17-11 | Second. |

| Roll. | No. | Name. | Age. | Division in which the candidates has passed |
|---|---|---|---|---|
| | | **Taltala High School.** | | |
| Cal. | 1176 | Nurul Hoda ... | 18-2 | First. |
| | 1178 | Md Tamassul Khan ... | 22-1 | Second. |
| | 1179 | Md Zahur Ahsan ... | 17-4 | Third. |
| | 1180 | Md Sami Ullah ... | 16-2 | Second |
| | 1181 | Md Mahfoozul Huque | 19-1 | Second |
| | 1182 | Jahangir Ali ... | 22-3 | First |
| | 1183 | Jageshwer Prasad, II | 16-8 | Third |
| | 1186 | Brijnandan Prasad ... | 20-10 | Second. |
| | 1187 | Bhagwat Sahay ... | 17-3 | Second. |
| | 1189 | Ali Imam ... | 20-1 | Second. |
| | 1190 | Abdul Huque Khan ... | 19-2 | Second. |
| | 1191 | Tassadduque (I)Hussain | 19-2 | First. |
| | 1192 | Sheonandan Lall .. | 17-1 | Second |
| | 1196 | Syed Nazibur Rahman | 19-3 | Second |
| | 1198 | Syed Md Ilyas . | 20-1 | Second. |
| | 1199 | Syed Mohiuddin ... | 18 | First |
| | 1201 | Syed Reyazul Hoque | 18-2 | Second |
| | 1202 | Syed Anwar Ali .. | 18-1 | Second. |
| | 1204 | Shahidul Haque Mullick ... | 18-2 | First |
| | 1206 | Syed Mahmoodali Khan ... | 16-2 | First |
| | 1207 | Syed Moneer Nawab .. | 17-2 | Second |
| | 1209 | Sayyed Ahsanuddin Ahmad ... | 17-3 | First |
| | 1214 | Md Shoab ... | 18-10 | Second. |
| | 1216 | Md Abdul Hakim ... | 17 8 | First |
| | 1217 | Mohd Umar (V) ... | 21-4 | First |
| | 1218 | Md Fazlur Rahman Khan . | 19-2 | First |
| | 1219 | Mohd Nasir Husain (V) | 18-3 | First |
| | 1221 | Md Zahiruddin ... | 20 7 | Second |
| | 1223 | M A Jabbar ... | 19-5 | Second |
| | 1225 | Muhammad Junaid ... | 19-11 | Second. |
| | 1226 | M A Zaman ... | 18 5 | Second |
| | 1229 | Md Ahsan ... | 19-2 | Third |
| | 1231 | Jwala Prasad . | 22-1 | First |
| | 1233 | Iqbal Singh .. | 17 9 | Third |
| | 1234 | Gholam Elias . | 18 | Second. |
| | 1235 | Baqar Nawab .. | 19 9 | Second |
| | 1237 | Abdul Hai, I .. | 22 10 | First |
| | 1238 | Abdul Karim .. | 17-4 | Second |
| | 1241 | Asghar Ali ... | 16-7 | Second |
| | 1242 | Abdul Hai, II ... | 17 3 | Second. |
| | 1243 | Altaf Hosain .. | 19-11 | Second. |
| | 1244 | Anwarul Hassan .. | 20-4 | Second |
| | 1245 | Abdur Rahman ... | 16-2 | Second |
| | 1246 | Amjad Ali ... | 17-8 | Second |
| | 1248 | Ahmad Hussain, II ... | 23 3 | Second |
| | 1249 | Abu Sulaiman Ahmad Khan ... ... | 16 2 | Second. |
| | 1250 | Gadadhar Prasad ... | 18-2 | Second. |
| | 1252 | Md Sharafat Hossain | 20-6 | First. |
| | 1253 | Md Abdul Alim ... | 17-2 | First. |
| | 1254 | Ramkumar Singh ... | 19-3 | First |
| | 1255 | Wali Hassain Khan ... | 18-8 | Third. |
| | 1256 | Baldeo Sahay Verma ... | 17-2 | Second. |
| | 1259 | Gholam Ashruf ... | 18-1 | Third |
| | 1260 | Syed Rahmat Hussain (V) ... ... | 17-8 | Second. |
| | | **Chakda Ramlal Academy.** | | |
| | 1261 | Satyacharan Sinharay (M) ... | 17-2 | First |
| | 1264 | Bijaymadhab Biswas (Mm) ... | 16-8 | First. |
| | 1265 | Rampada Chattopadhyay ... | 20-2 | First |
| | 1267 | Nandalal Ghosh ... | 19-2 | Third. |
| | 1270 | Gopalchandra Bandyopadhyay ... | 17-1 | Third. |
| | 1271 | Bholanath Seth ... | 21 2 | First. |
| | 1272 | Satyacharan Sadhukhan | 18-1 | Second. |
| | 1273 | Sudhansubhushan Ray | 18-2 | First. |
| | 1274 | Bijaykumar Bandyopadhyay ... | 17-1 | Second. |
| | 1275 | Tarapada Mukhopadhyay ... | 17-9 | Second. |

| Roll. | No. | Name. | Age. | Division in which the candidates has passed |
|---|---|---|---|---|
| | | **Chakda Ramlal Academy.** | | |
| Cal. | 1276 | Ramchandra Bhattacharyya ... | 19-1 | Third |
| | 1277 | Priyagopal Basu ... | 19-7 | Second |
| | 1278 | Maninderamohan Bhattacharyya ... | 17 1 | First |
| | 1279 | Bimalchandra Bhattacharyya ... | 17-1 | First |
| | | **South Suburban School, Bhawanipur.** | | |
| | *1280 | Kiranchandra Basak (M L Vm) . | 16 4 | First |
| | *1281 | Sudamgopal Mukhopadhyay (M Lm Mc) | 16 | First |
| | 1282 | Krishnachandra Sanyal (m) ... ... | 17-6 | First |
| | 1283 | Pabitrakumar Sengupta (Mm) ... ... | 16-1 | First |
| | *1284 | Jyotanakumar Raychaudhuri (Mm Mc) | 16-3 | First |
| | 1287 | Ramparayan Ray ... | 16 | First |
| | 1288 | Pradyotkumar Ghosh (m) ... .. | 16-7 | First |
| | 1289 | Sukumar Gangopadhyay (m) . | 17 11 | First |
| | 1290 | Susilchandra Bandyopadhyay (Mm) .. | 16 2 | First |
| | *1291 | Hiranmayekhar Das (MLml)... . | 16 11 | First |
| | *1292 | Haripada Bhattacharyya (Mml) . | 18-1 | First |
| | 1293 | Satyabijay Mitra (Mm) | 16-11 | First |
| | 1294 | Kalicharan Datta (Mm) | 19-10 | First |
| | 1295 | Bimalkumar Chaudhuri (Mm) ... | 16 | First |
| | 1296 | Jitendranath Mukhopadhyay (MVm) | 18 2 | First |
| | 1297 | Prabodhchandra Bandyopadhyay (Mm) . | 17-8 | First |
| | 1298 | Ajitkumar Basu | 16 8 | First |
| | 1299 | Jogindrakisor Mukhopadhyay (m) | 17-10 | First |
| | 1300 | Bhimchandra Pal | 16-7 | First |
| | 1301 | Sankarlal Bandyopadhyay (Mm) ... | 18 | First |
| | 1302 | Sudarsanchandra Ray (m) .. ... | 16-5 | Second |
| | 1303 | Surendranath Bhattacharyya (m) ... | 16 11 | First |
| | 1304 | Anilkrishna Mitra (m) | 17 | First |
| | 1305 | Dineschandra Bandyopadhyay (Vm) .. | 19 2 | First |
| | 1308 | Srikrishna Chattopadhyay ... | 17 2 | Second |
| | 1309 | Sasankabhushan Bhattacharyya (m) .. | 16-9 | First |
| | 1310 | Rabindranath Guha (Mm) ... ... | 17 | First |
| | 1311 | Matilal Chattopadhyay (m) ... ... | 18 8 | First |
| | 1312 | Dhirendranath Ray ... | 19 | First |
| | 1313 | Sibadas Sarkar (m) ... | 16-3 | Second |
| | 1314 | Nandabhushan Bandyopadhyay (m) .. | 16-8 | First |
| | 1315 | Nripendranath Sinha ... | 19 | Second. |
| | 1317 | Debendranath Bandyopadhyay (m) ... | 17-6 | First. |
| | 1318 | Narendrakumar Mitra (m) | 18-2 | First |
| | 1319 | Nandagopal Basu (m) | 17-10 | First |
| | 1320 | Sachindrachandra Chattopadhyay (m) ... | 16-8 | First |
| | 1321 | Praphullakumar Ghosh (m) ... ... | 16-1 | First. |
| | 1324 | Rabindranath Raychaudhuri, II (Mm) | 16-2 | First. |
| | 1325 | Subodhchandra Sarkar (m) ... ... | 19-10 | Second. |
| | 1326 | Kalikinkar Bhattacharyya (MVm) ... | 16-8 | First. |

| Roll | No. | Name | Age. | Division in which the candidates has passed. |
|---|---|---|---|---|
| | | **South Suburban School, Bhawanipur.** | | |
| Cal. | *1327 | Amiyakumar Bandyopadhyay (Mm) ... | 17 | First |
| | 1328 | Satyendranath Bhattacharyya (Mm) ... | 17-4 | First |
| | 1329 | Susilkumar Mukhopadhyay ... | 16 2 | First |
| | 1330 | Bindyanath De (m) ... | 16-9 | First |
| | 1332 | Dulalchandra Datta . | 19 3 | First |
| | 1333 | Manoranjan Bandyopadhyay ... | 16-7 | First |
| | 1337 | Syamakantha Ray ... | 18-5 | Third |
| | 1338 | Jagendranath Taraphdar ... ... | 18-10 | Second |
| | 1339 | Dhirendranath Mukhopadhyay .. | 17-11 | First |
| | 1340 | Rajkumar Mitra ... | 17-8 | First |
| | 1341 | Nagendranath Bhattacharyya ... | 18 3 | First |
| | 1343 | Bankimchandra Ghoshal ... .. | 19 4 | Second |
| | 1344 | Santoshkumar Raychaudhuri .. | 16 | Second |
| | 1345 | Dinabandhu Bandyopadhyay ... | 19-7 | Third |
| | 1346 | Birendramohan Bandyopadhyay .. | 17-3 | First |
| | 1347 | Susilchandra Chattopadhyay ... | 17-10 | First |
| | 1348 | Sailendranath Chattopadhyay (V) .. | 18 6 | Second |
| | 1349 | Asutosh Mukhopadhyay | 16-10 | Second |
| | 1350 | Hemantakumar Mukhopadhyay . | 17-1 | Second |
| | 1351 | Samarendranath Basu | 16-8 | First |
| | 1352 | Sudhirchandra Basak | 16 5 | First |
| | 1353 | Bhabataran Laha .. | 19 | Second |
| | 1354 | Sailendrakumar Mallik | 16-2 | First |
| | 1355 | Bibhutibhushan Gangopadhyay ... | 16 2 | First |
| | 1356 | Bijaykrishna Saha .. | 16 2 | First |
| | 1357 | Sureschandra Sinharay | 16 | Second |
| | 1358 | Ajitkumar Sen ... | 19-2 | Second |
| | 1362 | Sudhirkumar Mukhopadhyay ... | 16-4 | Second |
| | 1363 | Santikumar Datta ... | 17-4 | First |
| | 1365 | Kshetragopal Bandyopadhyay ... | 16-4 | Second |
| | 1368 | Umapada Basu ... | 19-5 | Second |
| | 1370 | Sarojendraprasad Bagchi ... | 17-1 | Second |
| | 1372 | Abanimohan Das (H) | 17-5 | First |
| | 1373 | Hirankumar Chattopadhyay ... | 17-11 | First |
| | 1374 | Ramnarayan Ray ... | 18 | First |
| | 1376 | Bishnu Dyal Chowdhary ... | 19-1 | Second |
| | 1377 | Gupteswar Singh ... | 17-9 | Second |
| | 1378 | Kashimuddin Saputi (m) | 19-2 | First |
| | | **Hindu School, Calcutta.** | | |
| | 1379 | Panchanan Bhattacharyya (V) ... | 16-11 | First |
| | 1380 | Prabaschandra De (m) | 16-1 | First |
| | 1381 | Balaknath Dhar (Mm) | 17-8 | First. |
| | 1382 | Kshitischandra Majumdar (m) ... | 16-10 | First |
| | 1383 | Pradyotkumar Mitra ... | 17-3 | First |
| | 1384 | Dwijendra Mustaphi ... | 16-10 | Second |
| | 1385 | Krishnasakha Sen (m) | 18 | First |
| | 1386 | Sailendranath Sen ... | 16-6 | First |
| | 1387 | Prabhatkusum Sanyal | 18-11 | First. |
| | 1388 | Lakshminarayan Mukhopadhyay ... | 19 | Second |
| | 1389 | Adinath Bhaduri (MG) | 16-1 | First |
| | 1390 | Kalikrishna Chakrabarti ... ... | 16-4 | First. |
| | 1391 | Keshbsankar Ray (Mm) | 16-6 | First. |

| Roll. | No. | | Age | Division in which the candidates has passed. |
|---|---|---|---|---|
| | | **Hindu school, Calcutta.** | | |
| Cal. | 1392 | Rameschandra Aich (m Mc) ... | 16-3 | First |
| | 1393 | Dulalchand Aich ... | 17 | First. |
| | 1394 | Pratulkumar Bandyopadhyay (Mm) ... | 16 2 | First |
| | 1395 | Tarakanta Bandyopadhyay (m) ... | 16-7 | First |
| | *1396 | Samarendranath Bandyopadhyay (Mm Mc) ... | 17 11 | First. |
| | *1397 | Dhirendranath Bandyopadhyay (Mm Mc) | 16-6 | First |
| | 1398 | Phanindranath Basu (Mm) ... | 17-2 | First |
| | *1399 | Gunabant Sing Bothra (Mm Mc) ... | 16 1 | First |
| | 1400 | Gautamnath Chattopadhyay ... | 17 6 | First |
| | 1401 | Ranadeb Chaudhuri (m) | 16 1 | First |
| | 1402 | Panchugopal Das (m) | 19-1 | First |
| | 1403 | Tejendranath Das (Mm Mc) ... | 16-8 | First |
| | 1405 | Panchanan Gangopadhyay (m) ... | 16 2 | First |
| | 1406 | Nirmalkanti Ghosh ... | 16 7 | First |
| | 1407 | Krishnalal Ghosh (Mm) | 17-5 | First |
| | 1408 | Bhupendranath Dasgupta . | 16 2 | First |
| | 1409 | Gopalchandra Gupta (m) ... ... | 16 1 | First |
| | 1410 | Bibhupada Kirti (m) . . | 16-1 | First. |
| | 1411 | Prabhatkumar Kundusaha ... ... | 17-5 | First |
| | *1412 | Dhirendranath Majumdar (M L m Mc) ... | 16-1 | First |
| | 1413 | Haradhan Mukhopadyay (m) ... | 17-3 | First |
| | 1414 | Gopendra Mallik (m) ... | 17-11 | First |
| | 1415 | Jagatbandhu Ray (Mm) . . | 17-2 | First |
| | 1416 | Amarbijay Ray ... | 16-1 | First |
| | 1417 | Rabindramohan Raychaudhuri (m) .. | 16-7 | First |
| | 1418 | Dhirendranath Sarkar (Mm) ... | 16 5 | First |
| | 1419 | Sumitchandra Sen (m) ... | 16 8 | First |
| | 1420 | Jitendranath Bandyopadhyay (H) .. | 16-10 | First |
| | 1421 | Ranajitkumar Bandyopadhyay (H) ... | 17-11 | First |
| | 1422 | Bireswar Bandyopadhyay ... | 19-6 | Third |
| | 1423 | Debendranath Basu .. | 17-11 | First. |
| | 1424 | Arunkumar Chattopadhyay ... | 17-2 | First |
| | 1425 | Jatindranath Datta ... | 17 | First |
| | 1426 | Panchkari Hajra ... | 16-8 | First |
| | 1427 | Atindrakumar Mitra (M) ... | 17-7 | First |
| | 1428 | Nirmalsankar Ray ... | 16-4 | First. |
| | 1429 | Byomkes Gupta ... | 18-10 | Second |
| | 1430 | Sachindranath Bandyopadhyay ... | 18-1 | First |
| | 1431 | Nisibhushan Ghosh ... | 16-2 | Second. |
| | 1432 | Pankajkumar Mukhopadhyay (H) ... | 17-1 | First |
| | 1433 | Arabinda Sen (G) ... | 17-4 | First |
| | | **Mahespur H. E. School.** | | |
| | 1435 | Khondakar Abdul Mannaf | 20.5 | First |
| | 1436 | Hajarilal Gangopadhyay | 17-11 | Second. |

| Roll. | No | | Age. | Division in which the candidates has passed. |
|---|---|---|---|---|
| | | **Janai Training School.** | | |
| Cal. | 1437 | Abanikumar Mukhopadhyay (Mm) .. | 17-4 | First |
| | 1438 | Parthanath Das (I) ... | 17-7 | First |
| | 1439 | Sudhirkrishna Malik (m) ... | 21-3 | Second |
| | 1440 | Jatindramohan Ghosh (L Ml) ... | 16-10 | First |
| | 1441 | Panchanan Mukhopadhyay (Mm) ... | 18-4 | First. |
| | 1442 | Kamalakanta Mukhopadhyay (m) ... | 17 | First |
| | 1443 | Balaichandra Datta (M Lm) ... | 18-2 | First. |
| | 1444 | Dhanapati Bandyopadhyay (m) .. | 18-4 | First |
| | 1445 | Bhadreswar Das (m) ... | 20-2 | First |
| | 1446 | Bijaykrishna Mukhopadhyay ... | 18-3 | Second |
| | 1447 | Santiram Kole ... | 18-6 | First |
| | 1448 | Haripada Bandyopadhyay ... | 18-2 | First. |
| | 1449 | Syamapada Mukhopadhyay ... | 19-11 | First |
| | 1450 | Jitendranath Chattopadhyay ... | 18 | First |
| | 1451 | Asutosh Ghosh ... | 18-1 | Second |
| | 1452 | Jitendranath Chakrabarti ... ... | 20 | First |
| | | **Dhankuria H. E. School.** | | |
| | 1453 | Abul Mansur Md Elahi Buksh ... | 16-2 | First |
| | 1454 | Sachidananda Das (m) | 18-7 | First |
| | 1455 | Jogesprasad Chattopadhyay (Lm) ... | 17-6 | First |
| | 1456 | Abhbhushan Pradhan ... | 18 7 | First |
| | 1457 | Kalipada Bandyopadhyay (m) ... | 17-1 | First |
| | 1459 | Gopinath Haldar (m) .. | 18-1 | First |
| | 1460 | Siddheswar Das ... | 20-7 | Second. |
| | 1461 | Md Abbaz Ali ... | 19-11 | First |
| | | **Gobindapur H. E. School.** | | |
| | 1465 | Rasbihari Mandal ... | 20-3 | Second. |
| | 1466 | Purnachandra Chattopadhyay ... | 16-11 | Second. |
| | 1468 | Santoshkumar Bandyopadhyay (M) ... | 18-2 | First |
| | 1469 | Khagendranath Chakrabarti ... ... | 16-8 | First. |
| | 1470 | Nalinimohan Mitra ... | 18 | Second |
| | 1472 | Santimay Basu (m) ... | 17-7 | First. |
| | 1473 | Sailendrakumar Chandra ... | 20-2 | Second. |
| | 1474 | Bikaschandra Bhattacharyya ... | 17-1 | First |
| | 1475 | Kiranchandra Bandyopadhyay ... | 18-9 | Second |
| | | **Sankrail Abhayacharan H. E.** | | |
| | 1477 | Matangicharan Ghosh | 18 11 | Second |
| | 1478 | Kesabchandra Sarkar | 20 | Second. |
| | 1479 | Harisatya Chattopadhyay ... | 16-6 | First. |
| | 1480 | Jibankrishna Mukhopadhyay ... | 19-5 | Second |
| | 1481 | Hemchandra Pramanik | 17-4 | First. |
| | 1482 | Prabodhchandra Pal ... | 19 | First. |
| | | **Atheneum Institution.** | | |
| | 1484 | Dharmaraj Sharma ... | 16-2 | Second. |
| | 1485 | Harendrakrishna Ghosh (m) ... | 17-1 | First |
| | 1486 | Durgapada Chakrabarti | 17-11 | First |
| | 1487 | Indumadhab De (m) ... | 16-2 | First. |
| | 1488 | Sambhucharan Bandyopadhyay ... | 18-2 | First. |

| Roll. | No. | Name. | Age | Division in which the candidate has passed. |
|---|---|---|---|---|
| | | **Athenaeum Institution.** | | |
| Cal. | 1489 | Gobindalal Chattopadhyay ... | 18-6 | Second |
| | 1490 | Nripendranath Biswas | 17-7 | Second |
| | 1491 | Sudhirkumar Ghosh ... | 18-6 | Second |
| | 1492 | Kanailal Mark ... | 17-1 | Third |
| | 1493 | Binaykrishna Mitra ... | 18 9 | Second |
| | 1494 | Kalicharan Rajbansi ... | 17-11 | Second |
| | 1495 | Sailendranath Kumar | 17 6 | Second |
| | 1497 | Nanigopal Bandyopadhyay ... | 16-3 | Second. |
| | 1498 | Praphullakumar Chaudhuri ... | 19 | Second |
| | 1499 | Lalmohan Mukhopadhyay ... | 16-7 | Second |
| | 1501 | Hariram Chandra ... | 17-2 | First |
| | 1502 | Nagendra Nath Dattaray ... ... | 16-3 | Second |
| | 1503 | Rajendrakumar Brahma | 18 1 | Second |
| | 1505 | Haranchandra Kumar | 16 9 | Second |
| | 1507 | Santoshkumar Basu (m) | 16-10 | First. |
| | | **Gabberia H.-E. School.** | | |
| | 1508 | Kusumbihari Teli ... | 17-10 | Second |
| | 1509 | Nahaniranjan Mandal (m) | 17-3 | First |
| | 1510 | Jatindranath Mandal (M) ... ... | 18 | First |
| | 1511 | Panchugopal Mandal ... | 17-8 | First |
| | 1512 | Mahimchandra Purkait | 18 9 | First |
| | 1513 | Jatindranath Mandal .. | 23 3 | Second |
| | 1514 | Chunilal Haldar (Mm) | 17 3 | First |
| | 1515 | Durgacharan Mandal (m) ... .. | 18 2 | First |
| | 1516 | Jaykrishna Purkait (m) | 17 3 | First |
| | 1517 | Jogendranath Das ... | 21-1 | Second |
| | | **Bow Bazar High School.** | | |
| | 1518 | Kaliprasanna Kumar (M Vm) ... | 16-2 | First |
| | 1519 | Gopeswar Pal ... | 17-1 | First |
| | 1520 | Hrishikes Bandyopadhyay (ml) .. | 16 8 | First |
| | 1521 | Ramendranath Mallik (m) ... ... | 16 | First |
| | 1522 | Biswanath Mallik (Mm) | 16-5 | First. |
| | 1523 | Sitendranath Raychaudhuri ... ... | 17 1 | First |
| | 1524 | Bhanuprakas Chattopadhyay (m) ... | 16-8 | First |
| | 1526 | Jagannath Datta ... | 20-5 | Second |
| | 1527 | Girindranath Adak . | 20 2 | Second |
| | 1529 | Paresnath Pramanik (m) ... .. | 16 9 | First |
| | 1530 | Taraknath Ray (Mm) | 16 1 | First |
| | 1533 | Krishnaprasad Datta | 18 | First |
| | 1534 | Banbihari De .. | 17-1 | Second |
| | 1535 | Sukumar Mitra ... | 17 5 | Second |
| | | **Brahmo Boys' School.** | | |
| | 1537 | Rajendrasingh Singhi | 18 10 | First |
| | | **Rani Bhabani School.** | | |
| | 1538 | Kamakhyacharan Bandyopadhyay ... | 16-3 | First |
| | 1539 | Dhirendranath Basak | 17 | Third |
| | 1541 | Phambinsan Bhar (Mm) ... ... | 16-1 | First |
| | 1542 | Bidyadhar Bhattacharyya (V) ... | 18-11 | First. |
| | 1543 | Amiyakanta Chaudhuri | 16 3 | First |
| | 1544 | Jagadindranath Das ... | 17 6 | Second |
| | 1545 | Atulyakumar Desarkar | 17 4 | First |
| | *1546 | Subaichandra Ghosh (MLml) ... | 16 | First |
| | 1547 | Baidyanath Mitra ... | 16-8 | First |
| | 1548 | Haripada Mukhopadhyay (m) ... | 16-7 | First |
| | 1549 | Bibhutibhushan Mallik | 16 | First |
| | 1550 | Bibhutibhushan Pal ... | 18 | Second. |
| | 1551 | Prabhatkumar Ray ... | 16-5 | First. |

| Roll. | No. | Name. | Age. | Division in which the candidate has passed |
|---|---|---|---|---|
| | | **Rani Bhabani School.** | | |
| Cal. | 1552 | Jitendranath Saha ... | 16-6 | First. |
| | 1553 | Prabhaschandra Saha | 16-6 | First. |
| | 1554 | Hrishikes Sil ... | 16-7 | First |
| | 1555 | Bimalchandra Ukil ... | 17-6 | First |
| | 1556 | Narendranath Das ... | 19 | First |
| | 1557 | Trilokes Basu (m) ... | 16-2 | First |
| | *1558 | Debendranath Majumdar (LVmMc) ... | 16 2 | First |
| | 1559 | Jitendranath Mukhopadhyay ... | 16-9 | First |
| | *1560 | Prabhatkumar Sarkar (uVMc) ... | 17-1 | First |
| | 1561 | Rajendranath Sur (m) | 16 | Second |
| | 1562 | Saurindrakumar Deb ... | 16 8 | First |
| | 1563 | Amlkumar Ghosh ... | 16-6 | First. |
| | 1564 | Ajaybhushan Ghoshal | 16 | Second. |
| | 1565 | Santoshkumar Ray ... | 16-2 | First |
| | 1567 | Atulkrishna Palit ... | 17-5 | Third |
| | 1568 | Gopalchandra Basu ... | 16 2 | Second |
| | 1569 | Amlkrishna Bandyopadhyay ... | 16 | First |
| | | **Balagarh H. E. School.** | | |
| | 1570 | Sheikh Fazal Rahaman (Mm) ... ... ... | | First |
| | 1571 | Mrityunjay Haldar (Mm) ... ... | 17 7 | First |
| | 1573 | Nripendranath Haldar (M) .. ... | 18 2 | First |
| | 1574 | Tarakgati Mustaphi ... | 17 3 | Second |
| | 1575 | Subodhkumar Bandyopadhyay . | 18-2 | Second |
| | 1577 | Kanailal Nandi ... | 18-7 | Second |
| | | **Baruipur H. E. School.** | | |
| | 1578 | Bishnucharan Bandyopadhyay .. | 18-6 | Second |
| | 1579 | Debendranath Chakrabarti ... ... | 16 | Second |
| | 1580 | Nanigopal Chakrabarti (m) ... | 17 2 | First |
| | 1581 | Sachindranath Datta . | 20 | Second |
| | 1582 | Dhirendranath Ghosh | 21 5 | Second |
| | 1583 | Sarojendrakrishna Ghosh ... ... | 16-4 | First |
| | 1584 | Tulsidas Ghosh ... | 18-4 | First |
| | 1585 | Debendrakumar Nath... | 17-9 | Second |
| | 1587 | Amlkumar Raychaudhuri .. ... | 19 | Second |
| | 1588 | Binaykrishna Raychaudhuri ... ... | 18-4 | Second |
| | 1591 | Bibhutibhushan Sarkar | 17-11 | First |
| | 1592 | Bimalenduprasad Dasgupta (m) .. | 16-1 | First. |
| | 1593 | Haridas Mandal ... | 17-8 | First |
| | | **Diamond Harbour H. E. School.** | | |
| | 1595 | Kshitischandra Bandya (Mm) ... ... | 16 3 | First |
| | 1596 | Birendranath Chakrabarti (m) .. | 17-10 | First |
| | 1597 | Harischandra Das (MV) | 19-9 | First |
| | 1598 | Subodhkumar Das (m) | 16-2 | First. |
| | 1600 | Kshitischandra Haldar (MLml) ... | 16-5 | First |
| | 1601 | Prasantakumar Haldar | 18 2 | First |
| | 1602 | Sunilchandra Haldar (Mml) ... ... | 16 7 | First. |
| | 1603 | Nagendranath Paru ... | 19-8 | First |
| | 1604 | Brajendrakumar Purkait (l) ... ... | 17-3 | First |
| | 1605 | Sachindrakumar Sarkar | 18 | Second |
| | 1606 | Ganeschandra Sau | 20 8 | First |
| | 1607 | Sadabrata Chakrabarti | 17-3 | Second |
| | 1608 | Sudhansubhushan Bandya .. | 16-3 | Second |
| | 1609 | Paresnath Bhattacharyya .. | 19-10 | First. |

| Roll. | No. | Name. | Age. | Division in which the candidate has passed. |
|---|---|---|---|---|
| | | **Diamond Harbour H. E. School.** | | |
| Cal. | 1610 | Rebatimohan Chakrabarti ... ... | 16 | First |
| | 1611 | Sibakrishna Haldar ... | 20-5 | First |
| | 1612 | Sunilchandra Sengupta (V) ... ... | 17 2 | First |
| | 1613 | Manojkumar Chattopadhyay ... | 16-6 | First |
| | 1614 | Manikratan Nazkar ... | 16-4 | First. |
| | | **Gustia K. N. H. E. School.** | | |
| | 1618 | Shaik Abdul Sobahan... | 17 | Third |
| | 1620 | Banbihari Bandyopadhyay ... | 18-4 | Second |
| | 1621 | Sailendranath Bhattacharyya ... | 17-11 | First |
| | 1622 | Kshetradas Chattopadhyay (M) ... | 16-6 | First |
| | 1623 | Kamalkrishna Chattopadhyay (M) ... | 18-4 | First. |
| | 1624 | Anadikumar Bandyopadhyay ... | 17-3 | First |
| | 1625 | Lalmohan Ghosh ... | 22-7 | Second |
| | 1626 | Jatischandra Ghosh (M) | 19 6 | First |
| | | **Santipur Oriental Academy.** | | |
| | 1627 | Shaik Nur Mahammad (Mml) ... | 17-5 | First |
| | 1628 | Jitendrakumar Nath ... | 16-3 | First |
| | 1629 | Brindabanchandra Sanyal (m) . | 16-5 | First |
| | | **Amarpur Bimala Agricultural H. E. Institution.** | | |
| | 1635 | Jatindranath Bhandari | 16-11 | First |
| | 1636 | Hemantakumar Sarkar | 20-4 | First |
| | 1637 | Krishnachandra Bhandari . . | 16-11 | First |
| | 1638 | Gaurdas Set (m) ... | 17-4 | First. |
| | 1639 | Narayanchandra Chaudhuri ... | 18 | Second |
| | 1642 | Krishnachandra Chakrabarti ... | 19-1 | First |
| | | **Singur Mahamaya Institution.** | | |
| | 1643 | Manindranath Barma... | 17-8 | First |
| | 1644 | Prasadkumar Mukhopadhyay (m) ... | 19-2 | First |
| | 1645 | Tinkari Sadhukhan (m) | 19-6 | First |
| | 1646 | Sudhirnath Bandyopadhyay ... | 17-4 | Third |
| | 1647 | Hrishikes Kole .. | 20-5 | Second |
| | 1648 | Tarapada Basu ... | 17-1 | First |
| | 1649 | Bijaykrishna Chakrabarti ... ... | 19 2 | Third |
| | 1650 | Satyaprasad Barma .. | 18 1 | First |
| | 1651 | Jatindranath Pan ... | 18 | Second |
| | | **Noakhila P. N. High School.** | | |
| | 1656 | Md Habibar Rahman .. | 16-5 | First |
| | 1657 | Md. Muzaffar Rahaman (Mm) ... | 17 2 | First |
| | 1658 | Shah Samsur Rahaman | 17-2 | First |
| | 1664 | Mazar Uddin Sirkar ... | 17 5 | Second. |
| | 1668 | Jajneswar Basu ... | 18 | Second |
| | 1669 | Kshudiram Sarkar ... | 16-6 | First. |
| | | **Jaynagar Institution.** | | |
| | 1670 | Sachindranath Mitra (Mm) ... ... | 17 | First |
| | 1672 | Sailendranath Datta (Mm) ... ... | 16-6 | First. |
| | 1673 | Bibhutibhushan Chakrabarti ... ... | 17-10 | Second |
| | 1674 | Sachindranath Bhattacharyya ... | 17-4 | Second |
| | 1675 | Chandrasekhar Bhattacharyya ... | 17-1 | Second. |
| | 1676 | Lalitmohan Sen ... | 22-8 | Second |
| | 1678 | Isanchandra Mukhopadhyay ... | 17-2 | First. |
| | 1680 | Satyendranath Ghosh .. | 18-1 | Third |
| | 1681 | Hrishikes Ghosh ... | 18-8 | First. |

| Roll. | No. | Name | Age. | Division in which the candidate has passed. |
|---|---|---|---|---|
| | | **Ranaghat P. C. N. E. School.** | | |
| Cal. | 1682 | Phakirchand Kar (Mm) | 17-5 | First |
| | 1683 | Manomohan Chakrabarti ... ... | 19 | Second. |
| | 1684 | Sibchandra Chattopadhyay ... | 17-2 | First |
| | 1685 | Kalidas Dechaudhuri (Mml) ... ... | 17-4 | First. |
| | 1686 | Gauriprasad Datta ... | 17-4 | Second |
| | 1687 | Kalipada Datta ... | 17-4 | First. |
| | 1688 | Krishnalal Datta (Mm) | 17-2 | First |
| | 1689 | Mrigendranath Datta | 16 | First |
| | 1690 | Abaninath Gangopadhyay ... | 16 2 | First. |
| | 1691 | Sambhunath Gangopadhyay ... | 17-2 | Second. |
| | 1692 | Nakuleswar Ghatak ... | 16-3 | First |
| | 1693 | Dulalmohan Ghosh ... | 16 5 | First |
| | 1694 | Kesabchandra Mitra ... | 19-4 | Second. |
| | 1695 | Ajitkumar Mukhopadhyay (Mm) ... | 16-1 | First. |
| | 1696 | Bipinchandra Mukhopadhyay (M) ... | 18-4 | First |
| | 1697 | Manikial Mukhopadhyay ... | 20-6 | First |
| | 1698 | Dwijendranath Mallik | 16-1 | Second |
| | 1699 | Dhirendranath Nandi | 16 1 | First |
| | *1700 | Raipada Pramanik (MLml) .. | 18 7 | First |
| | 1701 | Tarapada Sarkar ... | 19-4 | First |
| | 1702 | Prabodhkrishna Ghosh (m) ... ... | 16-1 | First |
| | *1703 | Sisirkumar Majumdar (MVmG) ... | 17-1 | First |
| | 1704 | Gaurchandra Bandyopadhyay ... | 19-2 | Second |
| | 1706 | Umakali Chakrabarti ... | 16-10 | First. |
| | 1707 | Parbaticharan Mitra ... | 16-3 | Second. |
| | | **Arbalia J. V. High School.** | | |
| | 1708 | Krishnadhan Mukhopadhyay ... | 21-5 | Second |
| | 1709 | Radharaman Mandal .. | 20-4 | Second |
| | 1710 | Kalisadhan Bhattacharyya (V) ... | 19-6 | First |
| | 1711 | Samarendranath Basu | 19 | First. |
| | 1712 | Paritoshkumar Basu ... | 16-5 | Second |
| | 1713 | Jitendranath Mitra ... | 16-6 | First |
| | | **Gobardanga H. E. School.** | | |
| | 1715 | Ramprasad De ... | 17-11 | First. |
| | 1716 | Ramkrishna Ash ... | 16-1 | First. |
| | 1717 | Mohitmohan Chattopadhyay ... | 18-5 | Third. |
| | 1718 | Debendranath Pal ... | 17-8 | First |
| | 1719 | Praphullakumar Mukhopadhyay ... | 19-3 | Second. |
| | | **Jaipur Phakir Das Institution.** | | |
| | 1720 | Kalipada Bhattacharyya (m) ... | 17-4 | First |
| | 1721 | Sripada Bhattacharyya | 16-9 | First |
| | 1722 | Manindranath Chakrabarti ... ... | 18-3 | First. |
| | 1724 | Gaurchandra Chhanda | 19-5 | Second. |
| | 1727 | Jogananda Das (M) ... | 18 1 | First |
| | 1728 | Satyabhushan Ray ... | 18-6 | First. |
| | 1730 | Bhaktibhushan Samanta ... | 17-2 | Second |
| | | **Jhikra H. E. School.** | | |
| | *1732 | Kartikchandra Bhattacharyya (MLml) ... | 17-5 | First. |
| | 1733 | Prabodhchandra Hajra (Mm) ... ... | 16-1 | First. |
| | 1734 | Kariprasad Nandi (M) | 16 2 | First. |
| | 1735 | Sasankasekhar Chaudhuri (M) ... | 17-7 | First. |
| | 1737 | Pramatharanjan Ray ... | 18-[illegible] | Third. |
| | 1738 | Abanikanta Ghosh (M) | 17-[illegible] | First. |

| Roll. | No. | Name. | Age. | Division in which the candidate has passed. |
|---|---|---|---|---|
| | | **Jhikra N. E. School.** | | |
| Cal. | 1739 | Binodbihari Pandit ... | 16-2 | First. |
| | 1740 | Brajanath Ray ... | 18-4 | First |
| | 1741 | Khagendranath Chattopadhyay ... | 19-7 | Second |
| | 1742 | Ajitkumar Bandyopadhyay ... | 18-11 | Second |
| | 1743 | Asutosh Das ... | 21-1 | First |
| | | **Sohagpur Shyamkishore N. E. School.** | | |
| | 1744 | Abanibhushan Pramanik (m) .. | 17-10 | Second |
| | 1748 | Madhusudan Chakrabarti ... ... | 17-6 | Second |
| | 1751 | Asutosh Bagchi ... | 18 - | Third. |
| | 1755 | Almas Ali Talukder ... | 17-7 | First. |
| | 1756 | Abul Fazal Khondakar | 18-1 | First |
| | 1757 | Habibor Rahman Sarker | 16-6 | Second |
| | | **Uttarparah Government High School.** | | |
| | *1760 | Manindramohan Bandyopadhyay (MLml) | 16-6 | First |
| | 1761 | Dhrubes Chattopadhyay (MLm) ... | 17-2 | First |
| | 1762 | Anilkrishna Gangopadhyay (m) ... | 17-8 | First |
| | 1763 | Sunilkumar Mukhopadhyay (Mm) ... | 16 1 | First |
| | 1764 | Sasadhar Nandi ... | 17-7 | First |
| | 1765 | Sibkrishna Bandyopadhyay (M) ... | 17-5 | First |
| | *1766 | Bishnupada Bandyopadhyay (MLmMc) ... | 18 | First |
| | 1767 | Sibadas Bandyopadhyay (Mm) ... ... | 18-9 | First |
| | 1768 | Manilal Ghosh (Mm) ... | 16-1 | First |
| | 1769 | Sachindranath Ghosh (MmMc) ... | 18-3 | First |
| | 1770 | Pasupatinath Goswami (m) | 17-5 | First |
| | *1771 | Kamalkrishna Mukhopadhyay (MmMc) ... | 16-5 | First |
| | 1772 | Raseswar Mukhopadhyay (Mm) ... | 17 8 | First |
| | 1773 | Panchanan Pal (m) ... | 18 1 | First |
| | 1774 | Manimohan Bandyopadhyay ... ... | 16-1 | First |
| | 1775 | Anilkumar Chattopadhyay (M) ... | 16-1 | First |
| | 1776 | Sankaranath Chattopadhyay ... | 17-1 | Second |
| | 1777 | Bibhutibhushan Datta | 18 | First |
| | 1778 | Gaurisankar Gangopadhyay (M) ... | 16-4 | First |
| | 1779 | Manujendrachandra Gupta ... ... | 19-1 | First |
| | 1780 | Tinkari Mukhopadhyay (l) | 17-7 | First |
| | 1781 | Nitaidhan Chattopadhyay ... | 18-1 | Second |
| | 1782 | Nandagopal Bandyopadhyay ... | 17-9 | First |
| | 1783 | Jibandhan Gangopadhyay ... | 16-8 | First |
| | 1784 | Rabindranath Goswami ... | 17 4 | Second |
| | 1785 | Barendranath Chattopadhyay ... | 17-1 | Second |
| | 1786 | Prabirkumar Chattopadhyay ... | 18-1 | Second. |
| | | **Brindabanchandra High School.** | | |
| | 1787 | Atulkrishna Bhattacharyya (m) ... | 17-5 | First |
| | 1788 | Prasadkumar Bhadra (Mm) ... ... | 16 2 | First. |
| | 1789 | Taranikanta Bagchi (Mm) .. ... | 18 1 | First. |
| | 1790 | Syamballabh Saha ... | 16 | First. |
| | 1791 | Banitbari Sahadalal (M) | 17-9 | First. |

| Roll. | No. | Name. | Age | Division in which the candidate has passed. |
|---|---|---|---|---|
| | | **Brindabanchandra High school, Pakutia.** | | |
| Cal. | 1792 | Basantakumar Malakar | 16-3 | First |
| | 1793 | Siteschandra Sen Gupta | 18 1 | First |
| | 1794 | Mohinimohan Saha ... | 18-4 | First. |
| | 1795 | Nagendrakumar Saha (Mm) ... ... | 19-1 | First |
| | 1796 | Anantalal Saha ... | 20-1 | First |
| | 1797 | Suryyendrakumar Saha | 19-1 | Second |
| | 1799 | Sureschandra Basak | 19-1 | Second |
| | 1800 | Jaminikanta Saha ... | 17-11 | Second |
| | 1802 | Jogeschandra Sd (M) ... | 20 | First. |
| | 1803 | Animeshchandra Sarkar | 16-1 | First |
| | 1805 | Radhaballabh Pal ... | 20-1 | Second |
| | 1807 | Madanmohan Mandal | 16-11 | Second |
| | 1810 | Pratapchandra Ray ... | 16-2 | First |
| | 1811 | Surendramohan Saha ... | 17 | Second. |
| | 1812 | Amulyachandra Saha ... | 19-7 | First |
| | 1813 | Sukhadananda Bhattacharyya ... | 18-11 | Second |
| | 1815 | Abdul Hai Khan ... | 17 | Second |
| | 1816 | Majibar Rahman ... | 18-7 | Second |
| | 1817 | Zahiruddin Ahmed (Mml) ... | 18-3 | First |
| | 1818 | Mohammed Abdur Rahman ... | 18-5 | First |
| | 1820 | Abdul Kaddus Miah ... | 17-2 | First |
| | 1821 | Hafezuddin Ahamed ... | 19 2 | Second |
| | | **Tamluk Hamilton High School.** | | |
| | 1822 | Mohinimohan Pati (Mml) ... | 17 | First |
| | 1824 | Basantakumar Manna (MLm) ... | 17-8 | First |
| | 1825 | Harakumar Bhattacharyya (M) ... | 20-3 | Second |
| | 1826 | Satischandra Pramanik | 18-8 | Second |
| | 1827 | Chandramohan Jana . | 21-1 | Second |
| | 1828 | Hemantakumar Maiti (Mm) .. ... | 16-1 | First |
| | 1829 | Haripada Maiti .. | 18-8 | Third |
| | 1830 | Prabhaschandra Dinda | 20-1 | Second. |
| | 1832 | Hemantakumar Patra | 17-8 | Second |
| | 1833 | Paresnath Ray (Mm) ... | 17-4 | First |
| | 1834 | Satischandra Maiti (Mm) ... ... | 21-6 | First |
| | 1836 | Birajabhushan Bhattacharyya (M) .. | 16-9 | First. |
| | 1837 | Sukeschandra Adhikari (Mm) ... ... | 18-8 | Second |
| | 1838 | Bhushanchandra Mandal ... | 19-4 | Second. |
| | 1840 | Gaurchandra Das (m) | 17-1 | First |
| | 1841 | Ramanimohan Pramanik ... | 20-1 | First. |
| | 1842 | Uttamprasad Samanta | 19-1 | First. |
| | 1843 | Bhushanchandra Panda (m) ... ... | 20-4 | First |
| | 1844 | Rakhalchandra Maiti .. | 19-9 | Second |
| | 1845 | Harendranath Bhunia (m) ... ... | 18 5 | First |
| | 1846 | Obaidur Rahman (Mm) | 16 | First. |
| | 1847 | Amarendranath Maji ... | 16-5 | Second. |
| | 1848 | Gokuldas Maiti (Mm) | 16-10 | First |
| | 1849 | Pasupati Santra ... | 16-4 | Second. |
| | 1850 | Radharanjan Bandyopadhyay ... | 16-3 | Second |
| | 1851 | Nrisinghaprasad Pakhira ... | 16-2 | First |
| | 1852 | Ajodhyaprasad Sinha . | 20 3 | Second |
| | 1853 | Amarendranath Basu .. | 19-2 | Second. |
| | 1854 | Himanankiran Mukhopadhyay (Mm) ... | 16 3 | First |
| | 1855 | Rabindranath Datta (MmMc) ... | 16 | First. |
| | 1856 | Murarimohan Maiti (Mm) | 19 7 | First |
| | 1857 | Subodhchandra Mandal (Mm) ... ... | 17-2 | First |
| | 1858 | Sudhirkumar Adhikari (M) ... ... | 20-4 | Second. |

| Roll. | No. | Name. | Age. | Division in which the candidate has passed. |
|---|---|---|---|---|
| | | **Tamluk Hamilton High school.** | | |
| Cal. | 1859 | Sailabhari Maiti (M) ... | 19 | First |
| | 1860 | Dhirendranath Bhaumik (m) ... ... | 21-3 | First |
| | 1861 | Sachidananda Barik ... | 18 7 | Second |
| | 1862 | Bhushanchandra Dinda (M) ... ... | 21-4 | First |
| | | **North Suburban School.** | | |
| | 1863 | Praphullakumar Ray (MVm) .. | 16-3 | First |
| | 1864 | Subodhkrishna Pal (Mm) .. ... | 16-3 | First |
| | 1865 | Satischandra Adhikari | 16-4 | First. |
| | 1867 | Binodbihari Ghorai ... | 17-6 | First |
| | 1869 | Mahatapchand Mitra (Mm) ... ... | 18 2 | First |
| | 1870 | Kishorimohan Basu (M) | 18 2 | First |
| | 1871 | Satyadulal Datta (M) . | 16 11 | First |
| | 1872 | Satyananda Bandyopadhyay ... | 16-2 | First |
| | 1873 | Amarnath Mukhopadhyay .. | 16 3 | Second |
| | 1875 | Birendrakumar Gangopadhyay .. | 16 | First |
| | | **Aryya Mission Institution.** | | |
| | 1876 | Paresnath Mallik ... | 17 9 | First |
| | 1877 | Amalkumar Dasgupta | 16 2 | First |
| | 1878 | Bankimchandra Chattopadhyay (H) ... | 17 11 | First. |
| | 1879 | Madanmohan Das . | 17 8 | First |
| | 1880 | Sudhindrakumar Sen (m) ... ... | 16-1 | First |
| | 1881 | Jagadischandra Haldar (m) ... .. | 18 5 | First |
| | 1882 | Radhamohan Parasad... | 22 3 | Second |
| | | **Saraswati Institution.** | | |
| | 1883 | Amarendranath Ghosh | 17 3 | First |
| | 1884 | Jitendranath Nayogi ... | 19 | Second |
| | 1887 | Bisweswar Bhadra ... | 17-7 | Second |
| | 1889 | Kanailal Pal ... | 18-7 | Second |
| | 1891 | Prabodhkumar Mukhopadhyay ... | 19 4 | First |
| | 1892 | Pannalal Pal .. | 18-1 | Second |
| | 1893 | Pasupatinath Basu ... | 19-6 | First |
| | 1894 | Pasupatinath Saha ... | 19 | First |
| | 1895 | Satischandra Mukhopadhyay ... | 16-11 | First |
| | 1896 | Sudhendranjan Ghosh | 17-5 | First |
| | 1897 | Sachindranath Chattopadhyay .. | 18-10 | Third |
| | 1898 | Sudhansekhar Das . | 18 7 | Second |
| | 1899 | Bhababandhu Bhattacharyya (M) ... | 17 | First |
| | 1900 | Bimbadhar Bandyopadhyay ... | 17 5 | Second |
| | 1901 | Bijaygopal Sur (m) ... | 16 4 | First |
| | 1903 | Debkumar Laha ... | 16 6 | Second |
| | 1904 | Murarimohan Basu (Mm) ... ... | 16 1 | First. |
| | 1905 | Nareschandra Das (M) | 16-4 | First. |
| | 1906 | Panchkari Pal ... | 18-1 | First |
| | 1907 | Phanindranath Biswas | 17-6 | First |
| | 1908 | Pratulchandra Chattopadhyay (M) ... | 17-7 | First |
| | 1909 | Sailendranath Mukhopadhyay (MmMc) ... | 17 | First. |
| | 1910 | Sibapada Mukhopadhyay (Mm) ... | 17-10 | First. |
| | 1911 | Ajaykumar Baral ... | 18-3 | Second |
| | 1913 | Nanigopal Kar .. | 16-8 | Second |
| | 1915 | Parbatcharan Bandyopadhyay (M) ... | 17 3 | First |
| | 1916 | Rasbihari Nan ... | 18-5 | Third |
| | 1917 | Sudhirkumar Ghosh ... | 18 | Second. |
| | 1918 | Srischandra Chattopadhyay ... | 20 2 | Second. |
| | 1919 | Satyasadhan Datta ... | 17-1 | First. |
| | | **Saraswati Institution.** | | |
| Cal. | 1920 | Sitanath Ray ... | 17-9 | First |
| | 1922 | Hrishikes Bandyopadhyay ... | 17-8 | Second |
| | 1924 | Kartikchandra Basak ... | 17-3 | First |
| | 1925 | Manmathanath Chakrabarti ... ... | 17-2 | First. |
| | 1926 | Amulyaratna Sengupta | 17-6 | Third |
| | 1927 | Amiyacharan Ghosh ... | 16-7 | Second. |
| | 1928 | Birendranath Kundu ... | 16-1 | First |
| | 1929 | Binodlal Goswami ... | 18-2 | Second |
| | 1930 | Basantakumar Saha ... | 17 9 | Second |
| | 1931 | Debendranath Mukhopadhyay ... | 17-4 | First |
| | 1932 | Dhirendranatan Chakrabarti ... ... | 18-1 | Second |
| | 1933 | Haridhan Datta ... | 18-3 | First |
| | 1934 | Kamalkumar Nagchaudhuri .. .. | 17-4 | Second |
| | 1935 | Kalidas Sen (M) ... | 16 1 | First. |
| | 1936 | Krishnamohan Datta .. | 18-4 | First |
| | 1937 | Prakashchandra Seth .. | 18-3 | First |
| | 1938 | Pasupatinath Ghosh ... | 17-2 | Third |
| | 1939 | Prankumar Sengupta... | 18 2 | First |
| | 1940 | Pannalal Mallik ... | 16 8 | Second |
| | 1941 | Prabodhchandra Basak (M) ... .. | 18-3 | First |
| | 1942 | Pramathanath Mukhopadhyay ... | 17-3 | First |
| | 1943 | Rameschandra Bhattacharyya ... | 16-1 | First |
| | 1944 | Radhamadhab Saha ... | 22-10 | Second |
| | 1945 | Ranendranath Ghosh | 17 2 | Second |
| | 1946 | Sambhunath Ray .. | 16-7 | First. |
| | 1947 | Sachindranath Das (m) | 18 4 | First. |
| | 1948 | Chunilal Pal ... | 18 2 | Second. |
| | 1949 | Girindranath Ghosh ... | 16 7 | Second |
| | 1950 | Jyotiprasad Basu .. | 17 3 | Second |
| | 1951 | Narayandas Chattopadhyay (m) ... | 20 3 | First |
| | 1952 | Phanibhushan Ghosh ... | 17 | Second. |
| | 1954 | Sailendranath Majumdar ... ... | 17-6 | Second |
| | 1955 | Hirendramohan Chattopadhyay ... | 16-3 | First |
| | *1956 | Nirendranarayan Chaudhuri (Lm) ... | 16-4 | First |
| | *1957 | Prabhatnath Basusarbadhikari (Mlm) ... | 16-6 | First |
| | *1958 | Sudhindranath Kundu (MlmMc) .. | 17 | First |
| | 1960 | Dhirendranath Datta .. | 22 | Second |
| | 1961 | Praphullakumar Guha | 18-4 | Third |
| | 1962 | Sudhirchandra Mitra .. | 18-3 | Third |
| | | **Rani Bhabani School.** | | |
| | 1965 | Sunilkumar Sur ... | 18-7 | Third |
| | 1967 | Taraknath Mitra .. | 18-2 | Third. |
| | 1968 | Jitendranath Basu ... | 18-1 | Third |
| | 1970 | Sachindramohan Datta | 18-11 | Third |
| | | **Sohata H. E. School.** | | |
| | 1972 | Sudhirchandra Basu ... | 17 4 | First. |
| | 1973 | Bimalacharan Mukhopadhyay (Mml) ... | 16-1 | First |
| | 1974 | Sriram Chattopadhyay (ml) ... ... | 19-1 | First |
| | 1975 | Harendranath Majumdar ... ... | 19-4 | First |
| | 1976 | Haricharan Nath (Mml) | 18 | First. |
| | 1977 | Bhupendranath Mukhopadhyay (Mm) ... | 17-1 | First. |
| | 1978 | Kirankumar Gangopadhyay (M) ... | 18-1 | First. |
| | 1979 | Smasaneswar Mukhopadhyay (mH) ... | 18-1 | First. |
| | 1980 | Praphullahari Chattopadhyay ... | 19-7 | Third. |

| Roll. | No. | Name. | Age. | Division in which the candidate has passed. |
|---|---|---|---|---|
| | | **Andul M. C. E. School.** | | |
| Cal. | 1981 | Durgapada Chakrabarti | 16-4 | First. |
| | 1982 | Bhutnath Chattopadhyay (Ll) ... | 16-5 | First |
| | 1983 | Aswinikumar Mukhopadhyay (Mm) ... | 16-6 | First. |
| | 1984 | Sudhansubhushan Mukhopadhyay (m) | 17-9 | First |
| | 1985 | Suryyanarayan Kunduchaudhuri (Mm) ... | 17-10 | First |
| | 1986 | Debdas De ... | 17-9 | First |
| | 1987 | Biswabinod Ghosh (M) | 17-3 | First |
| | 1988 | Pulinbihari Bandyopadhyay ... | 16-1 | Second |
| | 1989 | Manikial Ray ... | 17-9 | Second |
| | 1990 | Chaitanyacharan Rakshit ... | 16-7 | First |
| | 1991 | Saratchandra Chakrabarti (m) ... | 18-4 | First |
| | 1992 | Anathnath Chakrabarti | 17-1 | Second |
| | 1993 | Dhananjay Mallik ... | 19 4 | Second |
| | 1995 | Narayanchandra Ray | 18-11 | Second. |
| | 1998 | Bibhutibhushan Mukhopadhyay .. | 17 | Third |
| | 1999 | Prasantakumar Chaudhuri ... ... | 18-8 | Second. |
| | 2000 | Gaurabendra Kunduchaudhuri ... | 16-9 | First. |
| | 2003 | Praphullakumar Ghosh | 16-4 | Third |
| | | **Madarat Popular Academy.** | | |
| | 2006 | Sudhamay Marik ... | 22-2 | Second. |
| | 2007 | Binaykrishna Bandyopadhyay ... | 20-5 | First. |
| | 2009 | Bibhutibhushan Bandyopadhyay .. | 16-8 | Second |
| | 2010 | Pulinbihari Adhikari ... | 17-7 | First. |
| | 2011 | Sibaprasad Datta ... | 19 10 | Second |
| | | **Magrahat M. A. O. School.** | | |
| | 2012 | Satischandra Naskar ... | 17 | First |
| | 2013 | Pasupati Paladhi ... | 18-10 | First |
| | 2014 | Rabindranath Mitra ... | 17-7 | Second |
| | 2015 | Ajaymadhab Sen ... | 21-8 | Third |
| | 2017 | Natabar Naskar ... | 16 | Second. |
| | 2018 | Pilton Molla ... | 21-7 | Second |
| | 2020 | Atulchandra Das ... | 21-1 | Second |
| | 2022 | Susilkumar Basu ... | 17-8 | Second |
| | 2024 | Mohammad Mojidull Huq ... ... | 21-6 | Third. |
| | 2025 | Moniruddin Ahamed ... | 20 7 | Third |
| | | **Panitras H. E. School.** | | |
| | 2026 | Srikalicharan Byaborta | 21-2 | First. |
| | 2027 | Syamapada Raychaudhuri ... ... | 17-10 | Second |
| | 2028 | Bibhutibhushan De ... | 16-6 | First. |
| | 2029 | Bipinbihari Manna (Mm) ... ... | 17-6 | First. |
| | 2030 | Bibhutibhushan Haldar | 19-1 | First. |
| | 2031 | Bishnupada Hajra ... | 20-2 | Second |
| | 2032 | Sudhansusekhar Bandyopadhyay ... | 21 1 | First. |
| | 2033 | Bhupendranath Sarkar | 21-1 | First |
| | 2034 | Rasbihari Datta (Mml) | 20-5 | First |
| | 2035 | Dhirendranath Ghoshal (Mm) ... ... | 17-10 | First |
| | 2036 | Kisorimohan Raychaudhuri (Mml) ... | 16-8 | First |
| | 2037 | Sudhansusekhar Mukhopadhyay (Mml) ... | 19-5 | First. |
| | 2038 | Manindramohan Ghoshal ... | 16-11 | First. |
| | 2039 | Krishnapada Bhattacharyya (l) ... | 18 | First |
| | 2040 | Bijaykumar Bandyopadhyay ... | 16-9 | First. |

| Roll. | No. | Name. | Age. | Division in which the candidate has passed. |
|---|---|---|---|---|
| | | **Itachuna Sreenarayan Institution.** | | |
| Cal. | 2041 | Jitendranath Sur ... | 20-11 | Second. |
| | 2042 | Anandamohan Sur ... | 17-3 | First. |
| | 2043 | Priyagopal Sinharay (Mm) ... ... | 21-1 | First |
| | 2044 | Biswanath Ray (Mml) | 16-6 | First |
| | 2045 | Bibhutibhushan Mukhopadhyay ... | 18-4 | First. |
| | 2047 | Pundarikaksha Misra | 17-1 | First |
| | 2048 | Ullaschandra Mandal (m) | 17 3 | First. |
| | 2049 | Charuchandra Kowar ... | 21-3 | First. |
| | 2050 | Sripatinath Ghosh (Mm) ... ... | 17-4 | First. |
| | 2051 | Aswinikumar Ghosh ... | 20-5 | First |
| | 2052 | Kaminimohan Chakrabarti (m) ... | 16-2 | First |
| | 2053 | Bibhutibhushan Basu (m) ... ... | 16-8 | First |
| | | **Saradacharan Aryan Institution.** | | |
| | 2054 | Sibakumar Upadhya (MLml) ... | 17-1 | First |
| | 2055 | Bimalakanta Bhattacharyya (Lml) ... | 16-5 | First |
| | 2056 | Birendrakrishna Datta (Mm) ... ... | 16-5 | First |
| | 2057 | Haridhan Mukhopadhyay (ML) ... | 19-3 | First |
| | 2058 | Anathnath Ghosh (M) | 16-1 | First |
| | 2059 | Paresnath Chakrabarti (MLm) ... | 18 | First |
| | 2060 | Bibhupada Bandyopadhyay (M) ... | 16-4 | First |
| | 2061 | Prakaschandra Mukhopadhyay (Mm) ... | 16-5 | First |
| | 2062 | Sachindranath Saha ... | 22 | Second |
| | 2063 | Jagannath De ... | 18-1 | First. |
| | 2064 | Sisirkumar Bandyopadhyay ... | 18 9 | Second |
| | 2065 | Ganeschandra Laha ... | 17-8 | Second |
| | 2066 | Panchugopal Datta ... | 17-5 | First |
| | 2067 | Surendralal Pal ... | 17-1 | Second |
| | 2068 | Sureschandra Bhadra | 18-2 | Second. |
| | 2069 | Nagendramohan Bandyopadhyay ... | 17 6 | Third |
| | 2071 | Gobindalal Chakrabarti | 17-1 | Second. |
| | | **Hindu School, Calcutta.** | | |
| | 2072 | Bibhutibhushan Brahma (m) ... | 17 | First. |
| | 2073 | Dulalchandra Datta ... | 20 | Third. |
| | 2074 | Tinkari Maitra ... | 16-1 | First |
| | 2075 | Saurendranarayan Ray (m) ... ... | 16-8 | First |
| | 2076 | Rammohan Sil ... | 17-4 | First |
| | 2078 | Pasupatinath Chattopadhyay (MVm) ... | 16-5 | First |
| | 2079 | Ganeschandra Ray ... | 16 5 | Second |
| | 2080 | Kalipada Sarkar ... | 16-6 | First |
| | 2081 | Sailendranarayan Ray | 16-4 | Second |
| | 2084 | Akshaykumar Bhattacharyya ... | 18 | Second |
| | 2085 | Sudhirkumar Chattopadhyay ... | 16-8 | Third |
| | 2089 | Krishna Bhagat (m) ... | 18-4 | Second |
| | | **Jujersa Prannath Manna Institution.** | | |
| | 2090 | Balaichandra Khara ... | 17-1 | First. |
| | 2091 | Sudinchandra Das ... | 18-2 | Second |
| | 2092 | Pratulchandra Basu ... | 19-1 | Second |
| | 2093 | Saratchandra Sardar ... | 20 3 | First. |
| | 2094 | Jibandhan De ... | 19-8 | Second |
| | 2095 | Bhabadaprasad Manna | 18-7 | Second |
| | 2096 | Dukhiram Nag ... | 21-4 | Second |
| | 2098 | Shaikh Mahamed Faridar ... | 18-1 | Second |
| | 2099 | Kalipada Adak ... | 18-8 | Second |
| | 2102 | Praphullakumar Ray ... | 21-1 | Second |
| | 2103 | Sibchandra Bandyopadhyay .. | 20-4 | Third. |

| Roll. | No. | Name. | Age. | Division in which the candidate has passed |
|---|---|---|---|---|
| | | **Jhapordah Duke Institution.** | | |
| Cal. | *2105 | Jibankrishna Pal (MLVml) ... | 19-1 | First |
| | *2106 | Prasadchandra Pal (MLml) ... | 17-11 | First |
| | 2107 | Radharanjan Ghosh (m) | 17 5 | First |
| | 2108 | Tulsicharan Datta (Mm) | 17-11 | First |
| | 2109 | Purtendusekhar Srimani ... | 18-2 | First |
| | 2110 | Hrishikes Mukhopadhyay (m) ... | 16 2 | First |
| | 2112 | Bibhutibhushan Bandyopadhyay ... | 18-3 | First |
| | 2113 | Tarapada Gangopadhyay ... | 18-3 | Second |
| | 2114 | Prasaddas Sinha ... | 16 | First. |
| | 2116 | Tarapada Chaudhuri ... | 19-5 | Second |
| | 2117 | Gopalchandra Bhattacharyya ... | 19-1 | First |
| | 2119 | Umaprasad Chattopadhyay .. | 18-8 | First |
| | 2120 | Khagendranath Ghosh | 18 3 | First |
| | 2121 | Amarendranath Datta... | 16 | First |
| | 2122 | Sudhakar Mukhopadhyay ... | 17 11 | Second. |
| | 2123 | Biswanath Chattopadhyay ... | 18 1 | First |
| | 2124 | Adhirchandra Bandyopadhyay ... | 20 6 | Second |
| | 2125 | Dhirendranath Chattopadhyay ... | 17-3 | Second |
| | | **Janglipara D.N. H. E. School.** | | |
| | 2129 | Chandicharan Majumdar ... ... | 16 3 | First |
| | 2130 | Sudhansusekhar Sinharay .. ... | 16 3 | First |
| | 2131 | Dinabandhu Mallik ... | 18 4 | Third |
| | 2132 | Rabindranath Mitra .. | 18 1 | Second |
| | 2133 | Mahadebsekhar Mitra... | 16-1 | Third |
| | | **Shambazar Vidyasagar School.** | | |
| | 2137 | Bholanath Bhar ... | 18 1 | Second |
| | 2138 | Jatindranath Basu ... | 18 1 | Second |
| | 2139 | Mambhushan Chattopadhyay ... | 17-4 | First |
| | 2140 | Sudhirchandra Das ... | 17-6 | Second |
| | 2141 | Prabhatchandra De .. | 17 | First |
| | 2143 | Ramsankar Datta (L) | 16 1 | First |
| | 2144 | Surendranath Datta ... | 16-5 | First. |
| | 2145 | Gopeswar Gangopadhyay (Mm) ... | 16-7 | First |
| | 2146 | Dhirendranath Ghosh | 17-3 | Second |
| | 2147 | Girischandra Ghosh ... | 16 3 | Second |
| | 2148 | Nalinikumar Mukhopadhyay ... | 16-1 | First |
| | 2149 | Narendranath Rakshit | 18-7 | Second |
| | 2150 | Radhikaprasad Ray (M) | 17 | First. |
| | 2151 | Khagendranath Sen ... | 17-8 | Third |
| | 2152 | Krishnakumar Gangopadhyay (M) ... | 17-3 | First |
| | 2153 | Harichran Mukhopadhyay ... | 18-2 | Third |
| | 2155 | Dwijendranath Datta | 19 8 | Second |
| | 2156 | Bibhutibhushan Ghosh | 16-8 | First. |
| | 2157 | Baubhari Goswami ... | 16-3 | First |
| | 2158 | Birendranath Mitra ... | 17-1 | Second. |
| | 2159 | Ganenchandra Mitra ... | 16 | Second |
| | 2161 | Ganeschandra Sarkar | 16-10 | Second |
| | 2162 | Nitaichandra Chakrabarti ... ... | 20 | Second |
| | | **Kalighat High School.** | | |
| | 2163 | Kshitischandra Mukhopadhyay (m) ... | 18 1 | First. |
| | 2165 | Kuberchandra Ghosh (m) ... ... | 16-1 | First |
| | 2166 | Sailendranath Mukhopadhyay ... | 16-3 | Second. |

| Roll | No. | Name. | Age. | Division in which the candidate has passed. |
|---|---|---|---|---|
| | | **Kalighat High School.** | | |
| Cal. | 2168 | Syamapada Chattopadhyay (m) ... | 18-4 | First |
| | 2170 | Manikal De .. | 17 | First |
| | 2172 | Bhupeschandra Bhattacharyya (m) ... | 16 8 | First |
| | 2173 | Gobardhan Shit (m) ... | 19 8 | First. |
| | 2174 | Lalmohan Mukhopadhyay ... | 18 | First |
| | 2175 | Manmathanath Das (m) | 19 9 | First |
| | 2176 | Harimohan Mukhopadhyay (Mm) ... | 16-7 | First |
| | 2177 | Mamlal Chattopadhyay | 18 2 | Second |
| | 2178 | Tarakumar Mukhopadhyay ... | 17-5 | First |
| | 2179 | Girindrachandra Dasgupta ... | 17-10 | Second |
| | 2180 | Bishnusadhan Sarkar | 17 6 | First |
| | 2181 | Bhupeschandra Sengupta ... | 17-9 | Second |
| | 2182 | Prankrishna Bandyopadhyay ... | 18 | Second |
| | 2183 | Nirmalchandra Raychaudhuri ... | 16-2 | First |
| | 2184 | Saurindramohan Datta ... | | Third |
| | 2187 | Sahibhari Mukhopadhyay .. | 16-10 | First |
| | 2188 | Panchugopal Bandyopadhyay ... | 18-2 | Second |
| | 2190 | Prandhan Mukhopadhyay ... | 17-9 | Second |
| | 2191 | Syamapada Bandyopadhyay ... | 18 4 | Third |
| | 2195 | Sureschandra Bhattacharyya ... | 16-4 | Second. |
| | 2197 | Akshaykumar Mukhopadhyay ... | 18-3 | Third |
| | 2198 | Kshetramohan Mukhopadhyay .. | 17 | Second |
| | | **Amta H. E. School.** | | |
| | 2199 | Nitaicharan Haya ... | 18-6 | First |
| | | **St. Anthony's School.** | | |
| | 2200 | Syed Saberali (M) .. | 16-9 | First |
| | | **Jhapordah Duke Institution.** | | |
| | 2202 | Rampada Ghosh ... | 17 10 | Second |
| | | **Kalighat High School.** | | |
| | 2203 | Asutosh Datta ... | 16-11 | First |
| | 2205 | Kamalakanta Das .. | 18-10 | Second. |
| | 2207 | Birendranath Sarkar | 17-6 | First |
| | | **Baghbazar High School.** | | |
| | 2213 | Jugalkishore Narayan Sinha ... ... | 18-4 | Second. |
| | 2214 | Shardaprosad Verma ... | 18-10 | Second. |
| | 2215 | Deo Bir Panday Kshetry ... | 17 | First |
| | 2216 | Tejnarayan Jha ... | 21 | Second |
| | 2217 | Ramkrishna Adhya ... | 18 6 | First |
| | 2218 | Amarendranath Mukhopadhyay (Mm) ... | 16-5 | First. |
| | 2219 | Mrityunjay Gangopadhyay ... | 18 11 | Second |
| | 2220 | Anilchandra Chakrabarti (Mm) ... | 17 | First |
| | 2226 | Sunilkumar Gupta ... | 17-9 | Second. |
| | 2228 | Saradacharan Das ... | 16-9 | Third |
| | 2229 | Prabodhchandra Gangopadhyay (Mml) ... | 17-2 | First |
| | 2230 | Haripada Bandyopadhyay (Mm) | 16-11 | First. |
| | 2231 | Kasinath Mukhopadhyay | 17-11 | Second |
| | 2232 | Lalitmohan Sarkar ... | 19-1 | Second. |
| | 2233 | Krishnalal De ... | 19-1 | First. |

| Roll. | No. | Name. | Age. | Division in which the candidate has passed. |
|---|---|---|---|---|
| | | **Kheiatchandra Calcutta Institution.** | | |
| Cal. | 2231 | Pramadchandra Das ... | 19-1 | Second |
| | 2235 | Haripada Ghosh ... | 18 | Third. |
| | 2236 | Anantalal Pain ... | 18-1 | Third |
| | 2237 | Amalananda Ghoshal | 17 | First. |
| | 2238 | Atulchandra Ray ... | 18-1 | First |
| | 2239 | Taraknath Chandra ... | 16 3 | Third |
| | 2242 | Sandhyakusum Mitra | 17-1 | Second |
| | 2243 | Prabodhchandra Mitra | 18 2 | Third |
| | 2244 | Bholanath Chattopadhyay (M) ... | 17-1 | First |
| | 2245 | Bisweswardas Bandyopadhyay ... | 16 9 | Second |
| | 2248 | Santoshkumar Mukhopadhyay ... | 20 4 | Second |
| | 2252 | Ramchandra Kundu .. | 19-1 | Second |
| | 2253 | Manmathanath Mukhopadhyay ... | 19-2 | First |
| | 2255 | Bibhutibhushan Raychaudhuri ... | 18 | Second |
| | 2257 | Satyadas Bandopadhyay | 16-4 | Third |
| | 2259 | Purnachandra Bandyopadhyay ... | 16-1 | First |
| | 2261 | Ramgati Mitra ... | 19 5 | Second |
| | 2263 | Bishwanath Sahai .. | 23-7 | Second |
| | 2264 | Data Ram Srivastava | 23 8 | First |
| | 2265 | Sukumar Ghosh .. | 20 8 | First |
| | 2266 | Praphullakumar Bandyopadhyay (Mm) .. | 22 6 | First |
| | 2267 | Jamnaprasad Dube ... | 18 2 | First |
| | 2268 | Deo Dinkar Ganesh (Mm) ... ... | 18-8 | First |
| | 2269 | Yashwant Bajirao Khanjode (M) ... | 20-11 | First |
| | 2270 | Krishna Trimbak Joshi (M) ... .. | 21-7 | First |
| | 2271 | Hari Ramchandra Palsoley ... | 16-7 | Second |
| | 2272 | Mukund Ramchandra Palsoley ... | 20-10 | First |
| | 2273 | Kolankar Janardan Haribar .. | 29-2 | First |
| | 2274 | Vyankatesh Dhundiraj Shembekar ... | 19-11 | Second |
| | 2275 | Prabhakar Madhav Shembekar ... | 22-6 | Second |
| | 2276 | Sadashiv Ganesh Joshi | 23 4 | Second |
| | 2277 | Keshao Waman Ratnaparkhi ... .. | 22-6 | Second |
| | 2279 | Penumatcha Venkatrama Raju (M) ... | 20-8 | First |
| | 2281 | Kodali Ananthaiah (m) | 19 11 | First |
| | 2282 | K Raghavaiah ... | 19-7 | Second |
| | 2283 | P V Gopalakrishnayya | 17-9 | Second |
| | 2284 | Divi Satyanarayana ... | 16-5 | Second |
| | 2285 | Jasthy Rama Kotaiah... | 20-5 | First |
| | 2286 | Devabhakthuni Nandi Symardu ... | 18-5 | First |
| | 2287 | Kasturi Samba Siva Rao | 20-8 | Third |
| | 2288 | Deva Bhakthuni Rathnaiah ... ... | 18 10 | Third |
| | 2289 | Kaza Hanumantha Rao (m) ... | 18-6 | First |
| | 2290 | Inamganti Rangachariyalu ... ... | 17 7 | Second |
| | 2297 | Gazula Sreeranganayakulu ... ... | 17-8 | Second |
| | 2299 | Karumanchi Raghava Rao ... ... | 18 3 | Second |
| | 2310 | Mendu Venkata Narasayya (m) ... | 18-11 | First |
| | 2302 | M. Subbaraju ... | 16-9 | Second |
| | 2303 | Godavarti Ramakrishna Rao ... ... | 18 | Second. |
| | 2304 | Pathu Keochi Somasundara Sastri ... | 17-11 | Second |
| | 2305 | Alaparty Subbaiah ... | 17-10 | Third |
| | 2306 | Garimella Venkata Subba Rao ... | 21-5 | Third. |
| | 2307 | Potula Suryanarayana | 21-8 | Second. |
| | 2308 | D. N Chowdhary ... | 18-8 | Second |
| | 2309 | Dharanipragada Venkata Rangayya (V) | 19-2 | Second |
| | 2310 | Chittury Satyakasi Viswesvara Rao ... | 22-3 | Second |
| | 2311 | Chimalapati Narayana | 17 | Second. |
| | 2316 | K Raja Sekhararaw ... | 21-8 | Second |
| | 2319 | G Satya Narayana Murty ... | 17-10 | Second |
| | 2320 | Kottapalli Lingaraju ... | 25 6 | Second |
| | 2321 | Ch Jangamaiah ... | 19-2 | Second |
| | 2324 | V. Venkata Subbayya | 16-8 | Second |
| | 2326 | Jampala Sangaiah ... | 23-5 | Second |
| | 2327 | Medabalimi Venkatramayya ... | 21 7 | Second |
| | 2328 | Vasireddy Ramanaidu | 18 9 | Third |
| | 2330 | Mosali Kanty Rama Rao ... ... | 20-8 | First |
| | 2331 | Vasireddy Ramaswami | 21-4 | Third |
| | 2332 | Velagala Bapireddy ... | 16 10 | Second |
| | 2333 | B T Gopala Charyulu | 19 5 | Third |
| | 2335 | Narra Jagga Rao .. | 20 8 | Second |
| | 2336 | Kanchumarty Venkata Subba Rao ... | 23 5 | Second. |
| | 2337 | Gudimetla Bapireddi ... | 20-7 | Second. |
| | 2338 | Gudimetla Venkata Reddy ... | 28-5 | Second. |
| | 2340 | Satty Veera Reddy ... | 17-6 | First |
| | 2344 | K V Gopal Rao ... | 21-8 | Second |
| | 2345 | Chadalawada Chandra Sekhara Rao . | 18-5 | Third |
| | 2346 | Kalari Venkata Subba Rao ... ... | 17-7 | Second |
| | 2347 | V Kotayya ... | 18-5 | Second |
| | 2348 | B Adi Narayana ... | 22 8 | Second |
| | 2349 | Chadalavada Kanakambara Rao .. | 19-1 | Second |
| | 2351 | Gadepalli Ramamurty | 23 11 | First |
| | 2355 | Gandham Narasimha Sarma .. ... | 21-10 | Second |
| | 2358 | Malladi Suryanarayana | 17-6 | Third |
| | 2360 | Mohammed Salauddin .. | 17-10 | Second. |
| | 2361 | K M Damodaram ... | 25-8 | Second. |
| | 2362 | P Srirangam ... | 18-4 | Second |
| | 2364 | Syed Amirali Jawahery | 17 9 | First |
| | 2365 | Mohammad Imamuddin | 19-8 | First |
| | 2366 | Mohamad Ebadat Hossain .. | 19-2 | First |
| | 2367 | Gaya Prasad Verma (m) | 23-2 | First |
| | 2369 | Syed Safdar Imam ... | 19-11 | Second |
| | 2370 | Trilokinath .. | 22-10 | First |
| | 2371 | Sukhdeo Sahai ... | 22-6 | Second |
| | 2374 | Moinuddin ... | 18 | First. |
| | 2375 | Mohommad Fakhrejohan Khan ... | 17-6 | First. |
| | 2377 | Md Ibrahim, I ... | 20-7 | Second |
| | 2378 | Shah Anis Hasan ... | 22-6 | Second |
| | 2379 | S M Intesarul Haque | 16 | First |
| | 2381 | A Z M A Rahim ... | 18-4 | Second |
| | 2383 | Md Ahsan ... | 16-9 | Second |
| | 2386 | Shaikh Anwarul Hasan | 16-7 | Third |
| | 2387 | Nasir Husain Khan (V) | 20-3 | First |
| | 2389 | S Zamir Husain ... | 24-4 | First. |
| | 2391 | Syed Sajjad Husain ... | 23-1 | First |
| | 2392 | Abdul Morid Meah ... | 18-2 | Second |
| | 2394 | K M Sayedul Islam ... | 18-2 | Second |
| | | **Hindu School, Calcutta.** | | |
| | 2395 | Atulchandra Ghosh (Lml) ... ... | 16-1 | First |
| | 2396 | Balaram Chandra .. | 16 3 | First |
| | | **Taltala High School.** | | |
| | 2397 | Mohammad Zakiruddin ... | | Second. |
| | 2399 | C K Narayanan Nair (Mm) ... ... | 25 2 | First |
| | 2400 | Mohammed Ali Khan | 18 | Third |
| | 2401 | Thomas Varughese ... | 16-6 | Third. |

| Roll. | No. | Name. | Age. | Division in which the candidate has passed. |
|---|---|---|---|---|
| | | **Taltala High School.** | | |
| Cal. | 2402 | Mohd. Usman ... | 24-3 | Third |
| | 2403 | A. Moid Siddiqi ... | 23-2 | Second. |
| | 2404 | Bandiprosad Shau ... | 18-2 | Third. |
| | 2406 | Md Shamsuddin ... | 17-10 | Second |
| | 2407 | Sidheswarprosad Singh | 19-2 | Second |
| | 2408 | Abdul Jabbar ... | 17 | Second |
| | 2409 | Abu Naim Ahmad ... | 21-6 | Third |
| | 2410 | A. M. Yehya ... | 17-2 | First |
| | 2411 | Hassan Akhter ... | 18-2 | Second |
| | 2413 | Mohammad Abdul Matin ... ... | 18 2 | First |
| | 2414 | Mohd Moinuddin ... | 18 | Second |
| | 2415 | Syed Mohammad Saleh | 19-6 | Second |
| | 2416 | Syed Najmul Hassan Razvi ... ... | 19-4 | First |
| | 2417 | S M Abbas Hashim ... | 21 | Second |
| | 2418 | Syed Mohammad Safi Ahmad ... | 17-1 | Second |
| | 2420 | Syed Saghirul Hassan | 16-1 | First |
| | 2421 | Syed Manzurul Hakim | 20-4 | Third |
| | 2425 | Ebadot Ali Khan ... | 17-1 | First |
| | 2426 | Shaik Md Daud ... | 16-3 | First |
| | 2427 | Krishnachandra Bhattacharyya (Min) .. | 16-1 | First |
| | 2428 | Sudhirchandra Datta, II (M) ... ... | 17-6 | First. |
| | 2429 | Prabodhchandra Ghosh | 18-10 | Second |
| | 2430 | Sibanath Ghosh (M) ... | 16 | First. |
| | 2431 | Kripendranath Haldar | 18-1 | First |
| | 2432 | Prabhaschandra De ... | 17-8 | Second |
| | 2434 | Surendranath Mandal | 17-4 | Third |
| | 2435 | Satischandra Das ... | 16 10 | Second |
| | 2437 | Birendralal Basumajumdar ... | 16-6 | Second |
| | 2438 | Nanigopal Karmakar ... | 21-10 | First |
| | 2445 | Mirza Md Mustaghni Beg ... | 16-2 | Third. |
| | 2447 | Asutosh Chakrabarti ... | 16-2 | Second |
| | 2448 | Mohd Salman Khan ... | 18-1 | Third. |
| | 2449 | Satyadeo Narayan ... | 19-2 | Second |
| | 2451 | Rafatalio Kuraishie ... | 21 2 | First |
| | 2452 | Md Shibli ... | 17-5 | Second. |
| | 2453 | Mohammad Mustafa ... | 20-7 | Second |
| | 2454 | Md Mahmud Husan .. | 17-6 | Second |
| | | **Budge Budge P. K. H. E. School.** | | |
| | 2455 | Nanigopal Bhattacharyya ... | 18 1 | Second. |
| | 2457 | Kartickchandra Gangopadhyay ... | 18 9 | First. |
| | 2458 | Krishnakisor Ghosh ... | 17-1 | Second. |
| | 2459 | Purnachandra Datta ... | 18 3 | First. |
| | 2460 | Rajendranath Khara ... | 18 7 | First |
| | 2461 | Nutbihari Ghosh (Ml) | 16-6 | First. |
| | 2462 | Nidhiram Chakrabarti (M) ... | 16-4 | First |
| | 2463 | Radhikamohan Deb ... | 18-1 | Second |
| | 2464 | Nanilal Chaudhuri .. | 17-5 | First. |
| | 2465 | Samarendranath Ghosh | 16-4 | Second. |
| | 2466 | Biaweswar Bandyopadhyay (M) ... | 19 | First. |
| | 2467 | Jibankrishna Adhikari | 19-5 | First |
| | | **Oriental Training Academy.** | | |
| | 2470 | Jungi Pd Sinha ... | 17-2 | Second |
| | | **Sankrail Abhayacharan H. E. School.** | | |
| | 2471 | Atwar Rahman Sarder | 18 4 | First |
| | | **Cotton Institution.** | | |
| | 2472 | Samareschandra Biswas ... | 18-4 | First |
| | 2473 | Talluryvenkata Krishna Rao (H) ... | 22-1 | First. |
| | 2474 | Ayadhyaprasad Shrivastava ... ... | | First. |
| | 2475 | M. Sadanand (M) ... | 18-7 | First. |
| | 2477 | Jiwan Lal Shrivastawa | 22-8 | Second. |

| Roll. | No. | Name. | Age. | Division in which the candidate has passed. |
|---|---|---|---|---|
| | | **Cotton Institution.** | | |
| Cal. | 2478 | Baboolall Baronia ... | 19 | Second. |
| | 2482 | Tribenilal Shriwastava | 18-3 | Second. |
| | 2483 | Brijraj Singh (M) ... | 16-2 | First. |
| | 2485 | Bhuiyalal Shrivastava | 19-9 | Second. |
| | 2489 | Sheo Adhar Shukla ... | 16-3 | Third. |
| | 2490 | Hanumant Rao Bhonsle | 17-1 | Second. |
| | 2492 | Tukaram Govind Gardhani ... | 21 | First. |
| | 2494 | Chaturbhuj Agarwala | 20-1 | Second. |
| | 2497 | Dhirendrachandra Ghoshray ... | 18-2 | Second. |
| | 2498 | Santoshkumar Bandyopadhyay ... | 17 5 | Second. |
| | 2499 | Sureschandra Basu ... | 17 1 | Second. |
| | 2501 | Basantakumar Ghosh... | 18-2 | First. |
| | 2502 | Dhireschandra Sarkar... | 16-5 | First. |
| | 2503 | Subalchandra Sen ... | 18-11 | Second |
| | 2505 | Prabhatkumar Mukhopadhyay ... | 16 8 | Second. |
| | 2506 | Tarakeswar Bandyopadhyay ... | 16-1 | First |
| | 2507 | Nripendranath Mukhopadhyay ... | 20-1 | Second |
| | 2510 | A. S Halim Shah ... | 18-2 | Second |
| | 2511 | Zahidul Hussain ... | 16-7 | First. |
| | 2512 | Lala Tejnath Sahay ... | 21 | Second |
| | 2513 | Mohammed Abdul Latif (I) ... | 16-2 | First |
| | 2514 | Mohammad Zakaria ... | 18-7 | First |
| | 2517 | Taiyab Ahmad Siddiqi (I) ... | 16-7 | First |
| | 2518 | Mohd. Abdul Hameed | 20 | First |
| | 2521 | Abdul Aziz Khan ... | 16-2 | Second. |
| | 2522 | Md Yaqub Khan Azmi | 16-9 | Second. |
| | 2523 | Sikander Khan .. | 23-10 | Second |
| | 2524 | Karamat Ullah Khan | 16-7 | Second |
| | 2525 | Syed Ghulam Ali | 20-8 | Second |
| | 2527 | Syed Maiuuddin | 16-1 | Third |
| | 2528 | Ghulam Ali Khan | 16-2 | First. |
| | 2529 | Md Taha ... | 16-11 | Second |
| | 2531 | Saied Hamid | 18-3 | Second. |
| | 2532 | Syed Abidali | 17 | Second. |
| | 2533 | Syed Rahmat Ali, I | 20-8 | Second. |
| | 2534 | Abdul Jabbar Khan | 16-1 | First |
| | 2538 | Kesho Prasad (VI) | 18-4 | First |
| | 2539 | Mirza Ghulam Murtuza Beg (V) ... | 18-4 | First. |
| | 2540 | Jamilkhan Niyazee (I) | 18-4 | First |
| | 2541 | Dadabhai Khurshedji | 16 | Second |
| | 2543 | Burjor Khurshedjee ... | 19-2 | First |
| | | **Bengal Institution.** | | |
| | 2544 | Amarnath Chakrabarti (H) ... ... | 16-8 | First. |
| | 2545 | Subodhchandra Das ... | 20-1 | Second. |
| | 2546 | Kartikchandra Mukhopadhyay ... | 19-4 | First. |
| | 2547 | Subodhchandra Basu ... | 16-2 | Second |
| | 2548 | Govardhan Rao ... | 17-8 | First |
| | 2549 | Govind Laxman Sonak | 20-7 | Second |
| | 2550 | Shankar Sadashio Upasham ... | 22-8 | Second. |
| | 2551 | Kanikor Shankar Gunwant ... | 20-5 | First |
| | 2552 | Brahma Deosingh ... | 18 | Second |
| | 2553 | Gokulprasad Sharma ... | 22-10 | Second. |
| | 2554 | Ramanenisumamahesh-war Rao ... | 18-10 | Second |
| | 2556 | Ramdutta Singh ... | 16-10 | Second. |
| | 2557 | Rajaramdamajee Balwaik ... ... | 19-8 | Third. |
| | | **Calcutta Training Academy.** | | |
| | 2559 | Taranikanta Chaudhuri | 20-7 | Second. |
| | 2560 | Sudhirkumar Kundu ... | 16-2 | First. |
| | 2562 | Ramendranath Mukhopadhyay ... | 17 | Third. |
| | 2563 | Ganeschandra Mallik ... | 21-1 | Second. |

| Roll | No. | Name | Age | Division in which the candidates has passed. |
|---|---|---|---|---|
| | | **Gopalnagar Kerr M. E. School.** | | |
| Cal. | 2564 | Bibhutibhushan Chakrabarti (V) ... | 19-2 | First. |
| | *2565 | Jatindranath Chakrabarti ... .. | 18 | First |
| | *2566 | Harisadhan Ghoshchaudhuri (MLm) ... | 16-2 | First |
| | 2567 | Nagendranath Nayak | 18 7 | Second |
| | 2568 | Kanailal Bag ... | 18-8 | First. |
| | 2569 | Sudarsanchandra Bandyopadhyay ... | 18-2 | Second |
| | 2570 | Rasbihari Datta ... | 17-3 | First |
| | 2571 | Kripanath Samanta (m) | 17-1 | First. |
| | 2572 | Kanailal Bora ... | 19 | First |
| | 2573 | Satyasadhan Sinha ... | 19-1 | Second |
| | | **Maharaja Cossimbazar Polytechnic Institute.** | | |
| | 2574 | Sahilkumar Ghosh ... | 22-2 | Third. |
| | 2575 | Prabhatchandra Bandyopadhyay (M) ... | 17 6 | First |
| | 2576 | Debkinkar Rakshit ... | 16-5 | First |
| | 2577 | Makhanlal Ghosh (m) | 17-1 | First |
| | 2578 | Lalitmohan Mitra .. | 19-6 | First |
| | 2579 | Syamacharan Biswas (m) ... ... | 18-1 | First. |
| | 2580 | Bipinkrishna Sur ... | 16-10 | First |
| | 2581 | Bidhubhushan Chakrabarti (m) .. | 20 1 | First |
| | 2582 | Bijahmohan Chattopadhyay (Mm Mc) | 16 | First |
| | 2583 | Narendranath Bhaduri | 16-11 | Second |
| | 2584 | Sailes Bhaduri .. | 16 | Second |
| | 2585 | Nirmalchandra Mukhopadhyay ... | 18 1 | Second |
| | 2586 | Prabhaschandra Sarkar | 17-2 | Third |
| | 2587 | Kanailal Bandyopadhyay ... | 16-5 | Second |
| | 2588 | Surendrakrishna Chaudhuri ... ... | 18-1 | Second. |
| | 2589 | Satischandra Chakrabarti ... ... | 16-1 | Second |
| | 2590 | Karunamay Bhattacharyya ... | 19-1 | First |
| | 2591 | Jagatpati Ghosh ... | 16-5 | First |
| | 2592 | Narayanchandra Basuray ... | 17-8 | First |
| | 2593 | Panchugopal Sengupta | 17-1 | Second. |
| | 2594 | Jitendranath Adhikari (m) ... ... | 16-11 | First |
| | 2595 | Purnachandra Ghosh | 17-2 | Second |
| | | **Calcutta High School.** | | |
| | 2596 | Mahendrachandra Lahiri ... | 16-7 | Second. |
| | 2598 | Amarendranath Ghosh | 18 | First |
| | 2600 | Bireswar Mukhopadhyay ... | 18-1 | First |
| | 2603 | Sailadhan Raychaudhuri | 18-1 | Second |
| | 2605 | Niradhibari Raychaudhuri ... | 19-11 | Second |
| | 2610 | Satyakumar Gupta ... | 20-4 | Second |
| | 2611 | Tulsicharan Sarkar ... | 17-3 | First. |
| | 2612 | Bhupeschandra Sinha | 16-6 | First. |
| | 2613 | Kiranchandra Bandyopadhyay ... | 17-5 | Third. |
| | 2614 | Kosabchandra Dasnag | 17-4 | Second |
| | 2617 | Paresnath Chattopadhyay ... | 18-2 | Second. |
| | 2620 | Karalicharan Ghoshal | 19-1 | Second |
| | 2621 | Nalinbihari Das ... | 18-6 | Second. |
| | 2623 | Ramtaran Ray ... | 18-1 | Second. |
| | 2624 | Subimalchandra Ray ... | 17-6 | First |
| | 2625 | Kuriakose Devasia ... | 19-4 | Second |
| | | **Jorasankho High School.** | | |
| | 2627 | Adya Saran Lal ... | 20-4 | Second. |
| | 2630 | Chhotelal Shrivastava (H) ... ... | 21 | First |
| | 2631 | Nityagopal Ghosh (L) | 17-3 | First. |
| | | **Jorasankho High School.** | | |
| Cal. | 2632 | Titugopal Kundu ... | 19 | Third. |
| | 2633 | Nagendranath Das ... | 19-3 | Second |
| | 2634 | Murarimohan Das ... | 17-7 | First |
| | 2637 | Haripada Bandyopadhyay ... | 18-9 | First |
| | 2638 | Satyaprasanna Bhattacharyya (Ll) ... | 19-5 | First |
| | 2639 | Dulalchandra Sen (m) | 17 3 | First |
| | 2640 | Bhupendranath Ray ... | 16-4 | First |
| | 2641 | Nripendranath Datta ... | 17 | First. |
| | 2642 | Satyakinkar Goswami | 18-7 | First |
| | 2643 | Kshitiprasad Ray ... | 17 | First. |
| | 2644 | Baishnabdas Sen ... | 16-7 | First |
| | 2645 | Mihirlal Bandyopadhyay ... | 18 11 | Second |
| | *2646 | Patakicharan Mukhopadhyay (MVml) ... | 16-11 | First |
| | 2647 | Phakirchand Set .. | 16 | Second |
| | 2648 | Krishnadhan Mukhopadhyay ... | 17-7 | First |
| | 2649 | Bhushanchandra Sinha (m) ... ... | 19 8 | First |
| | 2650 | Bholanath Sarkar (m) | 17-6 | First |
| | 2651 | Panchanan Chattopadhyay (Mm) ... | 16 3 | First |
| | 2652 | Anadicharan Chattopadhyay ... | 22 3 | Second |
| | 2653 | Manoranjan Bhattacharyya ... | 16 1 | Second |
| | 2654 | Bibhutibhushan Hajra | 17-2 | Third. |
| | 2655 | Bibhutibhushan Adhikari .. ... | 20-1 | Third |
| | 2658 | Nawalkishore Das ... | 19-10 | Second. |
| | 2659 | Sudheshwar Kumar ... | 19-8 | Second |
| | 2664 | Maheshwary Narayan | 19-8 | Third |
| | 2665 | Ramasaran Singh ... | 23-8 | Second |
| | 2667 | Brahmadeo Lall ... | 1[illegible]-1 | Second |
| | 2668 | Sheonath Singh ... | 17-8 | Second |
| | 2670 | Ramautar Prasad | 20-4 | Second |
| | 2671 | Jagjiwan Prasad .. | 19-2 | First |
| | 2673 | Mahendra Shum Shere Thapa ... | 17-10 | Second |
| | 2674 | Bhupendra Sham Shere Thapa ... | 16-10 | Second |
| | 2675 | Tilak Sham Shere Thapa (m) ... | 17 9 | First. |
| | | **Calcutta Madrasa.** | | |
| | *2676 | Sultanul Islam (MLVm) | 16-2 | First |
| | 2677 | Mojibur Rahman (m) ... | 19 | First |
| | 2678 | Md Fazlul Karim ... | 16 | First |
| | 2679 | Mohamad Ashraf ... | 16-10 | First |
| | 2680 | A B Z Hasan (V) ... | 16 | First |
| | 2681 | Ahmuddin Ahmed ... | 18-7 | First |
| | 2682 | Azizul Huque ... | 19-8 | First |
| | 2683 | Gholam Mustafa ... | 17 | Second |
| | *2684 | Md Masudul Huq (MVl) ... ... | 16-2 | First |
| | 2685 | Sayeedul Hasan Siddiqi (MVm) ... | 18-11 | First |
| | 2686 | Ahsan Khan (Mm) ... | 16-5 | First |
| | 2687 | Budruddin Ahmad (Mm) | 17 | First. |
| | 2688 | Mahmood Hasan (MVm) | 16-2 | First |
| | 2689 | Md Maqbul Hussain (MVm) .. | 18-1 | First |
| | 2690 | Mohammad Amsuddin | 21-2 | First |
| | 2691 | A M Md. Azim .. | 17-6 | First |
| | 2692 | Akhter Hossain ... | 16-1 | First |
| | 2693 | Ashique Hossain ... | 16-10 | First. |
| | 2694 | Ams Ahmed Khan (V) | 18-2 | First. |
| | 2695 | Gholam Sarwar (lH) ... | 18-1 | First |
| | 2696 | Hafiz Abdul Jabbar ... | 24 | Second |
| | *2697 | Mohammad Abdus Shakoor ... | 18-4 | Second. |
| | 2698 | Mohammed Ismail ... | 21-1 | Second. |
| | 2699 | Mohammad Wasim Hossain (l) ... | 19-1 | First |
| | 2700 | Mohammad Sharif ... | 16-1 | First |

| Roll. | No. | Name. | Age. | Division in which the candidates has passed |
|---|---|---|---|---|
| | | **Calcutta Madrasa.** | | |
| Cal. | 2701 | Mohd. Yasin ... | 16-11 | First |
| | 2702 | Mohammad Junaid ... | 18 | Second |
| | 2703 | Najmuddin ... | 18 1 | First |
| | 2704 | Noyaz Ahmad Khan (IH) ... ... | 16 7 | First |
| | 2705 | Qasim Ali Ariff (VI) ... | 18 5 | First |
| | 2706 | Syed Sajid Ali (H) ... | 16 | First |
| | 2707 | Saeed Ahmad Khan ... | 18-10 | First |
| | 2708 | S Ahmadullah . | 16-5 | First |
| | 2709 | Syed Mohd. Taqi (V) ... | 16-6 | First |
| | 2710 | Syed Mohammad Qasim (V) ... ... | 17 | First |
| | 2711 | Syed Md Zahirul Hosson ... | 18-1 | First |
| | 2712 | Mohd. Amin Khan (V) | 19 11 | First |
| | 2713 | Israilur Rahman Khan | 16-5 | Second |
| | 2714 | Md Abdul Latif ... | 17-3 | Third |
| | 2716 | Abu Baker Siddique ... | 17-6 | Second |
| | 2717 | Syed Mohammad Jerjees (M) ... | 16-1 | First |
| | 2718 | Md Najmuddin (Min) | 16-1 | First |
| | 2719 | Syed Abdul Quadir ... | 18-11 | Second |
| | 2720 | Mahammed Zillur Rahaman (m) ... | 16-2 | First |
| | 2721 | Amuddin Ahmed ... | 19-9 | Second |
| | 2722 | Tas Kin Ud-Din Ahmed (MI) ... ... | 16-5 | First |
| | | **Bowbazar High School.** | | |
| | 2723 | Dayamdhi Nayak (m) | 24 | First. |
| | 2724 | Gopallal Mallik ... | 20 2 | First |
| | 2727 | Nabakumar Sil ... | 18-3 | Second |
| | 2728 | Kanailal Mukhopadhyay ... .. | 18 | Second |
| | 2729 | Dhanakuber Nag (Min) | 17 | First |
| | 2731 | Satyendranath Ghosh | 17-2 | Second |
| | 2732 | Sachindu Ghosh ... | 16-10 | Second |
| | | **Collins Institute.** | | |
| | 2741 | Cassim ... | 17-9 | First |
| | 2743 | Maung Saw Tun ... | 16-10 | First. |
| | 2745 | Maung Thein Ogh ... | 17-7 | Second |
| | 2746 | Kyaw Zawoo ... | 16 9 | First |
| | 2747 | Tha Htaw U (m) ... | 20-10 | First. |
| | 2748 | Aung Chan Tha ... | 18-5 | First |
| | 2750 | Mg Than Sein ... | 17 8 | Second |
| | 2751 | Kin Mg Latt (m G) ... | 17-4 | First |
| | 2753 | Maung Boon Tenk ... | 16-11 | Second |
| | 2754 | Tha Zan ... | 19-2 | Third |
| | 2758 | Mg Pe Khin ... | 19-2 | Second. |
| | 2760 | Mg Than . | 17 2 | Second |
| | 2761 | Mg Kaung Htin (m) ... | 18 2 | First. |
| | 2762 | Mg Tun (m) ... | 16 8 | First |
| | 2767 | Kyaw Sein ... | 19-2 | Second |
| | 2768 | Mg Aung Gyi ... | 16-4 | Second |
| | 2770 | Maung Maung ... | 19-1 | Second. |
| | 2771 | Tin Mg Latt (m) ... | 19-1 | First |
| | 2772 | M. A Mathew ... | 17-5 | First |
| | 2775 | Jagannath Prasad Garga ... | 16-8 | Second |
| | 2778 | Samarendrakumar Ray | 17-4 | Second. |
| | 2780 | Badalchand Datta ... | 19-5 | Second |
| | 2785 | Bimalkumar Ray ... | 18 4 | Second |
| | 2787 | Kalyaniprasad Ray ... | 16-8 | First. |
| | 2789 | Rasbihari Ghosh ... | 16-2 | First |
| | 2790 | Nalinbihari Chattopadhyay ... | 16-2 | First |
| | 2795 | Prabodhlal Bardhan ... | 18 2 | First. |
| | 2798 | Rajkumar Prasad ... | 17-10 | Third. |
| | 2801 | Prasannakumar Das ... | 17-5 | First |
| | 2803 | Dinendrakumar Saren... | 20-5 | Third. |
| | 2804 | Sukrickumar Mandal ... | 17-3 | Second. |
| | 2807 | Manmohan Ghosh ... | 16-2 | Second. |
| | 2808 | Kisorimohan Pan ... | 16-6 | Third |
| | 2811 | Nandan Ram ... | 17-2 | Second |

| Roll. | No. | Name. | Age. | Division in which the candidates has passed. |
|---|---|---|---|---|
| | | **Collins Institute.** | | |
| Cal. | 2812 | Haribarprasad Gupta (m) ... | 17-6 | First. |
| | 2813 | Ram Vyas Ram Gupta | 16-4 | Second |
| | 2814 | Bankey Vilas Shrivastva ... | 18-5 | Second |
| | 2818 | Ramachandra Dutta ... | 16-4 | Third |
| | 2821 | Bhagoroo Lall ... | 18-8 | Second |
| | 2822 | Vinayakrao Deokeran Chouvey ... | 18-11 | First. |
| | 2824 | Jawahirlal Gupta (L) ... | 17-8 | First. |
| | 2826 | Mahanand Sahay ... | 16-3 | Second |
| | 2827 | Haribarprasad Verma... | 18-4 | First |
| | 2828 | Dipnarayan Lal ... | 17-5 | Third |
| | 2829 | Jadunandan Sahai ... | 17-4 | Second |
| | 2830 | Jaimangal Singh ... | 16 4 | Second. |
| | 2831 | Avadhprashad Harprashad Maharaj ... | 18-5 | Second. |
| | 2832 | Ganeshprasad Singh ... | 20 | Third |
| | 2833 | Ananta Prasad ... | 16 4 | First. |
| | 2835 | Krishna Rao Ganputrao Dubey ... | 19-11 | Second. |
| | 2836 | Ramchandra Sadasheorao Raut ... | 18-4 | First |
| | 2838 | Amritlal Beharilal Potdar ... | 19 | First |
| | 2839 | Mohimaprasad Singh ... | 16-11 | Second. |
| | 2840 | Bhuneshwer Prasad ... | 17-6 | Second |
| | 2841 | Motilal Kala ... | 16-10 | Second. |
| | 2842 | Ambikacharan Shukla (M) ... | 16-8 | First. |
| | 2843 | Rajaram Laxman Kaul | 18-8 | First |
| | 2844 | Damador Trimbak Deshpande (m) ... | 32-2 | First |
| | 2845 | Vishwanath Keshinath Bhandare ... | 17-5 | First |
| | 2846 | Bhaoo Govind Umberkar (m) ... | 23-1 | First |
| | 2847 | Wasudeo Lakshman Deshpande ... | 17-6 | First |
| | 2849 | Udebhan Runjaji Malkhede ... | 21-3 | Second |
| | 2850 | Shriram Yeshwant Deshpande ... | 18-8 | Second |
| | 2851 | Laxman Bapusa ... | 20-2 | Second |
| | 2853 | Kushiraji Vyankatesh Risaldar ... | 18-8 | Second. |
| | 2855 | Bhasker Shripad Kolhatker ... | 19-2 | Second |
| | 2856 | Venkatosh Sanker Rao Vakil ... | 17-2 | Second. |
| | 2857 | Vinayak Madhaorao Dixit ... | 18-2 | Third. |
| | 2861 | Gulab Singh Laxman Singh Raghuwaunshee ... | 18-2 | Third |
| | 2862 | Kashiram Bhabut Singh Raghuwaunshee ... | 21-2 | Second. |
| | 2863 | Kashirao Bhagavanji Deshmukh ... | 21-3 | First |
| | 2864 | Kashirao Khushalrao Bhaise ... | 18-9 | Second |
| | 2865 | Narayan Bajirao Jadhao | 18-2 | Second |
| | 2866 | Gangadhar Parlhad Kolhekar ... | 20-2 | Third |
| | 2867 | Trimbak Raojee Deshmukh ... | 17-5 | Second |
| | 2868 | Vinayak Jaiwant Deshpande ... | 18-2 | Second. |
| | 2869 | Govind Trimbak Rajkarne (M) ... | 18-2 | First. |
| | 2871 | Ramrao Krishnarao Pathi ... | 20-2 | Second. |
| | 2872 | Manohor Vishnu Wagh | 23-2 | First. |
| | 2874 | Dumber Bickram Saha | 17-10 | First. |
| | 2875 | Purna Bikram Saha ... | 21-8 | Second. |
| | 2876 | Chaita Bickram Shah ... | 18-2 | Third. |
| | 2878 | Om Nersinh ... | 18-2 | Second. |

| Roll. | No. | Name. | Age. | Division in which the candidates has passed. |
|---|---|---|---|---|
| | | **Collins Institute.** | | |
| Cal. | 2879 | Vijaya Nara Singha Bahadur Rana ... | 19-2 | Third |
| | 2881 | Kaisher Bahadur K C | 16-4 | Second |
| | 2883 | Jalis Ahmad ... | 16-11 | First. |
| | 2884 | Abdul Hai ... | 19-4 | Second |
| | 2885 | Mohd Ziaul Haq ... | 16-4 | Second |
| | 2888 | Mohiuddin Ahmed ... | 16 6 | Second |
| | 2889 | Syed Iltifat Husain ... | 16-2 | First. |
| | 2890 | Pasupati Nath ... | 19-1 | Second |
| | 2891 | Krishna Prosad ... | 21-2 | Second. |
| | 2892 | Ramnatar Prasad ... | 17-4 | Second |
| | 2894 | Ahmedali... ... | 20-11 | Second |
| | 2900 | Show Nath Parsad ... | 16 5 | Third |
| | 2902 | Syed Quasim Sher ... | 16-8 | Second. |
| | 2903 | Janki Prasad ... | 17-4 | First. |
| | 2904 | Brajanandan Prasad ... | 17-6 | Second |
| | 2905 | S. A Shakoor ... | 18-7 | Second |
| | 2906 | Saiyed Akhter Hossain Chaudhry. | 18 | First |
| | 2907 | Mohammad Haroon ... | 17 4 | Third |
| | 2908 | Md Azam Warsi ... | 19-6 | First |
| | 2909 | Mohammed Mohiuddin | 19-7 | First |
| | 2912 | Mosoodul Haq ... | 17-2 | First |
| | 2915 | Chander Nath ... | 19-6 | First |
| | 2916 | Ahmed Mujtaba Alwy (VI) ... ... | 17 | First |
| | 2917 | Syed Mohammad Abdur Rab Hasani ... | 18-2 | Second |
| | 2918 | Ghulam Dustagir (I) ... | 17-4 | First |
| | 2919 | Wilayet Ahmed (V) ... | 16-10 | First |
| | 2920 | Saiyid Mohammad Hanif ... ... | 18 5 | First |
| | 2921 | S. M Abul Khair (V) ... | 16-8 | First |
| | 2924 | Syed Azher Hosain (V) | 17 4 | First |
| | 2927 | Tabarak Husain Siddiqi | 16-5 | Second |
| | 2930 | Radhey Raman Srivastava... ... | 16-6 | First |
| | 2931 | S M Rashidul Haque | 19-2 | Second. |
| | 2932 | Mohd Nurulhoda Siddiquee ... | 16-6 | First |
| | 2933 | Ayaz Ahmed Faruqi ... | 17 | First |
| | 2934 | Mirza Mohammed Hashim ... | 17-8 | Second |
| | 2935 | Wali Haider ... | 17-8 | First |
| | 2936 | Haseen Uddin Haider (V) ... ... | 17-3 | Second |
| | 2937 | Matinuddin Haider (V) | 17-3 | First |
| | 2938 | Ibtihaj Uddin Hyder ... | 16-4 | First |
| | 2939 | Shafat Ali ... | 18-8 | Second |
| | 2941 | Syed Mehdi Ali Meerza | 16 6 | Third |
| | 2942 | Syed Shabbir Husain (I) | 17-3 | First |
| | 2946 | Mohd. Yusuf (V) ... | 19-2 | First |
| | 2947 | Abdul Alim Ansari ... | 17-5 | Second. |
| | 2948 | Aliul Islam Hashmi ... | 17-2 | First. |
| | 2950 | Syed Nasir Mahdi ... | 16-11 | First |
| | 2951 | Mohd. Taiyab ... | 16-2 | First |
| | 2952 | S. Aminul Haque ... | 16-3 | First. |
| | 2955 | Syed Qamar Abbas (Qutubi) (LVI) ... | 19-8 | First. |
| | 2956 | S. Amin Ahmad ... | 16-3 | Second. |
| | 2957 | Syed Kazim Hussain Rizwi ... ... | 18-5 | Second. |
| | 2960 | Md. Sadrul Islam Khan | 16-8 | Second. |
| | 2961 | Sulaiman Molid. Khan | 17-5 | Second |
| | 2962 | Mohammad Arif ... | 16-11 | First. |
| | 2965 | Hafiz Wasat Ali Khan (H) ... ... | 17-6 | First. |
| | 2966 | Syed Abdul Hussain Moosavee ... | 16-8 | Second. |
| | 2967 | Ghulam Mohamed Khan ... ... | 18-2 | Third. |
| | 2968 | Ali Mohammad ... | 17-2 | Third. |
| | 2969 | Damoder Pershad ... | 17-2 | Second. |
| | 2970 | Saiyid Mohd. Naimuddin (V) ... | 17-9 | First |
| | 2971 | Mohamed Ali Khan ... | 16-2 | First. |
| | 2972 | Mukhtar Hossain Khan | 16-11 | Second |

| Roll. | No | Name | Age | Division in which the candidates has passed |
|---|---|---|---|---|
| | | **Collins Institute.** | | |
| Cal. | 2973 | Fazal Mohd ... | 9-2 | First |
| | 2976 | Mohd Isarul Huck . | 17-5 | First |
| | 2977 | Mahmood Alam (H) ... | 16 11 | First. |
| | 2978 | Abdul Aziz ... | 17 3 | First |
| | 2979 | Murli Dhar Lall (M L) | 16-2 | First |
| | 2980 | Ganesh Dutta Serma . . | 16-2 | Second |
| | 2982 | Ekramul Huque Khan | 16 2 | Second |
| | 2986 | Ramaprasad Gangopadhyay ... | 17-7 | Second. |
| | | **Kolia Amir Ali H. E. School.** | | |
| | 2989 | Jogendranath Sawtia .. | 18-1 | First |
| | 2990 | Phanibhushan Mandal (M) ... | 17-3 | Second |
| | 2991 | Bijaykrishna Ray ... | 19-8 | Second |
| | 2992 | Manikchandra Haldar | 20-7 | Second |
| | 2993 | Rajendranath Mati (m) | 19-1 | Second |
| | 2994 | Santoshkumar Ghorai (m) ... | 17-4 | First |
| | 2995 | Santoshkumar Mandal, II ... | 19-4 | Second |
| | 2997 | Ghanasyam Das ... | 23 1 | Second |
| | 3001 | Bibhutibhushan Chakrabarti . | 17-1 | Second |
| | 3004 | Momtazuddin Ahmad (m) ... | 19-2 | Second |
| | | **Bangabasi College School.** | | |
| | 3005 | Basudeb Bhattacharyya (Mml) . | 16 | First |
| | 3006 | Kshirodchandra Bhattacharyya (M) .. | 16 5 | First |
| | 3007 | Saktiranjan Bhattacharyya (Mml) . | 16 4 | First. |
| | 3008 | Amiyakanti Basu .. | 16-7 | First. |
| | 3009 | Bharatkumar Basu (m) | 17-1 | First |
| | 3010 | Kiranchandra Basu ... | 21-2 | First. |
| | 3011 | Nangopal Basu (M) . | 16-1 | First |
| | 3012 | Basantakumar Chakrabarti ... | 17-1 | First. |
| | 3013 | Anilchandra Das ... | 18 | Second |
| | 3014 | Bholanath Das (Mm) ... | 21-1 | First |
| | 3015 | Taraprasanna Das ... | 20-9 | First |
| | 3016 | Pranaykumar De ... | 18 1 | Second. |
| | 3017 | Syamsundar De (Mm) | 16-4 | First |
| | 3018 | Nimaicharan Datta (Mml) ... | 16-2 | First. |
| | 3019 | Dhirendrakumar Ghosh (MLMl) ... | 17 7 | First |
| | 3020 | Gobindaprasad Ghosh (Mm) ... | 17-11 | First |
| | 3021 | Pulinbihari Ghosh (M) | 17-3 | First |
| | 3022 | Kanailal Kundu (M) ... | 18 6 | First. |
| | 3023 | Nrityagopal Mitra (Mml) ... | 16-4 | First. |
| | 3024 | Dhirendranath Maitra | 16-5 | First |
| | 3025 | Pannalal Mukhopadhyay (m) ... | 16-2 | First |
| | 3026 | Sudhirkumar Nandi (Mm) ... | 17-5 | First |
| | 3027 | Dulalchand Pal (Mm)... | 16 8 | First |
| | 3028 | Haripraasad Ray (MLml) | 17-11 | First |
| | 3029 | Nirodkrishna Sarkar ... | 17-6 | First. |
| | 3030 | Amulyaratan Sen ... | 17-11 | First |
| | 3031 | Harisadhan Sengupta (Ml) ... | 16-7 | First. |
| | 3032 | Tarachand Nandi (m)... | 16 2 | First. |
| | 3033 | Kartikchandra Bandyopadhyay (M) | 17-4 | First. |
| | 3034 | Sudhirkumar Basu ... | 18-1 | Second |
| | 3035 | Sudhirkumar Das ... | 19-4 | Third. |
| | 3036 | Dulalchand De ... | 17-1 | Second. |
| | 3037 | Bholanath Datta (M) ... | 17-2 | First. |
| | 3038 | Dolgobinda Datta ... | 17 | Second. |
| | 3039 | Nripatinath Kar .. | 18 | First. |

| Roll. | No. | Name | Age. | Division in which the candidate has passed |
|---|---|---|---|---|
| | | **Bangabasi College School.** | | |
| Cal. | 3040 | Sachindranath Mitra ... | 18-1 | Third. |
| | 3041 | Dwijendramohan Mukhopadhyay ... | 19 | Second. |
| | 3043 | Sukritigopal Biswas ... | 16-2 | First. |
| | 3044 | Binayaknath Bandyopadhyay (Ml) | 16-8 | First. |
| | | **Central Collegiate School.** | | |
| | 3049 | Kalipada Bandyopadhyay ... | 16-4 | Third |
| | | **Kiddirpur Academy.** | | |
| | 3054 | Abul Bashar Khan ... | 16-1 | Third |
| | 3055 | Syed Shamsuddin (m)... | 17 5 | First |
| | 3056 | Rasbihari Mukhopadhyay ... | 17-2 | First |
| | 3057 | Tapeskumar Bandyopadhyay ... | 17-4 | First. |
| | 3058 | Dhirendranath Bandyopadhyay ... | 19-2 | First |
| | 3059 | Maheschandra Niyogi | 16-4 | First |
| | 3060 | S. K. Kayemali Ghazi | 19-8 | First. |
| | 3061 | Manindranath Pramanik ... | 17-4 | First |
| | 3062 | Manmathanath Chattopadhyay ... | 18 7 | Second |
| | 3063 | Syamchand Nandi (Mm) ... | 16 3 | First |
| | 3064 | Pratulkumar Datta ... | 16-9 | First |
| | *3065 | Maniklal Bandyopadhyay (MLml) ... | 17-5 | First |
| | 3066 | Narendranath Mandal (M) ... | 20-1 | First |
| | 3067 | Sarojnath Basu (m) ... | 16-11 | First |
| | 3068 | Ramdas Goswami ... | 16-7 | First |
| | 3069 | Bibhutibhushan Mukhopadhyay ... | 18-8 | Second |
| | 3070 | Phanibhushan Chaudhuri ... | 18-7 | Second. |
| | 3071 | Durgacharan Sinha (M) | 18-4 | First. |
| | 3072 | Kalidas Bagdi (M) ... | 18-4 | Second. |
| | 3073 | Bhabendranath Bandyopadhyay ... | 18-7 | Second |
| | 3075 | Umananda Bandyopadhyay (m) .. | 16-6 | First |
| | 3076 | Ramkamal Som ... | 17-10 | Second |
| | 3077 | Krishnakamal Som (Mm) ... | 16-3 | First |
| | 3078 | Harihar Prasad ... | 18-9 | First |
| | 3079 | Debnarayan Chakrabarti (l) ... | 16-8 | First |
| | 3080 | Satyacharan Mukhopadhyay (l) ... | 20-6 | First |
| | 3081 | Subodhchandra Raychaudhuri ... | 16-5 | First |
| | 3082 | Gaurchandra Maitra (M) ... | 16-7 | First |
| | 3083 | Prabodhchandra Chattopadhyay ... | 17-4 | Second |
| | 3084 | Anilkumar Mukhopadhyay .. | 18-11 | First. |
| | 3085 | Basantakumar Das (l) | 18-4 | First. |
| | 3086 | Gaurkisor Ghosh ... | 16 8 | Second. |
| | 3087 | Sudhirkumar Ghosh .. | 16-3 | Third |
| | 3089 | Hridayranjan Mukhopadhyay ... | 17-8 | Second. |
| | 3090 | Rankimchandra Mitra... | 19-1 | Second. |
| | 3092 | Tarapada Sinha ... | 16-4 | Third. |
| | 3093 | Brajendranath Bandyopadhyay (M) ... | 16-10 | First |
| | 3094 | Sambhuchandra Mukhopadhyay ... | 18-8 | Third |

| Roll. | No. | Name. | Age. | Division in which the candidate has passed. |
|---|---|---|---|---|
| | | **Jagadbhandhu Institution, Ballygunge.** | | |
| Cal. | 3095 | Niradgopal Ghosh ... | 17 | First. |
| | 3096 | Jnanchandra Chattopadhyay (m) ... | 16-3 | First |
| | 3097 | Narayandas Mukhopadhyay ... | 16-3 | First. |
| | 3098 | Jogesprasad Ray (M m) | 16 | First. |
| | 3100 | Narendranath Nag ... | 19-6 | Second |
| | 3101 | Santoshkumar Chattopadhyay ... | 18-5 | Second. |
| | 3102 | Praphullakumar Ray (m) ... | 16 | First |
| | 3104 | Satyendranath Chaudhuri (m) ... | 18-7 | First |
| | 3105 | Lalitmohan De (M m G) | 16-11 | First. |
| | 3106 | Lalitkumar Basu ... | 19-9 | Second. |
| | 3107 | Nagendrakumar Raychaudhuri ... | 16 | Second |
| | 3108 | Rajanikanta Pal (m) .. | 16-10 | First |
| | 3109 | Saurindranath Basu ... | 17-4 | Second |
| | 3110 | Santoshkumar Chakrabarti ... | 16-7 | Second |
| | 3111 | Praphullakumar Mukhopadhyay ... | 16 6 | Third |
| | 3112 | Bikasendu Chattopadhyay ... | 18-2 | Second |
| | 3113 | Sukumar Chaudhuri ... | 17-8 | Second |
| | 3114 | Binayendranath Lahiri | 18-11 | First |
| | | **Gabberia H. E. School.** | | |
| | 3116 | Satischandra Paik ... | 20-2 | Second. |
| | | **M. L. Jubilee Institution.** | | |
| | 3117 | Mohammed Ishaque ... | 16-6 | Second |
| | 3118 | Bindaprasad Sukul ... | 21-7 | First. |
| | 3119 | Brahma Nand ... | 19-2 | Third |
| | 3122 | Jalpaprasad Verma ... | 24-7 | Second |
| | 3123 | Dharanidhar Datta ... | 17 | Second. |
| | 3127 | Md Kismotulla Sarkar (M) ... | 20-7 | Second |
| | 3128 | Qamer Ali ... | 20-1 | First |
| | 3129 | Wahiuddin Ahmed ... | 17-5 | Second |
| | 3130 | Abdus Raquib ... | 16-4 | First |
| | 3131 | Md. Ali Syed ... | 18-1 | First |
| | 3132 | Fateh Bahadur ... | 17-4 | First |
| | 3138 | Aulad Husain ... | 18 10 | Second. |
| | 3140 | Mohammad Sarwar Ali (M V) ... | 17-7 | First |
| | 3141 | Md Yousuf (V) ... | 16-9 | Second. |
| | 3142 | Mohd. Sami Siddiqi (V) | 19-5 | Second. |
| | 3144 | Amir Ahmad Khan (M V) ... | 20-5 | First |
| | 3145 | Jalpa Sahai Sinha ... | 20 6 | Second. |
| | 3146 | Syed Hossan Shamsi ... | 19-1 | First. |
| | 3147 | Hidayat Ali Khan (V) | 18-6 | First |
| | 3148 | Mohammad Idris ... | 19-5 | First. |
| | 3149 | Syed Md., Zahooral Hassan ... | 18-11 | First. |
| | 3150 | Abdul Hameed Baig (v) | 18-6 | First. |
| | 3151 | Abdul Hamid Khan (l) | 26-4 | First |
| | 3152 | Basit Ali ... ... | 18-7 | Second. |
| | 3153 | Abdul Jabbas Khan ... | 19-4 | First |
| | 3154 | M. Aktar Hassan Syed (l) ... ... | 18-1 | First. |
| | 3155 | A. Mateen Ashraf (l) ... | 17-1 | First. |
| | 3156 | Ambika Parshad ... | 16-3 | First. |
| | 3157 | Kartar Singh ... | 16-2 | Second. |
| | 3158 | Radhaykrishna Sinha ... | 20-6 | Second. |
| | 3159 | Mahabir Sahai ... | 21-11 | Second. |
| | 3160 | George Mark Massey (V) ... ... | 32-1 | First. |
| | 3161 | Daniel Dutt ... | 23-2 | First |
| | 3162 | Mohammad Habibullah | 20 2 | First. |
| | 3163 | Minhajeddin Ahamed (M m) ... ... | 16-2 | First. |

| Roll. | No. | Name | Age | Division in which the candidate has passed |
|---|---|---|---|---|
| | | **M. L. Jubilee Institution.** | | |
| Cal. | 3164 | Abdul Haque Chowdhury ... ... | 21-5 | Second. |
| | 3165 | S. K. Nuruddin Ahmed | 17 | Second |
| | 3166 | Badruddin Ahamed ... | 16-7 | First |
| | | **Hooba Mondial H. E. School.** | | |
| | 3167 | Harendrakumar Das ... | 18-1 | First |
| | 3168 | Annadaprasad Pal (m) | 18-2 | First |
| | 3169 | Nandadulal Pramanik... | 18 1 | First |
| | 3170 | Sitansubhushan Mitra | 17-3 | First |
| | | **Badia H. E. School.** | | |
| | 3171 | Balaichandra Sarkar (M m) ... ... | 16-1 | First |
| | 3172 | Binaygopal Karmakar... | 18 2 | First |
| | 3173 | Tinkari Adhya (m) ... | 16 8 | First |
| | 3174 | Gopikrishna Sinha ... | 18-11 | First |
| | 3175 | Syamapada Palit ... | 20-1 | Second |
| | | **Amta H. E. School.** | | |
| | 3176 | Chunilal Basu .. | 16-2 | First |
| | 3178 | Gaurmohan Das ... | 21 | Third |
| | 3179 | Jugalkisor Deyashi (M m l) ... ... | 17 | First. |
| | 3180 | Nandagopal Datta .. | 18 9 | First |
| | 3181 | Prakaschandra Ghosh | 19 | Second |
| | 3182 | Chandicharan Majumdar ... ... | 17-2 | First |
| | 3183 | Nalinmohan Ray ... | 21-3 | Second |
| | 3184 | Nagendranath Samanta (M m l) ... | 17-1 | First |
| | 3185 | Jugalkisor Sarkar (M m) | 17-1 | First |
| | 3186 | Shaik Ahammudah Beg | 20 6 | First |
| | 3187 | Tulsicharan Bhattacharyya ... | 23 3 | Second |
| | 3188 | Tinkaricharan Chakrabarti ... ... | 18 | First |
| | 3190 | Amulyacharan De ... | 17-7 | First |
| | 3191 | Bankimprasad Niyogi... | 17-7 | First |
| | | **Sonakhali H. E. School.** | | |
| | 3192 | Nripendranath Mandal (M l) ... ... | 17 6 | First |
| | 3195 | Satischandra Bora ... | 17-2 | Second |
| | | **Mugkalyan H. E. School.** | | |
| | 3196 | Jogendranath Bandyopadhyay (m) | 16-2 | First |
| | | **Gobardanga H. E. School.** | | |
| | 3197 | Debiprasanna Mukhopadhyay (M l) ... | 16 | First |
| | | **New Indian School.** | | |
| | 3198 | Susilkrishna Bandyopadhyay ... | 17-4 | Second |
| | 3199 | Subodhchandra Bandyopadhyay ... | 19-2 | Second |
| | 3200 | Jatindranath Chaudhuri ... ... | 17-7 | Third |
| | 3201 | Amarendranath Datta | 18-1 | Third |
| | 3203 | Hirendralal Kar ... | 18 1 | Second |
| | 3204 | Rabindranath Khan ... | 17-1 | Second |
| | 3205 | Pyarimohan Mukhopadhyay ... | 17-8 | First |
| | 3207 | Murarimohan Ray ... | 17-7 | Third |
| | 3210 | Rabindranath Ray ... | 19-1 | Second |
| | 3211 | Kamalkrishna Datta ... | 17-1 | First |
| | 3212 | Surendralal Bhattacharyya ... | 20-9 | Second |
| | 3214 | Bishnucharan Guha ... | 16 | First |
| | 3215 | Nripendranath Gupta... | 16-5 | First |

| Roll. | No | Name. | Age | Division in which the candidate has passed |
|---|---|---|---|---|
| | | **New Indian School.** | | |
| Cal. | 3216 | Prasaddas Mukhopadhyay ... | 16-2 | First |
| | 3218 | Sachindrakumar Sinha | 16 1 | Second |
| | 3219 | Phatikchandra Das ... | 16-1 | Third |
| | 3220 | Dwijendranath Mitra | 16-1 | Second |
| | 3223 | Bimalkumar Ray ... | 16-6 | Second |
| | | **Sodepur H. E. School.** | | |
| | 3228 | Radharaman Das (M m) ... | 16-9 | First |
| | 3229 | Narendranath Chattopadhyay (V) ... | 20-1 | First |
| | 3230 | Sudhirchandra Biswas | 18-11 | First |
| | 3231 | Amilkrishna Mukhopadhyay (M V l) . | 18 | First |
| | 3232 | Pramodkumar Sain .. | 21-9 | Third |
| | 3233 | Manik Mandal .. | 16-9 | First |
| | | **Ramlal Academy, Chakdah.** | | |
| | 3234 | Nanigopal Mandal .. | 18 7 | First |
| | | **Shri Sanatan Dharma Vidyalaya.** | | |
| | 3235 | Nageshwar Prasad .. | 18 8 | Second |
| | 3239 | Mahabir Prashad .. | 18-11 | Second |
| | 3241 | Ramchandra Prasad Varma ... | 18-10 | Second |
| | 3242 | Ramnandan Prosad Singh ... | 22 4 | First |
| | 3245 | Basudeonaram Sinha | 19-1 | Second |
| | 3250 | Bhartendu Sharma . | 16 4 | Second. |
| | 3251 | Jagannath Prasad .. | 19 6 | Second |
| | 3252 | Jagadish Rai .. | 17 8 | Second |
| | 3253 | Lakshmikumar Pandey (M) ... | 20 7 | First. |
| | 3255 | Ramnath Tripathy (M m) ... | 19-11 | First |
| | 3257 | Rajkumar Roy .. | 18 1 | First |
| | 3260 | Sheoshunker Lall (M) | 16-10 | First |
| | 3261 | Ambika Prasad | 18 4 | First |
| | 3262 | Bhubaneswariprasad Verma (M) ... | 21-11 | First |
| | 3264 | Bindheswariprasad Sinha .. | 19-10 | Second |
| | 3265 | Bindeswari Prasad .. | 19 | Third |
| | 3266 | Basudeo Misra ... | 19-5 | Second |
| | 3268 | Gajadhar Somani (M L) | 17-7 | First |
| | 3270 | Jugeshwar Pershad ... | 16 | First |
| | 3271 | Kailashpati Sinha (M ) | 18-1 | First |
| | 3273 | Mahendranath Varma | 19 2 | First |
| | 3274 | Mathura Prasad Sinha | 21-8 | First |
| | 3275 | Mathura Prasad ... | 17-1 | Second |
| | 3276 | Ramavatara Singh ... | 23-1 | Second |
| | 3277 | Raghu Nath Roy ... | 20 | Second |
| | 3278 | Ramjatan Prosad (m) ... | 19 3 | First |
| | 3279 | Shatrughana Prasad Sinha ... | 19 7 | Second |
| | 3280 | Shivapujan Roy ... | 22-10 | Third |
| | 3283 | Kewal Sharma ... | 20 | Second |
| | 3285 | Gopinath Sahay ... | 17-11 | Second |
| | 3286 | Durgashankar Chaube | 18-3 | Second |
| | 3287 | Banke Bihari Rai ... | 20 6 | Third |
| | 3288 | Jagadish Narayan Sinha ... | 20 | Second |
| | 3292 | Bhagwan Prasad Upadhya ... | 16 | First |
| | 3293 | Banshidi Tripathy ... | 17-1 | Second |
| | 3295 | Badrinaram Pathak ... | 17-6 | Second |
| | 3296 | Bhagwati Ojha ... | 21-4 | Second. |
| | 3297 | Chaturbhuj Panday ... | 17-10 | Third |
| | 3298 | Chandra Datt Pant ... | 22-7 | Second |
| | 3299 | Deosaran Ram ... | 19-7 | First |
| | 3300 | Girisha Datta Upadhyaya ... | 19 8 | First. |

| Roll. | No. | Name | Age | Division in which the candidate has passed. |
|---|---|---|---|---|
| | | **Shri Sanatan Dharma Vidyalaya.** | | |
| Cal. | 3302 | Jagadish Pd. Chonbey | 17-1 | Second |
| | 3304 | Kesari Prasad ... | 20-3 | Third |
| | 3305 | Kailash Behari Sahay | 19 8 | Second |
| | 3306 | Krishnabehari Sahai ... | 18 | Third |
| | 3308 | Moolchand Sharma ... | 18-5 | First |
| | 3309 | Mahendrakumar Sinha | 19-1 | Second |
| | 3312 | Ramjibodh Sukul ... | 21-3 | Second |
| | 3313 | Ramji Sahu ... | 20 1 | Second |
| | 3315 | Rajnath Upadhyay ... | 16-3 | Second |
| | 3316 | Ram Krishna Tripathy | 17-1 | First |
| | 3318 | Ram Kumar Singh ... | 20-5 | Second |
| | 3319 | Ramavatar Sah ... | 19-4 | Second |
| | 3320 | Ramprasad Sinha ... | 19-1 | Second |
| | 3321 | Ramchandra Sahai ... | 19-3 | Third |
| | 3322 | Ram Narayan Prasad ... | 22-11 | Second |
| | 3323 | Sripatnarayan Roy ... | 16-10 | Third |
| | 3327 | Tar Kishore Narayan .. | 17-2 | First |
| | 3328 | Tejnaram Sinha ... | 19 2 | Second |
| | 3330 | Venkatesh Raman Sinha | 20 5 | Second |
| | 3331 | Hardeo Singha ... | 21-7 | First |
| | 3332 | Sitansubhushan Ghosh (m) ... | 19 | First |
| | 3333 | Bhairo Nath Khettry ... | 16 2 | First |
| | | **Oriental Training Academy.** | | |
| | 3334 | Syed Auloll Hossain ... | 23-1 | First |
| | 3335 | Md. Momul Haque ... | 22-2 | Second |
| | 3336 | Mohammad Abdus Salam ... | 17-3 | Second |
| | 3337 | S. M Mohdi Hussain... | 20-2 | Second |
| | 3338 | Abul Mozhar Md Abdul Quddoos Mallick ... | 17 5 | Second |
| | 3339 | Abul Fateh Syed Mohammad Husain | 18 1 | First |
| | 3340 | Sayed Mohammad Yousuf Berni ... | 18 7 | First |
| | 3341 | Mahmood Janudat Siddiki ... | 18 11 | First |
| | 3343 | Parmanand (Mm) ... | 19 5 | First |
| | 3344 | Panday Shamnaram Prasad ... | 21 | Second |
| | 3345 | Braj Kishore Prasad ... | 20 | Second |
| | | **Barrackpore Debiprasad H. E. School.** | | |
| | 3349 | Nityaranjan Bandyopadhyay ... | 18-4 | Second |
| | 3353 | Shaik Amanathulla ... | 19-4 | Second |
| | 3356 | Nalmindranath Chattopadhyay ... | 18-1 | First |
| | 3357 | Prabhaschandra Bandyopadhyay ... | 17 | Second |
| | *3358 | Praneshcandra Chakrabarti (MLm) | 17 11 | First |
| | *3359 | Manibhushan Sen Gupta (Mm) ... | 16 | First |
| | 3360 | Manindranath Bandyopadhyay ... | 17-4 | First |
| | 3361 | Bijaybhushan Sen Gupta ... | 18-5 | Second |
| | | **Metropolitan Institution, Bowbazar Branch.** | | |
| | 3362 | Khagendra Chandra Nath ... | 18-11 | First |
| | 3363 | Hiralal Sap (M) ... | 17-2 | First |
| | 3364 | Satyacharan Karmakar (Mml) ... | 17-1 | First |
| | 3365 | Manmathanath Majumdar (m) ... | 16-1 | First. |
| | 3366 | Praphullakumar Sen ... | 20-1 | Second |
| | 3367 | Pramathanath Chattopadhyay ... | 17-6 | First. |

| Roll. | No. | Name. | Age | Division in which the candidate has passed. |
|---|---|---|---|---|
| | | **Metropolitan Institution, Bowbazar Branch.** | | |
| Cal. | 3368 | Phatikchandra Das (Mm) | 18 1 | First |
| | 3370 | Rajendranath Guin (m) ... | 19 1 | First. |
| | 3372 | Bijaysingh Nahar (Mm) ... | 16 3 | First |
| | 3373 | Kanailal Mitra (Mm)... | 16-9 | First. |
| | 3374 | Harimohan Chattopadhyay ... | 18 6 | Second. |
| | 3375 | Mrinalkumar Bandyopadhyay (Mm) ... | 17-8 | First |
| | 3376 | Pramathanath Mitra (l) | 17-7 | First. |
| | 3377 | Gangaprasad Mitrabarman ... | 19 | Second |
| | 3378 | Atindranath Basu ... | 17-2 | Second |
| | 3385 | Taradas Basu ... | 17-8 | Second. |
| | 3386 | Susilchandra Chattopadhyay ... | 16 | Second |
| | 3387 | Susitalchandra Mitra ... | 18 | Third |
| | | **Prabodh Memorial Institution.** | | |
| | 3389 | Indubhushan Chattopadhyay (Ll) .. | 16-10 | First |
| | 3390 | Batakrishna Mitra ... | 17-10 | First |
| | 3391 | Diwijendranath Ghosh | 17-1 | Second |
| | 3393 | Jugalkrishna Das ... | 17 | Second |
| | 3394 | Saradindunath Mustaphi ... | 16-1 | Second |
| | 3395 | Sudhirchandra Kar ... | 19-2 | Third |
| | 3397 | Harihar Mukhopadhyay | 17-4 | First |
| | 3398 | Jibankrishna Dalal .. | 17 11 | Second |
| | 3400 | Nilkanta Bandyopadhyay ... | 20-6 | Second |
| | 3401 | Ganeschandra Ghosh ... | 16-1 | Second |
| | 3402 | Gaganchandra Ray ... | 17-11 | Third |
| | 3404 | Radhakanta Mukhopadhyay ... | 17-4 | First |
| | 3405 | Sudhirkumar Manna ... | 19 2 | Third |
| | 3406 | Sumantrakumar Kar ... | 20 1 | Third |
| | 3408 | Sisirkumar Gupta .. | 16-10 | Third. |
| | 3409 | Ranajitkumar Sarkar ... | 17-3 | First |
| | 3410 | Jibankrishna Ghosh ... | 19-6 | Second |
| | 3413 | Jitendranath Bhattacharyya ... | 17 1 | Second |
| | | **Harinabhi A. S. School.** | | |
| | 3414 | Ramohan Biswas ... | 16-2 | First |
| | 3415 | Kalipada Raychaudhuri (m) ... ... | 18 9 | First. |
| | 3416 | Praphullakumar Chakrabarti ... | 18-11 | First. |
| | 3417 | Sailendrakumar Chakrabarti (m) ... | 16-11 | First |
| | 3418 | Khagendranath Raychaudhuri (Mm) ... | 16-8 | First |
| | 3419 | Ramnarayan Mukhopadhyay (m) ... | 19-7 | First |
| | 3421 | Phanibhushan Lahiri ... | 19-2 | Second |
| | 3422 | Santoshkumar Bhattacharyya ... | 17-10 | Second |
| | 3423 | Nareschandra Das ... | 19-10 | Second |
| | 3424 | Charuchandra Chakrabarti ... | 18 | First |
| | 3425 | Durgapada Chakrabarti | 17-5 | First. |
| | 3426 | Dhirendranath Raychaudhuri ... | 18-6 | First. |
| | 3427 | Krishnadhan Chakrabarti (Mml) ... | 17-3 | First. |
| | 3428 | Tarapada Bhattacharyya (m) ... | 17-2 | First. |

| Roll. | No. | Name. | Age. | Division in which the candidate has passed |
|---|---|---|---|---|
| | | **Marinathi A. S. School.** | | |
| Cal. | 3429 | Satyacharan Chakrabarti. ... | 17-3 | First |
| | 3430 | Sripaticharan Bhattacharyya ... | 16-2 | First |
| | 3431 | Jatindranath Chattopadhyay ... | 20-5 | Second |
| | 3432 | Bijaykrishna Ghosh ... | 20-5 | Second |
| | 3433 | Ramsaran Chakrabarti | 18-1 | Second |
| | 3435 | Bankimchandra Chakrabarti ... | 20 7 | Second. |
| | 3436 | Kalidas Mandal ... | 20 | Second |
| | 3437 | Sachindranath Ghosh... | 20-3 | First |
| | | **Oriental Seminary** | | |
| | 3439 | Jitendranath Chakrabarti ... | 18-11 | Second |
| | 3440 | Bhabakumar Bhattacharyya ... | 17 | Second |
| | 3441 | Syamsundar Datta ... | 16-6 | First |
| | 3442 | Kalikrishna Sen .. | 16 | First |
| | *3443 | Dulalchandra Kundu (MLVml) ... | 18-10 | First |
| | 3444 | Birendranath Bhattacharyya ... | 16-5 | First |
| | 3445 | Santiranjan Chattopadhyay ... | 18-4 | Second |
| | 3446 | Harendranath Ray ... | 16-7 | First |
| | 3447 | Kanailal Ray ... | 17-5 | Second |
| | 3448 | Hirendranath Datta ... | 19-1 | Third |
| | 3449 | Haranarayan Mitra ... | 17 6 | Second |
| | 3450 | Sadhucharan Behoora | 18 | Third |
| | 3451 | Sachindrakumar Bandyopadhyay ... | 16-1 | Second |
| | 3452 | Krishnagobinda Laha | 16-6 | Second |
| | 3454 | Bijaykrishna Das ... | 17-4 | First |
| | 3455 | Lakshminarayan Datta | 18-1 | First |
| | 3456 | Sudhirchandra De ... | 19-1 | Second |
| | 3457 | Niradkumar Sil ... | 17 | Second |
| | 3458 | Kamalkumar Dhar ... | ... | Second |
| | 3459 | Lalitkumar Ray ... | 16-2 | First |
| | 3460 | Nripendrakumar Chattopadhyay (m) ... | 16 1 | First |
| | 3461 | Kanailal Datta ... | 19-4 | First |
| | 3462 | Tarapriya Bandyopadhyay ... | 16 | Second |
| | 3463 | Bhupendranath Ghosh (Mm) ... | 17 6 | First |
| | 3465 | Shibnarayan Bandyopadhyay ... | 16 | Second |
| | 3466 | Sudhindrakumar Datta chaudhuri ... | 17-2 | Second |
| | 3467 | Susilkumar Ghosh ... | 16-3 | First. |
| | 3468 | Manikial Datta (Mm) ... | 19-2 | First |
| | 3469 | Asutosh Datta (m) ... | 17-11 | First |
| | 3470 | Bijayratan Sil (M) ... | 17-11 | First |
| | 3471 | Gobindalal Basak (MMc) ... | 16 10 | First |
| | 3472 | Sachindrakumar Basu | 19-4 | Second |
| | 3473 | Bhupendranath Basak (M) ... | 16-3 | First |
| | 3474 | Dhirendranath Bhattacharyya ... | 19-1 | Second |
| | 3475 | Bhalaniprasad Ray .. | 17-2 | Second |
| | *3476 | Anilchandra De (Mm Mc) ... | 16-1 | First |
| | 3477 | Gaurgopal Ray ... | 18-3 | Second |
| | 3479 | Ramchandi Mukhopadhyay ... | 18-11 | Second |
| | 3480 | Jibankrishna Das (V)... | 17-3 | First |
| | 3482 | Rajendranath Goswami | 18 2 | First |
| | 3483 | Bankimchandra Chakrabarti ... | 19 2 | First |
| | 3484 | Bhupendranath Ray ... | 16-6 | Second |

| Roll. | No. | Name. | Age. | Division in which the candidate has passed. |
|---|---|---|---|---|
| | | **Oriental Seminary.** | | |
| Cal. | 3489 | Bikaschandra Sanyal | 16-5 | First |
| | 3490 | Manindralal Chakrabarti ... ... | 18-1 | Second |
| | 3491 | Phanigopal Chattopadhyay ... | 17 | First |
| | 3493 | Gajendranath Ghosh ... | 16-10 | First |
| | 3494 | Dwijendranath Goswami ... .. | 16-11 | Second |
| | 3495 | Ramanimohan Sarkar | 24-1 | Second |
| | 3496 | Syamkisor Seth ... | 18-3 | Third. |
| | 3497 | Aptkumar Sinha ... | 16-5 | First. |
| | 3498 | Sibprasanna Bandyopadhyay ... | 18 | First |
| | 3499 | Bijaypada Datta (M) ... | 18-1 | Second |
| | 3500 | Bisweswar Basak ... | 16-9 | First |
| | 3501 | Amarendranath Khan | 18-1 | Second |
| | 3502 | Birendranath Das (M m) | 16 | First |
| | 3503 | Atulkrishna Sen ... | 17-7 | Second. |
| | 3504 | Sudhirkumar Mukhopadhyay (M) ... | 16 7 | First. |
| | | **Kamala H. E. School.** | | |
| | 3506 | Kshitischandra Basu ... | 19-1 | Second |
| | 3508 | Haricharan Ghosh ... | 17-2 | Second |
| | 3509 | Jatindranath Putatunda ... ... | 19 1 | First |
| | 3510 | Ram Bahadur Singh ... | 23-6 | Second. |
| | 3513 | Kalikant Jha ... | 26 | Second |
| | 3514 | Markandeya Jha .. | 21-8 | Second |
| | 3516 | Brajamohan Das ... | 18-9 | Third |
| | | **Town School, Calcutta.** | | |
| | 3520 | Subodhchandra Gangopadhyay (m) | 16 1 | First. |
| | 3523 | Bibhutibhushan Pal ... | 16-1 | Third |
| | 3524 | Hrishikes Ghosh ... | 17-2 | Second |
| | 3525 | Niratan Niyogi ... | 16-1 | Second. |
| | 3526 | Ramaratan De (m) .. | 17 | First. |
| | 3528 | Dharmadas Ghoshal ... | 16-8 | Second |
| | 3529 | Sasankasekhar Basu . | 16-6 | Second |
| | 3530 | Sudhirchandra Barori | 16 3 | First. |
| | 3531 | Bimalchand Bandyopadhyay ... | 16-1 | First |
| | 3532 | Anilkumar Das ... | 16-10 | Second |
| | 3535 | Ramchandra Ghoshal | 18 2 | Second. |
| | | **Kesab Academy.** | | |
| | 3537 | Baidyanath Basak ... | 18-9 | Second |
| | 3539 | Kshetramohan Adhikari | 19 3 | Second. |
| | | **Seal's Free College.** | | |
| | 3543 | Kshirodchandra Bhattacharyya .. | 18-2 | First |
| | 3545 | Ambujaksha Koar ... | 16-4 | First |
| | 3546 | Rajendralal Mitra ... | 16-7 | Second |
| | 3548 | Hemgopal Sinha ... | 16-5 | Second |
| | 3549 | Rabindranath Basu ... | 16 10 | Second |
| | 3550 | Basantakumar Chakrabarti (Mm) ... | 16-9 | First |
| | 3551 | Sachindranath Chattopadhyay (Mm) ... | 16-6 | First |
| | 3552 | Gaurisankar Das (Mm) | 16-8 | First |
| | 3554 | Matilal Datta ... | 17-6 | First |
| | 3555 | Purnachandra Ghosh (Mm) .. ... | 16-8 | First |
| | *3556 | Tripurari Gupta (MLml) ... | 16-3 | First |
| | 3557 | Ramkrishna Kar ... | 17-2 | First |
| | 3558 | Rangalal Mahapatra ... | 20-3 | Second |
| | 3559 | Balaichand Mukhopadhyay (M) ... | 16-6 | First |
| | 3561 | Bhupendranath Ray ... | 16-6 | Second |
| | 3562 | Krishnadhan Ray (Mm) | 16-2 | First. |
| | 3563 | Damodar Sarma (M) ... | 16-8 | First. |

| Roll | No. | Name | Age | Division in which the candidate has passed |
|---|---|---|---|---|
| | | **Seal's Free College.** | | |
| Cal. | 3565 | Nahanikumar Biswas (Mm) ... ... | 17-5 | First |
| | 3566 | Purnachandra Mahapatra ... ... | 17-8 | First |
| | 3567 | Lakshmikanta Chakrabarti ... ... | 18-2 | Third |
| | 3568 | Ajitkumar Chattopadhyay ... | 16 8 | Second |
| | 3569 | Binaykrishna Haldar ... | 17-2 | Third |
| | 3570 | Kshitischandra Ghosh (m) ... ... | 16-4 | First |
| | | **Shambazar Vidyasagar School.** | | |
| | 3572 | Balaichandra Sur ... | 17 5 | Third. |
| | | **City College School.** | | |
| | 3573 | Sripatibhushan Das .. | 18 | Second |
| | | **Bagnan H. E. School.** | | |
| | 3574 | Shaikh Abdur Rahman | 18-1 | First |
| | 3575 | Sibprasad Dhara ... | 16-10 | First |
| | 3576 | Goshthabihari Kole ... | 16-7 | Second |
| | 3577 | Jugalmohan Dhary ... | 17-2 | First |
| | 3578 | Sadhanchandra Bhattacharyya ... | 16-6 | First |
| | 3579 | Bishnupada Panja ... | 20-1 | First |
| | 3580 | Satyendranath Ghosh... | 19-8 | Second |
| | 3581 | Haridas Pal ... | 16 1 | First |
| | 3582 | Madhusudan Chakrabarti ... ... | 16-10 | Second |
| | | **Oriental Training Academy.** | | |
| | 3583 | Sayid Wequar Ahmed | 19-4 | Second |
| | 3584 | Raghunandan Pershad | 18-3 | First |
| | 3585 | Rameshwer Prosad ... | 17-4 | First |
| | 3586 | Ramesher Sahay .. | 17-4 | Third. |
| | 3587 | Md Moom Raza ... | 21 | Second |
| | 3588 | Mahabir Prashad ... | 21-1 | Second |
| | 3589 | Kameshwar Prasad, II | 21-4 | First. |
| | 3590 | Jamuna Prasad, II ... | 23-3 | Second |
| | 3591 | Jadunandanprosad Verma ... ... | 19-2 | Second |
| | 3592 | Hartnandanprasad Ambasta ... | 20-4 | First |
| | 3594 | Gaya Prasad Sinha .. | 20-2 | Second |
| | 3595 | Deokinandan Prosad ... | 18-3 | Second |
| | 3597 | Alakh Deojee ... | 20 4 | Second |
| | 3598 | Syed Altaf Karim ... | 17 1 | Second |
| | 3599 | Shivadeshwari Prosad Sinha ... ... | 21-1 | Second |
| | 3600 | Shivanandan Prasad Sinha, I ... | 19-1 | Second |
| | 3601 | Syed Mohammad Abdol Rahim ... | 24 | Second |
| | 3602 | Sh Tajulmaluk ... | 16-8 | Second |
| | 3603 | Shivanandan Pershad, II ... | 17-9 | Second |
| | 3604 | Rama Prasad ... | 20-4 | Second |
| | 3607 | Md Sulaiman ... | 18 5 | First |
| | 3609 | Lala Shyama Nand Sinha ... | 17 11 | Second |
| | 3610 | Kailash Parshad ... | 18-10 | First |
| | 3611 | Kapikeo Narayan ... | 17-2 | Second |
| | [illegible] | Kamashwar Prasad Sinha ... | 18-7 | Second |
| | 3616 | Bindheshwari Prosad ... | 17-2 | Second |
| | 3617 | Zulfiqar Mohdok Khan | 18-7 | First |
| | 3618 | Syed Md Zafiruddin Ahmad ... | 21-4 | First. |
| | 3619 | Shyam Lall Saksena ... | 20-2 | First. |
| | 3621 | S. M. Sulaiman ... | 21-2 | Third. |
| | 3622 | Said Hossin ... | 18-6 | First |
| | 3623 | Syed Sami Ahmed ... | 21-2 | Second. |
| | 3624 | S M. Bashiruddin Ansari ... | 23-9 | Third. |

| Roll. | No | Name. | Age. | Division in which the candidate has passed. |
|---|---|---|---|---|
| | | **Oriental Training Academy.** | | |
| Cal. | 3625 | Narayanprasad Saksena | 19-3 | First. |
| | 3627 | Mohammad Younus ... | 21-3 | First. |
| | 3628 | Mumtaz Husain ... | 19 | Third. |
| | 3631 | Iqbal Ahmad ... | 16-2 | First |
| | 3632 | Girdher Gopal Shrivastava ... | 19-5 | First |
| | 3633 | Din Dayal ... | 18-1 | Second |
| | 3635 | Aqil Ahmad ... | 16-3 | Second. |
| | 3636 | Abdul Wahid Khan .. | 19-9 | First |
| | 3638 | Mobjel Ali Haldar ... | 16-9 | First. |
| | 3640 | Morad Ali ... | 16-6 | First. |
| | 3643 | Surendrakrishna Datta | 23 2 | Second. |
| | 3644 | Pasupati Ray ... | 17-8 | Second |
| | 3645 | Panchanan Datta ... | 16 7 | Second. |
| | 3646 | Nagendranath Sadhukhan ... | 19-9 | Second |
| | 3647 | Mahendrachandra De (m) ... | 18-1 | First |
| | 3648 | Mahimacharan Ray (m) | 18-10 | First. |
| | 3649 | Gobindakumar Kundu (Mml) .. | 18-2 | First |
| | 3650 | Chandrasekhar Chakrabarti ... | 17-6 | First. |
| | 3651 | Bankimchandra Sen Gupta ... | 16 1 | First |
| | 3652 | Brajendrakumar De (Mml) ... | 16-1 | First. |
| | 3653 | Bijayratan Sarkar (m) | 16 3 | First |
| | 3654 | Ajitsankar Raychaudhuri ... | 18-2 | Third |
| | 3655 | Panchugopal Datta ... | 16 3 | First |
| | 3656 | Jugalkisor De (m) ... | 17 | First. |
| | 3657 | Pramathanath Chattopadhyay . .. | 17-10 | Third |
| | 3659 | Manindranath Das ... | 17-2 | Third |
| | 3663 | Raghoman Sinha ... | 18 2 | Second |
| | 3665 | Ram Nandan Chanboy | 16-1 | First |
| | 3666 | Rameshwar Prasad Sinha ... | 23-1 | Third |
| | 3667 | Rajendra Prasad .. | 19-9 | First |
| | 3670 | Prabhunath Prasad Sinha ... | 22 3 | Second |
| | 3671 | Nanhoo Lal ... | 20-9 | Second |
| | 3672 | Nand Kishore ... | 18-3 | First |
| | 3673 | Nagendranarayan Sinha | 17-1 | Second |
| | 3674 | Mitranand Dvivedi ... | 22 | Second. |
| | 3677 | Krishnaballabh Sahai Verma ... | 19-8 | Second |
| | 3678 | Jugalkishore Panday | 19-1 | Third |
| | 3680 | Haribansh Kumar Sinha | 20-1 | Second. |
| | 3681 | Haribar Prasad ... | 20-1 | Third |
| | 3683 | Gauri Sanker ... | 19-1 | Second |
| | 3684 | Gauri Lal Sinha ... | 20-11 | Second. |
| | 3686 | Bindhyachal Sinha ... | 23 9 | Second. |
| | 3688 | Braj Bansi Sahaya ... | 18 3 | Second |
| | 3689 | Avadh Behari Prasad | 17 | Third |
| | 3696 | Tarakeshwar Prasad Ray (Mm) ... | 17-8 | First. |
| | 3698 | Rudranand Bahadur ... | 18-6 | Second |
| | 3699 | Ram Bahadur Prosad Sinha ... ... | 19-11 | Second |
| | 3700 | Panday Dharma Deo Narayan (Mm) ... | 20 | First |
| | 3702 | Kuldip Sahai ... | 19 8 | Second. |
| | 3703 | Hari Dass ... | 18-2 | Second |
| | 3704 | Goti Ram Patel ... | 20-8 | First |
| | 3705 | Deo Narayana Prasad Varma | 17-2 | First |
| | 3709 | Dropadi Narayan Sinha | 18-8 | Second |
| | 3710 | Bal Deo Sahai ... | 19 8 | First. |
| | 3712 | Rameshwar Dayal ... | 21 1 | Second. |
| | 3713 | Rameswar Sinha ... | 17-1 | First. |
| | 3714 | Birjmohan Rai ... | 16-11 | Second. |
| | 3715 | Rewa Shanker Shukla | 21-10 | First |
| | 3716 | Durgapada Bandyopadhyay ... | 21-6 | Third. |
| | 3717 | Sambhuchandra De (M) | 46-3 | First. |

| Roll. | No | Name | Age. | Division in which the candidate has passed. |
|---|---|---|---|---|
| | | **ental Training Academy.** | | |
| Cal. | 3719 | Kumudranjan Talukdar | 19-10 | Second |
| | 3721 | Bibhutibhushan Chattopadhyay ... | 16-2 | Second |
| | | **L. M. S. Institution, Calcutta.** | | |
| | 3722 | Indubhushan Mukhopadhyay ... (ml) ... | 16-7 | First |
| | 3723 | Susilchandra Pal (l) ... | 18-3 | First |
| | 3725 | Radharaman Manna (l) | 17-11 | First |
| | 3726 | Rabindranath Mukhopadhyay (m) ... | 16-6 | First |
| | 3727 | Manmathanath Lahiri | 19-7 | First |
| | 3728 | Lawrence J Baptist ... | 19-3 | First |
| | 3729 | Sriranjan Bandyopadhyay ... ... | 18 6 | Second |
| | 3731 | Subodhchandra Das ... | 20 | Third. |
| | 3732 | Sudhirchandra Ray ... | 17-4 | First |
| | 3733 | Bireschandra Bandyopadhyay ... | 17-1 | Second. |
| | 3735 | Santoshchandra Basu | 17-10 | Third |
| | 3736 | Narendrakumar Basu | 21-4 | Second |
| | 3738 | Shew Bilash Tewary (m) .. . | 18 4 | First |
| | 3739 | Arabindabhushan Mukhopadhyay (M) | 18-6 | First |
| | *3742 | Nareschandra Das (MLm)... ... | 18-1 | First |
| | 3743 | Prakaschandra Deb (m) | 17 8 | Second |
| | 3744 | Nirendramohan Chaudhuri ... ... | 19 4 | Third |
| | 3745 | Subodhchandra Gangopadhyay (Mm) ... | 18-3 | First |
| | 3746 | Satyendranath Basu . | 17 2 | Second |
| | 3747 | Kesablal Mitra .. | 16-1 | Second |
| | 3748 | Baridbaran Ghosh .. | 20-1 | First |
| | 3750 | Amulyachandra Ghosh (Mm) ... | 18 8 | First |
| | 3751 | Kumudprakas Bandyopadhyay ... | 19 1 | Third |
| | 3753 | Anilaksha Basu ... | 16-2 | First |
| | 3754 | Sudhirkumar Ghosh .. | 17 6 | Second |
| | 3755 | Praphullakumar Chattopadhyay (Mm) . | 16-7 | First |
| | 3757 | Surendranath Bandyopadhyay ... | 17-6 | Third |
| | 3758 | Bireswar Bandyopadhyay (M) ... | 19 2 | First |
| | 3760 | Prasadkumar Sen ... | 19 | First |
| | 3761 | Anilendranarayan Sinha ... ... | 17-7 | Second |
| | 3762 | Praphullakumar Majumdar (Ml) ... | 17 | First |
| | 3764 | Bimalchandra Mitra ... | 16 3 | First |
| | 3765 | Bhajahari Chattopadhyay ... | 18-7 | Third |
| | 3766 | Bibhutibhushan Das ... | 17-2 | Third |
| | 3767 | Tarapada De ... | 20 2 | Third. |
| | 3771 | Sibadas Datta ... | 16-11 | Third |
| | 3772 | Anilchandra Mitra ... | 19 | Second |
| | 3773 | Sachimohan Bandopadhyay ... | 19 5 | Third |
| | 3775 | Birendranath Basu ... | 19-6 | Second |
| | 3776 | Prabodhchandra Ray... | 16-11 | Second |
| | 3777 | Sailendranath Ghoshal | 17 3 | Second |
| | 3778 | Bhupendrahath Guha | 18-8 | Third |
| | 3779 | Haripada Ray ... | 18 5 | Second |
| | 3785 | Amiyamohan Raychaudhuri ... | 18-1 | Third |
| | 3787 | Nirajkumar Panday ... | 16-3 | Second |
| | 3790 | Monsidh Hemrom ... | 18-9 | Third |
| | 3792 | Mahabirpershad Nigam | 21-5 | Second. |
| | 3793 | Abdul Hai ... | 19-1 | Second. |
| | 3794 | Fakir Ibrahim Ahmed | 16-8 | First. |
| | 3795 | Babuchand Ram ... | 13 3 | Third |
| | 3796 | Shaikh Enaitullah (m) | 16-2 | First |
| | 3798 | Syed Zaker Ali ... | 17-1 | Third. |

| Roll | No | Name | Age | Division in which the candidate has passed. |
|---|---|---|---|---|
| | | **Ranaghat P. C. H. E. School.** | | |
| Cal. | 3799 | Niradranjan Goswami | 18 1 | Third |
| | 3800 | Pulinchandra Karmakar .. ... | 18 10 | First |
| | 3802 | Srikrishna Mukhopadhyay .. | 18 6 | Second |
| | 3803 | Nakari Mallik ... | 16 9 | First |
| | 3804 | Manmohan Pramanik | 18-1 | Second |
| | 3807 | Susilkumar Datta ... | 19-2 | Third |
| | 3808 | Praphullachandra Pramanik ... | 20 | Third |
| | | **Morton Institution.** | | |
| | 3809 | Rankumar Bandyopadhyay ... | 16 10 | Second |
| | 3810 | Satischandra Bhaumik (Mml) ... | 16 | First |
| | 3812 | Anilkumar Basu (m) .. | 17 1 | First |
| | 3813 | Satyendrachandra Basu | 16-1 | First |
| | 3814 | Balalal Chattopadhyay | 17 5 | Second |
| | 3815 | Niradendu Chattopadhyay (M) ... | 16-10 | First |
| | 3816 | Satischandra Das .. | 17-6 | First |
| | 3817 | Subhrausukumar Datta | 16-2 | First |
| | 3818 | Praphullakumar Gangopadhyay .. | 18 1 | Second |
| | 3819 | Haricchandra Ghosh ... | 18 1 | Second |
| | 3820 | Susilkumar Kundu . | 16-9 | Second |
| | 3821 | Praphullakumar Mitra | 17-11 | First |
| | 3822 | Jatindrakrishna Mukhopadhyay . | 17 11 | Second |
| | 3824 | Rakhalchandra Pal .. | 16-9 | First |
| | 3826 | Radhikakanta Sarkar (M) .. . | 16 | First |
| | 3827 | Pasupatinath Sil (ml)... | 16-4 | First. |
| | 3829 | Chandrasekhar Bandyopadhyay .. | 19 | First |
| | 3831 | Asutosh Mukhopadhyay ... | 19 | Second |
| | 3832 | Prabodhchandra Basu | 17 5 | First |
| | 3833 | Sachindranath Chaudhuri .. ... | 18-7 | First |
| | 3834 | Sachindra Kumar Das | 17-6 | Second |
| | 3835 | Prakaschand Ghosh (m) | 16 2 | First |
| | 3836 | Tarapada Ghosh ... | 16 1 | Second |
| | 3837 | Nagendranath Pal (M) | 17 8 | First |
| | 3838 | Bimalkumar Bagchi ... | 17 6 | Second |
| | 3839 | Haridas Basu ... | 16-2 | Second |
| | 3840 | Jnanendranath Datta ... | 17 1 | Second. |
| | 3841 | Anilkumar Guha .. | 18 | Second |
| | 3842 | Ramnarayan Maitra .. | 17-4 | First |
| | 3844 | Ganendrachandra Basu | 18-1 | First |
| | 3845 | Nirmalchandra Majumdar ... ... | 17-7 | Third |
| | 3846 | Amalendu Basu ... | 16 6 | Third |
| | 3847 | Lakshmiswar Das ... | 16-4 | Second |
| | 3848 | Manujendranath Sinha | 17 | Third |
| | 3849 | Girindranath Chaudhuri | 16-4 | Second |
| | 3850 | Kanailal Kar (l) ... | 17-5 | First |
| | 3851 | Khagendranath Kumar | 18-6 | Second |
| | 3852 | Bibhutibhushan Basu .. | 18-1 | Second |
| | 3853 | Indrachandra Basu (l)... | 17 6 | First. |
| | 3854 | Ramgati Basu (l) ... | 18-2 | Second |
| | 3856 | Jibankrishna Mitra .. | 18-1 | Second |
| | 3857 | Praphullakumar Ray (m) ... ... | 16-11 | First |
| | 3858 | Sibaprasad Tewary ... | 16 | First |
| | | **Ripon Collegiate School, Calcutta.** | | |
| | 3862 | Mahabir Prasad ... | 18-2 | Second |
| | | **Metropolitan Institution, Main.** | | |
| | 3864 | Bibhutibhushan Basu, II ... ... | 17-2 | First |
| | 3865 | Haridas Mitra, II (M) | 18 | Second |
| | 3866 | Hirendranath Datta ... | 16 2 | Third |

| Roll. | No. | Name. | Age | Division in which the candidate has passed |
|---|---|---|---|---|
| | | **Metropolitan Institution Main.** | | |
| Cal. | 3867 | Sachindrachandra Ghosh (M) ... | 16-3 | First |
| | 3868 | Bhupati Majumdar ... | 17-6 | First |
| | 3869 | Jogeschandra Chakrabarti (M) ... | 16-3 | First. |
| | 3873 | Charuchandra Hom ... | 18-5 | First |
| | 3874 | Nutbihari De ... | 16-2 | First |
| | 3875 | Bhupendranath Gangopadhyay ... | 19-6 | Third |
| | 3876 | Binaykumar Chattopadhyay (m) ... | 16-2 | First |
| | 3877 | Debnarayan Pal . | 17-1 | First |
| | 3878 | Pramathanath Bera ... | 17-7 | Second |
| | 3881 | Satindrakumar Bhattacharyya ... | 16-8 | First |
| | 3882 | Manimohan Ray (Mm) | 17-2 | First |
| | 3883 | Sibaji Ghosh ... | 16-2 | Third |
| | 3884 | Manindranath Basu ... | 16-1 | First |
| | 3886 | Anilkumar Ghosh (M m) | 16 | First. |
| | 3887 | Bibhutibhushan Basu, I | 18-8 | First |
| | 3890 | Jitendranath Mitra ... | 17-7 | First |
| | 3891 | Syamacharan De (m) ... | 16 | First |
| | 3892 | Amalendubhushan Sengupta ... | 18 | First |
| | 3894 | Sunilkrishna Ghosh .. | 17 1 | Second |
| | 3895 | Praphullachandra Mukhopadhyay ... | 16-7 | First |
| | 3896 | Brajendrakumar Chaudhuri ... | 16-11 | Second |
| | 3897 | Anilkumar Ray ... | 19-10 | Second |
| | 3898 | Amarendrakumar Mukhopadhyay (Mm) | 16-4 | First |
| | 3899 | Basantakumar Bandopadhyay ... | 18-7 | Second |
| | 3900 | Ambikacharan Datta (Mm) ... | 19-3 | First |
| | 3901 | Sisirkumar Basu (M) ... | 16-9 | First |
| | 3903 | Nitischandra Guha (Mm) ... | 16 7 | First |
| | 3904 | Kalikinkar Bhattacharyya ... | 17-3 | First |
| | 3906 | Jyotirmay Dasgupta ... | 16-2 | Third |
| | 3907 | Haridas Mitra, I ... | 17-6 | First. |
| | 3908 | Kaloharan Mitra ... | 18 | Second |
| | 3909 | Mihirchandra Datta ... | 17-1 | First |
| | 3911 | Rabindrachandra Ghosh (I) ... ... | 16-5 | First |
| | 3912 | Hirendranath Sen ... | 16-5 | First |
| | 3913 | Subodhchandra Mukhopadhyay ... | 16-2 | Second |
| | 3914 | Purnachandra Pal ... | 18-9 | Third |
| | 3915 | Narendranath Mandal | 16-2 | Second |
| | 3917 | Debendranath Mandal | 16-2 | Second |
| | 3920 | Surathnath Sen ... | 17 | Third |
| | 3921 | Chintaharan Sinha ... | 17-2 | First |
| | 3922 | Jitendranath Das ... | 19-6 | Second |
| | 3929 | Sasankasekhar Bandopadhyay ... | 17-1 | First |
| | 3930 | Nakuleswar Mukhopadhyay ... | 17-1 | Third |
| | 3933 | Krishnakisor Nandi ... | 18-1 | Second |
| | 3936 | Annadaprasad Gupta | 17 2 | Second |
| | 3940 | Taraprasad Basu ... | 17 | Second |
| | 3941 | Durgaprasad Basu ... | 16-2 | First |
| | | **Kalna Rector Governor's Institute.** | | |
| | 3943 | Ejarboksh Mallick (Mm) ... | 17-5 | First |
| | 3944 | Manikilal Sinha ... | 20-1 | Third |
| | 3945 | Phakirchandra Pramanik ... | 18-1 | First |
| | 3946 | Durgacharan Santra ... | 18 3 | First |
| | 3948 | Haradhan Hajra ... | 18 | Second. |
| | 3949 | Satchidananda Chaudhuri ... | 21-8 | Second. |
| | 3950 | Jatilchandra Hajra ... | 18-3 | First |

| Roll. | No. | Name. | Age. | Division in which the candidate has passed. |
|---|---|---|---|---|
| | | **St. Chrysostome H. School.** | | |
| Cal. | 3952 | K Narayana Bhandari | 18-5 | Second. |
| | | **Nibadhai H. E. School.** | | |
| | 3954 | Jogendranath Pal ... | 17-11 | First |
| | 3955 | Binodbihari Bhunia ... | 18 | Second |
| | 3956 | Sudhirkumar Mitra ... | 17-10 | Second |
| | 3957 | Prakaschandra Bandyopadhyay ... | 16-8 | Third. |
| | 3958 | Kalipada Mukhopadhyay ... | 16-11 | Second |
| | 3959 | Syamapada Mukhopadhyay ... | 18-2 | Second. |
| | 3960 | Indubhushan Bandyopadhyay ... | 17-3 | Third |
| | | **S. C. Institution, Udaynarayanpur.** | | |
| | 3961 | Sikarchandra Chattopadhyay ... | 18-4 | Second. |
| | | **Sanskrit Collegiate School.** | | |
| | 3964 | Panchanan Ray ... | 19-5 | First |
| | | **Sarangabad H. E. School.** | | |
| | 3965 | Prabodhchandra Mukhopadhyay (M) | 17 | First |
| | 3966 | Makhanlal Maiti (Mm) | 17-11 | First |
| | 3967 | Surathchandra Sarkar... | 17-9 | Second |
| | | **Kalipur H. E. School.** | | |
| | 3968 | Bhagyadhar Das .. | 16-4 | First |
| | 3970 | Makhanlal Rana ... | 20-3 | Third |
| | 3971 | Krishnapada Sanati ... | 19-11 | Third |
| | | **Hare School.** | | |
| | 3973 | Adharchandra Adak (Mm) ... | 17-6 | First |
| | 3974 | Jitendranath Maitra ... | 16-2 | First |
| | | **Scottish Churches Collegiate School.** | | |
| | 3975 | Nalinprakas Bandyopadhyay (M) ... | 16-6 | First |
| | 3976 | Santoshkumar Basu ... | 17-1 | First |
| | 3977 | Basantakumar Das ... | 17-2 | First |
| | 3978 | Arunchandra Basu ... | 17-2 | First |
| | 3979 | Phanindraprasad Bhaduri ... | 18 | First |
| | 3980 | Sunilchandra Datta (H) | 16 5 | First. |
| | 3981 | Jatindranath Sen ... | 16-3 | First |
| | 3982 | Sailaraj Ghosh ... | 16-1 | First. |
| | 3983 | Dharanidhar Basu (H) | 19 5 | First |
| | 3987 | Prabhatkumar Mitra ... | 16 6 | First |
| | 3988 | Bishadchandra Champati ... | 16-2 | Second |
| | 3989 | Anilkumar Ghoshal ... | 16-1 | Second. |
| | 3991 | Radhanath Mallik (M) | 16-4 | First |
| | 3992 | Rabindranath Sarkar ... | 18-3 | Second |
| | 3993 | Kalimohan Sanyal ... | 17-1 | First. |
| | 3994 | Anantakumar Biswas ... | 17-4 | Second. |
| | 3995 | Philip Rees Jones (G) | 20-2 | First |
| | 3996 | Debiprasad Ghosh ... | 20-11 | First |
| | 3997 | Prabhansukumar Gupta | 17-7 | Second |
| | 4000 | Anilkumar Das ... | 18 | Second. |
| | 4001 | Jyotibikas Mitra ... | 18-1 | Third |
| | 4002 | Haradhan Mukhopadhyay ... | 17-1 | Second. |
| | 4004 | Sunirmal Das ... | 16-11 | First |
| | 4005 | Sambhunath Ghosh ... | 16-10 | Second. |
| | 4006 | Amarkrishna Kar ... | 17-8 | Second. |
| | 4007 | Indrachandra Mallik ... | 17 9 | Second. |
| | 4009 | Asutosh Sengupta ... | 18-2 | Third |
| | 4011 | Bhubaneswar Panja ... | 20-2 | First. |

| Roll. | No. | Name. | Age. | Division in which the candidate has passed. |
|---|---|---|---|---|
| | | **Scottish Churches Collegiate School.** | | |
| Cal. | 4012 | Ardhendusekhar Acharyya (V) ... | 18-5 | First |
| | 4013 | Bimalranjan Mitra ... | 19-10 | Third |
| | 4014 | Amarendranath Basu ... | 17-2 | First |
| | 4015 | Manmathakumar Ghosh | 17-1 | Second |
| | 4016 | Rajendranath Mukhopadhyay ... | 16 2 | First |
| | 4017 | Sachindramohan Chakrabarti ... | 17-6 | First |
| | 4018 | Sisirkumar De ... | 17-3 | First |
| | 4019 | Jyotsnakanta Basu ... | 16-8 | First |
| | 4020 | Bimalkrishna Raha ... | 19 | Third |
| | 4022 | Balailal Mukhopadhyay | 16-4 | First |
| | 4024 | Amiyanath Bandyopadhyay ... | 16-3 | Second |
| | 4025 | Balaram Bandyopadhyay ... | 17-8 | Second |
| | 4026 | Sailendranath Basu . | 18 2 | Second |
| | 4027 | Nalinchandra Pain ... | 16 7 | Second |
| | 4028 | Ramendrakrishna Deb | 17-4 | Second |
| | 4029 | Syamapada Mukhopadhyay ... | 18 1 | Third |
| | *4030 | Amalendu De (M V m M c) ... | 16 5 | First |
| | 4031 | Gaurhari Ghosh (M m) | 17-1 | First. |
| | 4032 | Sitananda Ghosh (m) | 18 1 | First |
| | *4033 | Sukomalchandra Ghosh (M m M c) ... | 16 | First |
| | 4034 | Paul Kiku (m) ... | 17-3 | First |
| | *4035 | Ranajit Sinha (M m M c) ... | 16-2 | First |
| | 4036 | Sasankasekhar Bandyopadhyay (m) ... | 16-4 | First |
| | 4037 | Sachindraprasad Bhar (M m) ... | 17-1 | First |
| | 4038 | Suryyakumar Bhattacharyya (M m) ... | 17-10 | First |
| | 4039 | Ajitkumar Datta (M) . | 16-2 | First |
| | *4040 | Chandramadhab De (M L m M c) ... | 16-9 | First |
| | *4041 | Manindrachandra Laha (M V m M c) .. | 16-1 | First |
| | *4042 | Asutosh Mukhopadhyay (M L m M c) ... | 17-4 | First |
| | 4043 | Madhabendu Saha (m) | 18 2 | First |
| | 4044 | Sunilkumar Sanyal (M m) ... | 17-5 | First |
| | *4045 | Bikaschandra Sarkadhikari (M L V m M c) | 16-6 | First |
| | *4046 | Debendrabijay Ray (M V m M c) ... | 16-2 | First. |
| | 4049 | Haridas Chakrabarti (m Mc) ... | 16 | First |
| | 4050 | Jogindranath Das ... | 18-3 | First |
| | 4051 | Anilkumar Gupta (m) | 16-2 | First |
| | 4052 | Dwijendranath Gupta (Mm) ... ... | 17-6 | First. |
| | 4053 | Satyendranath Mitra (Mm) ... ... | 16 | First |
| | 4054 | Rabindranath Sen (Mm Mc) ... | 16-1 | First. |
| | 4055 | Sitansukumar Ghosh (Mm) ... ... | 17-4 | First |
| | 4056 | Amarendranath Mitra (Mm) ... ... | 16 | First |
| | 4057 | Kalidas Munshi ... | 16-4 | First |
| | 4058 | Gaganendranath Ray Chaudhuri (Vm) ... | 17-7 | First |
| | 4059 | Niranjankumar Srimani (m) ... ... | 18 2 | First. |
| | 4060 | Amiyanath Sarkar (m) | 16-1 | First. |
| | 4061 | Hiranmay Lahiri ... | 16-2 | First. |
| | 4062 | Phanindranath Sen ... | 17-4 | Second |
| | 4063 | Gaurisankar Basu ... | 16-3 | Second. |
| | 4064 | Gobindalal Set (M) ... | 16-2 | First |
| | 4065 | Rabindranath Sen Gupta (M) ... | 16-2 | First |
| | 4067 | Sureschandra De (m) | 18-5 | First |
| | *4068 | Pramodacharan Gangopadhyay (MV mH) | 16-6 | First |
| | *4069 | Bidyutkumar Palit (Mm) ... ... | 16 1 | First |
| | 4070 | Nirendrakumar Basu | 16-5 | First |
| | *4071 | Satyacharan Chakrabarti (MmH) ... | 16-9 | First |
| | 4072 | Jyotischandra Ghosh (Mm) ... .. | 16-2 | First |
| | 4073 | Binaykrishna Ray (mH) ... ... | 16-1 | First |
| | *4074 | Jagadindranarayan Sinha (MmH) ... | 16-10 | First |
| | 4075 | Sudhindranarayan Niyogi (m) .. | 16 8 | First |
| | 4076 | Sudhirchandra Das ... | 18-4 | First |
| | 4077 | Ashtamikumar Sen . | 17-5 | First |
| | 4078 | Paresnath Bandyopadhyay ... | 17-1 | Second. |
| | 4079 | Phanibhushan Sarkar | 17-8 | Second |
| | 4080 | Nirmalchandra Chakrabarti .. ... | 19 2 | Second |
| | 4081 | Manasranjan Barat .. | 17 3 | Second |
| | 4082 | Binaykrishna Bhadra | 16 5 | First |
| | 4084 | Subodhchandra Saha . | 16 | First |
| | 4085 | Kshetragopal Bandyopadhyay .. | 17 | Second |
| | *4086 | Guruprasad Ghosh (MLV ml) . | 16 | First |
| | *4087 | Kasinath Adhya (MLV ml) ... ... | 19-1 | First |
| | *4088 | Narendranarayan Ghosh (Mml) ... | 16-8 | First |
| | *4089 | Amulyakumar Mukhopadhyay (ML ml) | 17 2 | First |
| | 4090 | Benimadhab Saha (Mml) ... .. | 16-9 | First |
| | *4091 | Satischandra Sil (Mml) .. | 19-5 | First |
| | 4093 | Matilal Pan (m) . | 16-2 | First |
| | 4094 | Kamakhyaprasad Bandyopadhyay (Mm) .. .. | 17-6 | First |
| | 4095 | Birendranath Basak (m) ... ... | 16 3 | First |
| | 4096 | Rathindrakumar Das (m) ... ... | 17-6 | First |
| | 4097 | Anilkumar De (Mm) .. | 17-9 | First |
| | 4098 | Arabindaksha Hajra Chaudhuri .. | 16-3 | First |
| | 4099 | Sudhakumar Chakrabarti ... ... | 17 4 | Second |
| | 4100 | Dwijendranath De ... | 16-3 | Second |
| | 4101 | Sudhansukumar Sarkar | 16-2 | First |
| | 4102 | Bibhutibhushan Chakrabarti .. ... | 17 2 | Second |
| | 4103 | Nilkrishna Nandi ... | 17 2 | Second |
| | 4104 | Ramendranarayan Ray | 17-5 | Second |
| | 4105 | Nakulkrishna Upadhyay (Mml) ... | 17-11 | First |
| | 4107 | Balaichandra De ... | 17-3 | Third |
| | 4109 | Jnanendramohan Saha | 20 11 | First |
| | 4110 | Phanibhushan Ghosh ... | 19 1 | Third. |
| | 4113 | Jal F. Dubash ... | 16-6 | Third |
| | | **Sarisha H. E. School.** | | |
| | 4114 | Hafizuddin Gazi (Mm) | 19 | First |
| | 4115 | Pulinchandra Ainali (Mm) ... ... | 17-1 | First |
| | 4116 | Makhanlal Biswas (Ml) | 18-1 | First |
| | 4117 | Balailal Basu ... | 18 7 | First |
| | 4118 | Jitendranath Das .. | 19 | Second |
| | 4119 | Dineschandra Kahali (Mm) ... ... | 19-11 | First |
| | 4120 | Atulkrishna Mandal ... | 21 6 | Second |
| | 4121 | Kamalakanta Mandal | 19-9 | First |

| Roll | No | Name | Age | Division in which the candidate has passed. |
|---|---|---|---|---|
| | | **Sarisha H. E. School.** | | |
| Cal. | 4122 | Harisahay Mukhopadhyay ... | 18 5 | Second |
| | 4123 | Jaminikumar Pal (m) | 16 6 | First |
| | 4124 | Subodhkumar Pal (m) | 17-1 | First |
| | 4125 | Hrishikes Sinharay ... | 19 10 | Second |
| | 4126 | Sachindrakumar Desarkar ... ... | 19 7 | First |
| | 4127 | Mohinimohan Datta ... | 19 | Second |
| | 4128 | Jyotibhushan Ghosh ... | 17-10 | First |
| | | **St. Anne's Institute, Calcutta.** | | |
| | 4129 | K G Bhas ... | 19 7 | Second |
| | | **Hatuganj M. N. K. H. E. School.** | | |
| | 4130 | Farazali Bandya ... | 16-1 | Second |
| | 4131 | Md Loatfar Rohman Molla ... ... | 18-4 | First |
| | 4132 | Bhabondranath Das ... | 22-1 | First |
| | 4133 | Bibhutibhushan Mitra (m) ... ... | 16 5 | First |
| | 4134 | Md Sohelozzaman ... | 18 7 | First |
| | 4135 | Anathnath Paladhi .. | 21-2 | Second |
| | 4137 | Haranchandra Purkait (Mm) ... ... | 19 3 | First |
| | 4138 | Bipinbihari Sardar .. | 17 2 | First. |
| | 4139 | Haridhan Bhattacharya | 16 | First |
| | 4140 | Rameschandra Chakrabarti ... | 16-9 | Third |
| | 4142 | Sasibhushan Haldar ... | 17-9 | Second |
| | 4143 | Bibhutibhushan Haldar | 17-9 | First |
| | 4144 | Nandlal Saha .. | 17-3 | First |
| | 4145 | Abanimohan Sinha (M) | 17-4 | First |
| | | **Baharu H. E. School.** | | |
| | 4149 | Dhirendranath Mandal (m) ... ... | 17-2 | First |
| | 4150 | Sukumar Sen ... | 18 2 | Second |
| | 4151 | Abanikumar Chattopadhyay ... | 17-4 | First |
| | 4154 | Binaykrishna Chakrabarty (m) ... | 18-2 | First |
| | 4155 | Chandrasekar Sinha .. | 17-1 | Third |
| | 4156 | Ganeschandra Kayal ... | 18-4 | Second |
| | 4161 | Bibhutibushan Chaudhury (Mm) .. | 16 | First |
| | 4164 | Brajendranath Nandi ... | 18 1 | First |
| | | **Narit Nyayaratna Institution.** | | |
| | 4172 | Kumudeswar Gangopadhyay | 16 9 | Second |
| | 4173 | Radhanath Bhattacharyya ... | 17-2 | Second. |
| | 4174 | Kisorimohan Kole ... | 19-9 | Second |
| | 4175 | Susilkumar Chattopadhyay ... | 19 5 | First |
| | | **Bhastara J. H. E. School.** | | |
| | 4176 | Bishnucharan Ghosh (Mm) ... ... | 17 | First |
| | 4177 | Bibhutibhushan Ash .. | 19 5 | Second |
| | 4178 | Sisirkumar Bhattacharyya ... | 19 11 | Second |
| | 4179 | Krishnadhan Mitra ... | 20-5 | First |
| | 4180 | Bhupatibhushan Mukhopadhyay ... | 20 4 | First |
| | | **Guptipara H. E. School.** | | |
| | 4181 | Ghanasyam Bandyopadhyay ... | 18-2 | Second |
| | 4182 | Manmathanath Haldar | 20-2 | First. |
| | 4183 | Panchugopal Chattopadhyay (m) ... | 18-11 | First. |
| | | **Guptipara H. E. School.** | | |
| Cal. | 4184 | Sailendrakanta Mukhopadhyay ... | 18 | Second. |
| | 4185 | Anathnath Mukhopadhyay ... | 16 1 | Second. |
| | 4186 | Satyanarayan Mukhopadhyay ... | 17-2 | Second |
| | | **Irphala K. M. Institution.** | | |
| | 4187 | Bamapada Chakrabarti (m) ... ... | 16-3 | First |
| | 4188 | Haripada Chaudhuri .. | 21-4 | Second |
| | 4189 | Basudeb Rudra (M) . | 16-10 | First |
| | 4190 | Bhimchandra Chakrabarti .. .. | 17-1 | Third |
| | 4191 | Bhabataran Ghoshal | 19 3 | Third |
| | | **Dasghara H. E. school.** | | |
| | 4193 | Kalicharan Mukhopadhyay ... | 17 | First |
| | 4195 | Indrakumar Mukhopadhyay .. | 17 2 | Second |
| | 4196 | Patitpaban Biswas . | 17 6 | Second |
| | 4201 | Jitendranath Mandal ... | 16 8 | First |
| | 4202 | Prakaschandra Gupta | 20 | Second |
| | | **Kalna Maharaja's School.** | | |
| | 4203 | Brahmabandhab Bandyopadhyay (M) ... | 16 3 | First |
| | 4204 | Gopalchandra Mukhopadhyay (m) ... | 20-7 | First |
| | 4205 | Subodhchandra Chattopadhyay (Mm) .. | 16-3 | First. |
| | 4206 | Prakaschandra Chattopadhyay ... | 18 10 | First |
| | 4207 | Santoshkumar Mukhopadhyay (M) ... | 16 1 | First. |
| | 4208 | Dulalchandra Pan (M m) | 18-6 | First |
| | 4209 | Nripendranath Basumallik ... | 20-9 | Second |
| | 4211 | Amalakanta Kumar ... | 17-4 | Second |
| | 4212 | Santoshkumar Bandyopadhyay ... | 20-2 | Second. |
| | 4213 | Bagalaprasad Ghoshal | 19 | First |
| | 4214 | Abhaypada Thakur (M) | 17-6 | First |
| | 4215 | Sudhirmohan Roy ... | 20-2 | First |
| | 4216 | Sajanikanta De ... | 21 | First |
| | 4217 | Gopeswarpada Bandyopadhyay ... | 17-5 | Second |
| | 4218 | Byomkes Bandyopadhyay ... | 17-11 | Second |
| | 4219 | Rabindranath Sarkar | 18-7 | Second |
| | 4220 | Ramendranath Sarkar | 17-1 | Second |
| | 4221 | Charupada Sadhukhan | 20-11 | Third |
| | | **Sheakhala Benimadhab H. E. School.** | | |
| | 4223 | Sasanksekhar Bandyopadhyay ... | 19 11 | Second |
| | 4225 | Shaik Mahammad Latifor Rahman (M) ... | 16-1 | First |
| | 4226 | Balaicharan Chattopadhyay ... | 16-10 | Second |
| | 4227 | Dhirendranath Ghosh (Ml) ... | 16 | First |
| | 4229 | Narayanchandra Kumar | 18-8 | First |
| | 4232 | Krishnaprasad Chattopadhyay | 18 4 | Second |
| | 4233 | Sudhamay Mukhopadhyay ... | 17 9 | Third |
| | 4234 | Sukumar Chattopadhyay | 20-1 | Second. |
| | 4235 | Pasupati Modak | 18-3 | Second. |

| Roll. | No. | Name. | Age. | Division in which the candidate has passed. |
|---|---|---|---|---|
| | | **Arambagh H. E. School.** | | |
| Cal. | 4239 | Chandicharan Das ... | 19-10 | First |
| | 4240 | Indranarayan Kundu (m) ... | 16 | First |
| | 4243 | Manilal Basu (M m) ... | 17-8 | First. |
| | 4245 | Sasibhushan Pal (m) ... | 21-2 | Second |
| | 4246 | Sunilkumar Basu ... | 16-1 | Third |
| | 4248 | Nandalal Kole ... | 17-11 | Second |
| | 4249 | Sudhirkumar Ray ... | 17-1 | First |
| | | **Rashpur H. E. School.** | | |
| | 4250 | Taragati Chakrabarti | 19-2 | Second. |
| | 4252 | Basantakumar Parel ... | 21-2 | Second |
| | 4254 | Basantakumar Malik ... | 19-1 | Second. |
| | 4255 | Narendranath Majumdar ... | 19-2 | First. |
| | 4256 | Balaichandra Pramanik ... | 18-1 | Second. |
| | | **Garalgacha H. E. School.** | | |
| | 4257 | Gaurisankar Mukhopadhyay (M) ... | 17-1 | First |
| | 4258 | Rabindranath Chattopadhyay ... | 19-6 | First |
| | 4259 | Payodhinath Chattopadhyay . | 18-5 | First |
| | 4260 | Satkaricharan Mukhopadhyay (m) ... | 17-6 | First |
| | 4261 | Bhujendranath Mitra | 19-7 | First. |
| | 4262 | Mrityunjay Bandyopadhyay (H) ... | 20-2 | First. |
| | 4263 | Sudhirchandra Chakrabarti ... | 17-10 | Second. |
| | | **Barasat Government School.** | | |
| | 4264 | Kumudlal Bhattacharyya ... | 16 | First |
| | 4265 | Kumarnath Chaudhuri (Mm) ... | 16-8 | First. |
| | 4266 | Ratikanta Karmakar (M) .. | 18-1 | First |
| | 4268 | Prankrishna Chattopadhyay (V) .. | 18 | First |
| | 4269 | Anilchandra Ghosh .. | 20-1 | Second. |
| | *4270 | Durgadas Mukhopadhyay (MLIH) ... | 17-2 | First |
| | 4271 | Jibandhan Raychaudhuri ... | 18 | Second |
| | 4272 | Sarur Ahmed ... | 17-8 | First |
| | 4273 | Shaik Abdul Jabber (m) ... | 18-2 | Second. |
| | 4274 | Ahmed Hossain ... | 17-1 | Second. |
| | 4275 | Babar Ali Ahmed (Mm) | 18-8 | First |
| | 4276 | Shaikh Golam Mustafa | 18-9 | Second. |
| | 4277 | Mohammad Motadayyam ... | 16-2 | First. |
| | | **Nawabganj Sridhar Bansidhar School.** | | |
| | 4279 | Gaurmohan Das (Mm) | 18 5 | First |
| | 4280 | Goshthabihari Ghosh. | 17-4 | First. |
| | 4281 | Birendrakumar Khan (M) ... | 17 | First. |
| | 4284 | Anangamohan Marik (M) ... | 17-1 | First. |
| | *4285 | Sibaprasad Mukhopadhyay (MLml) ... | 16-10 | First |
| | 4286 | Syamapada Niyogi ... | 19-2 | First. |
| | 4287 | Mohanlal Sarkar (m) ... | 16-1 | First. |
| | 4288 | Santadas Taraphdar (M) | 16-7 | First. |
| | 4289 | Haricharan Bhanja (l) | 16 | First |
| | 4290 | Binaykrishna Basu ... | 16-2 | Second |
| | 4293 | Narenchandra Das ... | 18-4 | Third. |
| | 4294 | Bijaykrishna Manna ... | 17-6 | Second. |
| | 4298 | Nagendranath Sur ... | 18-1 | First. |

| Roll. | No. | Name. | Age | Division in which the candidate has |
|---|---|---|---|---|
| | | **Sekandarpur Rai K. P. Pal Bahadur's Free H. E. School.** | | |
| Cal. | 4299 | Sachindranath Guin ... | 20-2 | First |
| | 4300 | Harendranath Bhattacharyya ... | 16-8 | First |
| | 4301 | Manohar Bera (M) ... | 18-6 | First |
| | 4302 | Basantakumar Ghosh | 17-4 | Second |
| | 4303 | Tulsicharan De ... | 19-2 | Second |
| | 4304 | Sibnarayan Nath ... | 20 | First. |
| | 4305 | Rameschandra Pratihar .. | 20-5 | Second |
| | 4306 | Kanaibhari Kundu ... | 16-1 | First. |
| | 4307 | Makhanlal Pal ... | 16 8 | Second |
| | | **Arbalia J. V. H. E. School.** | | |
| | 4309 | Sarojranjan Lahiri | 19-6 | Third |
| | | **Maju R. N. Basu High School.** | | |
| | 4310 | Sachindranath Mandal | 17-1 | First |
| | 4311 | Gopendrakrishna Nandi | 16-11 | First |
| | 4312 | Haribar Bej (M) ... | 16-1 | First |
| | 4313 | Jugalkisor Chattopadhyay (Mm) ... | 17-3 | First |
| | 4314 | Tulsicharan Bandyopadhyay .. | 18-1 | Second |
| | 4315 | Amarendranath Bhattacharyya .. | 21-3 | Second |
| | 4316 | Amulyaratan Mukhopadhyay ... | 18 6 | Second. |
| | 4317 | Sibaram Bhattacharyya | 17 2 | First. |
| | 4318 | Debendranath Bhuya | 21-8 | Second |
| | 4319 | Gangadhar De .. | 19 5 | First |
| | 4320 | Chandrakisor Dhara ... | 17-2 | Third |
| | 4321 | Satyacharan Karmakar | 17-6 | Second |
| | 4322 | Muhammud Ibrahim Middya .. | 21-10 | First. |
| | 4323 | Sayed Kamrul Hoque .. | 17 2 | First |
| | | **Gar Bhawanipur H. E. School.** | | |
| | 4324 | Badalchandra Dhara ... | 17 4 | First |
| | 4325 | Anandamohan Marik ... | 21-10 | Second |
| | 4326 | Amarendrasundar Chaudhuri ... | 17-7 | First |
| | 4327 | Panchanan Chakrabarti | 19-9 | Second |
| | 4328 | Lalitmohan Chakrabarti | 16-6 | Second |
| | 4330 | Kisormohan Karati (Mm) ... | 21-11 | First. |
| | 4331 | Bhajahari Dhara ... | 18-11 | Second |
| | 4332 | Nanigopal Mukhopadhyay ... | 18 1 | Second |
| | | **Sibganja Bishalakshmi H. E. School.** | | |
| | 4333 | Kalipada Bishayi .. | 18-11 | First |
| | 4334 | Nandagopal Adhikari .. | 16-10 | First |
| | 4336 | Kisormohan Bera ... | 18-6 | Second |
| | 4337 | Krishnapada Mandal ... | 20-1 | First. |
| | 4339 | Sudhirchandra Adhikari | 17-2 | Second. |
| | | **Haripal Gurudayal Institution.** | | |
| | 4340 | Abanibhushan Bandyopadhyay ... | 16-10 | First |
| | | **Mahisadal Raj H. E. School.** | | |
| | 4343 | Nalinikanta Ghosh ... | 20 | First |
| | 4344 | Madhusudan Maiti (M) | 17 5 | First. |
| | 4345 | Nibaranchandra Uthasani (m) ... | 22-11 | First |
| | 4346 | Dharanidhar De (m) ... | 22-6 | First. |
| | 4347 | Satischandra Kuiti ... | 18-8 | Second |
| | 4349 | Charuchandra Acharyya | 18 3 | First |
| | 4351 | Manibhushan Das ... | 19-1 | First. |
| | 4352 | Bijaykrishna Basu ... | 17 | First |
| | 4353 | Sasibhushan Maiti ... | 19-6 | First. |

| Roll. | No. | Name. | Age. | Division in which the candidate has passed. |
|---|---|---|---|---|
| | | **Ray Sunakar Bharat Ch. Institution.** | | |
| Cal. | 4354 | Sindhupada Samui (m) | 19 | First |
| | 4355 | Gobindachandra Manna (m) ... | 19-11 | First |
| | 4356 | Tripurakanta Bhattacharyya (Ml) ... | 17-10 | First. |
| | 4357 | Becharam Chaudhuri ... | 18-8 | Second |
| | 4359 | Sudhirchandra Khan (M) ... | 17-8 | First. |
| | | **Bhandarhati B. M. Institution.** | | |
| | 4360 | Haripada Sinha (m) ... | 18 3 | First |
| | 4361 | Shaik Rashed Bakash Mondal ... | 19 | First |
| | 4362 | Jibankrishna Ghosh (Mm) .. | 18-5 | First |
| | 4363 | Subodhchandra Kar .. | 16-4 | Second |
| | 4364 | Satischandra Adhya ... | 17-7 | Second. |
| | 4365 | Bhupendranath Sinharay ... | 18 | Second |
| | 4366 | Mohitkumar Mukhopadhyay ... | 17-9 | Second |
| | | **Khanakul Krishnagar Jnanendra Institution.** | | |
| | 4373 | Sudhirkrishna Batabyal | 16-2 | Second. |
| | | **Santipur Municipal School.** | | |
| | 4375 | Niradkumar Lahiri (ml) | 16 | First |
| | 4376 | Kirannarayan Mukhopadhyay ... | 16 | First. |
| | 4380 | Balaichandra Saha ... | 16-6 | First. |
| | 4381 | Raghunath Mukhopadhyay ... | 16-8 | Second |
| | 4382 | Sudhirkumar Chattopadhyay ... | 17-8 | Second. |
| | 4383 | Bimalkumar Sanyal ... | 16 | Second |
| | 4385 | Rakhalchandra De (m) | 16-2 | First. |
| | 4386 | Pramodkumar Lahiri(m) | 17 | First |
| | 4387 | Nanigopal Basu ... | 17 | Second |
| | 4388 | Paresnath Bhanja ... | 16-1 | Second. |
| | 4389 | Phanindranath Mukhopadhyay ... | 16 | Second |
| | 4390 | Sudhirkumar Mukhopadhyay ... | 18 | Second |
| | 4391 | Amritalal Pal ... | 20-4 | Second |
| | 4392 | Praphullakumar Bandopadhyay ... | 16-1 | Second |
| | 4393 | Sudhirkumar Ray, II... | 19-2 | Second |
| | 4394 | Balaram Kashtya .. | 18-1 | Second |
| | 4396 | Santoshkumar Bagchi | 17-5 | Second |
| | 4398 | Bijaykumar Sengupta | 20-5 | Second. |
| | 4399 | Nirmalchandra Bhattacharyya ... | 17-7 | Third. |
| | 4408 | Gaurchandra Sen ... | 20 | Second. |
| | 4409 | Bijaykumar Dasghosh | 21-11 | Second |
| | 4410 | Sanjitkumar Mukhopadhyay ... | 16-10 | Second. |
| | 4411 | Satkari Shi ... | 18-8 | Second. |
| | | **Udaynarayanpur S. G. Institution.** | | |
| | 4415 | Chandiram Gangopadhyay (m l) ... | 18-11 | First |
| | 4416 | Basudeb Chakrabarti ... | 16-1 | First. |
| | 4417 | Nityaranjan Ghoshal (M m) ... | 16-2 | First. |
| | 4418 | Pratulchandra Ghoshal | 17-9 | First. |
| | 4419 | Pasupati Laha ... | 19-11 | Second. |
| | 4421 | Nitaicharan Khan ... | 19-1 | Second. |
| | 4422 | Gobardhandhari Chakrabarti ... | 21-10 | Third. |
| | | **Karanjali H. E. School.** | | |
| Cal. | 4423 | Aswinikumar Tanti ... | 18-1 | Second. |
| | 4424 | Dibakar Chakrabarti ... | 21 | Second. |
| | 4425 | Jatindranath Mandal ... | 17-10 | First. |
| | 4427 | Harendrakumar Manna | 19-5 | First. |
| | 4428 | Nrityagopal Mandal (M) | 19 | First. |
| | | **Nandigram Carmichael Institution.** | | |
| | 4431 | Gunadhar Giri ... | 17-9 | Second. |
| | 4432 | Shaik Golam Mobarak (M m) ... | 17 4 | First |
| | 4433 | Banchanidhi Pahari ... | 18-6 | First. |
| | 4434 | Gunadhar Maiti (m) ... | 17-2 | First. |
| | 4435 | Bipinbihari Jana ... | 20 | Second |
| | *4436 | Bimalchandra Ghoshal (Ml) ... | 16-2 | First. |
| | 4437 | Bhutnath Maiti ... | 18 9 | Second. |
| | 4438 | Bhagabatchandra Pradhan ... | 19-7 | Second. |
| | 4440 | Krishnakali Misra ... | 19-6 | Second |
| | 4441 | Shaik Mokbul Mahummad ... ... | 17-8 | Second |
| | | **Raghunathbari R. T. H. E. School.** | | |
| | 4442 | Bhubanchandra Maiti | 17 | First |
| | 4443 | Kalidas Bhattacharyya | 18-1 | First. |
| | 4444 | Raghunath Maiti (Mm) | 16-6 | First. |
| | 4445 | Krishnachandra Bera ... | 20-1 | Second |
| | 4447 | Rakhalchandra Maiti (m) ... ... | 20-10 | First. |
| | 4449 | Sripaticharan Maiti (m) | 18-6 | First |
| | 4450 | Hrishikes Adhikari (m) | 16-2 | First. |
| | | **Mitra Institution, Calcutta.** | | |
| | 4458 | Pikuram Sen ... | 18-9 | First. |
| | | **Hindu School, Calcutta.** | | |
| | 4459 | Rabindranath Datta ... | 16-9 | Second. |
| | | **S. V. S. Vidyalaya.** | | |
| | 4460 | Somnath Barman ... | 18-4 | First. |
| | 4461 | Premratan Kothary (M) | 18-1 | First. |
| | 4462 | Mahendramohan Dube | 16-6 | First. |
| | 4463 | Mahram Poddar ... | 16-8 | Second. |
| | 4466 | Ram Bahadur Singh (Mm) ... ... | 19-11 | First. |
| | 4467 | Muneswar Singh (M) ... | ... | First. |
| | 4468 | Ram Nagmalall ... | 18-7 | Second |
| | 4469 | Sahdeo Singh ... | 18 | First. |
| | 4470 | Sekharchandra Seraogi (Mm) ... ... | 16-2 | First. |
| | *4472 | Motiratan Bhattar (MLVml) ... | 17-2 | First. |
| | 4473 | Ramdhani Panday ... | 18-2 | Second |
| | 4474 | Bidyabhushan Agrawal | 16-4 | First. |
| | 4475 | Surajnath Pandey ... | 16-4 | First. |
| | 4476 | Shreenarayan Dudwania (Mm) ... ... | 17-7 | First. |
| | 4477 | Jogendranath Verma | 16-8 | First. |
| | 4478 | Kapildeo Panday ... | 16-5 | Second. |
| | 4480 | Haridamodar Dhulekar | 17-1 | First. |
| | 4481 | Ghasilal Jaipuria (m) | 17-8 | First. |
| | 4482 | Nawalkishoreprasad Verma ... ... | ... | Second. |
| | 4483 | Radhakrishna Kothari | 16-10 | First |
| | 4484 | Jewandas Behani (M) | 16-4 | First. |
| | 4485 | Brajamohan Prasada | 19-2 | First. |
| | 4486 | Bhuneshwar Pandey ... | 17 | First. |
| | 4487 | Shiwdanmull Daga ... | 19-9 | First. |
| | 4488 | Satanand Lala ... | 17-11 | Second. |
| | 4489 | Phulchand Johari ... | 17-2 | Third. |

| Roll. | No. | Name. | Age. | Division in which the candidate has passed. |
|---|---|---|---|---|
| | | **S. V. S. Vidyalaya.** | | |
| Cal. | 4490 | Lallooial Agarwala ... | 18-10 | Second. |
| | 4491 | Jagnarayan Singha ... | 20-6 | Second. |
| | 4493 | Radhakrishan Panday ... ... | 19-8 | Third |
| | 4494 | Jhungarlal Vyas ... | 19-7 | Third |
| | 4495 | Mahadeo Lal Kedia ... | 16-3 | First |
| | 4496 | Banarsiprasad Kedia (MLl) ... ... | 16 | First |
| | 4497 | Basudeo Tiwari ... | 18-8 | Second |
| | 4498 | Ramachandra Pathak (Ll) ... ... | 17-1 | First. |
| | 4499 | Mohanlal Bengani | 16 7 | First. |
| | 4500 | Chaudmal Kasliwal ... | 16-6 | Second. |
| | 4501 | Nageshwar Jha ... | 19-5 | First |
| | 4502 | Ramchandra Wasudeo Pathye ... | 23-10 | Second. |
| | 4503 | Shankar Banaji Thombare ... ... | 21-7 | First |
| | 4504 | Punyadhar Mishra ... | 22-11 | Second. |
| | 4505 | Gangadhar Jha .. | ... | Second. |
| | 4506 | Mohanlal Dungersee (Vm) ... ... | 17 6 | First |
| | | **Bengal Institution.** | | |
| | 4508 | Budhram Sonar ... | 22-7 | Second |
| | 4509 | Jhummaklal Tamer ... | 22 8 | First. |
| | 4512 | K. K Bhure ... | 17-11 | Second |
| | 4513 | Shankersitaram Dani ... | 18-8 | Third |
| | 4514 | Nilkanth Ramrao Raout ... ... | 18 6 | Second. |
| | 4515 | Pandurang Ramji Faye | 20 | Second |
| | 4518 | Niharkumar Mukhopadhyay ... | 18-3 | Third |
| | 4520 | Prithwisranjan Mukhopadhyay ... | 19 | Second |
| | | **Asadtalla C. M. H. E. School.** | | |
| | 4522 | Pramatharanjan Khatua | 18-5 | Second |
| | 4523 | Gopalchandra Manna (Mml) ... ... | 17-2 | First |
| | 4524 | Sudhirranjan Khatua | 17-11 | Second |
| | 4525 | Gaurhari Bera (m) ... | 17-10 | First. |
| | 4526 | Sukdeb Maiti ... | 20-2 | Second |
| | 4528 | Jadabchandra Mandal (m) ... ... | 17-1 | First. |
| | 4529 | Upendranath Giri ... | 19-9 | First |
| | 4530 | Satyendranath Mallik | 18 2 | Second |
| | 4531 | Bankimchandra Sahu | 20-6 | Second. |
| | 4533 | Biharibhushan Santra | 17-11 | First |
| | | **Udaynarayanpur S. C. Institution.** | | |
| | 4535 | Krishnamohan Pal ... | 17-11 | First |
| | | **Basanti Bijay High School, Ikra.** | | |
| | 4543 | Gaurisankar Chattopadhyay (m) ... | 17-2 | First |
| | 4544 | Balaram Sadhu ... | 18-10 | First. |
| | 4545 | Guruprasanna Mukhopadhyay ... | 18-4 | Second |
| | 4552 | Ramsankar Bandyopadhyay ... | 18-6 | Third. |
| | 4554 | Jogendranath Chattopadhyay (Mm) ... | 18-5 | First. |
| | 4558 | Praphullakumar Bandyopadhyay ... | 18-6 | First. |
| | 4559 | Tinkari Chattopadhyay | 18-6 | Third |
| | 4562 | Hrishikes Mandal ... | 19 | Second |
| | | **Oriental Training Academy.** | | |
| | 4566 | S. A. Rasheed ... | 21 6 | Second. |
| | 4568 | Jaimangalprasad Sinha | 19-6 | Second. |

| Roll. | No | Name. | Age. | Division in which the candidate has passed. |
|---|---|---|---|---|
| | | **Aryya Mission Institution.** | | |
| Cal. | 4575 | Jatindranath Mukhopadhyay (m) ... | 17-4 | First |
| | | **Khalatchandra Calcutta Institution.** | | |
| | 4576 | S Mohammad Saheb ... | 18-5 | Second. |
| | 4577 | Sayed Ahmad Saheb | 17-5 | Third |
| | | **Ripon Collegiate School, Calcutta.** | | |
| | 4580 | Ramanimohan Chattopadhyay ... | 16 1 | Second. |
| | | **Sir Ramee Institution, Bishnupur.** | | |
| | 4584 | Rasbihari Chakrabarti | 18 | Second |
| | 4585 | Jasimoddin Mondol . | 16 4 | Second |
| | 4586 | Manindranath Chattopadhyay ... | 19-2 | Second. |
| | 4587 | Bhabanikumar Ghosh (Mm) ... .. | 18-2 | First |
| | 4588 | Balaram Karmakar ... | 20 6 | First |
| | 4589 | Hariprasad Mitra ... | 18-2 | Second. |
| | | **Rani Bhabani School.** | | |
| | 4590 | Jatindranath Ghosh ... | 18-9 | Second. |
| | | **Prabodh Memorial Institution.** | | |
| | 4594 | Bibhutibhushan Dasgupta ... | 21-2 | Third |
| | | **Saraswat Kshatriya Vidyalay.** | | |
| | 4596 | Lakshminarayan Misra | 17 | Second |
| | 4597 | Mohanlal Kshetry ... | 20-7 | Second |
| | | **Bengal Institution.** | | |
| | 4600 | Sunderlal Bhaiyalal ... | 19-8 | First. |
| | 4601 | Manohergovind Rao Sir Deshpande ... | 20-8 | Second. |
| | 4602 | Indrachur Ghosh ... | 19-1 | Third |
| | | **Parbatipur Patit Pabani H. E. School.** | | |
| | 4604 | Baneswar Patra (M Lml) ... | 17 3 | First. |
| | 4605 | Arjunchandra Mandal | 18-1 | First |
| | 4606 | Gunamani Hajra .. | 25 6 | Second. |
| | 4607 | Baibhari Maiti ... | 18 | Second |
| | 4608 | Jibankrishna Barik ... | 19-1 | Second. |
| | | **Collins Institute.** | | |
| | 4612 | Girischandra Bidyabinod ... ... | 24-7 | Second. |
| | 4613 | Lakshmiranjan Josse (H) ... ... | 20-6 | First. |
| | | **Central Collegiate School.** | | |
| | 4614 | Gopendranath Mitra (Mm) ... | 16-2 | First |
| | | **Jorasanko High School.** | | |
| | 4615 | Karalicharan Bandyopadhyay (M) ... | 17 | First. |
| | 4619 | Abhayapada Basumallik ... | 16 9 | First |
| | 4620 | Baidyanath Biswas ... | 19-1 | Second |
| | 4621 | Dasarathi Bandyopadhyay ... | 16-3 | Second. |

| Roll. | No. | Name. | Age. | Division in which the candidate has passed. |
|---|---|---|---|---|
| | | **Jorasanko High School.** | | |
| Cal. | 4624 | Yoganand Jha ... | 22-8 | First. |
| | 4625 | Biswanath Jha ... | 22-8 | Second |
| | 4627 | Raunibhari Singh ... | 19 | Second |
| | 4630 | Shardakanta Sukul ... | 20-4 | First |
| | 4631 | Mohammad Ishaque Khan .. | 18-8 | Second |
| | 4633 | Rajendraprasad Tewary | 19-2 | Second |
| | 4634 | Jagendranarain Varma | 17 | First. |
| | 4635 | Hira Ray .. | 19-4 | First |
| | 4637 | Badri Prasad ... | 16-3 | First. |
| | 4638 | Ayodhya Mishra ... | 23-2 | Second. |
| | 4639 | Bikramaditya Singh ... | 23-10 | Second |
| | 4641 | Narayanprasad Kashyapa ... | 20-1 | Second. |
| | 4642 | Pramodranjan Chaudhuri ... | 17 | Second. |
| | 4644 | Indranarayan Chandra | 17-7 | First |
| | 4646 | R Sunder Mohan Lall | 19 | Second. |
| | 4647 | Ganesh Prasad ... | 19-1 | Second |
| | 4649 | Raiz Umar ... | 18 1 | Second |
| | 4650 | Mohammed Idris ... | 18-8 | Second |
| | 4654 | Md Isahaque ... | 19 | Second |
| | 4655 | Miyan Khan ... | 18-7 | Second |
| | 4656 | Mahmooduzzaman Beg (V) ... | 18-11 | First. |
| | 4657 | Md Bashir Khan ... | 23-3 | First. |
| | 4658 | Mahammad Lateef Khan ... | 17-7 | Second |
| | 4660 | Mohammad Anamul Haque ... | 17-1 | Second |
| | 4661 | Asghar Husain (V) ... | 16-7 | Second. |
| | 4662 | Mohammad Isa ... | 23-1 | First |
| | 4664 | Mohd. Jamil Ahmad Khan (V) ... | 17 | Second |
| | 4665 | Tajammul Hossain ... | 17 3 | Second. |
| | 4667 | Babuaylal Mahto ... | 19 | First |
| | 4668 | Gangaprasad Sinha ... | 22 6 | Second |
| | 4669 | Md Abdul Nayeem Khan ... | 18-11 | Second |
| | 4670 | Syed Wahidul Haque | 16 3 | Third |
| | 4673 | Mohammad Rafiquo ... | 17-1 | Second |
| | 4674 | S. Shyamsunder Prasad | 20 2 | Second. |
| | 4675 | Chundermohan Lall ... | 17 | Second. |
| | 4676 | Bankeybihari Sahai ... | 18-3 | First |
| | 4678 | Abdus Shakur Khan ... | 19-11 | First. |
| | 4679 | Bhagwati Prasad Srivastava ... | 21-5 | First |
| | 4680 | Raj Kumar Sinha ... | 22-7 | First. |
| | 4681 | Bhagirath Prasad Sinha | 22-5 | Second |
| | 4682 | Nageshwar Jha ... | 16-5 | Second |
| | 4684 | Sayedah Jawad Zaidi | 19-7 | Second. |
| | 4686 | Mohammod Mohiuddin ... | 25-11 | Second |
| | 4688 | Rameschandera ... | 22-10 | Second |
| | 4689 | Govindbeharilal Kharo (V) ... | 22-10 | First |
| | 4690 | Abdul Hameed ... | 17-5 | First |
| | 4691 | Mohammed Husain (MI) ... | 18-4 | First |
| | 4692 | Balbhadra Jha ... | 17-9 | Second. |
| | | **Janki Training School.** | | |
| | 4693 | Jaydebkumar Mitra ... | 21-1 | Third. |
| | | **Sri Sanatan Dharma Vidyalaya.** | | |
| | 4694 | Jagnarain Tewari ... | 17-8 | First. |
| | | **Taltala High School.** | | |
| | 4698 | Mohammed Fareeduddin Hyder ... | 20-4 | Second. |
| | | **Barasat Govt. School.** | | |
| | 4699 | Bibhatarn Haldar ... | 17-1 | Third. |

| Roll. | No. | Name. | Age. | Division in which the candidate has passed. |
|---|---|---|---|---|
| | | **Oriental Seminary.** | | |
| Cal. | 4700 | Nalinimohan Bandyopadhyay ... | 16-4 | Second. |
| | | **Collins Institute.** | | |
| | 4701 | Hiralal Kanhyalal Panjare ... | 22-6 | Third |
| | | **L. M. S. Institute.** | | |
| | 4703 | Batakrishna Biswas ... | 18-1 | Second |
| | | **S. V. S. Vidyalaya.** | | |
| | 4704 | Brijbanshi Jha ... | 19 | Second. |
| | | **Hindu School.** | | |
| | 4705 | Amiyakumar Ghosh (Min) ... | 16-1 | First |
| | | **Seal's Free College.** | | |
| | *4707 | Rameschahdra Mitra (ML ml) ... | 16-2 | First |
| | 4711 | Ajitkumar Ray ... | 16-5 | Third |
| | | **Kamala High School.** | | |
| | 4712 | Krishnabiharilal Agarwal (m) ... | 16-8 | First. |
| | | **Kukutia K. K. Institution.** | | |
| | 4715 | Rukminikanta Sarkar .. | 21-1 | Second. |
| | | **Oriental Training Academy.** | | |
| | 4717 | Lakshminarayan Mehta | 31 | First |
| | 4718 | Ramadhin Sinha ... | 20-3 | Second |
| | | **Jorasanko H. E. School.** | | |
| | 4719 | Deoraj Sinha ... | 23 9 | Second. |
| | 4721 | Syed Musharraf Hussain ... | 16-10 | Second. |
| | 4722 | Syed Mohsin Raza Rizvi ... | 16-1 | Second. |
| | 4723 | Soney Lall Jha ... | 19-11 | Second |
| | 4724 | Shaheryar Mirza ... | 17-6 | First |
| | 4725 | Sadigah Khan ... | 20-5 | Second. |
| | 4726 | Harnandan Prasad Sinha ... | 21 | Second. |
| | 4727 | Mahboob Karan ... | 20 6 | Second. |
| | 4728 | Sayyid Unis Riza Rizvi | 22-6 | First. |
| | 4729 | Syed Mohammad Husain Rizvi (V) ... | 23-4 | First. |
| | | **M. L. Jubilee Institution.** | | |
| | 4730 | Ahmadullah (VI) ... | 17-11 | First. |
| | 4731 | Bhubaneyeshwary Prasad Singh ... | 18-5 | Second |
| | 4732 | Syed Husainuddin Baqa ... | 20-9 | First. |
| | 4733 | Md. Soleman ... | 23-10 | First. |
| | 4734 | Mizon Mustapha Khan | 18 | First |
| | 4735 | Syed Md. Salim ... | 18-9 | Second |
| | | **Jorasanko High School.** | | |
| | 4738 | Ganhar Mirza (V) ... | 16-11 | Second. |
| | | **Sarisa H. E. School.** | | |
| | 4739 | Md. Motior Rohaman... | 19-10 | Second. |

| Edn. | No. | Name | Age | Division in which the candidate has passed. |
|---|---|---|---|---|
| | | **Aandipalia A.-M. M. E. School.** | | |
| Cal. | 4740 | Bysamkeschandra Midya | 21-1 | Second |
| | | **Gaiati M. E. School.** | | |
| | 4741 | Krishnadas Sarkar (M) | 17-6 | First. |
| | | **Oriental Seminary** | | |
| | 4743 | Asutosh Mukhopadhyay ... | 18-8 | First. |
| | | **Sahata M. E. School.** | | |
| | 4744 | Amulyadhan Mukhopadhyay ... | 17-2 | Second. |
| | | **Uluberia M. E. School.** | | |
| | 4747 | Kalidas Sarkar ... | 18-7 | Second. |
| | | **Thakurgaon M. E. School.** | | |
| | 4748 | Dhirendrachandra Chakrabarti ... | 17 1 | Second. |
| | | **Nawabganj M. E. School.** | | |
| | 4749 | Kesabchandra Sarkar (m) ... ... | 18-3 | First |
| | *4750 | Taracharan Basu (MLVmi) ... | 17-4 | First. |
| | | **Angrash M. E. School.** | | |
| | 4751 | Nareshchandra Gangopadhyay ... | 16-9 | First. |
| | | **Nilphamari M. E. School.** | | |
| | 4752 | Gunendranath Gupta (m) ... | 16 1 | First. |
| | | **Bolpur M. E. School** | | |
| | 4753 | Charuchandra Chakrabarti (m) ... | 16 2 | First. |
| | | **Bara B. B. M. E. School.** | | |
| | 4754 | Kaminikanta Biswas ... | 16-2 | First. |
| | | **Maharaja Gossimbazar's Polytechnic Institute.** | | |
| | 4757 | Khagendranath Kundu (m) ... | 17-1 | First. |
| | | **Gopinath M. E. School.** | | |
| | 4758 | Manmatharanjan Tagore (H) ... | 18-3 | First. |
| | | **Jorasanko High School.** | | |
| | 4760 | Md. Shamshul Hoda ... | 18-5 | Third. |
| | | **Calcutta Training Academy.** | | |
| | 4761 | Akhilnath Lahiri (V)... | 19 | First. |
| | | **Govt. H. E. School.** | | |
| | 4762 | Prabhakrishna Chatterji | 18 | Second. |
| | | **Kalinaka High School.** | | |
| | | Saratkumar Pathak ... | 16-1 | Third. |
| | | **Gopiganj P. C. Institution.** | | |
| Cal. | 4767 | Sanjibkumar Barua ... | 18-7 | Third |
| | | **Kasiadanga A. T. Institution.** | | |
| | 4768 | Sudhirchandra Chakrabarti ... | 16 | Second |
| | | **Ripon College School, Calcutta** | | |
| | 4769 | Shyam Narain Prosad (I) | 21 9 | Second |
| | | **Baghbazar High School.** | | |
| | 4771 | Shriniwas Ramchandra Manurker (L m) ... | 18-3 | First |
| | 4773 | Shah Nasirul Haq ... | 18-1 | Second |
| | | **Gaila H. E. School.** | | |
| | 4776 | Hiralal Chakrabarti ... | 17-1 | Third |
| | | **Khulna B. K. Union Institution.** | | |
| | 4777 | Subodhkumar Basu ... | 17-9 | First. |
| | | **Jorasanko High School.** | | |
| | 4778 | Syed Muhammed Jafar | 19 4 | Second. |
| | 4779 | Rahmatulla ... | 17 | First |
| | | **United Missionary Girls' High School.** | | |
| Cal. F. | 1 | Labanyaprabha Gupta (LV) ... | | First. |
| | *2 | Jyotirmayi Datta (MLVG) ... | | First |
| | 3 | Prabhasnalini Banerjee | | Second. |
| | 4 | Ora Nayok ... | | Second. |
| | 5 | Latika Mitra ... | | First. |
| | 6 | Labanyaprabha Bairagi (M) | | First. |
| | 7 | Hemlata Basu ... | | First. |
| | 8 | Hemprobha Sikdar ... | | Second. |
| | 9 | Snehalata Dasgupta ... | | First |
| | | **Victoria Institution.** | | |
| | 10 | Sudhahasini Raychaudhuri ... | .. | Second. |
| | 11 | Surama Bandyopadhyay ... | .. | First |
| | | **Bethune Collegiate School.** | | |
| | 12 | Monisha Chattopadhyay | .. | Second. |
| | 13 | Lilabati Das (MVm) | .. | First. |
| | *14 | Nilima Ghosh (MLI) | . | First |
| | 15 | Jyotsnamoyi Sen (Mm) | .. | First. |
| | 16 | Punyalata Bhattacharyya (m) ... | .. | First. |
| | 17 | Mandakini Chattopadhyay (M) ... | .. | First. |
| | *18 | Ava Sen (LIH) ... | . | First. |
| | 19 | Monorama Ray ... | .. | First. |
| | 20 | Rama Chaudhuri ... | . | Second |
| | | **Calcutta United Missionary Girls' High School.** | | |
| | 21 | Kamini Poddar ... | ... | First. |
| | 22 | Manibala Chattopadhyay ... | | Second |
| | | **U. F. C. High School.** | | |
| | 23 | Prativabala Das ... | | Second. |
| | 24 | Saratasasi Ghosh ... | | Second. |
| | 25 | Hiraprabha Duffadar ... | | Second. |
| | 26 | Satadalbasini Basu ... | | Second |

| Roll. | No. | Name. | Age. | Division in which the candidates has passed. |
|---|---|---|---|---|
| | | **Brahmo Balika Vidyalaya.** | | |
| Cal. P. | 28 | Lila Gupta (Mm) ... | ... | First. |
| | 29 | Subala Sadhukhan ... | ... | Second. |
| | 30 | Suchhrita Chakrabarti (V) ... | ... | First. |
| | 31 | Prabhabati Nag (M m) | ... | First |
| | 32 | Jamuna Mallik .. | ... | First. |
| | 33 | Padmasana Sinha (L m) | ... | First. |
| | 34 | Jyotsna Basu (M m G) | ... | First |
| | 35 | Sadhana Basu ... | ... | First |
| | 36 | Induprabha Ghosh ... | ... | First |
| | 37 | Pratibha Sengupta ... | ... | First. |
| | 38 | Pratibha Sarkar (M V) | ... | First |
| | 39 | Pratibha Dasgupta ... | ... | Third |
| | 40 | Sushama Majumdar ... | ... | Third |
| | 41 | Lalita Sengupta ... | ... | First |
| | 42 | Malati Datta ... | ... | First |
| | 43 | Sudha Mitra .. | ... | First. |
| | 44 | Hemmon Diengdeh (m) | .. | First. |
| | 45 | Sati Lall (m) ... | .. | First |
| | | **Christ Church School.** | | |
| | 46 | Amiyabala De ... | ... | First. |
| | 47 | Angshubala Chrestien (G) | ... | First. |
| | 48 | Rabini Mai Kasar (G) | ... | First |
| | | **Darjeeling Maharani School.** | | |
| | 50 | Hiranprabha Basu ... | ... | First |
| | 51 | Sulekha Chattopadhyay | ... | Second |
| | 52 | Aruna Das ... | ... | First. |
| | | **Diocesan Collegiate School.** | | |
| | 54 | Anukana Dasgupta (G) | ... | First |
| | 55 | Stella Usharani Mukerji (G) ... | ... | Second |
| | 56 | Alaka Chaudhuri (H)... | ... | First |
| | 57 | Jyotsna De (l) ... | ... | First. |
| | 58 | Nira Dattagupta ... | ... | First. |
| | 59 | Induprabha Ghosh (M H) ... | ... | First. |
| | 60 | Sharadashrinivaslu Naidu (m) | ... | First |
| | 61 | Lilavati Landge ... | .. | Second. |
| | 62 | Stella Dinkor ... | ... | Second. |
| | 63 | Irene Sylvia Winfred | ... | First |
| | 64 | Sulekha Ray ... | ... | First. |
| | | **Private Students.** | | |
| | 3 | Mamata Sanyal ... | ... | First |
| | 5 | Mallika Chattopadhyay | ... | Second. |
| | 10 | Brajbala Devi ... | ... | First |
| | 11 | P Mainkyamba ... | ... | Second |
| Cal. P. | 2 | N Kodandu Ran Rao... | 17-7 | P. |
| | 3 | Valoory Ramachandra Row ... | ... 21-1 | P. |
| | 4 | Jampala Jagannadha Row ... | ... 19 4 | P. |
| | 5 | G Subba Raju ... | 20-3 | P. |
| | 6 | D. Krishnamurty ... | 19-2 | P. |
| | 7 | S. Satyanarayana ... | 18 5 | P. |
| | 8 | C Narasimha Reddy ... | 19-9 | P. |
| | 9 | Rabindranath Ray Chaudhury ... | 17-9 | Second. |
| | 10 | Y. Nana Row ... | 21-5 | P. |
| | 11 | Nanigopal Sengupta ... | 16-3 | Second. |
| | 12 | Mahamed Abdul Ghaffar Khan ... | ... 19-3 | Second. |
| | 13 | Kalikrishna Gupta ... | 18-2 | First. |
| | 14 | Hemendrakumar Rudra | 16-1 | First. |
| | 15 | Hirendrakumar Rudra | 16-1 | Second. |
| | 16 | Bijaykrishna Mukhopadhyay ... | ... 16-5 | Second. |
| | 17 | Bhabanicharan Gangupta ... | ... 16 | First. |
| | 18 | Kisorimohan Pal (M) ... | 16-10 | First. |
| | 19 | Pareschandra Basu ... | 16 | First. |
| | 20 | Manilal Kedia ... | 19 | Second. |
| | 21 | Bhupendranath Bhattacharyya ... | 21-4 | First. |
| | 22 | Abdur Rashid Khan (L) | 17-3 | First |
| | 23 | Arakapudi Ramanadham | 20-7 | P. |
| | 24 | Kalahasti Subbarayadu | 20-8 | P. |
| | 25 | Tripuraneni Sivaprasad Rao ... | ... 19-9 | P |
| | 26 | Jitendralal Mitra ... | 16-11 | First. |
| | 27 | A S. Lampi ... | 22 | P. |
| | 28 | George M Stephanos ... | 19-8 | P |
| | 29 | George Kurien ... | 18 2 | P. |
| | 30 | T. C. John ... | 19-4 | P. |
| | 31 | Digindrachandra Nag | 24-9 | Second. |
| | 32 | Abdul Karim Khan ... | 19-4 | Second. |
| | 33 | Tarakdas Bhattacharyya ... | 18-10 | Second. |
| | 34 | Gopinath Bandyopadhyay ... | ... 19-3 | First |
| | 37 | Susilkumar Das ... | 19-1 | Second. |
| | 38 | Nilkanta Chakrabarti ... | 18-6 | First |
| | 39 | Tulsicharan Chattopadhyay ... | ... 22-7 | Second |
| | 40 | Abdul Mois ... | 18-1 | Second |
| | 41 | Din Mohammad Mia ... | 19-11 | First. |
| | 42 | Harendranath Bandyopadhyay ... | 18-6 | Second |
| | 43 | Bhupendranath Ghosh | 19-7 | First. |
| | 44 | Kapileswar Chaudhary | 19-7 | Second |
| | 45 | Tarakprasad Ray (Mm) | 16-7 | First |
| | 46 | Nirajmohan Basu (M) | 17-3 | First. |
| | 47 | Bhujendrakrishna Gupta ... | ... 23-6 | Second. |
| | 48 | Adinath Chandra ... | 23-2 | Second. |
| | 49 | Vaman Vitalrao Patel (m) ... | ... 22-10 | First. |
| | 50 | Monilal Mohanlal ... | 16-10 | First |
| | 51 | P. S. Gopal Rao ... | 20 | P. |
| | 52 | Laljee Morajee Nathani | 16 5 | First |
| | 53 | Thomas Paikada Manuel ... | 23 | P. |
| | 54 | Koelamudi Venkatramaiah ... | 19 1 | P. |
| | 55 | P. V. Seetaramaiah ... | 18 4 | P |
| | 56 | V Ramakotaiha ... | 18-7 | P. |
| | 57 | Sunkara Venkatappaiah | 18-9 | P. |
| | 58 | B Venkatramaiah ... | 19 | P. |
| | 59 | Deonarain Dubey ... | 24-1 | Second |
| | 60 | Haricharan Bandyopadhyay ... | 21 | Second. |
| | 62 | Kulabhushan Mukhopadhyay ... | 19-7 | Second. |
| | 63 | Anilkumar Chanda (Mm) ... | ... 15-5 | First. |
| | 64 | Jogeschandra Sarkar ... | 18-1 | Second. |
| | 65 | Sachindranath Acharyya ... | 16-4 | First. |
| | 67 | Kusumkumar Bhattacharyya ... | 16-5 | First. |
| | 68 | Sudhirkumar Haldar ... | 17-10 | First |
| | 69 | Abdur Razzaque Mir ... | 27-1 | Second. |
| | 70 | Baldeoprasad Saha ... | 33-6 | Second. |
| | 71 | Bishwanath Tiwari ... | 18 | Second. |
| | 72 | Dulalchandra Pagujal... | 19-3 | Second. |
| | 73 | Abanikumar Bandyopadhyay ... | 19-4 | Second. |
| | 74 | Harinandan Prasad ... | 16-10 | Second. |
| | 76 | Muhammad Hossain Ali ... | ... 18-5 | First. |
| | 77 | Syed Bukh Shish Husain... | ... 18-4 | Second. |
| | 78 | Anantakumar Sarkar ... | 21 | Second. |
| | 79 | Jagadischandra Bhattacharyya ... | 20-2 | Second. |
| | 80 | Mahammed Saleh ... | 19-1 | Second. |

| Roll. | No. | Name. | Age. | Division in which the candidate has passed |
|---|---|---|---|---|
| | | **Private Students.** | | |
| Gen. P. | 82 | Kartunamay Chaudhuri | 20-9 | First. |
| | 83 | Brajnandan Prasad Varma ... ... | 20-8 | First. |
| | 84 | Surendranath Basu (Mm) ... ... | 18-1 | First. |
| | 85 | Samarendranath Ghoshal ... | 16-8 | Second. |
| | 86 | Satyaprakas De (Mm) | 16-9 | First |
| | 87 | Kalidindy Subba Raju | 24 8 | P |
| | 88 | Ch. Viswanadha Raju... | 27-10 | P |
| | 89 | Reginald Priyonath Shaw ... ... | 20-8 | First |
| | 90 | Mohd. Wali Ahmed ... | 16-8 | First. |
| | 91 | Md Umor ... | 16-4 | Second. |
| | 92 | Mohini Mohan Chakrabarti ... | 19-2 | First. |
| | 93 | Chaudradwip Dubey ... | 20-10 | Second. |
| | 94 | Jamuna Ray ... | 20-9 | Second |
| | 95 | Mohd. Khali ullah ... | 16-3 | Second |
| | 96 | Hariprasanna De ... | 24 | Second |
| | 97 | Biswanath Hajra ... | 21-10 | Second |
| | 98 | Kshitischandra Sengupta ... ... | 25 3 | First. |
| | 99 | Krishnachandra Pramanik ... ... | 38-9 | Second. |
| | 100 | Allury Rama Rao Choudary ... | 18-8 | P. |
| | 101 | Durgaprasad Bandyopadhyay ... | 19 | Second |
| | 102 | K John Abraham ... | 23-7 | P. |
| | 103 | V K. Kuruavella ... | ... | P. |
| | 104 | K Kuruvilla John ... | 18-3 | P. |
| | 105 | Narendranath Mitra ... | 19-6 | Third. |
| | 106 | Bishnupada Ray ... | 20-11 | Second. |
| | 107 | Anantprasad Ambashanker Dhibar ... | 19 | Second. |
| | 108 | Isidone Jashodharman Bose (H) ... | 16-11 | First. |
| | 110 | Sankarnath Mukhopadhyay (M Lm) ... | 19-3 | First |
| | 111 | Binodlal Gupta ... | 25 | First. |
| | 112 | Ramchandra Prasad Singh ... ... | 19-3 | Second |
| | 114 | Dhirendranath Lahiri | 20-10 | Second |
| | 116 | Adharchandra Das ... | 18-1 | Second. |
| | 117 | Gajadharprasad Ray ... | 22-5 | First. |
| | 118 | Sibabrata Chattopadhyay ... ... | 16-9 | Third. |
| | 119 | Girijaprasad Tiwari (M) | 24-7 | First. |
| | 120 | Jitendranath Ray ... | 16-5 | Second. |
| | 121 | Debendranath Haldar | ... | P. |
| | 122 | Nilmani Biswas ... | 17-10 | First. |
| | 123 | Shashthichandra Kundu | 18-2 | Second |
| | 124 | Pritibhushan Das ... | ... | Third. |
| | 125 | Sitalchandra Ghatak (Mm) ... ... | 19 | First. |
| | 126 | A. T. M. Dethim ... | 16-2 | Second |
| | | **Teachers.** | | |
| | 1 | Md. Abul Quasim ... | 22-2 | P |
| | 5 | Dharanidhar Chattopadhyay ... | 22-3 | P. |
| | 6 | Priyanath Acharyya ... | 25-2 | P. |
| | 7 | Gobindachandra Misra | 30-6 | Second |
| | 8 | Ashutoshkumar Kundu ... | 19-7 | P. |
| | | **Private Students.** | | |
| | 128 | Lalitmohan Bakai (M) | 21-10 | First. |
| | 129 | G. K Naik ... | 18-5 | Third. |
| | 130 | Ganeschankar Gangopadhyay ... | 19-3 | First. |
| | 131 | Kaleesankar Gangopadhyay ... | 16-7 | First. |
| | 132 | Sibchandra Gangopadhyay ... | 18-5 | Third. |
| | 133 | Kiranchandra Chattopadhyay ... | 19-6 | Third. |

| Roll. | No. | Name. | Age. | Division in which the candidate has passed. |
|---|---|---|---|---|
| | | **Salkia A. S. School.** | | |
| New. | 1 | Hrishikes Basu (M m l) | 17 | First. |
| | 2 | Dulalchandra Bandyopadhyay (M) ... | 17-5 | First. |
| | 3 | Mahadeb Bandyopadhyay ... | 16-3 | First. |
| | 4 | Kartikchandra Basu (M m) ... | 19-2 | First. |
| | 5 | Dwarakanath Dhar ... | 17-3 | First. |
| | 6 | Lakshmanchandra Pal | 20-9 | Second. |
| | 7 | Mahimaranjan Sarkar... | 20-3 | First. |
| | 8 | Kalikrishna Chattopadhyay (m) ... | 18-2 | First |
| | 9 | Anilchandra Chattopadhyay (m) ... | 19 1 | Second. |
| | 10 | Ramanimohan Sengupta | 18-3 | Second |
| | 12 | Sukumar Basu ... | 19-4 | Third. |
| | 14 | Taraknath Sur ... | 17-4 | Second. |
| | 18 | Mohinimohan Mukhopadhyay ... | 19 | Third |
| | 19 | Binaykrishna Adhya (M m) ... | 17-8 | First |
| | 20 | Akshaykumar Sengupta | 19-2 | First. |
| | 21 | Bibhutibhushan Khan | 19-8 | First |
| | 22 | Sailendranath Ghosh ... | 18-7 | First. |
| | 23 | Purnaprasad Ghosh ... | 17-10 | First. |
| | 24 | Santoshkumar Chattopadhyay ... | 18-7 | First. |
| | 25 | Gaurimohan Sarkar ... | 16-9 | Second. |
| | 26 | Pratulchandra Ghosh... | 17 8 | Third. |
| | | **Sally Rivers Thompson School.** | | |
| | 27 | Sibcharan Sarkar ... | 19 | Second |
| | 28 | Dwijapada Mitra (M m) | 19-2 | First. |
| | 29 | Manimohan Ghosh ... | 18 4 | Second. |
| | 30 | Gobindalal Gangopadhyay ... | 19-7 | Second. |
| | 31 | Atulchandra Bandyopadhyay ... | 18 | Second. |
| | 32 | Ranjitkrishna Mukhopadhyay (M) ... | 23-1 | First. |
| | 33 | Anupkrishna Mukhopadhyay ... | 20-2 | First. |
| | 34 | Bibhutibhushan Manna | 16 | Second. |
| | 35 | Durgadas Haldar (MLm) ... | 16-3 | First |
| | 36 | Krishnakamal Bhattacharyya (Ml) ... | 18-1 | First. |
| | 37 | Sukumar Bhattacharyya ... | 16-7 | Second. |
| | 38 | Susilkumar Mukhopadhyay ... | 17 | Second. |
| | 39 | Santoshkumar Mukhopadhyay ... | 17-4 | First. |
| | 40 | Arunchandra Lahiri ... | 17-3 | First |
| | 42 | Kasiswar Ghoshal ... | 16-6 | Second |
| | 43 | Panchkari Ghosh ... | 16-11 | Third |
| | 44 | Kamalkumar Ghosh ... | 16-3 | Second |
| | 45 | Dhirendranath Ghosh... | 18-7 | Third. |
| | 46 | Subhransubikas Gangopadhyay ... | 19-9 | Second. |
| | 47 | Phanibhushan Gangopadhyay ... | 16-2 | Second. |
| | 48 | Guiram Das ... | 18-8 | Second |
| | 50 | Jugalkisor Bandyopadhyay ... | 18-8 | Second. |
| | | **B. K. Pal's Institution, Baje Sibpur.** | | |
| | 51 | Sudhirkumar Ghosh ... | 18-7 | First. |
| | 52 | Bibhutibhushan Chattopadhyay ... | 16-2 | First. |
| | 53 | Ganeschandra Kundu... | 18 | First. |
| | 54 | Susilkumar Ghosh (M) | 16 | First. |
| | 55 | Subhendranath Mitra... | 17-5 | First. |
| | 56 | Arunkumar Ghosh ... | 16-2 | First. |
| | 57 | Nimaichandra Gangopadhyay ... | 18 | Second. |

| Roll. | No. | Name | Age. | Division in which the candidate has passed. |
|---|---|---|---|---|
| | | **R. K. Pal's Institution, Raja Sibpur.** | | |
| Hindu. | 58 | Krishnachandra Sen ... | 17-4 | First. |
| | 59 | Sudhakar Chaudhuri (Mm) ... | 17-5 | First. |
| | 60 | Balaicharan Ghosh (m) | 17-1 | First. |
| | 61 | Kalidhan Bandyopadhyay (M) ... | 16-1 | First. |
| | 62 | Sudhirkumar Mukhopadhyay ... | 16-4 | First |
| | 63 | Amarendranath Majumdar ... ... | 16-8 | First. |
| | 64 | Ratikanta Das ... | 17-4 | First. |
| | 65 | Nisikanta Ghosh ... | 16 3 | First |
| | 66 | Lakshminarayan Ghosh ... | 16-1 | Second. |
| | 67 | Agamnath Datta ... | 18 1 | Second. |
| | | **Salkia Hindu School.** | | |
| | 68 | Jatindramohan Chattopadhyay ... | 16-9 | Second |
| | 69 | Harisadhan Santra (Mm) | 17-10 | First |
| | 70 | Panchanan Sur (M) ... | 17-3 | First. |
| | 71 | Nagendranath Datta ... | 17-2 | First |
| | 72 | Bhabendranath Ray ... | 17-2 | First |
| | 73 | Abhaycharan Bag (M) | 21 | First. |
| | 74 | Bamabadan Ghoshal ... | 20-2 | Second |
| | | **Sibpur Dinabandhu Institution.** | | |
| | 75 | Nayanranjan Das ... | 16 1 | First |
| | 76 | Ratanchandra Nag ... | 17-11 | First |
| | 77 | Syed Syfuddin Ahmed | 17-6 | Third. |
| | 78 | Radhakrishna Tripathi | 17-3 | Second |
| | 79 | Mohinimohan Chattopadhyay ... | 20-3 | Second |
| | 80 | Amiyachandra Mukhopadhyay (mMo) ... | 16-8 | First |
| | 81 | Nagendranath Bandyopadhyay ... | 16 9 | Second. |
| | 83 | Haraprasanna Nandi ... | 19-9 | Second. |
| | 84 | Bhaskarchandra Bandyopadhyay ... | 16-6 | Second |
| | 85 | Amarendranath Chattopadhyay ... | 17 | Third |
| | 86 | Rais Uddin Mollah ... | 16-1 | Second. |
| | 89 | Bikasranjan Mitra ... | 17 | Second. |
| | | **Town School, Howrah.** | | |
| | 90 | Jagabandhu Chattopadhyay ... | 18 3 | Second. |
| | 93 | Gaurisankar Datta ... | 17-1 | Third. |
| | 94 | Jugalkisor Ghosh ... | 17 3 | First |
| | 95 | Sailendrakumar Mukhopadhyay ... | 19-10 | Third. |
| | 96 | Haridas Pal (m) ... | 17-3 | First |
| | 97 | Syamasankar Datta .. | 18-7 | Third. |
| | 100 | Chandicharan Sarkar ... | 18-11 | Second. |
| | | **Howrah Zillah School.** | | |
| | 101 | Ayodhyanath Adhikari (ML m l) ... | 16-8 | First |
| | 102 | Sunilkumar De (m) ... | 17-3 | First. |
| | 103 | Haraprasad Karmakar | 16-3 | First. |
| | 104 | Srikumar Mitra (L l) ... | 17-5 | First. |
| | 105 | Ramanath Chattopadhyay ... | 16 | First. |
| | 106 | Durgaprasanna Bandyopadhyay ... | 17-1 | First |
| | 107 | Somanath Bhattacharya (H) ... | 17-2 | First. |
| | 108 | Prabhupada Basu (m) | 16-4 | First. |
| | 109 | Bijaykumar Bangalta | 17-6 | First. |
| | 110 | Kanjnath Mukhopadhyay (M) ... | 17-7 | First |
| | 111 | Dhrubasankar Mukhopadhyay ... | 18-7 | Second. |
| | 112 | Sailendranath Sarkar ... | 19-5 | Second. |
| | 113 | Jitendranath Som ... | 20-8 | First. |

| Roll. | No. | Name | Age. | Division in which the candidate has passed. |
|---|---|---|---|---|
| | | **Howrah Zillah School.** | | |
| Hindu. | 114 | Subodhchandra Nandi (M m) ... | 17-3 | First. |
| | 115 | Ramkrishna Bhaduri (M) ... | 17-8 | First. |
| | 116 | Sambhunath Chattopadhyay (M m M c) | 16-8 | First. |
| | 117 | Sudhirkumar Das (M m) | 17-8 | First. |
| | 118 | Kamalacharan Das (M m) ... | 16-10 | First. |
| | 119 | Bhupalchandra Datta (M m) ... | 19-4 | First. |
| | 120 | Subodhkumar Kundu | 18 | First. |
| | 121 | Santipriya Mitra (m) ... | 17-8. | First. |
| | 122 | Nalinibhushan Pal (Mm) ... | 18-3 | First |
| | 123 | Rakhaldas Sarkar ... | 17-1 | First. |
| | 124 | Birendrakumar Sarkar (Mm) ... | 17-5 | First. |
| | 125 | Sakh Nurali Haldar (Mm) .. | 19 | First |
| | 126 | Panabicharan Mitra (m) | 17 5 | First. |
| | *127 | Nandalal Kundu (ML lH) ... | 19 | First |
| | 128 | Prabodhkumar Sinha ... | 16 7 | First. |
| | 129 | Sailendranath Mitra ... | 16-3 | First. |
| | 130 | Akshaykumar Ray ... | 17 | First. |
| | 131 | Kazi Abdul Moudud ... | 17 4 | First. |
| | | **Baluti H. E. School.** | | |
| | 132 | Karunanidan Ghosh ... | 18 5 | First |
| | 133 | Sambhucharan Ghosh (m) ... | 20-1 | First. |
| | 134 | Upendranath Ghosh ... | 17-5 | Second. |
| | 135 | Satyacharan Hati ... | 18 | Second. |
| | | **I. R. Bellilios Institution, Howrah.** | | |
| | *136 | Bibhutibhushan Das (MLml) ... | 16-7 | First |
| | 137 | Prasadchandra Hajra (M) ... | 16-10 | First. |
| | 138 | Sudhirkumar Pain (Lml) ... | 17-11 | First. |
| | 139 | Ajitkumar Ray (MLm) | 18-1 | First. |
| | 140 | Satyendranath Mukhopadhyay (MLm) ... | 18-7 | First. |
| | 141 | Anandamohan Chakrabarti (Mm) ... | 17 | First. |
| | 142 | Bimalendrakumar Basu | 18-9 | First. |
| | 143 | Kalipada Bhattacharyya (M) ... | 18-8 | First. |
| | 144 | Nutbihari Ghosh (Mm) | 19-3 | First. |
| | 145 | Ramkrishna Ghosh ... | 18 | Second. |
| | 146 | Kisorimohan Ray (m) | 19 | First. |
| | 147 | Gurupraasanna Mukhopadhyay ... | 16-11 | Second. |
| | 148 | Chandisani Mukhopadhyay ... | 17-7 | Second. |
| | 149 | Prabodhkumar Basu ... | 16-4 | First. |
| | 150 | Lalitmohan Bhattacharyya ... | 17-3 | Second. |
| | 153 | Amalchandra Hajra ... | 18-1 | Second. |
| | *156 | Manmohan Das ... | 18-2 | Second. |
| | 157 | Tulasicharan Chandra | 22 | Second. |
| | 160 | Sailesikumar Datta (M) | 16-10 | First. |
| | 161 | Bibhutibhushan Ray ... | 16-1 | First. |
| | 162 | Sudhirkumar Ray ... | 17-1 | First. |
| | 163 | Sudhirkumar Chattopadhyay ... | 17-9 | Second. |
| | 165 | Sukumarchandra Mitra | 17-6 | First |
| | 166 | Jitendrakrishnaji Deb (m) | 17-5 | Second. |
| | 167 | Sibasankar Bhattacharyya (Ll) ... | 18-6 | First. |
| | 168 | Panchanan Manna ... | 18-8 | First. |
| | *169 | Bijaykrishna Chattopadhyay ... | 20-4 | Second. |
| | 170 | Rabindranath Basu ... | 17-7 | First. |

| Roll. | No. | Name. | Age. | Division in which the candidate has passed. |
|---|---|---|---|---|
| | | **Sibpur Dinabandhu Institution.** | | |
| How. | 174 | Abulkhair Md. Siddiq | 17-11 | Second. |
| | 175 | Manomohan Mukhopadhyay ... | 16-9 | First. |
| | 177 | Manikchandra Mukhopadhyay ... | 18-8 | Second |
| | | **Howrah Ripon Collegiate School.** | | |
| | 178 | Ramkrishna Pathak ... | 18-2 | Second |
| | 179 | Debeschandra Mukhopadhyay (M) ... | 16 3 | First |
| | 180 | Srischandra Dhara . | 17-2 | Second |
| | 181 | Lalitmohan Bandyopadhyay ... | 16-3 | Third. |
| | 182 | Silirkumar Kundu ... | 19-2 | Second |
| | 183 | Sudhamay Kole ... | 19-1 | Third |
| | 184 | Jatindranath Ghosh ... | 17-8 | First |
| | 185 | Sasankasekhar Ray ... | 17-4 | Second |
| | 186 | Bhabataran Maji (m) | 19-10 | Second |
| | 187 | Bibhutibhushan Mukhopadhyay . ... | 17-1 | First |
| | 188 | Manindranath Das ... | 19 1 | Second |
| | 189 | Upendranath Hajra ... | 18-5 | Second |
| | 190 | Ardhendusekhar Samanta ... | 16-1 | Second |
| | 191 | Jugalkisor Nandi ... | 21-7 | First |
| | 192 | Baldeo Singh ... | 19 10 | Second |
| | 193 | Amarendranath Mitra (Mm) ... | 18 | First |
| | 194 | Harendranath Mukhopadhyay (MH) ... | 13 3 | First |
| | 195 | Bechariam Mandal | 18 3 | First |
| | 198 | Subodhchandra Basu .. | 17 | First |
| | 199 | Kritantakumar Bandyopadhyay .. | 16 2 | First |
| | 202 | Kartikchandra Mandal | 17-11 | First |
| | 203 | Satischandra Chakrabarti ... | 17-6 | First |
| | 204 | Santoshkumar Mukhopadhyay ... | 19 1 | Third |
| | 206 | Radharam Pandit ... | 17-8 | Second |
| | 207 | Brajakisor Kumar ... | 19-1 | Third |
| | 208 | Ajitkumar Chattopadhyay ... | 16-2 | Second |
| | 211 | Prabodhchandra Ghosh | 17-9 | Second |
| | 212 | Satyaranjan Bhaduri .. | 20-3 | First |
| | 213 | Pulinkrishna Pal ... | 17-3 | Second |
| | 214 | Sambhunath Mitra ... | 17 | First |
| | 215 | Radhapada Gautam ... | 16-5 | First |
| | 216 | Manmathanath Das ... | 18 1 | Second |
| | 217 | Santoshkumar Pal ... | 18-5 | Third |
| | 218 | Praphullachandra Pal | 18-1 | First |
| | 222 | Tarapada Mitra ... | 18 10 | Second |
| | 224 | Satyaranjan Chandra ... | 17-6 | Third. |
| | 225 | Achintaprakas Dasgupta ... .. | 17 8 | Second |
| | 226 | Purnachandra Ghosh ... | 19 1 | Second |
| | 227 | Durgadas Dhar ... | 18 | First |
| | 228 | Bidhubhushan Mandal | 16-1 | Third. |
| | 229 | Panchanan Basu ... | 18-1 | Second |
| | 231 | Govind Pershad ... | 19-7 | Second |
| | 232 | Bansi Proshad .. | 19 | First |
| | 233 | Jhulan Prasad Verman | 16-11 | First |
| | | **Raja Sibpur B. K. Pal Institution.** | | |
| | 234 | Sudhansubhushan Mukhopadhyay ... | 18-3 | Second |
| | 235 | Kalipada Bandyopadhyay ... | 18-4 | Second |
| | | **I. R. Belilios Institution, Howrah.** | | |
| | 236 | Mahammad Kazem Ali (Mm) ... ... | 19 | First |
| | 237 | Bibhutibhushan Datta | 19-6 | Third. |
| | 239 | Prankrishna Pal ... | 17-1 | Third. |
| | 240 | Kisorimohan De ... | 19-1 | Second |
| | 242 | Praphullakumar Ghosh | 18-5 | Second. |
| | | **Salkia A. S. School.** | | |
| | 245 | Biswamaryan Mallik ... | 19-2 | Third. |
| | 246 | Sailacharan Bhattacharyya ... | 17-8 | First |
| | 247 | Sambhucharan Pal ... | 22 2 | Second. |
| | | **Bantra M. S. P. C. H. E. School.** | | |
| | 248 | Subalchandra Basu . | 17-5 | First |
| | 249 | Srimantakumar Datta .. | 18-2 | First |
| | 250 | Sailendranath Basu ... | 18 | First |
| | 251 | Sachindranath Ghoshal | 16-9 | Third |
| | 252 | Sobhanlal Bhattacharyya ... | 17-7 | Second |
| | 253 | Praphullakumar Datta | 19-2 | First |
| | 254 | Pramathanath Chattopadhyay (MmH) . | 16-1 | First. |
| | 255 | Manindranath Chaudhuri ... .. | 17-4 | First |
| | 256 | Murarimohon Hazra (MLml) ... | 18-1 | First. |
| | 257 | Lalitmohan Basu .. | 18 3 | Second. |
| | 258 | Khagendranath Hajra | 19-2 | First |
| | 260 | Kamalakanta Baral ... | 16-2 | First. |
| | 262 | Gokulchandra Datta .. | 18-10 | First |
| | 264 | Bibhutibhushan Kundu | 19-5 | Second. |
| | 266 | Binaykrishna Biswas ... | 17-7 | Second |
| | 267 | Arunchandra Mitra .. | 19-11 | First. |
| | 268 | Akshaykumar Mukhopadhyay ... | 16-11 | First |
| | 269 | Ardhendunath Mallik | 17-7 | First |
| | 270 | Atalchandra Chak (m) | 20 | First |
| | 271 | Abhaypada Bandyopadhyay (Mm) . | 18 4 | First |
| | 272 | Sudhirkumar De .. | 16 2 | Second. |
| | 273 | Sailendranath Mitra ... | 16-3 | First |
| | 274 | Sachindranath Kumar | 17-1 | First. |
| | 276 | Praphullachandra Mitra | 17-1 | Second. |
| | 277 | Paritoshkumar Sen (Mm) .. ... | 16-2 | First |
| | 280 | Gokulchandra Rit ... | 18-11 | Third. |
| | 283 | Biswanath Ghosh (Mm) | 16-2 | First. |
| | 284 | Achalbhushan Mallik (Mm) ... ... | 16 | First |
| | 286 | Manikchandra Kumar | 18-7 | Second |
| | 289 | Paritosh De ... | 17-3 | Second |
| | 290 | Pulinbihari Maji ... | 18-8 | Third. |
| | 292 | Nitaicharan Das (M) .. | 16-4 | First |
| | 293 | Nepalchandra Gupta .. | 18-2 | First |
| | 295 | Jibankrishna Chattopadhyay ... | 18-2 | Second. |
| | 296 | Hemendranath Barat .. | 18-1 | Second |
| | 297 | Damodar Chattopadhyay ... | 18 | Second |
| | | **Howrah Ripon Collegiate School.** | | |
| | 303 | Binaykumar Sengupta | 20 3 | Second. |
| | | **Bantra M. S. P. C. H. E. School.** | | |
| | 304 | Nripatimohan Mukhopadhyay | 18-2 | First. |
| | | **Teachers.** | | |
| | 1 | Gangadhar Bhuma (M) | 23 2 | First. |
| | 2 | Hemantakumar Das (Mm) ... | 21-3 | First. |

| Roll. | No. | Name. | Age. | Division in which the candidate has passed. |
|---|---|---|---|---|
| | | **Dibrugarh Government H. E. School.** | | |
| Deb. | 2 | Tankeswar Gogai ... | 18-1 | First |
| | 3 | Narayanchandra Das | 19-1 | Second |
| | 4 | Madanchandra Mech ... | 20-5 | Second. |
| | 5 | Chandrakanta Barkakati ... | 17-1 | Second. |
| | 6 | Jibanchandra Dattabarah ... | 18-3 | Second |
| | 7 | Sureschandra Das ... | 18-2 | Second |
| | 8 | Tileswar Gogai ... | 16-8 | First. |
| | 10 | Saurindraram Khaund (m) ... | 16 3 | First |
| | 11 | Mirendranath Gohain (M) ... | 18-3 | First. |
| | 13 | Ratikanta Patoi ... | 17-2 | Second |
| | 15 | Mahendranath Gohain | 19-2 | Second. |
| | 18 | Dibaram Saikia (M) ... | 17-4 | First. |
| | *19 | Tapeschandra Bagchi (MLml) ... | 17-4 | First |
| | 20 | Amulyakumar Sengupta | 19-3 | Second |
| | *21 | Susobhankumar Guha (MLml) ... | 17-3 | First |
| | 22 | Sukomal Chattopadhyay | 20-3 | First |
| | 23 | Dwijendranath Chakrabarti (M) ... | 16-7 | First |
| | 24 | Sudhirkanta De ... | 16-6 | Second |
| | 25 | Nanigopal Chattopadhyay ... | 20 7 | Second |
| | 26 | Sisirkumar Sengupta (Mm) ... | 18-7 | First |
| | 27 | Santoshkumar Sen (M) | 16-9 | First |
| | 28 | Pratulchandra Das .. | 16 4 | First |
| | 29 | Pramathanath Sengupta | 17-8 | Second |
| | 30 | Nagendranath Datta (m) ... | 16 4 | First |
| | 31 | Birendranath Das ... | 17-2 | First |
| | 33 | Amarendranath Das ... | 17-1 | First. |
| | 35 | Dinabandhu Mukhopadhyay ... | 16-2 | First |
| | 36 | Kamakhyalal Ghosh (M) ... | 16-3 | First |
| | 37 | Haradhan Chattopadhyay ... | 17-3 | First |
| | 38 | Jitendramohan Gangopadhyay ... | 19-4 | Second |
| | 39 | Nurul Gham ... | 16 | First. |
| | 40 | Nawab Danish Muhammad (m) ... | 18-8 | First |
| | 41 | Shaikh Muhammad Sharif ... | 19-3 | Second. |
| | 42 | S. Matab Hussain ... | 18-2 | First. |
| | 43 | Bulbonshah ... | 16-2 | Third |
| | | **Dibrugarh George Institution.** | | |
| | 44 | Manmay Pramanik ... | 16-3 | First. |
| | 46 | Asutosh Sen ... | 16-2 | Second |
| | 48 | Tusilkumar Barman ... | 17 | First. |
| | 49 | Kisorimohan Dastidar | 17-1 | Second. |
| | 50 | Jonabar Gohain ... | 18-2 | Second |
| | 53 | Patitchandra Datta ... | 18-7 | Second |
| | 55 | Rameschandra Das ... | 19-3 | Third |
| | 58 | Harabilas Das ... | 20-1 | First |
| | 60 | Mahananda Bardolai ... | 17-5 | Second. |
| | 64 | Siddhiram Bhuyan ... | 18 9 | First. |
| | 65 | Dharmeswar Sarmabarpujari ... | 16-8 | Second |
| | 66 | Dayalchandra Baruya (M) | 17-6 | First |
| | 68 | Mazharal Anwar Hazarika ... | 16-2 | First |
| | 70 | Samsul Hoque (L) ... | 18-2 | First. |
| | 72 | Md. Habib Ullah ... | 17-1 | Second. |
| | | **Manipur Johnstone H. E. School.** | | |
| | 73 | Gauramani Singh Yumtembamcha (M) ... | 17-10 | First. |
| | 76 | Ibotonsana Rajkumar | 18-9 | First. |
| | | **Manipur Johnstone H. E. School.** | | |
| Deb | 77 | Koireng Singh Thounaojamcha (ml) ... | 17-9 | First |
| | 79 | Bharat Roy Laurengbancha (Mm) ... | 20-7 | First. |
| | 80 | Iboongohal Singh Senjamcha ... | 19-6 | Second. |
| | 81 | Satishchandra De ... | 17-11 | Second. |
| | | **Tezpur Government High School.** | | |
| | 82 | Debaprasad Duara (Mm) ... | 16 | First |
| | | **Dibrugarh Government Girls' High School.** | | |
| Deb. F. | 1 | Jyotirmayee Purkayastha ... ... | | Second |
| | 2 | Banalata Gangopadhyay ... | | First. |
| | 3 | Amiya Ghosh ... ... | | First. |
| | 4 | Priyalata Kakati ... ... | | First. |
| | 5 | Punyaprabha Das ... ... | | First |
| | 6 | Tilottoma Hazarika ... ... | | Second |
| | 7 | Hemakanti Baruya ... ... | | Second. |
| | | **Private Student.** | | |
| Deb. P. | 1 | Debendranath Bhattacharyya (m) ... | 20-1 | First. |
| | 2 | Kamaldeo Dubey ... | 21-1 | Second |
| | | **Tezpur Government High School.** | | |
| Gau. | 1 | Nanigopal Mukhopadhyay .. ... | 19-1 | First |
| | 2 | Makhanlal Sutradhar .. | 20-3 | First |
| | 3 | Charuchandra Datta ... | 17-3 | First |
| | 4 | Nilkamal Bhaumik ... | 20-7 | Second. |
| | *5 | Susilchandra Maitra (MLml) .. | 19-2 | First |
| | 6 | Ajitkumar Mukhopadhyay (m) ... | 18 | First. |
| | 7 | Bhupendranath Das ... | 17-10 | First |
| | 8 | Sudhirkumar Das ... | 17-4 | Second |
| | 11 | Kandarpakumar Majumdar (Mm) ... | 17-2 | First. |
| | 12 | Durgaram Das ... | 16-4 | First |
| | 14 | Bimalakanta Das ... | 18-1 | First. |
| | 17 | Jibeswar Goswami ... | 16-2 | Second. |
| | 18 | Jnanendramohan Nath (Mm) ... ... | 16-4 | First |
| | 19 | Liladhar Sarma ... | 18-1 | Second |
| | 21 | Jibanchandra Bhuyan | 20-10 | Second. |
| | 22 | Kusalchandra Bharali | 18-1 | Second |
| | 23 | Dhaniram Saikia ... | 19-1 | First |
| | | **Sonaram Government Aided High School.** | | |
| | 25 | Balabhadra Mahanta ... | 18-8 | Second |
| | 28 | Purnachandra Adhikari (Mm) ... ... | 20-2 | First |
| | 31 | Tarinicharan Sarma ... | 19-1 | First |
| | 32 | Chintaram Mohanta ... | 19-1 | Third. |
| | 34 | Madhabchandra Baruya | 17-2 | Second. |
| | 37 | Mazhar Hossein ... | 17-2 | Second. |
| | 38 | Islamuddin Ahmed ... | 22-8 | Second |
| | 39 | Foridullah ... | 21 | Second |
| | | **Mangaldai Government High School.** | | |
| | 40 | Padmananda Goswami (Mm) | 16-10 | First |
| | 42 | Kaliram Sarma ... | 20-1 | First. |
| | 43 | Arabinda Saharia ... | 16-11 | Second. |
| | 44 | Jinaram Medhi ... | 16-10 | First. |
| | 45 | Bhumidhar Sarma ... | 18-2 | First. |
| | 46 | Abhaychandra Rajbansi | 22-7 | Second. |
| | 47 | Ismail Ali (M) ... | 19-2 | First. |

| Roll. | No. | Name. | Age. | Division in which the candidate has passed. |
|---|---|---|---|---|
| | | **Gosipara P. R. Government High School.** | | |
| Gau. | 48 | Niharranjan Mukhopadhyay (Mm) ... | 16-1 | First. |
| | 49 | Sisirkumar Gangopadhyay (Mml) ... | 17-5 | First |
| | 50 | Bankimchandra Lahiri | 18-3 | First. |
| | 51 | Maheschandra Bhattacharyya (V) ... | 18-1 | First. |
| | 52 | Sachindranath Nath ... | 17-11 | Second |
| | 53 | Manindralal Dasgupta | 17-10 | First |
| | 54 | Ganeschandra Nath ... | 18-2 | Second |
| | 55 | Hemendranarayan Das (Mm) ... ... | 17-6 | First |
| | 56 | Saradindu Nath (Mm) | 17-1 | First |
| | 57 | Maniruddin Ahmed ... | 18-11 | First. |
| | | **Dhubri Government High School.** | | |
| | 58 | Raghabchandra Das ... | 19-1 | First |
| | 59 | Madaram Brahma ... | 17-1 | First |
| | 60 | Gaurangachandra Pal | 18-1 | First |
| | 61 | Jogendrachandra Dasgupta (Mm) ... | 17-2 | First |
| | 62 | Amarendranath Sen ... | 16-1 | First |
| | 63 | Nagendranath Chakrabarti (M) ... | 16-8 | First |
| | 64 | Manmohan Ghosh ... | 19-1 | Second |
| | 65 | Srischandra Raychaudhuri (Mm) ... | 18-2 | First |
| | 66 | Bhairabchandra Das .. | 19-7 | First. |
| | 67 | Nandadulal Gangopadhyay (Mm) ... | 18-1 | First |
| | 68 | Nareschandra Basu (Mm) .. ... | 16-3 | First. |
| | 69 | Hemantakumar Ghosh (m) ... ... | 19-3 | First |
| | 70 | Sudhirchandra Chakrabarti (Mm) ... | 19-4 | First. |
| | 71 | Durgapada Bandyopadhyay (m) ... | 18 7 | First. |
| | 72 | Nripendranath Guha ... | 16 1 | First |
| | 73 | Birendrachandra Majumdar .. ... | 20-6 | First |
| | 74 | Manindrasaran Sanyal (M) . .. | 17-8 | First |
| | 75 | Kumudlochan Chakrabarti ... ... | 17-11 | First |
| | 76 | Nirmalkanti Ghosh ... | 17-6 | First |
| | 77 | Kazimuddin Ahammed | 19 3 | Second. |
| | 78 | Rahimuddin Ahmed (Mm) ... ... | 18-1 | First. |
| | 79 | Moktal Hussein Ahmed | 18-1 | First. |
| | | **Tezpur Government High School.** | | |
| | 80 | Manikchandra Talukdar (m) | 16-1 | Second |
| | | **Gauhati Cotton Collegiate School.** | | |
| | 81 | Manikchandra Das (m) | 19-7 | First |
| | 82 | Bhubanchandra Baruya (m) | 17-2 | First |
| | 83 | Raghunath Mahanta | 17-2 | First. |
| | 84 | Harakanta Das (MLml) | 18-2 | First |
| | 85 | Lakshminath Das (Mm) | 17-9 | First. |
| | 86 | Kamaleswar Bujarbaruya (ml) ... | 17-2 | First. |
| | 87 | Saratchandra Thakuria (Mm) ... ... | 17-3 | First. |
| | 88 | Harimohan Das ... | 20-6 | Second |
| | 89 | Krishnakanta Das (M) | 23-1 | First |
| | 90 | Kamalakanta Das (Mm) | 22 | First. |
| | 91 | Grishcandra Goswami (Mm) | 16-1 | First. |
| | 92 | Bhubanchandra Deka (Mm) | 19-8 | First. |

| Roll. | No. | Name. | Age. | Division in which the candidate has passed. |
|---|---|---|---|---|
| | | **Gauhati Cotton Collegiate School.** | | |
| Gau. | 93 | Dharanidhar Chaudhuri | 16 | First. |
| | 94 | Umeschandra Sarmabardolai (Mm) | 16 3 | First. |
| | 95 | Sunandaram Nath (Mm) | 19-1 | First |
| | 96 | Agitram Das ... | 18-1 | Second. |
| | 97 | Pramodkanta Baruya (m) | 16-4 | First |
| | 98 | Mahendrachandra Chaudhuri | 17 1 | Second. |
| | 99 | Suryyakanta Kakati (Mm) | 18-11 | First |
| | 100 | Atulchandra Hajarika (Mm) | 17 | First |
| | 103 | Taranath Sarma ... | 16-2 | First |
| | 104 | Umanath Barkataki ... | 18-2 | First |
| | 105 | Rajatchandra Goswami (M) | 19 2 | First |
| | 106 | Haliram Das ... | 19-1 | Second |
| | 107 | Surendranath Rajmedhi | 17-11 | Second |
| | 108 | Saratchandra Lekharu | 18-5 | Second |
| | 109 | Ratneswar Das .. | 18-7 | Second |
| | 110 | Bisweswar Kataki ... | 21 | Third |
| | 111 | Padmaram Bora ... | 17 2 | Second. |
| | 112 | Gopikanta Dattabaruya | 19-1 | Second. |
| | 113 | Basanta Kumar Chaudhuri .. | 21-11 | Third |
| | 114 | Bahuram Das .. | 18-7 | Second |
| | 115 | Harendranath Baruya | 17 6 | First |
| | 116 | Jibanchandra Changkakati | 19-2 | Third |
| | 117 | Balichandra Das .. | 21-3 | Second |
| | 118 | Pabitrakumar Sen .. | 16-1 | Second |
| | 119 | Maheschandra Sen ... | 17 8 | First |
| | 120 | Haradeb Sarma . | 18-2 | First |
| | 121 | Krishnakanta Sarma ... | 19-3 | Second |
| | 122 | Durgadas Sarma ... | 18-1 | Second |
| | 123 | Nareschandra Basu (MmMc) | 16-7 | First |
| | 124 | Saileschandra Sen (Mm) | 19-1 | First |
| | 125 | Saurendrasekhar Bandopadhyay (Mm) ... | 17-2 | First |
| | 126 | Mantoshkumar Chattopadhyay (MLml) | 16 4 | First. |
| | 127 | Himansumohan Das (MLml) ... | 17-11 | First. |
| | 128 | Haridas Raha ... | 19-7 | First |
| | 129 | Ardus Ali Dewan (l) | 18 8 | First |
| | 130 | Md Wahead Ullah | 17-3 | First |
| | 131 | Mosrof Hossain ... | 18 5 | Second |
| | 132 | Md Syedar Rohman | 18-1 | First |
| | 133 | Md Badarudduza | 20-2 | Second |
| | 134 | Abul Khair Syed Ahmed (Mm) ... | 18-8 | First |
| | 135 | Syed Azizur Rahman (m) ... | 18-2 | First. |
| | 136 | Syed Yakub Ali ... | 19-2 | First |
| | 137 | Sahu Rahman ... | 21 | Second |
| | | **Sowgong Government High School.** | | |
| | 138 | Kamakhyaprasad Rala | 18-2 | First |
| | 139 | Praphullakumar Biswas | 20 1 | Second |
| | 140 | Purnaram Bara (Mm) | 20 2 | First |
| | 141 | Susilkumar baruya (Mm) ... | 18-1 | First |
| | 142 | Dharmaram Bardolai ... | 21-2 | First |
| | 143 | Jayram Bardolai ... | 24 | Second |
| | 144 | Hiranyachandra Bhuyan (MLml) ... | 17-11 | First |
| | 145 | Jursingh Deka ... | 21-2 | First |
| | 146 | Poalchandra Duara (Mm) ... | 18-2 | First |
| | 147 | Mahendranath Hajarika (Mm) ... | 17 | First |
| | 148 | Tarunchandra Mahanta (Mm) ... | 20 2 | First. |
| | 149 | Haranath Mikir (m) ... | 19-11 | First |

| Roll. | No | Name. | Age. | Division in which the candidate has passed. |
|---|---|---|---|---|
| | | **Nowgaon Government High School.** | | |
| | 150 | Ghanakanta Saikia (Mm) ... | 17-2 | First |
| | 151 | Ramakanta Sarma (M) | 21-8 | First |
| | 152 | Gopalchandra Baruya (Mm) ... | 18-1 | First. |
| | 153 | Jogendranath Baruya | 20-2 | First. |
| | 154 | Indrabhushan Das (M) | 19-1 | First |
| | 155 | Phatikchandra Bairagi | 19-2 | First |
| | 156 | Pushpakanta Barkataki | 16-6 | Second |
| | 157 | Dakshinram Das ... | 20 | First. |
| | 158 | Nandeswar Kalita ... | 18-2 | Second. |
| | 159 | Narayanchandra Mahanta (Ll) | 17-3 | First |
| | 160 | Tikendranath Mahanta | 18 8 | Second |
| | 161 | Indrasen Majumdar ... | 19 4 | Second |
| | 162 | Bisweswar Phukan ... | 21-2 | Second |
| | 163 | Nirikanta Baruya ... | 18 1 | Third |
| | 164 | Jasodakanta Baruya ... | 16-2 | First. |
| | 165 | Md Eltaf Hussein ... | 16-6 | First |
| | 166 | Abu Jaffir Md Mansur . | 16 3 | Second |
| | 167 | Abdur Rohman .. | 17-2 | Second |
| | 168 | Md Serar (M) ... | 16-7 | First |
| | | **Abhayapuri Abhayeswari H. E. School.** | | |
| | 170 | Mohansinha Barman .. | 22-4 | Third |
| | 171 | Kamaleswar Das (Mm) | 17 2 | First |
| | 172 | Adyanath Das (Mm) | 17-2 | First |
| | 173 | Jogendranath Chakrabarti (Mm) | 22 4 | First |
| | 174 | Phanibhushan Chakrabarti (M) ... | 18-4 | First |
| | 175 | Nimaichand Datta .. | 17-2 | Second. |
| | 176 | Anathbandhu Bandopadhyay ... | 17-1 | Second |
| | 177 | Jalal Uddin Ahmed ... | 21 7 | Second |
| | 178 | Abdul Jabber Sircar .. | 17-2 | First |
| | 179 | Mohommad Jakub Ali | 18-2 | First. |
| | 180 | Amiruddin Ahmed ... | 19-4 | First |
| | | **Barpeta Government High School.** | | |
| | 181 | Bansidhar Chaudhuri (Mm) | 17-2 | First |
| | 182 | Bijaychandra Das (M) | 17-2 | Second |
| | 183 | Dharanath Das (Mm) | 16-8 | First |
| | 184 | Hridayananda Das (Mm) | 20-2 | First |
| | 185 | Madhabram Das (Mm) | 17-1 | First |
| | 186 | Rajeswar Das (Mm) | 17 7 | First |
| | 187 | Pitambar Das (M) ... | 18-8 | First |
| | 188 | Jogindranath Debnisra (Mm) | 16-2 | First |
| | 189 | Rajanikanta Goswami (Mm) ... | 16-1 | First |
| | 190 | Rebatinath Goswami (Mm) ... | 19 2 | First |
| | 191 | Achyutananda Mahanta (m) ... | 17-4 | First |
| | 192 | Basudeb Misra ... | 18 9 | First. |
| | 193 | Prabinchandra Sarma (M) ... | 19-1 | First |
| | 195 | Jagannath Das . | 19-8 | Second |
| | 196 | Narayanrayan Debgoswami (M) ... | 17-10 | First. |
| | 198 | Surendranath Sarma .. | 18-1 | First |
| | 199 | Bhumidhar Goswami (M) | 19-6 | First |
| | 200 | Bhabendranarayan Raychaudhuri ... | 17-2 | First |
| | 201 | Rothuddin Ahmed ... | 16 | Second |
| | 202 | Afzal Hossain ... | 16-2 | Second. |
| | | **Gauripur P. C. Institution.** | | |
| | 203 | Mobarok Ali Sheikh .. | 23-7 | Second |
| | 204 | Sudhirchandra Bhattacharyya ... | 17-1 | First |
| | 205 | Satyaranjan Biswas (Mm) ... | 17-1 | First. |
| Gau. | 206 | Bipinchandra Das (M) | 19-3 | Second. |
| | 207 | Manindranath Das ... | 18-7 | First. |
| | 208 | Jogendranath Das (m) | 18-1 | First. |
| | 209 | Praphullakumar Das ... | 17-8 | Second. |
| | 210 | Nripendramohan Mitra | 18-1 | Second. |
| | 211 | Birendralal Mukhopadhyay (Mm) ... | 16-2 | First. |
| | 212 | Amritalal Sarkar (Mm) | 17 | First. |
| | 213 | Amalendu Sarkar (Mm) | 16-7 | First |
| | 214 | Atulchandra Baruya ... | 18-1 | Second. |
| | 216 | Anathbandhu Chakrabarti | 16-1 | Second. |
| | 218 | Niradchandra Baruya | 16-10 | First |
| | 220 | Manikchandra Kalita (M) | 17-8 | First |
| | 221 | Sureschandra Ray (M) | 16-2 | First |
| | 222 | Ramnath Sarma ... | 18-2 | Second |
| | 223 | Jibanchandra Medhi (Mm) | 18-1 | First |
| | | **Auniati Kamal Institution.** | | |
| | 224 | Sebakchandra Dalai ... | 19-7 | Second |
| | 225 | Padmadhar Baruya ... | 18-4 | Second |
| | 226 | Dhanakanta Das .. | 16-5 | Second |
| | 227 | Haraballabh Sarma .. | 16-2 | First |
| | 228 | Nagendrakumar Baruya | 16-3 | Third. |
| | | **Naibari Government Aided Gurdon High School.** | | |
| | 231 | Dharmakanta Deka . | 18-7 | Second |
| | 235 | Santanath Misrabhagabati ... | 20-4 | Third |
| | 236 | Rukminnath Sarma .. | 16-10 | First. |
| | 237 | Bhubaneswar Sarma ... | 18-1 | Third |
| | 238 | Dadhiram Das ... | 20-1 | Third. |
| | 240 | Nagendranath Chaudhuri ... | 16 3 | Second. |
| | 242 | Debendranath Sarma | 16 4 | First |
| | 244 | Anandiram Deka ... | 18 1 | Third |
| | | **Female Private Student.** | | |
| Gau. F. P. | 1 | Banulata Lahiri .. ... | | First |
| | | **Private Students.** | | |
| Gau. P. | 1 | Debnath Sarma ... | 25-5 | First. |
| | 2 | Gopendrakumar Das ... | 18-2 | Second. |
| | 3 | Basir Ali .. | 22 3 | First. |
| | 4 | Bhupendranath Barkakati (m) ... | 16 1 | First. |
| | 5 | Md Madarris Alam ... | 18 9 | First |
| | 6 | Ratnadhar Sarma ... | 24-1 | Second |
| | 7 | Hiranyachandra Bora | 23-8 | Second |
| | | **Baniachang H. C. High School.** | | |
| Hab. | *1 | Shark Fakirchand (Mm) ... | 18-8 | First |
| | 2 | Lalitkrishna Deb ... | 17-9 | First |
| | 3 | Pramodmohan Deb ... | 17-7 | First |
| | 4 | Kshetranath Bhattacharyya ... | 23-11 | First. |
| | 5 | Jogendranath Chakrabarti ... | 20-10 | Second. |
| | 6 | Dineschandra Hom (Mm) ... | 18 | First |
| | 7 | Kshetramohan Acharyya | 19-3 | First |
| | 8 | Nagendrachandra Bhattacharyya ... | 20-5 | Second. |
| | 9 | Rameschandra Deb ... | 20-1 | Second. |
| | 10 | Santimay Bhattacaaryya | 18-2 | First |
| | 11 | Bhabaniprasanna Chakrabarti (M) ... | 19-1 | First. |
| | 12 | Kusumkumar Biswas ... | 17 | First. |
| | 13 | Hariipada Bhattacharyya | 18 9 | Second. |

| Roll. | No. | Name | Age. | Division in which the candidate has passed. |
|---|---|---|---|---|
| | | **Habiganj Government High School.** | | |
| Hab. | 14 | Jogendrachandra Bhaumik ... | 16-2 | First. |
| | 15 | Basamay Chakrabarti (M) ... | 18-4 | First |
| | 16 | Debendrachandra Chaudhuri ... | 19-2 | Second |
| | 17 | Gopendranandan Chaudhuri (Mm) ... | 19-8 | First |
| | 18 | Bagalaprasanna Chaudhuri ... | 18-2 | Second |
| | 19 | Labanyakumar Chaudhury (Mm) ... | 16-6 | First |
| | 20 | Atulchandra Chaudhuri (MV) ... | 18 | First |
| | 21 | Jitendralal Das (Mm) | 19-2 | First |
| | 22 | Haranchandra Das .. | 18-1 | First |
| | 23 | Nagendrakumar Das (M) | 17-11 | First |
| | 24 | Hemendrakumar Datta (Mm) ... | 17-1 | First. |
| | 25 | Bankabihari Datta .. | 18-1 | First |
| | 26 | Baikunthanath Deb (M) | 16-9 | First. |
| | 27 | Jogendrachandra De ... | 20-1 | Second |
| | 28 | Jaykumar Deb ... | 17-6 | Second. |
| | 29 | Nagendrachandra De ... | 19 | First |
| | 30 | Subodhchandra De .. | 17-7 | First |
| | 31 | Upendrachandra Pal . | 17-1 | Second |
| | 32 | Mahendranath Pait (Mm) ... | 17-11 | First |
| | 33 | Binaykrishna Purkayastha (m) ... | 18 | First |
| | 34 | Durgoschandra Ray ... | 16-8 | Second. |
| | 35 | Kshirodranjan Ray (Mml) ... | 16-2 | First. |
| | 36 | Ahibhushan Ray (Mm) | 17-1 | First |
| | 37 | Jagatbandhu Ray ... | 17-1 | First |
| | 38 | Bhupendramohan Sinha chaudhuri (Mml) .. | 18-2 | First |
| | 39 | Pareschandra Chaudhuri (Mm) ... | 17-10 | First |
| | 40 | Sailendrakisor Ray (Mm) ... | 16-5 | First |
| | 41 | Nalinikanta Ray (m) ... | 16-7 | First |
| | 43 | Sudhirchandra Das ... | 17-1 | Second |
| | 44 | Satischandra Ghoshchaudhuri ... | 20 2 | Second |
| | 45 | Manindramohan Majumdar ... | 16-2 | First |
| | 46 | Gnindranath Purkayastha ... | 19 1 | Second |
| | 47 | Binodlal Das ... | 20-1 | Second. |
| | 48 | Rabindrakumar Purkayastha ... | 19-6 | Second |
| | 49 | Srinath Ray ... | 17-1 | First |
| | 50 | Chandrakumar Sinha (M) ... | 18-1 | First |
| | 51 | Kesariranjan Sinha ... | 21-4 | First |
| | 52 | Bazlur Rahman Choudhuri (M) ... | 19-2 | First |
| | 53 | Md. Masuad Chaudhury | 22-2 | Second. |
| | | **Shaistaganj H. E. School.** | | |
| | 54 | Mahendrakumar Nag | 17-2 | First. |
| | 55 | Saradakanta Bhattacharyya ... | 20-9 | Second. |
| | 57 | Ramanchandra De ... | 20-3 | Second |
| | 58 | Nageschandra Biswas | 20-4 | Third |
| | 59 | Tripurchandra Sen ... | 17-6 | Second |
| | | **Habiganj Government High School.** | | |
| | 60 | Satyendranath Debtaraphdar ... | 19-6 | Second |
| | 61 | Jitendrachandra Bhattacharyya ... | 20-1 | First. |
| | 62 | Keramat Ullah (Mm) | 17-2 | First |
| | 63 | Nurul Islam ... | 19-1 | First. |
| | 64 | Mahamed Abdul Haye | 16-9 | First |
| | 65 | Abdul Sattar ... | 17-11 | First. |
| | | **Nabiganj J. K. High School.** | | |
| | 67 | Md Abdul Aziz ... | 21-5 | First |
| | 68 | Rameschandra Das (Mm) ... | 17-8 | First. |
| | 69 | Bipinchandra De (Mm) | 18-8 | First. |
| | 70 | Jogendrachandra Pal | 17-2 | Second |
| | 71 | Sashimohan Bhoumik (m) ... | 17-2 | First. |
| | 72 | Satischandra Chakrabarti ... | 20-1 | First |
| | 73 | Prabhatmohan Ghosh (Mm) ... | 18-5 | First. |
| | 74 | Pyarimohan Dhar ... | 17-8 | Second |
| | 75 | Jogendrachandra Biswas ... | 18-11 | First |
| | 77 | Dhaneschandra Chakrabarti ... | 18 2 | First |
| | 78 | Debendrachandra Kar | 17-3 | First. |
| | 79 | Debendrachandra Bhattacharyya ... | 17-11 | First |
| | 80 | Suklal Das | 19 8 | Second. |
| | 82 | Hariabol Das .. | 16-10 | First |
| | 83 | Gopendrachandra De (Mm) . | 18 | First. |
| | 84 | Matilal Banik (Mml) ... | 16-10 | First. |
| | 85 | Atulkrishna Das (Ml) | 18 2 | First |
| | 86 | Kamimkumar De (MLml) ... | 19-10 | First |
| | 87 | Ramanchandra De .. | 18-2 | Second. |
| | 88 | Dhirendralal Chaudhuri | 18 | Second |
| | 89 | Suresranjan Bhattacharyya .. | 20-10 | First |
| | 90 | Gunamani De (Mm) .. | 18-6 | First |
| | 91 | Sailajakanta Sarma (Mml) ... | 18-1 | First |
| | 92 | Baradakanta Das ... | 17 5 | Second |
| | 94 | Nareschandra Chakrabarti ... | 20-2 | Second |
| | 96 | Rairanjan Pal ... | 16 | Second |
| | 97 | Jatindranath Datta ... | 18-1 | First. |
| | 98 | Parbaticharan Biswas | 19-2 | Third |
| | | **Habiganj Government High School.** | | |
| | 101 | Syed Shamsul Hussain | 19-8 | Third. |
| | | **Debrugarh Government High School.** | | |
| | 102 | Abinaschandra Ray (Mm) ... | 17-9 | First |
| | | **Private Student.** | | |
| Hab. P | 2 | Monomohan Chakrabarti ... | 17-8 | First |
| | | **Jorhat Government High School.** | | |
| Jor. | 1 | Sharfuddin Ahmed ... | 19-2 | First |
| | 2 | Anwarul Quadir Mohammed Salihuddin ... | 16 11 | Second |
| | 3 | Basiruddin Ahmed ... | 18 2 | Second |
| | 4 | Osman Goney ... | 17-2 | First |
| | 5 | Md Dilwar Hussain ... | 18 2 | Third |
| | 6 | Jah Ram Das ... | 20-2 | First |
| | 8 | Bhubaneswar Datta ... | 16-7 | First |
| | 9 | Khiresswar Barkakati (M) ... | 18-7 | First. |
| | 12 | Phatikchandra Gogai | 17-2 | Second |
| | 13 | Surendraprasad Khaund | 20-2 | Third |
| | 14 | Kulanath Bhattacharyya ... | 17-3 | Second |

| Roll. | No. | Name. | Age. | Division in which the candidate has passed. |
|---|---|---|---|---|
| | | **Jorhat Government High School.** | | |
| Jor. | 16 | Gangadhar Sarma ... | 19-8 | Second |
| | 17 | Bhubaneswar Kaibarta | 18-8 | Second. |
| | 18 | Harendranath Baruya | 17-2 | Third |
| | 19 | Amulyaranjan Dasgupta (M) ... | 16-5 | First |
| | | **Jorhat Bezbaruya High School.** | | |
| | 21 | Md Bazlur Rahman Farsipara ... | 20-2 | Second |
| | 22 | Chandradhar Datta ... | 18 2 | Second |
| | 23 | Rameswar Bora . | 18-2 | Third |
| | 24 | Anandalal Bordaloi ... | 18-1 | Second |
| | 25 | Kuladhar Baruya ... | 20-11 | Second. |
| | 26 | Someswar Chutia ... | 20-2 | Second |
| | 27 | Jaykanta Datta ... | 17-3 | Second. |
| | 28 | Goleswar Hajarika ... | 17 3 | Second. |
| | 31 | Dhanram Laskar ... | 19-1 | Second |
| | 32 | Sambhunath Sarmaneog ... | 17-2 | Second |
| | 33 | Rajanikanta Sarma ... | 18-7 | First |
| | 34 | Manikchandra Sarma ... | 20-2 | Third |
| | 35 | Upendranath Sarma ... | 16 11 | Second |
| | 36 | Golokchandra Sarma ... | 20-1 | Third |
| | 37 | Mahendranath Sarma | 16-3 | First |
| | 39 | Bholanath Sarmakhaund ... | 18-3 | Third |
| | | **North Lakhimpur Government High School.** | | |
| | 44 | Amiyabhushan Dasgupta (MLml) ... | 16 5 | First |
| | 45 | Hiranath Gogoilahon ... | 17-2 | First |
| | 46 | Gopalsinha Baruya ... | 17-2 | First. |
| | 47 | Bishnuram Datta .. | 21-2 | Second |
| | 48 | Kirtikanta Hajarika (M) ... | 17-2 | First |
| | 50 | Nawram Bara ... | 17-3 | Second |
| | | **Nazira Government Aided High School.** | | |
| | 51 | Harichandra Bhattacharyya | 16-8 | First |
| | 52 | Purnakanta Gohain | 18-2 | Second |
| | 54 | Jajnaram Bardolai | 20 8 | Second |
| | 55 | Pulinchandra Gogoi | 21-3 | Second. |
| | 56 | Lambodar Gogoi | 17-10 | Second |
| | 57 | Kamaleswar Datta | 19-2 | Second |
| | 58 | Shahjamal Ali | 18 8 | Second. |
| | 59 | Alimuddin Ahmed | 17-4 | First. |
| | 60 | Syed Wahur Rahman | 18-2 | Second. |
| | 61 | Syed Lutfar Rahman | 18-3 | Second |
| | | Gyasuddin Ahmed | 17-2 | Second. |
| | | **Sibsagar Government High School.** | | |
| | 66 | Kamalchandra Sarmabarkataki ... | 19-1 | Second. |
| | 67 | Abdul Hamid ... | 17-3 | Second. |
| | | **Jorhat Government High School.** | | |
| | 68 | Sasikisor Ray (Mm) | 16-5 | First |
| | 69 | Gauriprasad Bora (m) | 18-2 | First. |
| | 70 | Kamalakanta Gogoi (Mm) ... | 18 2 | First. |
| | 71 | Debendranath Bhuyan | 16-10 | Second |
| | 72 | Mathuranath Goswami (ml) ... | 17-2 | First |
| | 73 | Jajneswar Sarma (M (ml) ... | 16-5 | First. |
| | 74 | Narayanchandra Sarma (Mm) ... | 18-4 | First. |
| | 75 | Karunadhar Baruya (M) | 17-5 | First. |
| | 76 | Harinath Phukan (m) | 16-2 | First |
| | 77 | Girijadhar Baruya .... | 16-7 | First. |
| | 78 | Hariprasad Khaund ... | 18-3 | Second. |

| Roll. | No. | Name. | Age. | Division in which the candidate has passed. |
|---|---|---|---|---|
| | | **Golaghat Government Bezbaruya High School.** | | |
| Jor. | 79 | Baidyanath Saikia ... | 20-1 | First. |
| | 80 | Kanakchandra Saikia | 21-1 | Second. |
| | 81 | Jogananda Duara .. | 16 3 | First. |
| | 82 | Dambarudhar Gogoi (M) | 19 | Second. |
| | 83 | Lokeswar Gogoi (M) ... | 17 | First. |
| | 84 | Gopikanta Sarma ... | 18-5 | First. |
| | 85 | Pabanchandra Sarma ... | 18-4 | Second. |
| | 87 | Ganeschandra Bora ... | 17-1 | Second. |
| | 88 | Kanakeswar Barthakur | 19 | First |
| | 89 | Ghaneswar Barthakur... | 18 | Second. |
| | 90 | Laksheswar Datta ... | 17 | Third. |
| | 93 | Syed Bahauddin Ahmed ... | 17-1 | Second. |
| | 94 | Syed Abdul Latif (L) ... | 19-2 | First. |
| | | **Sibsagar Government High School.** | | |
| | 95 | Dilawar Hussan Ahmed | 18-1 | First |
| | 96 | Haidar Hussain (M L m) ... ... | 16-1 | First |
| | 97 | Md. Sherajul Islam (m) | 17-9 | First. |
| | 98 | Mahammad Khehlud Din Ahmad ... | 17-1 | First. |
| | 99 | Gauriprasad Kataki (Mm) ... | 16-2 | First. |
| | 100 | Lakshmiprasad Kataki | 18-1 | Second. |
| | 101 | Sibaprasad Kataki (m) | 16-2 | First |
| | 102 | Mahichandra Phukan... | 16-1 | Second |
| | 103 | Panchanan Kakati .. | 16-1 | Second. |
| | 105 | Mahichandra Miri (m) | 18-1 | First |
| | 106 | Balaram Gogoi ... | 20-1 | Second |
| | 108 | Bhudhar Thakur ... | 17-1 | Second. |
| | 109 | Tileswar Mahanta (M m) ... | 16-1 | First |
| | 110 | Sarukan Chutia ... | 19-9 | Second. |
| | 111 | Atulchandra Phukan ... | 18-8 | Second |
| | 113 | Gangadhar Baruya ... | 17-1 | Second. |
| | 115 | Prabhatchandra Das ... | 20-6 | Second. |
| | 116 | Bipinchandra Baruya | 17-2 | Second |
| | 117 | Ajitkumar Ghosh ... | 17-1 | Second. |
| | 118 | Surendrakumar Bhattacharyya ... | 19-1 | Second. |
| | 119 | Radhabinod Bhattacharyya ... | 18 | First |
| | 120 | Rabindranath Raychaudhuri ... ... | 18-1 | Second |
| | 121 | Ramranjan Bhattacharyya ... | 18-1 | First |
| | 124 | Basantakumar Datta ... | 16-2 | First |
| | 126 | Manomohan Deb (M m) | 18-3 | First. |
| | | **Sibsagar Bezbaruya Government Aided H. E. School.** | | |
| | 127 | Bhabakanta Datta ... | 19 | Second. |
| | 135 | Sk. Tamizuddin Ahmed | 17-8 | Third |
| | 137 | Motiuddin Ahmed(M) | 17 | Second. |
| | | **Jhanji High School.** | | |
| | 138 | Kaliprasad Sarmapujari ... | 17 11 | Second. |
| | 139 | Mukutchandra Sarmabhattacharyya ... | 16-4 | Third. |
| | 140 | Jajneswar Baruya ... | 16-2 | Second. |
| | 141 | Mohenchandra Sarma | 19-3 | Third. |
| | | **Golaghat Government Bezbaruya High School.** | | |
| | 145 | Praphullachandra Gogoi | 19 | Third. |
| | | **Tezpur Government High School.** | | |
| | 146 | Radhikaprasad Dowera (M m) ... | 19-3 | First. |

| Roll. | No. | Name. | Age | Division in which the candidate has passed. |
|---|---|---|---|---|
| | | **Private Students.** | | |
| Jor. P. | 1 | Biswoswar Phukan ... | 19-4 | Second |
| | 2 | Surendranath Sarma ... | 21-3 | First. |
| | 3 | Sukomal Saikia ... | 20 | Second |
| | 4 | Susiranjan Ghoshchaudhuri ... | 21-2 | Second |
| | 5 | Kesabchandra Datta ... | 18 2 | Second |
| | 6 | Golapchandra Sarmakhaund ... | 18-6 | Second. |
| | | **Shillong Government High School.** | | |
| Shi. | 1 | Gole Brooke Lettiwick Beatson ... | 20-2 | First |
| | 3 | Let. Wood Jendrick ... | 21-8 | First. |
| | 4 | Raimohan Leonis Gunwille ... | 19 | Second. |
| | 5 | U. Pilkingson Lyngdoh | 20 | First |
| | 6 | Leonidas Sumer ... | 18-10 | First |
| | 7 | Logan Ryan .. | 20 | Third |
| | 8 | Dewarme Son ... | 19 | Second |
| | 10 | U. Wesleyson Sootinck | 19-4 | Second |
| | 11 | Lastosingh Dungdoh (M m G) .. | 16 8 | First |
| | 12 | Emlyn Mohon Roy ... | 16-8 | First |
| | 13 | Henry Cotton (m) ... | 19 | First |
| | 14 | Sando Lin (M m G) .. | 18-2 | First. |
| | 17 | Arthurie Well ... | 18-2 | Second |
| | 18 | Grandwill | 19-2 | Third. |
| | 19 | Weklynton .. | 18-1 | Second |
| | 20 | Lokendro ... | 18-1 | Second. |
| | 21 | Odo Steinherr ... | 18-2 | Second |
| | 22 | Fredrick Shylla ... | 17-11 | First. |
| | 25 | U Harington (M m) ... | 18-2 | First |
| | 26 | Nabu Roy (Thabah) (M m) ... | 20 | First |
| | 27 | Obell Roy (M m) ... | 19-2 | First |
| | 28 | Browndro Lyngdoh (m) | 19-7 | First. |
| | 32 | Durra Chawngthu (m) | 17-3 | First |
| | 33 | Sarchhunga Sailo ... | 19-2 | Second |
| | 34 | Rajendranath Kemfraisa ... | 18-5 | Third |
| | 35 | Mayangnokcha Ao (M m) ... | 18 10 | First |
| | 36 | Bhupal Singh Chettri | 17-7 | First |
| | 37 | Abul Hussain Md Abdulla Choudhury | 16-4 | Second |
| | 38 | Yakub Ali (m) ... | 18-7 | First |
| | 39 | Nabakumar Mukhopadhyay ... | 19-1 | First. |
| | *40 | Sailajasankar Bagchi (M V m) ... | 18-2 | First |
| | 41 | Sateyendrakumar Chakrabarti (m) ... | 16-9 | Second. |
| | 42 | Nibaranchandra Dhar | 16-10 | First |
| | 43 | Kusdeb Mukhopadhyay (m) ... | 19 1 | First. |
| | 44 | Niranjan Dasgupta (M m) .. | 21 3 | First. |
| | 45 | Binaykumar Dasgupta (M m M c) ... | 16-5 | First |
| | 46 | Nitaipada Madhabi (M m) ... | 16-6 | First |
| | 47 | Gaurapada Madhabi (M m) ... | 18-2 | First |
| | 48 | Bibhutibhushan Das (M m) ... | 16-5 | First. |
| | 49 | Prasantakumar Dattachaudhuri ... | 16 1 | Second |
| | 50 | Haripada Datta ... | 17 | Second |
| | 52 | Jitendrakumar Senapati ... | 17-3 | Second. |
| | | **Female Private Students.** | | |
| Sil. F. P. | 2 | Daisy Andrew ... | ... | Second |
| | 3 | Rajaniprabha Das ... | ... | First. |
| | 6 | Theodora Swett ... | ... | Second. |

| Roll. | No. | Name. | Age | Division in which the candidate has passed. |
|---|---|---|---|---|
| | | **Private Student.** | | |
| Shi. P. | 1 | R Sultan Singh ... | 18 1 | Second |
| | | **Silchar Government High School.** | | |
| Sil. | 1 | Nareschandra Bhattacharyya (m) | 17 1 | First |
| | 2 | Manmohan Das (m) ... | 17 | First. |
| | 3 | Amulyacharan Datta ... | 17-1 | First |
| | 4 | Lakshmicharan Datta (M m) ... | 17-1 | First. |
| | *5 | Binaykrishna Dattaray (M V m l) ... | 16-5 | First |
| | 6 | Sirischandra Gupta (M L m) ... | 18-2 | First. |
| | 7 | Sudhansukumar Mitra (m) ... | 16-2 | First |
| | 8 | Jogeschandra Patni ... | 16-3 | First |
| | 9 | Brindabanchandra Saha | 17-4 | Second |
| | 10 | Janakimohan Saha ... | 16 | First. |
| | 11 | Santoshlal Saha (M) ... | 17-11 | First. |
| | 12 | Haridas Sinha (M m l) | 16-11 | First |
| | *13 | Subodchandra Datta (H) .. | 18 8 | First. |
| | 14 | Sudhansumohan Sen ... | 17-7 | First. |
| | 15 | Sisirkumar Bal ... | 16-9 | First. |
| | 16 | Bireschandra Das (M l) | 16-8 | First |
| | 17 | Sureschandra Das ... | 17-2 | Second |
| | 18 | Pareschandra Datta (M) | 16-3 | First. |
| | 19 | Jagadisprasad De ... | 16-11 | Second |
| | 20 | Amritalal Deb ... | 17-2 | Second |
| | 21 | Pramodchandra Dhar | 17-1 | Second. |
| | 22 | Sudhansukumar Nag ... | 16-1 | Second. |
| | 23 | Harendrakumar Swami | 18-7 | Second |
| | 25 | Md. Wali Ulla ... | 17-4 | First |
| | 26 | Malik Muhammad Laskor ... | 16-7 | First |
| | 27 | Reasat Ali Choudhury | 17-7 | First |
| | | **Silchar Narsing High School.** | | |
| | 28 | Gopalchandra Bandyopadhyay (M m) ... | 16-2 | First |
| | 29 | Girindrakumar Pal ... | 18 | First. |
| | 30 | Narendrachandra Pal ... | 17-4 | First. |
| | 31 | Jitendralal Datta (M m) | 17-5 | First |
| | 35 | Jitendranath Adhikari (m) ... | 19-2 | First. |
| | 38 | Prasantachandra Bhattacharya ... | 19-11 | Second. |
| | 39 | Susilchandra Chakrabarti ... | 16-2 | Second |
| | 40 | Sirischandra Deb ... | 17-6 | Third. |
| | 41 | Sureschandra Deb ... | 18 | Third. |
| | 45 | Prabodhmohan Datta | 17-4 | Second. |
| | 46 | Charitranath Kar ... | 20-8 | Third. |
| | 47 | Srischandra Adhikari | 19-8 | Third |
| | 48 | Himansukumar Das ... | 18 | Second. |
| | 49 | Asaddar Ali ... | 18-8 | First |
| | 50 | Mahammad Hamzah ... | 21-8 | Second |
| | 53 | Hafizur Rahaman ... | 18 8 | Third |
| | 54 | Tarimuz Ali ... | 19-3 | Second |
| | | **Hailakandi V. M. High School.** | | |
| | 56 | Mahendrachandra Chaudhuri (M m) ... | 17-1 | First |
| | 57 | Jagadischandra Das (M) | 16-7 | First |
| | 58 | Rameschandra Deochaudhuri ... | 17-6 | First |
| | 59 | Kulachandra Namasudra (M m) ... | 17-5 | First. |
| | 60 | Bishnuprasad Nath (m) | 16 8 | First. |
| | 61 | Lalitmohon Sarmalaskar (M V l) ... | 18 | First |
| | 62 | Aswinikumar Sil (M m) | 17-2 | First. |

| Roll. | No. | Name. | Age. | Division in which the candidate has passed. |
|---|---|---|---|---|
| | | **Hailakandi V. H. High School.** | | |
| Sil. | 64 | Gopeschandra Chakrabarti | 18 2 | Second. |
| | 66 | Nalinibhushan Dasgupta | 19 8 | Second. |
| | 68 | Haranath Debchaudhuri | 17-1 | Second. |
| | 70 | Digindrachandra Nath | 21-2 | Third. |
| | 71 | Dulalchandra Nath ... | 19-1 | Second |
| | 73 | Abdul Kadir Laskar ... | 18-1 | Third. |
| | 76 | Akloo Mesh Choudhuri | 17-1 | First |
| | 77 | Momtazali Mazarbhuya | 20-2 | Second |
| | 78 | Rajabali Mazumdar (M m) ... | 17-2 | First. |
| | | **Female Private Students.** | | |
| Sil F. P. | 1 | Labanyaprabha Ray (M) ... ... | | First |
| | 2 | Subarnalata Kar ... ... | | Third |
| | 4 | Sushamabala Dasgupta ... | | Second |
| | 5 | Suralabala Sarkar ... .. | | First |
| | 6 | Pankajini Patra ... ... | | Second. |
| | | **Private Student.** | | |
| Sil P. | 1 | Janakijiban Sen .. | 19-10 | Second |
| | 2 | Ismail Ali ... | 22-2 | Third. |
| | | **Sylhet Raja Girischandra High School.** | | |
| Syl. | *1 | Debajyoti Barman (M m l) ... ... | | First |
| | 2 | Sureschandra Das (M m) ... | 17-2 | First |
| | 3 | Charuchandra Chaudhuri (M m) ... | 17-11 | First. |
| | 4 | Kamendrakumar Chaudhuri ... | 16-11 | First |
| | 5 | Amiyakanti Datta (m) | 17-1 | First |
| | 6 | Sasankamohan Das ... | 16-2 | First. |
| | 7 | Kausikranjan De ... | 18 2 | Second. |
| | 8 | Girindrakumar De ... | 18-2 | First. |
| | 9 | Sajibchandra Debchaudhuri ... | 20-9 | First |
| | 10 | Niradacharan De ... | 17-2 | First. |
| | 11 | Binodbihari Chakrabarti ... | 19-9 | Second |
| | 12 | Rabindranath Das ... | 16-8 | Second |
| | 13 | Rakesranjan Debchaudhuri ... | 18-8 | Second |
| | 14 | Anilkumar Misra ... | 16-9 | Second. |
| | 17 | Haranchandra Sengupta | 19-11 | First |
| | 20 | Jitendramohan Das ... | 17 | Third. |
| | 21 | Arabindaprakas Deb | 20-8 | Second |
| | 23 | Jogendrachandra De ... | 17-1 | Second |
| | 26 | Prabhatkusum De .. | 17-8 | Second |
| | 27 | Tarakisor Purkayastha | 18-2 | First |
| | 28 | Jogendrakumar Das ... | 17-6 | Third |
| | 31 | Nareschandra Chaudhuri ... | 18-2 | Second |
| | 32 | Manoranjan De .. | 18-2 | Third |
| | 33 | Prannath Gupta Chowdhuri ... | 21-1 | Second. |
| | | **Sylhet Maulvi Bazar Government High School.** | | |
| | *35 | Rameschandra Bhattacharyya, I (M m l) | 18 | First. |
| | 36 | Rameschandra Bhattacharyya, II ... | 18-1 | First. |
| | 37 | Tareschandra Bhattacharyya (M V m) ... | 17 9 | First. |
| | 38 | Jatindramohan Bhattacharyya (m) ... | 18-3 | First. |
| | 39 | Surendrakumar Das (m) | 19-6 | First. |
| | 40 | Debendranath Dam (M m l) ... | 21-2 | First. |
| | | **Sylhet Maulvi Bazar Government High School.** | | |
| Syl. | 41 | Satyeschandra Deb (M m l) ... | 16-8 | First. |
| | *42 | Manindramohan Deb (M L V ml) ... | 17-2 | First |
| | 43 | Sudhirchandra Deb (M m) | 16-6 | First. |
| | 44 | Dwarakanath De ... | 18-6 | Second |
| | 45 | Tarinikumar Deb ... | 18-1 | Second |
| | 46 | Prabhatkumar Dechaudhuri ... | 17-1 | First |
| | 47 | Kiranchandra Gupta ... | 18-2 | First |
| | 48 | Digendrakumar Gupta (m) ... | 18-8 | First |
| | 49 | Jyotish Chandra Kar ... | 17 | Second |
| | 50 | Kailaschandra Pal (m) | 17-1 | First. |
| | 51 | Rajendrakumar Purkayastha ... | 17-8 | First. |
| | 52 | Binaybhushan Sen ... | 17 4 | First |
| | 53 | Lalitmohan Ray ... | 18-7 | Second |
| | 54 | Subodhlal Sen (M) ... | 18-5 | First. |
| | 55 | Abanikanta Bhattacharyya ... | 16-1 | Third |
| | 56 | Praphullakumar Bhattacharjyya ... | 22 10 | Second |
| | 58 | Satischandra Biswas ... | 17-1 | Second |
| | 59 | Satyesranjan Biswas ... | 17-8 | First |
| | 60 | Mahammed Abdus Satter, II (l) ... | 20-1 | First. |
| | 61 | Mahammad Shatir (l) | 18 | First. |
| | 63 | Syed Abdul Mannan | 18-1 | Second |
| | 64 | Abdul Bashar Majiruddinahmed Choudhury (l) ... | 18 | First. |
| | 65 | Abdus Satter, I (l) ... | 17-2 | First. |
| | 66 | Md. Abdur Razaque Mazumder ... | 17-1 | First. |
| | 67 | Syed Zahur Ali (m l) ... | 17-10 | First. |
| | 68 | Akhlakul Ambia Chaudhury ... | 20-6 | Second |
| | 69 | Syed Abdus Sabur ... | 21-7 | Third |
| | | **Bhadeswar H. E. School.** | | |
| | 71 | Binodbihari Das ... | 19-6 | Second |
| | 72 | Dinanath Das ... | 18-9 | Second |
| | 75 | Muhammad Ahmad Choudhuri (M l) ... | 16-4 | First. |
| | 76 | Basir Uddin Ahmad Chaudhuri (m l) ... | 16-5 | First. |
| | 77 | Mahammed Sanawar (m) ... | 21-9 | First. |
| | 78 | Abdul Mannan Chaudhury ... | 16 | Third. |
| | 79 | Abdul Mojib Chaudhury (m) | 16-3 | First. |
| | 82 | Manuruddin Ahmed .. | 16 | First |
| | 83 | Asder Ali ... | 18-1 | First |
| | 84 | Hilal-uddin Ahmed Choudri ... | 19-1 | Second. |
| | | **Sylhet Raja Girischandra High School.** | | |
| | 87 | Gopendrakumar Chaudhuri (m l) ... | 16 6 | First |
| | 88 | Dwijendrakumar Dhar (l) ... | 18-1 | First. |
| | 89 | Kshetranath Dhar ... | 19-4 | First |
| | 90 | Kshitischandra Bhattacharyya ... | 17-1 | Second. |
| | | **Panchakhanda Haragobinda High School.** | | |
| | 94 | Krishnamay Pandit ... | 19-1 | Second. |
| | 96 | Mamtaz Ali ... | 18 2 | Second. |
| | 97 | Imdadur Rahaman ... | 16-5 | First. |
| | 98 | Muhibali (M m) ... | 17-8 | First. |
| | 100 | Debendrakumar De (M) | 18-5 | First. |

| Roll. | No. | Name. | Age. | Division in which the candidate has passed. |
|---|---|---|---|---|
| | | **Panchakhanda Haragobinda High School.** | | |
| Syl. | 101 | Kailaschandra Nath (m l) ... | 18-2 | First |
| | 102 | Ramsaday Bhattacharyya ... | 17-7 | Second. |
| | 103 | Hiranmay Bhattacharyya ... | 16-6 | First |
| | 104 | Srischandra Dhar (M) | 17-8 | First |
| | 105 | Nalinimohan Sarma ... | 17-2 | Second |
| | 108 | Jogendranath Chakrabarti ... | 18-2 | Second. |
| | | **Kagimganj Government High School.** | | |
| | 111 | Saurischandra Acharyya ... | 17-9 | First |
| | *112 | Bamadeb Bhattacharyya (M L m l) ... | 16-6 | First. |
| | 113 | Narendrakumar Bhattacharyya ... | 20-10 | First |
| | 114 | Gopeschandra Chakrabarti ... | 19-2 | Second |
| | 115 | Anadikumar Chaudhuri (m) ... | 18-2 | First |
| | 116 | Pramodchandra Chaudhuri ... | 16-6 | First |
| | 117 | Atulchandra Das ... | 18-4 | Second |
| | 118 | Girischandra Das (M V m l) ... | 18-2 | First |
| | 120 | Parbaticharan Das .. | 18-9 | Second |
| | 121 | Surendrachandra Das (M L V m l) ... | 16-2 | First |
| | 122 | Umeschandra Das ... | 16-3 | First. |
| | 123 | Rajendrachandra Daspurkayastha ... | 19-3 | First |
| | 124 | Nagendrakumar De (M m l) ... | 17-8 | First |
| | 125 | Narendrachandra De (m) ... | 18-3 | First |
| | 126 | Birendrachandra Das (m) ... | 17-8 | First |
| | 127 | Satindrachandra Das ... | 17-7 | Second |
| | 129 | Priyabrata Raykundu | 18 2 | Second. |
| | 130 | Jitendranath Sarma ... | 18 1 | First |
| | 131 | Abdul Mannan ... | 17-1 | Second |
| | 132 | Abdul Latiff Chowdhury (M) ... | 18-2 | Second |
| | *133 | Mahammad Ayub Ali (M L m l) . | 16 8 | First |
| | *134 | Jamshid Ali (M L m l) | 19 | First. |
| | 135 | Manowar Ali ... | 21-8 | First |
| | | **Sylhet Raja Girischandra High School.** | | |
| | 138 | Nripendrakumar De | 19-2 | Second. |
| | 141 | Sukhamay Bhattacharyya ... | 17-7 | First |
| | 142 | Harakumar Datta ... | 19-1 | Second. |
| | | **Sylhet Government High School.** | | |
| | 143 | Manoranjan Das (M m l) | 18 7 | First |
| | 144 | Bijaykrishna Chakrabarti (M) ... | 17-8 | First. |
| | 145 | Benimadhab Taraphdar (M) ... | 18-7 | First |
| | 146 | Ambikacharan Sarmachaudhuri ... | 17 | Second. |
| | 147 | Hridaynath Nath (M m) | 19-9 | First. |
| | 148 | Achintabhushan Majumdar (M) ... | 16-3 | First. |
| | 149 | Supatiranjan Das ... | 19 | Second. |
| | 150 | Binodbihari Gupta (M) | 17-1 | First. |
| | 151 | Dineseranjan Dattachaudhuri (M) ... | 16-9 | First |
| | 152 | Kumudbandhu Sengupta (M) ... | 16-1 | First |
| | 153 | Upendrakumar Chakrabarti (M) ... | 17-2 | First. |

| Roll. | No. | Name. | Age. | Division in which the candidate has passed. |
|---|---|---|---|---|
| | | **Sylhet Government High School.** | | |
| Syl. | 154 | Saileschandra Haldar (M m) ... | 17-8 | First |
| | 155 | Manomohan Ray ... | 17 | First |
| | 156 | Kedarnath Chattopadhyay ... | 16 | Second. |
| | 157 | Jatindrachandra Chaudhuri (M) ... | 18-1 | First. |
| | 158 | Jyotibhushan Chaudhuri ... | 19-3 | Second |
| | 159 | Sudhirchandra Gupta (M) ... | 17-1 | First |
| | 160 | Dineschandra Saha ... | 16-2 | Second |
| | 161 | Birendranath Sen (M m Mc) ... | 18-3 | First. |
| | *162 | Samarjit Sinha (M m) | 16-3 | First |
| | 163 | Amarendrachandra Syam ... | 17 | First |
| | 164 | Jajnendrabhushan Pal (M m) .. | 18-1 | First |
| | 165 | Chittaranjan Dasgupta, ... | 18-3 | Third |
| | 166 | Gurudas Purkayastha | 16-11 | Second. |
| | 167 | Siddheswar Bandyopadhyay ... | 16-6 | First. |
| | 168 | Muhammed Monowar (M V m) ... | 17 | First |
| | 169 | Mahammed Abul Hasan (M) ... | 17-2 | First |
| | 170 | Saiful Alam Khan ... | 18-3 | First |
| | 171 | Muhammed Suleiman Khan (M m) ... | 16 | First. |
| | 172 | Asaduzzaman Choudhuri (M m) ... | 16-4 | First |
| | 173 | Md Abdus Subhan (m) | 19-4 | First |
| | 174 | Sikandar Ali (M) ... | 21-1 | First |
| | 175 | Mirza Abdul Majid ... | 17 1 | Second. |
| | 176 | Abdul Matlib (m) ... | 17-1 | First |
| | 177 | Ahmed Ali ... | 18-2 | Second |
| | 178 | Abdur Roaf Chaudhury (l) ... | 16-10 | First |
| | 179 | Syed Maqsood ... | 18-7 | First. |
| | 181 | Arman Ali Choudhury | 18-3 | Second |
| | 183 | Sojadur Rahman Choudhuri ... | 16-8 | Second. |
| | 184 | Chandramohan Namasudra ... | 18 1 | Second |
| | 185 | Jyotischandra Dasgupta ... | 20-2 | Second |
| | 186 | Rakeschandra Bhattacharyya ... | 18-8 | Second |
| | 187 | Jitendrakumar Nandi | 19 | Third |
| | 188 | Amiyaprasanna Chakrabarti ... | 16-7 | First. |
| | 189 | Ramapati Chakrabarti | 19 10 | Second |
| | 190 | Manindrakumar Nandi (m) ... | 17 | First |
| | 191 | Mahendrakumar De (M) | 17-1 | First |
| | 192 | Jatindramohan Chaudhuri ... | 18-1 | First |
| | 193 | Pramodkumar Das (Mm) | 18-9 | First. |
| | *194 | Bibhutibhushan Gupta (Mml) ... | 16 | First |
| | *195 | Binodbihari Biswas (Ml.ml) ... | 17 | First |
| | 196 | Paresnath Niyogi ... | 16-9 | First |
| | | **Sylhet Raja Girischandra High School.** | | |
| | 197 | Sisirkumar Das ... | 18-1 | Second. |
| | 198 | Satishchandra Deb .. | 16-10 | First. |
| | 199 | Nagendrakumar Chaudhuri ... | 17-7 | First |
| | 201 | Pramathanath Tarat ... | 18-7 | Second |
| | 202 | Bidhubhushan Pal ... | 16-8 | Third |
| | 207 | Afzal Ali Choudhury | 16-11 | Second. |
| | 209 | Abdul Hamid ... | 19-8 | Third. |
| | 215 | Abdus Sattar ... | 19-5 | Third. |

| Roll. | No. | Name. | Age. | Division in which the candidate has passed |
|---|---|---|---|---|
| | | **Sunamganj Jubilee High School.** | | |
| Syl. | 217 | Ali Farid Ahmed ... | 18-6 | First |
| | 218 | Dewan Mohammed Ansuf Chowdhury | 17-7 | Second |
| | 222 | Syed Insafali ... | 17-8 | Second |
| | 223 | Jatindramohan Chaudhuri ... | 18-6 | Second |
| | 225 | Kailaschandra Das ... | 17-2 | First |
| | 226 | Krishnamohan Banik | 18-6 | Second |
| | 228 | Surendrakumar Chakrabarti ... | 17-2 | Third |
| | 229 | Pramadamohan Chaudhuri ... | 17-11 | Second |
| | 230 | Brahmananda Das ... | 18-2 | Second |
| | 231 | Hemendrakumar Bhattacharyya | 16-2 | First |
| | 232 | Trailokyanath Bhattacharyya (M m) ... | 17 10 | First. |
| | 233 | Pramodlal Basu (M m l) ... | 17-11 | First |
| | 234 | Manoranjan Chakrabarti (M) | 17-2 | First |
| | 235 | Amlkumar Chattopadhyay (m) ... | 16 | First |
| | 236 | Chandrakisor Chaudhuri .. | 17 2 | First |
| | 237 | Rameudubhushan Chaudhuri (m) ... | 17 5 | First |
| | 239 | Basantakumar Das ... | 19-2 | First |
| | | **Karimganj Nilmani H. E. School.** | | |
| | 241 | Kumudbandhu Deb (M m) .. | 17 10 | First. |
| | 242 | Manindranath Das (L m l) .. | 17-2 | First |
| | 243 | Gopeschandra Das (M L m l) ... | 17 7 | First |
| | 244 | Rasaraj De ... | 16-10 | First |
| | 245 | Suryyamani Das (m) .. | 17-8 | First |
| | 246 | Rukminikanta Datta ... | 16 8 | Second |
| | 251 | Rameschandra Ray | 20 11 | Second |
| | 255 | Praphullachandra Daspurkayastha ... | 19 2 | Third |
| | 257 | Shamsuddin Ahmed Chowdhury (L) ... | 17 | Second |
| | 258 | Md. Nazir Ali ... | 19-5 | Second |
| | 259 | Yakub Ali ... | 19 2 | First |
| | | **Sunamganj Jubilee High School.** | | |
| | 260 | Kaliprasanna Das ... | 16-9 | First |
| | 261 | Pyarimohan Das ... | 18-2 | First |
| | 262 | Sureschandra Das ... | 16-1 | First |
| | 263 | Amiyamukul De (Mm) | 17 2 | First. |
| | 264 | Upendrakumar De (M) | 20 1 | First |
| | 265 | Kotakiranjan Goswami | 16 2 | Second |
| | 266 | Chandrakumar Ray (M L V m l) ... | 18 2 | First |
| | 267 | Kalyanbrata Ray (M) | 16-2 | First |
| | 269 | Rasamay Raychaudhuri (M m l) ... | 18 2 | First. |
| | 271 | Naresnath Ray ... | 17 8 | Second |
| | 272 | Nagendranath Ray ... | 19-1 | Third |
| | 273 | Niradkrishna Das ... | 16 1 | Second |
| | 275 | Ambikacharan De ... | 17 1 | Third |
| | 276 | Ramanimohan De ... | 18 4 | Second |
| | 278 | Sachinandan Kundu ... | 16-2 | Second. |
| | 280 | Dhirendrasankar Ray | 17-1 | First. |
| | 281 | Jasodalal Ray ... | 17 2 | Second |
| | 282 | Narendranath Sen ... | 20-2 | Second |
| | 283 | Abdul Mannan ... | 20-1 | Third |
| | | **Tarpur Government High School.** | | |
| | 284 | Sukheschandra Chaudhuri ... | 19-1 | Second. |

| Roll. | No | Name. | Age. | Division in which the candidate has passed. |
|---|---|---|---|---|
| | | **Sylhet Government High School.** | | |
| Syl. | 287 | Binodbihari Chakrabarti ... | 16-3 | Third |
| | 288 | Upendrachandra Basu | 17-1 | Second. |
| | 292 | Kalipada Gupta ... | 17-2 | Second |
| | 294 | Jitendranath Das ... | 19 | Second. |
| | | **Female Private Students.** | | |
| Syl. F. P. | 1 | Mrinmayi Das (M m) . | | First |
| | 2 | Sneholata Majumdar ... | . | Third. |
| | 4 | Suhasini Debi ... | . | First. |
| | | **Private Students.** | | |
| Syl. P. | 1 | Adharchandra Pal . | 18 1 | Second |
| | 2 | Bhupendrachandra Dechaudhuri ... | 19-4 | Second |
| | 3 | Pradyotkumar Sen ... | 18-9 | Second |
| | 4 | Hrishikes Biswas ... | 18-7 | Second. |
| | 5 | Bidhimanjan Bhattacharyya ... | 19 | Second |
| | 6 | Dhirendrakrishna Chakrabarti ... | 18 | Second. |
| | 7 | Mohiuddin Ahmed Chowdhury ... | 17-9 | Third |
| | 8 | Syed Aosaful Hussain | 23-7 | First |
| | 11 | Dhirendranath De .. | 17 6 | First |
| | 12 | Irshad Ali .. | 18-2 | Second |
| | 13 | Suchandrakumar Biswas | 18-1 | Second |
| | 15 | Girindra Mohan Bhattacharyya ... | 25 | Third |
| | 16 | Manoranjan Datta ... | 16-8 | Second |
| | | **Kailasahar Radhakisor Institution.** | | |
| Agar. | 1 | Madhusudan Chakrabarti (M m) ... | 16-3 | First |
| | 2 | Kshetramohan Datta | 19-3 | Second |
| | 3 | Ramanikanta Bhattacharyya (M m l) .. | 18-1 | First. |
| | 4 | Nareschandra Barmanray ... | 21 | First |
| | 5 | Rameschandra Bhattacharyya (m) ... | 18 2 | First |
| | 6 | Thaiba Sinha ... | 20-1 | First |
| | 7 | Babuchand Sinha (M)... | 17-6 | First |
| | 8 | Krishnakamal Arjun ... | 17 1 | Second |
| | 9 | Ramchandra Sinha ... | 21-2 | Second |
| | 11 | Pareschandra Kar ... | 19-9 | Second |
| | 12 | Syamapada Sarkar ... | 17-10 | First |
| | 13 | Radharaman Sinha ... | 18 | First |
| | 14 | Dwarakaprasad Deb ... | 17-6 | Second |
| | 15 | Abdur Rahim ... | 19-1 | First |
| | 16 | Mahammad Hakim ... | 19 3 | Second |
| | | **Belonia Brajendrakisor Institution.** | | |
| | 17 | Prasannakumar Pal ... | 17-8 | First |
| | 18 | Debendranath Dhar (m) ... | 18-4 | First. |
| | 19 | Debendrakumar Majumdar ... | 16-1 | First. |
| | 20 | Balkunthachandra Baidya ... | 17-2 | First. |
| | 21 | Haranath Nag (V) ... | 16-10 | First |
| | 22 | Nisikanta Mallik ... | 17-8 | First. |
| | 23 | Harendrakumar Biswas | 19-3 | Second. |
| | 24 | Surendrakumar Majumdar ... | 16-2 | First. |
| | 25 | Ali Ahmed ... | 16 4 | First. |
| | 26 | Syedar Rahaman (V) ... | 19-2 | First. |
| | 27 | Ramsagar Nath ... | 20-9 | Second |
| | | **Agartala Umakanta Academy.** | | |
| | 29 | Mangal Sinha ... | 21-2 | Third. |
| | 30 | Kumudbandhu Bhattacharyya ... | 17-4 | Second. |

| Roll. | No | Name. | Age. | Division in which the candidate has passed. |
|---|---|---|---|---|
| | | **Belonia Brajendrakisor Institution.** | | |
| Agar. | 31 | Mohinimohan Chakrabarti (M) ... | 16-2 | First. |
| | 32 | Pramodbihari Datta ... | 17-4 | First |
| | 33 | Nripendrachandra Debabarma ... | 19 1 | First |
| | 34 | Purnachandra Jahari (m) ... | 17 6 | First |
| | 35 | Dayalchand Nath ... | 19 1 | First |
| | 36 | Benimadhab Ray (M) | 17 3 | First. |
| | 38 | Gopalchandra Sengupta (m) . | 18-3 | First |
| | 39 | Birendrakumar Bandyopadhyay ... | 17-1 | First |
| | 40 | Gopimohan Chattopadhyay .. | 17-4 | Second |
| | 41 | Niratan Gangopadhyay ... | 18-3 | Second |
| | 42 | Phanindrachandra Majumdar ... | 16-3 | Second |
| | 43 | Sachindrachandra Mukhopadhyay .. | 17-11 | First |
| | 44 | Nripendramohan Sengupta ... | 18-3 | Second |
| | 45 | Mahfuzur Rob ... | 18-7 | Second |
| | | **Dharmanagar Beer Bikram Institution.** | | |
| | 46 | Churakanta Namasudra (V) .. | 17 2 | First. |
| | 47 | Rasiklal Bhattacharyya | 16-10 | Second |
| | 48 | Bhagabati Prasanna Ray ... | 17 | Third |
| | 49 | Adharchandra Pal .. | 19-7 | Second |
| | 50 | Ramdulal Pal ... | 19 9 | Third |
| | 51 | Prabhatchandra Bhattacharyya ... | 18-9 | First |
| | | **Searsol Raj H. E. School.** | | |
| Asan. | *1 | Krishnapada Das (M m l) . | 17-6 | First |
| | 2 | Amarendranath Sinha (m) .. | 16-7 | First |
| | 3 | Amarendranath Mitra (m) .. | 16-7 | First |
| | 4 | Bimalapati Gupta (m) | 16-1 | First |
| | 5 | Bholanath Bandyopadhyay . | 22-4 | First |
| | 7 | Krishnachandra Raychaudhuri (m) .. | 20-5 | First |
| | 8 | Abinaschandra Das ... | 16-9 | First |
| | 9 | Sibaram Mukhopadhyay | 17-1 | Third |
| | 10 | Kamalkumar Das ... | 18 2 | Second |
| | 11 | Tarapada Sarma ... | 20-2 | Second |
| | 16 | Sahadeb Ray ... | 16-8 | Second |
| | | **Asansol E. I. Ry. H. E. Indian School.** | | |
| | *17 | Ramdas Samanta (M m l) ... | 18 10 | First |
| | *18 | Jatindranath Datta (L m) .. | 17 1 | First |
| | *19 | Satyapada Ghosh (M V m) ... | 17-6. | First |
| | 20 | Kamalakshya Chakrabarti (M m) ... | 17-11 | First |
| | 21 | Prabhatkumar Ray (m) | 16-2 | First |
| | 22 | Birendranath Mukhopadhyay (M m) ... | 17 | First |
| | 23 | Anathbandhu Bandyopadhyay (M m) ... | 18 6 | First. |
| | 24 | Asutosh Bandyopadhyay (m) | 22 | First |
| | 25 | Kesabchandra Ghosh (M m) ... | 17-7 | First. |
| | *26 | Radhikaranjan Ray (M V m H) ... | 16-1 | First |
| | 27 | Biswanath Mukhopadhyay (M m H) ... | 16 | First. |
| | | **Asansol E. I. Ry. H. E. Indian School.** | | |
| Asan. | 28 | Sailendranath Ghosh (M m) ... | 16-3 | First |
| | 29 | Umapada Gayan | 16-9 | First |
| | 30 | Gokulkanta Chattoraj | 17 4 | First. |
| | 31 | Sureschandra Gandhi | 18 8 | First |
| | 32 | Praphullakumar Pahit | 18-1 | First |
| | 33 | Manmohan Ghosh (V H) ... | 17-5 | First |
| | 34 | Sibkrishna Bandyopadhyay (M) .. | 16-4 | First |
| | 35 | Anadinath Chattopadhyay (H) .. | 18-11 | First |
| | 36 | Sachindranath Biswas (m) .. | 16-8 | First |
| | 37 | Molook Singh (H) ... | 16-6 | First |
| | *38 | Jamunakisor Ghosh (M m H) .. | 17-3 | First |
| | 39 | Ajitkumar Mukhopadhyay (M m H) ... | 16 6 | First. |
| | | **Kulti McLellan Institution.** | | |
| | 40 | Dhirendranath Chattopadhyay (m) ... | 18 | First |
| | 41 | Tarapada Tapadar (m) | 18 1 | First |
| | 42 | Sailendranath Mukhopadhyay ... | 17-3 | First |
| | 43 | Gaurisankar Tapadar | 18-3 | First |
| | 44 | Raghunath Ray ... | 19-1 | Second |
| | | **Raniganj H. E. School.** | | |
| | 45 | Ramdas Sinha .. | 19 2 | Second |
| | 46 | Pramodkumar Chattopadhyay .. | 18-4 | Second |
| | 47 | Kamalapati Gangopadhyay (m) .. | 16-6 | First |
| | 50 | Nanigopal Mandal .. | 18-5 | Second |
| | 51 | Debtulya Mukhopadhyay (M m) | 16-2 | First |
| | 52 | Sanjaykumar Mukhopadhyay (m) ... | 16-4 | First |
| | 53 | Susilkumar Mukhopadhyay (m) ... | 18-5 | First |
| | 54 | Rasbihari Nandi (m) ... | 18-8 | First |
| | 55 | Santibhushan Sarkar ... | 18 | Third |
| | 56 | Nutbihari Bandyopadhyay ... | 16-1 | First. |
| | 59 | Narendranath Ghosh .. | 25 5 | Second |
| | *60 | Sasankasekhar Mukhopadhyay (M L m Mc) | 16-7 | First |
| | 62 | Sajanikanta Ghatak ... | 16-1 | Second |
| | 63 | Kamalakanta Mukhopadhyay ... | 18-5 | First |
| | 65 | Sasadhar Ray ... | 18 5 | Second |
| | 66 | Nakulchandra Ray ... | 18 4 | Second |
| | 67 | Subodhchandra Mitra | 16-1 | First |
| | 68 | Mirza Taleb Hossain ... | 16-9 | Second. |
| | 69 | Harihar prasad Sinha ... | 18-4 | First |
| | | **Ukhara H. E. School.** | | |
| | 70 | Arabinda Bandyopadhyay (l) ... | 17-4 | First |
| | 71 | Jasodanandan Bandyopadhyay ... | 18 1 | First |
| | 72 | Kamakhyapada Bandyopadhyay ... | 18-2 | First |
| | 73 | Surendralal Baksi (m) | 17 7 | First |
| | 74 | Bimalasankar Chattopadhyay ... | 17 7 | First. |
| | 75 | Sasankasekhar Chattopadhyay (M m l) ... | 16-9 | First |
| | 76 | Gobindadas Datta ... | 16-8 | First |
| | 77 | Pramathanath Ghatak (L l) ... | 17-2 | First |

| Roll. | No. | Name | Age. | Division in which the candidate has passed. |
|---|---|---|---|---|
| | | **Ukhara H. E. School.** | | |
| Asan. | 78 | Kamalakanta Gan ... | 21 | Second |
| | 79 | Syamapada Goswami (M m l) ... | 16-7 | First. |
| | 80 | Sarasijaksha Misra ... | 18-6 | First |
| | 82 | Gaurmohan Ray (M l) | 19-3 | First. |
| | | **Raniganj H. E. School.** | | |
| | 83 | Kripasindhu Mandal ... | 17-10 | First |
| | | **Ethora S. C. Institution.** | | |
| | 84 | Smarajit Raychaudhuri | 16-4 | First |
| | 85 | Nagendranath Sarkar | 19-7 | First |
| | 86 | Tarapada Ray (M m).. | 19-3 | First |
| | 87 | Baubihari Mukhopadhyay .. | 21-7 | Second |
| | 88 | Ramsankar Bhattacharyya .. | 16-2 | First |
| | 89 | Haridas Chakrabarti .. | 19-10 | First. |
| | 90 | Nandalal Marwari .. | 18-2 | First. |
| | 91 | Kalipada Chakrabarti .. | 18-1 | Second |
| | | **Banagram Century Institution.** | | |
| Bagh. | 1 | Jayantakumar Basu (M m) ... ... | 16-1 | First. |
| | 5 | Surendranath Chakrabarti ... | 17-2 | First |
| | 6 | Manoranjan Biswas ... | 16-10 | Second. |
| | 8 | Jitendranath Ray ... | 17-6 | Second. |
| | 9 | Tarinicharan Mridha ... | 21-2 | Second. |
| | 10 | Phabindranath Datta ... | 16 | Second |
| | 11 | Birendranath Datta ... | 16 | First |
| | 12 | Atulchandra Basu ... | 16 9 | Third |
| | | **Chirulia H. E. School.** | | |
| | 15 | Kshitischandra Sarkar | 17 | First |
| | 16 | Jatindranath Som ... | 19 | First. |
| | 17 | Bhujangabhushan Ghosh ... | 18 | Second. |
| | 18 | Saratchandra De .. | 20-10 | Third. |
| | 19 | Saratchandra Sen .. | 22-4 | Second. |
| | 20 | Rajendranath De ... | 17-11 | Second |
| | 21 | Saratchandra Dam ... | 20-7 | First. |
| | 23 | Mollah Mominuddin Ahmed (m) ... | 16-3 | First. |
| | | **Bagerhat H. E. School.** | | |
| | 25 | Phanindrakumar Nag ... | 16-6 | First |
| | 26 | Haripada Guha ... | 16-2 | Second. |
| | 27 | Nirmalchandra Basu ... | 16 5 | First. |
| | 28 | Santoshkumar Guha ... | 17-1 | First |
| | 29 | Kesablal Das (m) ... | 16-4 | First |
| | 30 | Sailendranath Dam ... | 16-4 | First |
| | 31 | Jogendranath Dam (m) | 16-1 | First. |
| | 32 | Syamlal Ghosh (M) ... | 16-2 | First |
| | 33 | Susilkumar De ... | 16-10 | First. |
| | 34 | Upendranath Dam ... | 17-3 | First |
| | 35 | Manoranjan Chattopadhyay ... | 17-3 | First. |
| | 36 | Dhirendranath Biswas | 17-9 | First |
| | 37 | Manindranath Ghosh ... | 19-1 | First. |
| | 38 | Satyajiban Raychaudhuri ... | 17-2 | Second |
| | 39 | Enajeddin Mias ... | 21-7 | Third. |
| | 40 | Jatindranath De ... | 18-6 | Third. |
| | 41 | Jyotischandra De ... | 16-11 | Second |
| | 42 | Kalipada Ghosh ... | 16-5 | Second. |
| | 43 | Sudhirkumar Raychaudhuri (m G) ... | 16-1 | First. |
| | 44 | Pradyotkumar Sarkar | 17 | First |
| | 45 | Anilkumar Nag ... | 16-7 | Second. |
| | 46 | Chunilal Basu ... | 17-9 | Second. |
| | 47 | Mahananda Haldar ... | 16-4 | First. |

| Roll. | No. | Name | Age. | Division in which the candidate has passed. |
|---|---|---|---|---|
| | | **Bagerhat H. E. School.** | | |
| Bagh. | 48 | Anandachandra Pal ... | 18 2 | Second |
| | 49 | Dayamay Chakrabarti | 21-8 | Third |
| | 52 | Kalicharan De ... | 21-2 | Second. |
| | 53 | Anathnath Gangopadhyay ... | 16-3 | First. |
| | 54 | Nepalchandra Mukhopadhyay, I .. | 18-5 | Second |
| | 56 | Banamali Ray ... | 18-2 | Third |
| | 57 | Birendranath Chattopadhyay ... | 16 | Second |
| | 58 | Khagendranath Haldar | 20-1 | Second. |
| | 59 | Nirmalbhushan Ghoshbarman ... | 21-1 | Second |
| | 61 | Nepalchandra Mukhopadhyay, II ... | 17-10 | Second. |
| | 62 | Shaikh Maquesudal Haque ... | 19-6 | Second. |
| | 63 | Emanuddin Ahmad (L) | 18-1 | First. |
| | 64 | Motiar Rahaman Patwari ... | 18 3 | Second |
| | 65 | Basantakumar Pal ... | 21-3 | Third |
| | 66 | Narendranath Raha ... | 22-7 | Third |
| | 69 | Sudhirkumar Nag ... | 17-2 | Third |
| | 70 | Subodhchandra Sengupta ... | 16-1 | First |
| | 71 | Afsarali Howlader ... | 17-8 | Second |
| | | **Masni H. E. School.** | | |
| | 72 | Ramratan Chattopadhyay ... | 16-4 | First |
| | 73 | Jatindranath Chattopadhyay (M) ... | 18 1 | First |
| | 74 | Benimadhab Chattopadhyay ... | 17 | Second |
| | 75 | Niratan Bandyopadhyay ... | 16-5 | First |
| | 77 | Jyotischandra Haldar | 17-1 | Second |
| | 81 | Kartikchandra Das ... | 19-2 | Third |
| | | **Goalmath Union H. E. School.** | | |
| | 82 | Shaikh Esahaque ... | 18-2 | Second |
| | 83 | Sibendranath Chakrabarti ... | 19 | Second |
| | 84 | Rabindranath Chakrabarti ... | 16-8 | First |
| | 85 | Binodbihari Chattopadhyay (M) ... | 16-9 | First |
| | 86 | Sasibhushan Nath ... | 19-4 | First |
| | 87 | Satischandra Nath (M L) ... | 18 1 | First |
| | 88 | Niratan Ray ... | 17-3 | First. |
| | 89 | Susilkumar Bandyopadhyay ... | 17-3 | First |
| | 90 | Kalipada Basu ... | 17-2 | Second |
| | 91 | Sureschandra Chakrabarti ... | 20-2 | Third |
| | 92 | Makhanlal Chakrabarti | 20-3 | Second. |
| | 93 | Indubhushan Ghosh ... | 17-2 | First. |
| | 94 | Jatindranath Ghosh ... | 20-3 | First. |
| | 95 | Jitendranath Sarkar ... | 19-2 | Second |
| | 96 | Bijaybasanta Sen ... | 17-8 | Second |
| | | **Karapara H. E. School.** | | |
| | 97 | Binayendranath Guha (M) ... | 16-2 | First. |
| | 99 | Rasbihari Mandal ... | 18-1 | First |
| | 100 | Saratchandra Nath ... | 19 1 | Second. |
| | 101 | Jatindramohan Pal ... | 20 4 | First. |
| | 102 | Lalitmohan Pal ... | 18-6 | Second |
| | 103 | Bimalchandra Raychaudhuri ... | 16-1 | Second. |
| | 104 | Durgadas Raychaudhuri | 19-3 | Third. |
| | 105 | Hiralal Sarkar ... | 17-2 | Second. |
| | 106 | Harashit Saha (M) ... | 18-2 | First. |

| Roll. | No. | Name. | Age. | Division in which the candidate has passed |
|---|---|---|---|---|
| | | **Karapara H. E. School.** | | |
| Bagh. | 107 | Jyotischandra Saha ... | 18-4 | Second. |
| | 108 | Manindranath Bhadra | 16-7 | First. |
| | 109 | Syamalchandra Ghosh | 18-2 | First |
| | 110 | Haripada Kar ... | 20 1 | Second |
| | 111 | Charuchandra Mitra ... | 17-1 | Second. |
| | 112 | Haridas Raychaudhuri | 23-3 | Second |
| | 114 | Sureschandra Ghosh ... | 19-3 | Second |
| | 117 | Mohammad Sadatah Mia ... | 19 | First |
| | 118 | H Serajuddin Ahamed | 22 11 | First |
| | 120 | Mokhlesuddin Shaikh | 18-10 | Second |
| | 121 | Shaikh Rahamuddin ... | 23-1 | Third |
| | | **Rangdia H. E. School.** | | |
| | 122 | Brajalal Datta (M) .. | 18 7 | First |
| | 123 | Amulyakumar Datta | 17-10 | First |
| | 124 | Surendranath Basu (M) | 18-2 | First |
| | 125 | Binodbihari Sarbajna (M) ... | 19-3 | First |
| | 126 | Jnanendranath Datta | 19 2 | First |
| | 127 | Krishnadas Debnath .. | 16 1 | First |
| | 128 | Kalipada Biswas (M m) | 17 | First |
| | 129 | Benamali Basu (M) ... | 18 | First |
| | 130 | Kshetranath Chakrabarti ... | 17 2 | First |
| | 131 | Rabindranath Daschaudhuri (M m) ... | 18-5 | First |
| | 132 | Aswinikumar Majumdar ... | 19-7 | Third |
| | | **Krishnagar A. V. School.** | | |
| | 133 | Syamadas Nag (M m) | 16-1 | First |
| | | **Masni H. E. School.** | | |
| | 134 | Judhishthir Das .. | 18 6 | Second |
| | | **Pirojpur Government High School.** | | |
| | 137 | Sadananda Biswas . | 21-1 | Second |
| | | **Masni H. E. School.** | | |
| | 138 | Krishnalal Som ... | 17-8 | Third |
| | | **Teacher.** | | |
| Bagh T. | 1 | Shofiuddin Ahmad ... | 23-6 | Second |
| | | **Kotalpur H. E. School.** | | |
| Bank. | 1 | Gobindaprasad Bhuma (m) ... | 18-1 | First |
| | 2 | Harimadhab Basu ... | 17 6 | First |
| | 3 | Chandikumar Chattopadhyay ... | 18-3 | Second |
| | 4 | Birendranath Basu ... | 16-5 | First |
| | 5 | Binaykrishna Basu ... | 16-1 | First |
| | 6 | Madhusudan Bandyopadhyay ... | 18 1 | Second |
| | | **Patrasayar and Bamria Gurudas Institution.** | | |
| | 7 | Nikhileswar Laik ... | 16 1 | First |
| | 8 | Bankimchandra Das ... | 16-11 | Second |
| | 9 | Abinaschandra Datta (m) ... | 18-11 | First. |
| | 10 | Anilkumar Bandyopadhyay ... | 17-2 | Second |

| Roll. | No. | Name. | Age | Division in which the candidate has passed. |
|---|---|---|---|---|
| | | **Patrasayar and Bamria Gurudas Institution.** | | |
| Bank. | 11 | Sristidhar Sarkar ... | 20 | Second |
| | 12 | Radhabinod Datta ... | 19-3 | Second. |
| | 13 | Bhupendranath Biswas | 18-6 | Second |
| | 14 | Binodbihari Datta ... | 16 | Second. |
| | | **Panskura Bradley-Birt H. E. School.** | | |
| | 17 | Mrityunjay Sarkar ... | 17-7 | First |
| | | **Ramsagar H. E. School.** | | |
| | 18 | Kalikrishna Hajra .. | 16-11 | Second |
| | 19 | Brahmapada Mukhopadhyay ... | 18-4 | First. |
| | 20 | Pramodranjan De .. | 16 4 | Second |
| | 22 | Jnanendranath Biswas | 16-8 | First |
| | 23 | Bholanath Ghosh .. | 22 11 | Second |
| | 24 | Sibadas Bandyopadhyay | 17-8 | Second |
| | 26 | Jaminimohan Hajra | 19 4 | Second |
| | 27 | Paritosh Mukhopadhyay .. | 23 1 | Second |
| | 28 | Prahladchandra Chattopadhyay .. | 18-1 | First |
| | 29 | Jagatbandhu Mukhopadhyay ... | 16 2 | Third |
| | 30 | Jagannathprasad Lalla | 17 1 | Third |
| | 31 | Radhasyam Sengupta | 18 9 | Third. |
| | 32 | Indrakumar Chattopadhyay | 18-7 | Second |
| | | **Bankura Zila School.** | | |
| | 33 | Mahomed Rezakarim (M m) . | 16 10 | First |
| | 34 | Nagendranath Chakrabarti (m) .. | 17 4 | First |
| | 35 | Jagatbandhu Ghosh (m) . | 21 | First |
| | 36 | Bandyanath Palit (M) | 17-5 | First |
| | *37 | Ramohan Samanta (M l) ... | 17 3 | First |
| | 38 | Dharandhar Ghatak (m G) ... | 17-5 | First |
| | 39 | Sankarprasad Bandyopadhyay (l) .. | 16 1 | First |
| | 40 | Srikrishna Bandyopadhya ... | 19-1 | Second |
| | 41 | Nitaichand Samanta ... | 18 | First |
| | 42 | Bhupendranarayan Rakshit .. | 16 | Second |
| | 43 | Ramendranath Ghosh | 16-5 | First |
| | | **Kuchiakol Radhaballabh Institution.** | | |
| | 44 | Jugalkisor Adhikari .. | 17 9 | Second |
| | 45 | Praphullakumar Bandyopadhayay .. | 22-1 | Second |
| | *47 | Bhabataran Chakrabarti (M l m l) .. | 17 | First |
| | 48 | Tirtharenu Chattopadhyay ... | 16-4 | First. |
| | 50 | Phanibhushan Chaudhuri (M m) .. | 17 2 | First |
| | 52 | Prahladkinkar De ... | 17 | Second |
| | 53 | Rangobinda Gangopadhyay ... | 17-7 | First |
| | 54 | Debendranath Ghosh ... | 19 2 | Second |
| | 55 | Durgapada Ghosh ... | 22 1 | Second |
| | 57 | Hangeswar Mukhopadhyay ... | 22-11 | Second |
| | 58 | Gourmohan Mandal ... | 21-4 | Second. |
| | 59 | Tarapada Mandal ... | 18-1 | Second |
| | 60 | Bankimchandra Mandal | 18-1 | Third |

| Roll. | No. | Name. | Age. | Division in which the candidate has passed. |
|---|---|---|---|---|
| | | **Kuchiakol Radhaballabh Institution.** | | |
| Bank. | 61 | Parbatinath Mandal (m) | 20 | First. |
| | 63 | Krishnadulal Patra ... | 16-4 | Second. |
| | 64 | Prabhakar Pal ... | 17-7 | Second. |
| | 65 | Amulyaratan Ray ... | 20-7 | First |
| | 66 | Motilal Ray ... | 17 1 | Second. |
| | 67 | Manoranjan Ray ... | 19-8 | First. |
| | 68 | Gobindachandra Ray ... | 17 | Second |
| | 71 | Golokbihari Sen ... | 16-3 | Second |
| | 72 | Kshitischandra Sen ... | 16-7 | Second. |
| | 73 | Radhagobinda Sarkar (M m) ... | 17-11 | First |
| | | **Palasdanga H. E. School.** | | |
| | 74 | Aswinikumar Mukhopadhyay ... | 16-6 | First. |
| | 75 | Arjunchandra Mandal (M m) ... | 18-9 | First |
| | 77 | Haripada Chakrabarti | 17-5 | Second |
| | 78 | Krishnachandra Sarkar | 20 10 | Second. |
| | 79 | Nityananda Chattopadhyay (M m) ... | 17-9 | First |
| | 80 | Nitaichandra De (m) ... | 17-4 | First |
| | 81 | Prabodhkumar Ghoshal | 16 10 | Second |
| | 82 | Prabhaschandra Nandi (M) ... | 20 | First |
| | 83 | Radhakaranjan Bandyopadhyay ... | 17-7 | Second |
| | 84 | Rakhahari Datta ... | 18-6 | Second |
| | 85 | Saktipada Bhattacharyya ... | 18-7 | Second. |
| | 86 | Susilkumar Sarkar ... | 17 4 | First |
| | 87 | Sibaprasad Bandyopadhyay ... | 17-7 | Second |
| | 88 | Trilochan Sinha (M) ... | 19 3 | First. |
| | 89 | Manindranath Ghosh ... | 17 3 | First |
| | 90 | Santoshkumar Mukhopadhyay ... | 19-10 | Second |
| | 92 | Debendranath Samanta | 20 1 | Third |
| | 93 | Mihirmohan Sarkar ... | 18 10 | Second. |
| | | **Rajagram A. S. School.** | | |
| | 94 | Phakirdas Datta ... | 20 7 | Second |
| | 95 | Kripamay Raha ... | 18-11 | Third |
| | 96 | Janakiballabh Mukhopadhyay ... | 16-3 | Second |
| | 97 | Abanimohan Goswami | 16-5 | Second |
| | 98 | Subaschandra Raha ... | 18-1 | Second |
| | *99 | Chunilal Purohit (L m l) | 17-3 | First |
| | 100 | Bhagabatidas Raha ... | 21 | Second |
| | | **Sonamukhi Jubilee H. E School.** | | |
| | *101 | Kshitischandra Ray (M L m l) ... | 16 9 | First |
| | 102 | Bimalkrishna Bandyopadhyay (M m) ... | 19 | First |
| | 103 | Lalitmohan Mukhopadhyay ... | 17-2 | First |
| | 104 | Ramakrishna Bandyopadhyay ... | 18-8 | Third |
| | 105 | Sanatkumar Bandyopadhyay ... | 18 | Second |
| | | **Bishenpur H. E. School.** | | |
| | 106 | Binayendranath Aikat (M m) ... | 16-10 | First |
| | 107 | Abanikanta Basu ... | 18-4 | First |
| | 108 | Mahadebchandra Bajari (L m) ... | 19-9 | First. |
| | 109 | Ganapati Bhattacharyya (L) ... | 17-8 | First. |

| Roll. | No. | Name. | Age. | Division in which the candidate has passed. |
|---|---|---|---|---|
| | | **Bishenpur H. E. School.** | | |
| Bank. | *110 | Bankimchandra Biswas (M L m l) ... | 16-10 | First |
| | 111 | Tridibnath Biswas (M) | 17-2 | First |
| | 112 | Gopeswar Datta (m) ... | 18 5 | First |
| | 113 | Bagalapada Ghosh ... | 16-1 | First |
| | 114 | Krishnachandra Mandal | 16-8 | First |
| | 115 | Prabodhchandra Mandal (M m l) ... | 17-7 | First. |
| | 116 | Sasadhar Misra (L l) ... | 18 11 | First. |
| | 117 | Krishnakinkar Pahit (m) | 17-3 | First |
| | 118 | Kumarkanti Ghosh (M m) ... | 16 2 | First |
| | 119 | Santinath Bhattacharya (m) ... | 19 | First |
| | 120 | Atulkrishna Ghosh (m) | 18-7 | First. |
| | | **Badanganj H. E. School.** | | |
| | 122 | Debendranath Mandal (m) ... | 18-3 | First |
| | 123 | Kasiswar Mukhopadhyay ... | 17-2 | First. |
| | 124 | Amarnath Patra ... | 19-2 | Second |
| | 125 | Radhacharan Ray (M m) | 17 9 | First |
| | 126 | Ramkrishna Ray (m) ... | 17-1 | First |
| | 127 | Surendranath Chaudhuri | 18 | Second |
| | | **Bankura Wesleyan Collegiate School.** | | |
| | 129 | Based Khan ... | 16 11 | Second |
| | 130 | Muralidhar Bandyopadhyay (m) ... | 19-7 | First |
| | 131 | Ramkrishna Mallik (M L m l) ... | 18-1 | First |
| | 132 | Sasibhushan Sinha ... | 19 1 | First. |
| | 133 | Chittaranjan Bandyopadhyay (m) ... | 18-8 | First |
| | 134 | Adwaitanath Kumar ... | 19-8 | First. |
| | 135 | Jnanranjan Mukhopadhyay ... | 16-7 | First |
| | 136 | Taraprasanna Bandyopadhyay ... | 20-3 | First |
| | 137 | Khagendranath Mukhopadhyay (m) ... | 17-10 | First |
| | 138 | Manikchandra Mukhopadhyay ... | 16 10 | First |
| | 139 | Ranajit Sinha (m) ... | 19-3 | First. |
| | 140 | Mahadeb Ray (M L l) | 17-6 | First. |
| | 141 | Radhakrishna Pal ... | 17-7 | First. |
| | 142 | Kristacharan Pande (m) | 19-6 | First |
| | 143 | Ramkrishna Mukhopadhyay (m) ... | 18-9 | First. |
| | 144 | Nibaranchandra Mitra (m) ... | 18 1 | First. |
| | 145 | Amarnath Gangopadhyay ... | 17 1 | First. |
| | 146 | Khagendranath De ... | 18-1 | First |
| | 147 | Jasodanandan Pain ... | 18-3 | Third. |
| | 148 | Prabhaschandra Dhua (M) ... | 17-1 | First. |
| | 149 | Kalipada Bandyopadhyay (M) ... | 16 8 | First |
| | 150 | Ramgobinda Chakrabarti ... | 22-9 | First |
| | 151 | Mrityunjay Bandyopadhyay (m) ... | 16-9 | First |
| | 152 | Niradkumar Biswas ... | 18-7 | Third. |
| | 153 | Jahnabicharan Mukhopadhyay ... | 18-4 | Second |
| | 154 | Kalikrishna Mukhopadhyay ... | 16-11 | First. |

| Roll. | No. | Name. | Age. | Division in which the candidate has passed. |
|---|---|---|---|---|
| | | **Bankura Wesleyan Collegiate School.** | | |
| Bank. | 155 | Debendranarayan Bandyopadhyay ... | 16-10 | First |
| | 156 | Madanmohan Sinha ... | 16-11 | Second |
| | 157 | Kamalaprasanna Bandopadhyay ... | 16-2 | First |
| | 158 | Ramsankar Das ... | 20-1 | Second |
| | | **Tituri Kripamoyee H. E. School.** | | |
| | 159 | Radhikaprasad Sahu ... | 19 1 | Second |
| | 160 | Sasadhar Bandyopapadhyay (M m) | 22-10 | First |
| | 161 | Kamalaprasad Bandyopadhyay ... | 20-4 | Second |
| | 162 | Haripada Chaudhuri ... | 18-10 | Third |
| | 163 | Debendranath Sen (m) | 18 6 | First |
| | 164 | Nrisinhagopal Chattoraj | 17-10 | Second |
| | 165 | Jogendranath Nayak | 19-9 | Second |
| | 166 | Sasadhar Ray .. | 20 | Third. |
| | 169 | Amarendranath Niyogi | 16-8 | Second |
| | 171 | Basantanarayan Sinha | 18-2 | Second |
| | 172 | Jyotischandra Biswas (M m l) ... | 17 9 | First |
| | 176 | Bholanath Pattanayak | 17-6 | First |
| | 177 | Rampada Hajra ... | 17-7 | Second |
| | 178 | Nandakisor Kabiraj ... | 22-2 | Third |
| | 179 | Bhabanipada Chaudhuri | 20 | Second |
| | 180 | Bhabakesab Chaudhuri | 22 2 | Third. |
| | 182 | Sachchidananda Goswami ... | 20-8 | Third |
| | 186 | Bibhutibhushan Mandal | 21 5 | Second |
| | 187 | Karunamay Sarkar ... | 17 | Third |
| | 190 | Nityagopal Bandyopadhyay ... | 17 10 | Second |
| | 191 | Prakritiswarlal Sinha Deo ... | 19-1 | Second |
| | 192 | Radhagobinda Mukhopadhyay | 22-2 | Second |
| | | **Indas H. E. School.** | | |
| | 193 | Gauricharan Datta .. | 16 10 | Second |
| | 194 | Haribhushan Pal .. | 17-7 | First |
| | 195 | Karunamay Das ... | 20-1 | Second |
| | 196 | Bankimchandra Sen ... | 18-10 | First |
| | 197 | Batakrishna Nandi ... | 16-3 | First. |
| | 198 | Bagalananda Kaiti ... | 20 6 | First |
| | 199 | Nrisinhamurari Sarkar | 18-5 | Second |
| | 200 | Rabindranath Mukhopadhyay ... | 20-8 | Second |
| | 201 | Anandakumar Basu ... | 19 11 | Second |
| | | **Rai C. M. Tayyeb Institution.** | | |
| | 202 | Tarapada Mukhopadhyay ... | 16-10 | First. |
| | 203 | Bhudebchandra Nandi | 17-5 | Second |
| | 204 | Daud Ahmmad ... | 16-8 | First |
| | 205 | Syed Abdul Gani ... | 17-1 | First. |
| | 209 | Khodadad Ali Hazari | 20-4 | Second |
| | | **Bishenpur H. E. School.** | | |
| | 210 | Jatindranath Misra ... | 21-2 | First |
| | | **Bankura Hindu H. E. School.** | | |
| | 214 | Gajanan Mandal ... | 18-11 | Second. |
| | 216 | Surendranath Sarkar ... | 17 | Third |
| | 217 | Jagadischandra Ray ... | 20-8 | First |
| | 219 | Dharmadas Mukhopadhyay (m) ... | 17-1 | First. |
| | | **Bankura Hindu H. E. School.** | | |
| Bank. | 220 | Bhabeschandra Goswami ... | 21 7 | Second |
| | 221 | Gobardhan De ... | 21-1 | Second. |
| | 222 | Anukulchandra Mukhopadhyay ... | 18-10 | Second |
| | 223 | Pasupati Mandal ... | 19 8 | Second |
| | 225 | Badanchandra Bhui ... | 16-8 | Second. |
| | 227 | Syamacharan Sinha ... | 18-6 | First. |
| | 228 | Rabilochan Chattopadhyay. | 19-1 | Second |
| | 229 | Dhirendranath Mukhopadhyay ... | 18 | First |
| | 230 | Haripada Das (m) ... | 20 5 | First. |
| | 231 | Sambhunath Chaudhuri (M m) ... | 18-11 | First |
| | 232 | Girijasankar Ray (M l m l) ... | 19 | First |
| | *233 | Mahedeb Patra (M m) | 21-1 | First. |
| | *234 | Ganichandra Sural (M m) ... | 18-2 | First. |
| | 235 | Bholanath Mukhopadhyay ... | 18 1 | First |
| | 236 | Bankimchandra Mukhopadhyay (m) ... | 18-6 | First |
| | 237 | Bhudharchandra Mandal (m) ... | 16 11 | First |
| | 238 | Abalakanta Sen ... | 17-2 | Second |
| | 240 | Saratchandra Bhattacharyya ... | 18-5 | Second |
| | 241 | Karaliprasad Chattopadhyay ... | 18-8 | First |
| | 242 | Ramapada Das ... | 21-5 | Second. |
| | 243 | Kumarendranath Ray | 16 1 | Second |
| | 244 | Santamay Datta ... | 18-2 | Second |
| | 245 | Prabhaschandra Khan | 17-11 | First |
| | 246 | Kalipada Chattopadhyay ... | 19 | Second |
| | 247 | Amlprakas Ghosh ... | 17 2 | Second |
| | 248 | Manoranjan Bandyopadhyay (m) ... | 19-2 | First |
| | 249 | Sudhansusekhar Pahit | 19-5 | Second |
| | 250 | Ramdulare Dikshit .. | 21-1 | First |
| | | **Mallara H. E. School.** | | |
| | *251 | Kalipada Sen (M L m l) | 17 | First |
| | 252 | Satischandra Mukhopadhyay (M) ... | 20 | First. |
| | 253 | Dibakar Atrap ... | 18 | First |
| | 254 | Rajanikanta Chakrabarti ... | 19 | First |
| | 255 | Aparaprasad Mukhopadhyay ... | 17 | First |
| | 256 | Gangadhar Sen ... | 17-5 | First |
| | 257 | Dwijendranath Bandyopadhyay (m) ... | 18 | First |
| | 258 | Balaram Sengupta (m) | 16-9 | First |
| | 259 | Asutosh Goswami (m) | 18 | First |
| | 260 | Balaram Dasgupta (m) | 18 | First |
| | 261 | Gaurisankar Hajra (m) | 20 | First |
| | 262 | Asutosh Karak (M m) | 17-4 | First |
| | 264 | Manindrachandra Ray | 21 | Third |
| | 265 | Bholanath Chattopadhyay ... | 16 9 | Second |
| | 266 | Manmathanath Chakrabarti ... | 21 | Third |
| | | **Tangail B. B. H. E. School.** | | |
| | 268 | Purnananda Basu (m) | 16-2 | First |
| | | **Private Student.** | | |
| Bank. P. | 1 | Kalipada Modak ... | 19-7 | First. |

| Roll. | No. | Name. | Age. | Division in which the candidate has passed. |
|---|---|---|---|---|
| | | **Sasanda H. E. School.** | | |
| Bar. | 1 | Pankunchandra Dasmunsi ... | 18-1 | First |
| | 3 | Nagendranath Sengupta (M) ... | 16-2 | First |
| | 4 | Niranjan Ghoshal ... | 20-4 | First |
| | 5 | Surendranath Datta .. | 19-6 | Second |
| | 6 | Jitendrakumar Pal ... | 20 6 | Second |
| | 7 | Kshitischandra Sengupta ... | 16 | First |
| | 8 | Nisikanta Ray (Mm) ... | 16-1 | First |
| | 9 | Priyanath Ray ... | 17 1 | First |
| | 10 | Sudhirchandra Sengupta, III (m) ... | 16 | First |
| | 11 | Jogeschandra Basu ... | 20 9 | Second |
| | 12 | Surendranath Chanda .. | 18-2 | Second. |
| | 13 | Sudhirchandra Sen gupta, II (m) ... | 16 | First |
| | 15 | Sudhirkumar Sengupta, I .. | 17-1 | Third |
| | 16 | Debendranath Brahma | 18 8 | Second |
| | 17 | Nripendranath Sen gupta ... | 16-1 | First |
| | 18 | Habib Ullah Khan . | 21 1 | Second |
| | | **Siddhakati J. P. Institution.** | | |
| | 21 | Mahendralal Basu (Mm) | 18-1 | First |
| | 22 | Ratneswar Bhattacharyya (m) ... | 18 2 | First |
| | 23 | Harendralal Chakrabarti ... | 19-2 | First |
| | 24 | Jatindranath Chakrabarti ... | 18-8 | First |
| | 25 | Monoranjan Chakrabarti ... | 16-4 | First |
| | 27 | Birendranath Chattopadhyay (Mm) .. | 17 1 | First |
| | 28 | Kunjabihari Chattopadhyay ... | 18 | First |
| | 29 | Nakuleswar Das (m) ... | 18-4 | First |
| | 30 | Manmathanath Dattachaudhuri ... | 18-11 | Third. |
| | 32 | Atulchandra Gupta ... | 18-10 | Third |
| | 34 | Agnikumar Malo ... | 19-5 | Second |
| | 35 | Adityakumar Mukhopadhyay ... | 17-5 | Third |
| | 36 | Anantakumar Mukhopadhyay (M) ... | 16 8 | First |
| | 37 | Hemchandra Mukhopadhyay ... | 17-1 | Second |
| | 38 | Dineschandra Pal ... | 19-7 | Second |
| | 39 | Harendrakumar Pal ... | 19 | First |
| | 40 | Dhirendranath Ray ... | 20-1 | Second. |
| | 41 | Jatindramohan Ray ... | 18 6 | First |
| | 44 | Kalipada Gangopadhyay ... | 18 5 | First |
| | 45 | Sibadas Bandyopadhyay .. | 17-2 | Second |
| | 48 | Satischandra Basu ... | 19 1 | Second |
| | 49 | Satyacharan Bhattacharyya | 19 4 | First |
| | 50 | Birendranath Chakrabarti . | 18-1 | Second |
| | 51 | Mukundalal Chattopadhyay .. | 19-5 | Third |
| | 52 | Sureslal Chattopadhyay | 19-1 | First |
| | 53 | Upendranath Dasgupta | 20-4 | First |
| | 54 | Jogeschandra Dhar ... | 17 2 | First |
| | 55 | Bhupendranath Dattagupta ... | 17-1 | Second |
| | 57 | Upendramohan Guha... | 16-10 | First |
| | 58 | Satischandra Mukhopadhyay ... | 19-1 | Second |
| | 62 | Harendranath Bhattacharyya ... | 19-8 | First. |
| | 68 | Karamali Sardar ... | 18 3 | First. |

| Roll. | No. | Name | Age. | Division in which the candidate has passed |
|---|---|---|---|---|
| | | **Bazukati Bindubasini H. E. School.** | | |
| Bar. | 70 | Sumatibhushan Gupta (M) ... | 17 | First |
| | 71 | Hemchandra Bandyopadhyay ... | 24-1 | Second |
| | 72 | Kesabchandra Dasgupta ... | 17-11 | Second |
| | | **Bhola Govt. High School.** | | |
| | 74 | Amritalal Dasgupta (Mm) ... | 19-1 | First |
| | *75 | Rajendrakumar Chakrabarti (MLml) ... | 16 2 | First |
| | 76 | Binaykumar Chakrabarti (Mm) ... | 17-1 | First |
| | *77 | Chittaranjan Basu (Lm) | 16-8 | First. |
| | 78 | Nandalal Saha ... | 16-1 | First |
| | 79 | Rajendramohan Sil ... | 19 | Second |
| | 80 | Phanibhushan Nag ... | 16-11 | First |
| | 81 | Sailendrakumar Guha | 16-1 | Second |
| | 82 | Nirmalkumar Gupta ... | 18-1 | Second |
| | 83 | Baradakanta Chaudhuri ... | 17-6 | First |
| | 84 | Jitendranath Biswas ... | 16 1 | First |
| | 85 | Nalinmohan Bandyopadhyay ... | 21 | First |
| | 86 | Abubaker Siddik ... | 19 7 | First |
| | 88 | Abdul Jalil ... | 19-1 | Second. |
| | 89 | Mohammed Eunus (Mm) ... | 16-4 | First. |
| | 90 | Abual Hossain (m) ... | 18 1 | First. |
| | | **Saptagram Sammilani Institution.** | | |
| | 91 | Bazle Ali Khan (M) .. | 18-1 | First |
| | 93 | Abdul Latif ... | 26 1 | Second. |
| | 95 | Anantakumar Das ... | 19 3 | First |
| | 96 | Haribhushan Das (m) | 19 | First. |
| | 97 | Jajneswar Haoladar ... | 18 4 | Second |
| | 98 | Binodbihari Haldar ... | 19-1 | First |
| | 99 | Brajendranath Haldar | 20-1 | First |
| | 101 | Baradakanta Sen ... | 20-7 | First |
| | 102 | Bhupeschandra Deray | 18-7 | First |
| | 103 | Birendranarayan Mitra | 17 1 | First |
| | 104 | Bhabaranjan Mukhopadhyay ... | 19 | Second. |
| | 106 | Nagendranath Sil ... | 18-8 | Second |
| | 107 | Said Uddin ... | 21-5 | Second. |
| | | **Wazirpur W. B. Union Institution.** | | |
| | 108 | Matilal Das ... | 19-3 | Second |
| | 109 | Jatindranath Dasgupta | 20-10 | First |
| | 110 | Sudhansukumar Gangopadhyay (Mm) ... | 16-2 | First. |
| | 111 | Gopalchandra Guha (Mm) ... | 16-9 | First. |
| | 112 | Chandicharan Haldar | 19-7 | Second. |
| | 113 | Rohinikumar Karmakar (Mm) ... | 17-8 | First |
| | 114 | Anantakumar Nath ... | 20-6 | Third |
| | 115 | Tarapada Raychaudhuri (Mm) ... | 18-1 | First |
| | 116 | Bipinchandra Rajakdas | 22-2 | Second. |
| | 117 | Binaybhushan Biswas | 16-7 | First |
| | 119 | Narendramohan Basu... | 20-6 | Second. |
| | 120 | Lalitkumar Deori ... | 22-2 | Third |
| | 123 | Jajneswar Mitra ... | 20-7 | Second |
| | 124 | Gajendranath Ray ... | 19-4 | Third |
| | | **Barisal Town School.** | | |
| | 127 | Md Kadam Ali Khan... | 18-4 | Second |
| | 128 | Kunjabihari Karmakar | 20 8 | First. |
| | 129 | Manoranjan Bhadra ... | 18-1 | First. |
| | 130 | Rajendranath Gangopadhyay (M) ... | 22-1 | First. |

| Roll. | No. | Name. | Age. | Division in which the candidate has passed |
|---|---|---|---|---|
| | | **Garisal Town School.** | | |
| Bar. | 132 | Birajmohan Raychaudhuri ... | 20-1 | First |
| | 133 | Surendranath Sengupta | 18 2 | Second. |
| | 136 | Sukumar Bhattacharyya (m) ... ... | 20 | First. |
| | 137 | Sailendranath Guhathakurta ... ... | 18 1 | Second |
| | 138 | Umeschandra Bandyopadhyay (m) ... | 17-1 | First. |
| | 141 | Amulyanarayan Ghatak | 16-4 | First |
| | 142 | Jitendranath Das ... | 17-5 | Third |
| | 143 | Nalinikumar Ghoshdastidar .. | 21-7 | First |
| | 144 | Chintaharan Sinha .. | 25-1 | Second |
| | 145 | Jatindranath Basu ... | 17-2 | Second |
| | 147 | Anantakumar Guha ... | 16-10 | Second |
| | 148 | Hemangamohan Saha .. | 18-5 | Second |
| | | **Rahamatpur H. E. School.** | | |
| | 150 | Nirmalchandra Bandyopadhyay ... | 18 2 | Second |
| | 151 | Madhusudan Bhattacharyya (Mm) ... | 18 | First. |
| | 152 | Surendranath Basu ... | 22 1 | Second |
| | 153 | Baranali Das .. | 21-2 | Third |
| | 154 | Taranikanta Gangopadhyay (Mm) ... | 19 | First |
| | 155 | Jyotischandra Gangopadhyay ... | 1 -5 | First |
| | 157 | Debendrabijay Mukhopadhyay .. | 16-9 | First |
| | 158 | Bijayratna Bandyopadhyay ... | 18-7 | Second |
| | 159 | Sureschandra Chakrabarti .. | 16-11 | First |
| | 160 | Hrishikes Chattopadhyay .. ... | 19-11 | First |
| | 161 | Anantakumar Das .. | 20 | Second |
| | 162 | Kartikchandra Gangopadhyay ... | 17-7 | Second |
| | 163 | Usharanjan Gangopadhyay ... | 21 | Second |
| | 164 | Akshaykumar Ghatak | 21-2 | Second |
| | 165 | Nakuleswar Ghoshal . | 19-3 | Second |
| | 166 | Rajendranath Guha ... | 20-7 | Second |
| | 168 | Phambhushan Mukhopadhyay (M) .. | 16 10 | First |
| | 169 | Mukundachandra Mukhopadhyay ... | 18 11 | First |
| | 171 | Susilkumar Sengupta .. | 17 | Second |
| | 172 | Gopalchandra Chakrabarti ... | 21-3 | Second |
| | | **Banaripara Union Institution.** | | |
| | 173 | Sudhanyakumar Bandyopadhyay ... | 16 | Second. |
| | 174 | Rohinikumar Banik ... | 19 1 | First |
| | 175 | Sudhiranjan Basu (Mm) ... | 16 3 | First. |
| | 176 | Rasranjan Biswas (Mm) | 17 10 | First |
| | 182 | Kshitendranarayan Ghosh (Mm) ... | 17-2 | First |
| | 183 | Amalendramohan Ghoshray (m) ... | 16-1 | First |
| | 184 | Mohinimohan Gohathakurta ... | 20-1 | Second |
| | 185 | Nakuleswar Indu, I (Mm) ... | 16-3 | First |
| | 186 | Nakuleswar Indu, II (M) ... | 18-5 | First. |
| | 188 | Surendralal Nath .. | 16 | Third |
| | 189 | Jitendranath Ray ... | 17-1 | Second. |
| | 191 | Kedareswar Raychaudhuri ... | 16-11 | Second |
| | 192 | Jadunath Sil ... | 20-3 | First. |
| | 193 | Anantakumar Sikdar ... | 19-1 | First. |

| Roll. | No | Name. | Age | Division in which the candidate has passed. |
|---|---|---|---|---|
| | | **Banaripara Union Institution.** | | |
| Bar. | 194 | Rajendralal Sinha | 18-1 | First. |
| | 195 | Abanibhushan Das . | 17 | Second |
| | 197 | Sunilkumar Guhathakurta ... | 18 11 | Second. |
| | 199 | Sadat Ali Sarder .. | 22 8 | Second |
| | 200 | Narendrakumar Samaddar Chaudhuri ... | 17-1 | Third |
| | 201 | Asutosh Sikdar ... | 22 1 | Second |
| | 203 | Abdur Rab Mea ... | 16-5 | First |
| | 205 | Raje Ali .. | 19-9 | First. |
| | | **Pirojpur Government H. E. School.** | | |
| | 206 | Satindranath Bhattacharyya (Mm) | 20 | First |
| | 207 | Hemchandra Bhattacharyya (Mm) .. | 17 10 | First |
| | 208 | Bankimbihari Basu (m) | 18-11 | First |
| | 209 | Sailendranath De ... | 19 | First. |
| | 210 | Surendranath Das (Mm) | 18-1 | First |
| | 211 | Anilchandra Ghosh (Mm) .. | 16-1 | First |
| | 212 | Jibankumar Guha (M) | 17 6 | First |
| | 214 | Manoranjan Pal (Mm) | 19 2 | First |
| | 215 | Nirmalkumar Ray (Mm) | 16 1 | First |
| | 216 | Biswesswar Ray ... | 18 8 | First |
| | 217 | Hemchandra Sengupta | 16 11 | First |
| | 218 | Brajendrakumar Basu (M) . | 18-2 | First |
| | 219 | Haranchandra Datta (m) . | 17 2 | First |
| | 220 | Upendranath Ghosh (Mm) . | 17-1 | First |
| | 221 | Saileschandra Mitra | 18 1 | First |
| | 222 | Bipulkumar Saha (m) | 17-4 | First |
| | 223 | Sudhirchandra Sengupta (m) .. | 18 | First |
| | 224 | Birendranath Datta .. | 18 1 | First |
| | 225 | Surendranath Biswas | 18 2 | First |
| | 227 | Asutosh Brahma | 18 11 | Second |
| | 228 | Susilkumar Chakrabarti ... | 16-1 | First |
| | 230 | Siddheswar Chakrabarti | 18 6 | Second |
| | 231 | Sasadhar De .. | 16-7 | First |
| | 232 | Subodhchandra Gangopadhyay .. | 17-1 | First |
| | 233 | Abinaschandra Haldar | 17-1 | Second |
| | 234 | Agnikumar Samaddar | 17 1 | Second |
| | 236 | Moslehuddin Ahmed ... | 17-2 | Second |
| | 237 | Muzaffar Ali Howlader | 19 4 | First |
| | 239 | Mozaher Hossain Nur Ahmed ... | 18-1 | Second |
| | | **Galia H. E. School.** | | |
| | 240 | Hrishikes Bhattacharyya (M) ... | 17 | First |
| | 241 | Prabhatchandra Bhattacharyya ... | 17 7 | Second |
| | 242 | Surendranath Bhattacharyya (Mm) ... | 17-2 | First |
| | 243 | Lalitmohan Biswas ... | 19 11 | Second |
| | 244 | Jitendranath Chakrabarti ... | 18 5 | Second |
| | 247 | Surendramohan Chattopadhyay .. | 18-4 | Second |
| | 250 | Anilkumar Dasgupta ... | 16 11 | First |
| | 251 | Atulchandra Dasgupta ... | 17 2 | Second |
| | 252 | Debakumar Dasgupta .. | 19 2 | Second |
| | 253 | Satischandra De ... | 20-1 | Second |
| | 254 | Narendranath Gupta .. | 17-8 | Third |
| | 255 | Sudhansukumar Gupta (Mm) ... | 16-1 | First |
| | 256 | Sasibhushan Haldar .. | 19-1 | First |
| | 257 | Dinabandhu Hajra ... | 18 8 | Second. |
| | 261 | Manimohan Sil .. | 19 8 | Second. |

| Roll | No. | Name | Age. | Division in which the candidate has passed. |
|---|---|---|---|---|
| | | **Galia H. E. School.** | | |
| Bar. | 262 | Brajendranath Sengupta (m) ... | 17-7 | First. |
| | 263 | Debendranath Sengupta .. | 17-2 | Second |
| | 264 | Indubhushan Sengupta (Mml) ... | ... | First. |
| | 265 | Janardan Sengupta (Mm) ... | 18 7 | First |
| | 270 | Bhabaniprasad Dasgupta ... | 17-2 | First. |
| | 272 | Jitendranath Dasgupta, II ... | 17-2 | Second |
| | 273 | Sailendrakumar Dasgupta ... | 16 1 | Second |
| | 274 | Sarojkumar Dasgupta .. | 16-2 | First. |
| | 276 | Subodhkumar Dasgupta ... | 17-4 | Second. |
| | 277 | Sukumar Dasgupta ... | 19-1 | Second |
| | 279 | Aswinikumar Guha ... | 18-5 | Second |
| | 280 | Amulyaratan Gupta ... | 17 4 | Second. |
| | 281 | Rajkumar Kapali ... | 19-2 | Third |
| | 282 | Chandrakanta Karmakar ... | 19-1 | First |
| | 283 | Praphullakumar Mukhopadhyay ... | 17 11 | Second |
| | 284 | Satischandra Mukhopadhyay ... | 16-1 | Second |
| | 285 | Nalinikanta Munsi .. | 19-1 | Second |
| | 286 | Hemantakumar Sengupta ... | 17-4 | First |
| | 287 | Kshirodchandra Sengupta ... | 21-3 | Second |
| | 288 | Premranjan Sengupta ... | 18 7 | Second. |
| | 289 | Sailendranath Sengupta ... | 17-2 | First |
| | 290 | Sudhirranjan Samaddar ... | 19-1 | Second |
| | 291 | Sisirkumar Dasgupta... | 16-1 | Second |
| | 295 | Mahammad Kashem Sonnamat ... | 17-8 | Second |
| | | **Patuakhali Latif Municipal Seminary.** | | |
| | 296 | Ramaniranjan Das ... | 18-9 | First |
| | 297 | Kshitischandra Mukhopadhyay (m) .. | 19-2 | First |
| | 298 | Upendranath Bandyopadhyay (M) ... | 17-8 | First. |
| | 299 | Bipinbihari Haoladar ... | 19-2 | Second |
| | 300 | Praphullakumar Dasgupta ... | 18-5 | Second |
| | 301 | Narayanchandra Nandi | 18-9 | Second |
| | 302 | Jitendranath Ghosh ... | 21 2 | First |
| | 303 | Afsaruddin Ahammad | 20-2 | Second |
| | 304 | Salal Ahamed ... | 16-2 | First |
| | | **Gabha High School.** | | |
| | 305 | Dhirendranath Basumajumdar ... | 17-11 | Second |
| | 308 | Rajendranath Basu, I | 19-1 | Second. |
| | 309 | Rajendranath Basu, II | 20-3 | Second. |
| | 310 | Susilkumar Basuraymirbahar (Mml) ... | 16-2 | First |
| | 312 | Rajendralal Chattopadhyay ... | 16 | Second |
| | 313 | Prahladchandra Aich ... | 18-1 | Second. |
| | | **Bauphal H. E. School.** | | |
| | 314 | Mahendralal Datta (M) | 20-1 | First. |
| | 315 | Manoranjan Saha ... | 17 1 | Second. |
| | 316 | Nagendranath Saha ... | 17-1 | Second. |
| | 317 | Abdul Hamid ... | 25 | Third. |
| | 318 | Mohammad Esahaque | 22-1 | Second |
| | 319 | Kaliprasanna Dattagupta ... | 18-1 | Second. |

| Roll. | No. | Name. | Age. | Division in which the candidate has passed. |
|---|---|---|---|---|
| | | **Bauphal H. E. School.** | | |
| Bar. | 320 | Mahammad Abdur Rahman ... | 17-2 | Third |
| | 321 | Abdul Kadir ... | 16-5 | Second |
| | 322 | Kamaluddin Ahmed ... | 18-2 | Third. |
| | 323 | Jennat Ali ... | 20-1 | First |
| | | **Idilpur H. E. School.** | | |
| | 324 | Rahamatali Dewan ... | 16-8 | First. |
| | 325 | Nibaranchandra Basu | 17-2 | Second |
| | 326 | Jagadischandra Chakrabarti (m) ... | 17-2 | First. |
| | 327 | Mohanbasi Das (m) ... | 17-3 | First. |
| | 328 | Makhanlal De ... | 18-2 | Second |
| | 329 | Nepalchandra Karmakar ... | 16-3 | Second |
| | 330 | Narendranath Raychaudhuri (Mm) ... | 16-2 | First. |
| | 331 | Manindramohan Raychaudhuri ... | 17-3 | Second |
| | | **Uttarsahabajpur George Institution.** | | |
| | 334 | Debendranath Das (Mml) ... | 16-2 | First |
| | 336 | Makhanlal De (m) .. | 16-3 | First. |
| | 337 | Bakuleswa Ghosh (m) | 20-5 | First |
| | 338 | Kunjalal Khan ... | 16-2 | First |
| | 339 | Jajneswar Nath ... | 19 | Second |
| | 340 | Nibaranchandra Nath .. | 19-1 | Second |
| | 341 | Hemchandra Ray ... | 21-2 | Second |
| | 342 | Jagadischandra Sarkar (Mml) ... | 18-2 | First. |
| | 343 | Surendramohan Datta | 17-8 | Second |
| | 345 | Manindramohan Sinha | 17-2 | Second. |
| | 346 | Jadunath Majumdar ... | 18-4 | Third |
| | | **Chandahi I. C. H. E. School.** | | |
| | 347 | Sudhirkumar Basu (Mm) ... | 19-4 | First |
| | 348 | Jogeschandra Sil ... | 17-10 | First |
| | 350 | Sridharprasanna Sen (m) ... | 16-2 | First |
| | 351 | Biharilal Das ... | 18-10 | Second |
| | 353 | Surendralal Raychaudhuri ... | 20-1 | Second |
| | 354 | Nagendranath Das ... | 19-1 | Second |
| | 360 | Kartikchandra Das ... | 18-1 | Third |
| | | **Jagannathpur Chandiprasad H. E. School.** | | |
| | 361 | Mafizuddin Ahamed ... | 21 | First. |
| | 362 | Sudhirchandra Sengupta (Mm) ... | 17-4 | First |
| | 363 | Harendrakumar Sil ... | 19-5 | First. |
| | 364 | Susilkumar Ray (m) ... | 17-2 | First |
| | 366 | Hiranyakumar Ray ... | 21-2 | First. |
| | 367 | Suhridranjan Bandyopadhyay ... | 20-1 | Second |
| | 368 | Praphullakumar Bhattacharyya ... | 19 | Second |
| | 370 | Jaminiranjan Bal ... | 18-5 | Second. |
| | 373 | Niranjan Mukhopadhyay ... | 18 2 | Second. |
| | 374 | Debendranath Raychaudhuri ... | 17-3 | First. |
| | | **Barthi Tara Institution.** | | |
| | 376 | Wazed Ali Mirh ... | 18-2 | Second. |
| | 378 | Manoranjan Bhattacharyya ... | 19-4 | Second. |
| | 379 | Basinath Basu ... | 17-3 | Third. |
| | 380 | Susilkumar Chakrabarti | 16-2 | First. |
| | 381 | Hirendranath Gangopadhyay .. | 18-1 | First. |
| | 382 | Juranchandra Sanyal | 16-2 | Third. |

| Roll. | No. | Name | Age. | Division in which the candidate has passed. |
|---|---|---|---|---|
| | | **Barthi Tara Institution.** | | |
| Bar. | 383 | Lalitmohan Sil ... | 16-2 | Second |
| | 385 | Amarnath Bhattacharyya . | 16-2 | Second |
| | 386 | Srischandra Chakrabarti | 19-2 | First |
| | 387 | Bisweswar Chakrabarti | 16 8 | First |
| | 388 | Anantakumar Pu hilal | 17-7 | Second |
| | | **Barisal Model H. E. School.** | | |
| | 391 | Upendranath Chattopadhyay (m) ... | 18 5 | First |
| | 392 | Jagannath Basu ... | 17 | Second |
| | 393 | Jaminikanta Guha ... | 17-2 | Second |
| | 394 | Jitendranath Dasgupta | 19 2 | Second |
| | 395 | Bijaykanta Sengupta | 20-6 | First |
| | 396 | Amulyakumar Dasgupta (m) . . | 17-7 | First |
| | 397 | Anukulchandra Dasgupta (m) ... | 17-8 | First |
| | 398 | Mukundalal Basu ... | 18 8 | Second |
| | 399 | Rajendralal Ghosh ... | 17-2 | Third |
| | 400 | Jitendranath Ghosh ... | 17-2 | Second |
| | 403 | Kshitischandra Basu (MV) ... | 16-2 | First. |
| | 404 | Syamacharan Chattopadhyay .. | 16 8 | First |
| | 406 | Indubhushan Sengupta | 16 5 | Second |
| | 407 | Makhanlal Gangopadhyay .. | 18 1 | Second |
| | 410 | Prithwischandra Pal . | 16-2 | Second |
| | 411 | Abdus Satter Khan ... | 16 8 | Third |
| | | **Gabha High School.** | | |
| | 417 | Girindranath Ghoshdastidar (Mm) ... | 17-1 | Second. |
| | 424 | Binodbihari Ray . . | 18 3 | Second. |
| | 425 | Harakanta Ray . . | 18-2 | Second |
| | 426 | Narendranath Ray (Mm) ... | 19-7 | First |
| | 434 | Saradakanta De .. | 17-8 | First |
| | 435 | Charuchandra Ghoshdastidar ... | 18 1 | Second |
| | 438 | Nakuleswar Gupta .. | 20 | First |
| | 439 | Nalinranjan Ray ... | 16 1 | Third |
| | 440 | Srischandra Raychaudhuri ... | 17-4 | First. |
| | 443 | Syed Abdul Wohab Khandaker ... | 18-1 | Second |
| | 445 | Moyenuddin Ahammad | 19-1 | Third |
| | | **Jagannathpur Chandiprasad H. E. School.** | | |
| | 446 | Anantakumar Chakrabarti ... | 21-11 | First |
| | 447 | Narayanchandra Ray .. | 19-9 | First |
| | | **Sree Chaitanya Govindamohan Vidyalaya H. E. School.** | | |
| | *448 | Nayananjan Dasgupta (ML Vm) .. | 16 8 | First |
| | 449 | Satyabhushan Dasgupta | 16-10 | First |
| | 450 | Abanikanta Kar ... | 16-2 | First. |
| | 451 | Sasadhar Guha ... | 18-3 | First. |
| | 452 | Sudhansukumar Chattopadhyay ... | 17-6 | Second |
| | 453 | Rabindrakumar Basu ... | 16-8 | First |
| | 455 | Upendranath Das (M) | 17-1 | First |
| | 456 | Niranjan Chakrabarti | 19-3 | Second. |
| | 458 | Sukumar Guha ... | 18-3 | First |
| | 459 | Surhidchandra Guha ... | 16-1 | Second. |
| | 460 | Rameschandra Chakrabarti ... | 17-4 | First |
| | 461 | Sudhansubhushan Chaudhuri (Mml) ... | 16 3 | First. |
| | 462 | Sukhamay Gupta (M) | 21-3 | First |
| | 464 | Chittaranjan Gupta .. | 18-6 | Second |
| | | **Sree Chaitanya Govindamohan Vidyalaya H. E. School.** | | |
| Bar. | 466 | Nripendranath Ray ... | 16-11 | First |
| | 468 | Ratneswar Basu ... | 16-10 | First |
| | 470 | Subodhchandra Ghosh | 16 9 | Second |
| | 471 | Srikanta Guha (M) ... | 20-8 | First |
| | 472 | Haridas Chakrabarti (M) | 16-11 | First. |
| | 473 | Jnanprasanna Dasgupta | 17-2 | First. |
| | 475 | Dhirendranath Chattopadhyay (IH) ... | 16-1 | First |
| | 476 | Bhupendranath Mukhopadhyay ... | 16 3 | First |
| | 480 | Sudhirchandra Basuraychaudhuri ... | 18-2 | Second. |
| | 481 | Jogendranath Mukhopadhyay ... | 16 1 | First |
| | 486 | Nareschandra Ray ... | 17 5 | Second |
| | | **Basanda H. E. School.** | | |
| | 488 | Sureschandra De (Mm) .. | 16 | First. |
| | | **Barisal Zila School.** | | |
| | 489 | Syed Abdul Wali ... | 18 6 | First |
| | | **Kirtipasa P. K. Institution.** | | |
| | 494 | Birajmohan Chattopadhyay . | 18-6 | First |
| | 498 | Harendranath Gupta (Mm) . | 18-7 | First |
| | 500 | Jitendranath Mukhopadhyay (ml) ... | 17-5 | First |
| | 502 | Debendranath Ray ... | 18-7 | First |
| | 503 | Satischandra Sil ... | 18-2 | Second. |
| | 504 | Satischandra Samaddar | 19 9 | First |
| | 505 | Syed Abdus Sotter ... | 17-3 | Second. |
| | 508 | Praphullakumar Dasgupta . | 18 11 | Third |
| | 509 | Jadabchandra Das ... | 17-1 | Second |
| | 510 | Atulchandra Sengupta | 16-8 | First |
| | 511 | Saratchandra Saha | 17-8 | Third |
| | 514 | Nooruddin Khan . | 21-3 | Third. |
| | | **Sholak Victoria H. E. School.** | | |
| | 517 | Anantakumar Das (Mm) ... | 19 1 | First. |
| | 519 | Sudhanyakumar Basu | 18-1 | First. |
| | 520 | Jadunath Das ... | 18-4 | First. |
| | 522 | Umeschandra Gangopadhyay ... | 17-7 | First. |
| | *523 | Prabhatchandra Mukhopadhyay (Vm) ... | 16 9 | First |
| | 524 | Juranchandra Mukhopadhyay ... | 19 1 | Second |
| | 526 | Anantakumar Bandyopadhyay ... | 18 8 | Second |
| | 529 | Debnath Bhattacharyya | 20-9 | Second. |
| | 531 | Hiralal Daschakladar .. | 17-1 | Second. |
| | 533 | Hemendranath Ghosh | 18-2 | Second |
| | 534 | Krishnapada Mukhopadhyay ... | 17-1 | First |
| | 536 | Abdul Mosud Sarniabat | 18-11 | Second. |
| | | **Sofra P. C. H. E. School.** | | |
| | 540 | Saradacharan Sarkhel | 16-3 | First. |
| | 541 | Lalitkumar Karmakar (m) ... | 19-1 | First. |
| | 542 | Brajendrakumar De (Mm) ... | 20 | First |
| | 543 | Jibanchandra Chattopadhyay ... | 17-5 | First. |
| | 546 | Haranchandra Sil .. | 17-3 | First |
| | 547 | Lalitmohan Sen ... | 25 1 | Second. |
| | 548 | Rajendranath Putatunda ... | 23 8 | Second |

| Roll. | No | Name | Age. | Division in which the candidate has passed. |
|---|---|---|---|---|
| | | **Sofra H. E. school.** | | |
| Bar. | 550 | Jatindramohan Gangopadhyay ... | 20-10 | Second. |
| | 553 | Khagendranath Das ... | 17-11 | Second |
| | 554 | Phanilal Bandyopadhyay ... | 18-2 | Second |
| | | **Asmatali Khan Institution. Barisal.** | | |
| | 555 | Haranchandra Bhattacharyya ... | 18-1 | First |
| | 556 | Phanindramohan Basurayamrbahar ... | 16-11 | First |
| | 557 | Sureschandra Das ... | 18-9 | Second |
| | 563 | Muhammed Jan Howlader ... | 24-2 | Second |
| | 565 | Md Abdul Aziz ... | 16-5 | First |
| | 568 | Syed Bahauddin ... | 17 1 | First |
| | 571 | Ashrafuli Khan (L) ... | 19-1 | First* |
| | 572 | Zahural Haque Mazumder (m) .. | 16-3 | First |
| | 577 | Md Abdul Gafur .. | 20-1 | Second |
| | | **Barisal Zila School.** | | |
| | 579 | Nagendranath Bhattacharyya .. | 16-1 | First |
| | 580 | Stephen Biswas (m) ... | 18-2 | First |
| | 581 | Jnanchandra Chakrabarti (m) ... | 17-3 | First |
| | 582 | Harendranath Chattopadhyay (M) ... | 16 9 | First. |
| | 583 | Kalipada Chattopadhyay .. | 17 3 | First |
| | 584 | Matilal Chattopadhyay (m) .. | 19-3 | First |
| | *585 | Bijaychandra Dasgupta (MLml) ... | 17-3 | First |
| | *586 | Santoshkumar Dasgupta (Mml) .. | 16 11 | First |
| | *587 | Sudhansumohan Ghosh (MLml) .. | 17-2 | First |
| | 588 | Sukumarchandra Guha (MLml) ... | 16 10 | First |
| | 589 | Binaybhushan Gupta (M) ... | 18-1 | First |
| | 590 | Atulkrishna Karmakar | 16-5 | First |
| | 591 | Makhanlal Mukhopadhyay (MVm) ... | 16-10 | First. |
| | 592 | Nalinikanta Nandi ... | 18 7 | Second |
| | *593 | Dhirabalal Niyogi (Mm) | 16 7 | First |
| | 594 | Saurendranath Sen (Mm) ... | 16-1 | First |
| | 595 | Nalinbhushan Sengupta (Mm) ... | 16-4 | First. |
| | 596 | Praphullakumar Sengupta, I (MLm) ... | 16 | First |
| | 597 | Praphullakumar Sengupta, II ... | 17-6 | Second |
| | 598 | Arabinda Ghosh (m) ... | 19-1 | First |
| | 599 | Jatindranath Sen (m) .. | 17-9 | First |
| | 600 | Krishnadas Bandyopadhyay (Mm) ... | 16-2 | First |
| | 601 | Priyalal Bandyopadhyay (Mm) ... | 16-3 | First |
| | 602 | Jyotischandra Biswas (m) ... | 18 | First |
| | 603 | Bidhubhushan Chattopadhyay (Mm) ... | 20 | First |
| | 604 | Susilkumar Ghosh (Mm) | 16-3 | First. |
| | *605 | Sachindranath Gupta (Mm) ... | 16 2 | First |
| | 606 | Kshitischandra Majumder (m) ... | 16 1 | First |
| | 608 | Sudhirchandra Nandi (m) | 16 4 | First. |
| | 609 | Krishnadas Pal (Mm)... | 16-10 | First |
| | 610 | Sudhansukumar Sarkar (m) ... | 17-7 | First. |

| Roll. | No | Name. | Age | Division in which the candidate has passed. |
|---|---|---|---|---|
| | | **Barisal Zila School.** | | |
| Bar. | 611 | Birendranath Sen (Mm) | 16 | First |
| | 612 | Susthirchandra Sen (m) | 16-1 | First. |
| | 613 | Nalinranjan Sengupta (Mm) ... | 16 4 | First |
| | 614 | Nikunjabihari Bandyopadhyay ... | 16-2 | First. |
| | 615 | Phanindrachandra Chattopadhyay ... | 17 3 | Second |
| | 616 | Purnananda Chattopadhyay ... | 16 4 | First |
| | 617 | Subodhkumar Dasgupta ... | 17-1 | First. |
| | 618 | Nirmalchandra Gangopadhyay ... | 18 1 | First |
| | 619 | Amiyabhushan Ghosh ... | | Second |
| | 620 | Charuchandra Gupta .. | 18-1 | Second |
| | 621 | Harendralal Ray ... | 19-3 | First |
| | 623 | Amritalal Chattopadhyay ... | 16-5 | First |
| | 624 | Hiralal Chattopadhyay | 16-6 | Second |
| | 625 | Abdul Gafur (Mm) ... | 17-1 | First. |
| | 626 | Asmatali Khan (m) ... | 18-11 | First |
| | 627 | Nawab Hossain (Mm) | 18-10 | First. |
| | 628 | Sarder Monje Ali (Mml) | 16-6 | First |
| | 629 | Md. Abdus Shahib Mia (l) .. | 17-6 | First. |
| | 630 | Md. Enayet Pir (Mm) | 16 1 | First |
| | 631 | Golam Morshed .. | 17-1 | First. |
| | 632 | Mohamad Hossain Ali | 16 6 | First |
| | | **Daulat Khan H.E. School.** | | |
| | 634 | Kalimohan Sil ... | 18-1 | First |
| | 635 | Abul Faiz Nur Mohamed | 18-2 | First |
| | 636 | Matiar Raham ... | 16-2 | Second. |
| | 640 | Shahidul Haque ... | 17 7 | Second |
| | | **Barisal Model H. E. School.** | | |
| | *650 | Nakuleswar Datta (MVml) ... | 17 3 | First |
| | 651 | Nagendranath Chakrabarti (Mm) ... | 16-8 | First |
| | 652 | Rajendranath Datta (m) | 16-6 | First |
| | 654 | Haridas Mukhopadhyay (Mm) ... | 16 3 | First |
| | 656 | Bijaykumar Guha (m) | 16-11 | First |
| | 657 | Bhubaneswar Nath ... | 19 1 | First |
| | 659 | Jnanendranath Bandyopadhyay (m) ... | 16 | First |
| | 660 | Satyaranjan Mukhopadhyay (m) .. | 17 1 | First |
| | 662 | Abaniranjan Sen (m) .. | 16-3 | First |
| | 664 | Ajitkumar Guha (Mm) | 16-4 | First |
| | 665 | Mukulchandra Guha ... | 16 8 | Second |
| | 667 | Chanchalkumar Basu (Mm) .. | 16-7 | First |
| | 668 | Dwijendranath De ... | 16-4 | Second. |
| | 672 | Surendranath Som ... | 18 1 | Second. |
| | 673 | *Narendranath Datta ... | 17 6 | Second. |
| | 674 | Niharranjan Ghosh ... | 16-7 | First |
| | | **Kalaskati B. M. Academy.** | | |
| | 675 | Surendranath Chattopadhyay (Mm) ... | 16-9 | First. |
| | 676 | Niranjan Mukhopadhayay, II (Mml) | 20 4 | First. |
| | 677 | Pulinbihari Bandyopadhyay (Mml) ... | 17-2 | First. |
| | 678 | Debendranath Das (MLml) ... | 17-3 | First. |
| | 679 | Umeschandra Guha (M) | 16 8 | First. |
| | 680 | Krishnakanta Bandyopadhyay (m) ... | 18-9 | First. |
| | 681 | Phanindranath Raychaudhuri ... | 16 6 | First. |
| | 682 | Kanailal Mukhopadhyay ... | 19-11 | Second. |

| Roll. | No. | Name. | Age. | Division in which the candidate has passed |
|---|---|---|---|---|
| | | **Kalasokati B. M. Academy.** | | |
| Bar. | 684 | Nripendranath Mukhopadhyay ... | 17-7 | Second. |
| | 688 | Haranchandra Bandyopadhyay ... | 18-6 | Second |
| | 689 | Sureschandra Datta ... | 16 8 | Second |
| | 690 | Bhupatimohan Mukhopadhyay ... | 17 2 | Second |
| | 691 | Satischandra Biswas ... | 19-1 | First. |
| | 694 | Ramchandra Mukhopadhyay ... | 17-6 | Second |
| | 695 | Ajitkumar Mukhopadhyay ... | 17-11 | Second |
| | 697 | Sudhansubhushan Gangopadhyay ... | 16-2 | Second |
| | 699 | Md. Easin Khan ... | 18-8 | Second |
| | 700 | Abdul Aziz Mridha ... | 18 4 | First |
| | 701 | Abdul Hamid Houlader (Lm) ... | 17 9 | First |
| | | **Tarkibandar Victory High School.** | | |
| | 702 | Syamakanta Mitra ... | 17-6 | Third. |
| | 703 | Hemantakumar Mitra (Mm) .. | 16-6 | First |
| | 704 | Satischandra Das (Mm) | 18-2 | First |
| | 706 | Basantakumar Das (Mm) | 18-1 | First |
| | 707 | Rajendralal Bar (m) ... | 19-1 | First |
| | 708 | Binodbihari Das ... | 18 1 | First |
| | 709 | Janakinath Das ... | 16-2 | Second |
| | 712 | Hiralal Das ... | 16-8 | First |
| | 713 | Binodlal Pal . | 17-2 | Third |
| | 715 | Abanimohan Chakrabarti | 16 | Second |
| | 721 | Abu Mahamad Ismail Hoque ... | 20 9 | Second |
| | | **Chandsi I. C. H. E. School.** | | |
| | 724 | Ahammed Adeluddin ... | 17-1 | Second |
| | | **Jalabari D. N. High School.** | | |
| | 727 | Satindranath Mukhopadhyay (M) ... | 18-2 | First |
| | 729 | Bhabaranjan Das . | 17-8 | First |
| | 730 | Kumudbandhu Aich ... | 17-3 | Second |
| | 732 | Jitendranath Chakrabarty ... | 20-3 | Second |
| | 733 | Susilranjan Das ... | 16-2 | First |
| | 734 | Sudhirchandra Ghosh. . | 16-2 | First |
| | 735 | Nibaranchandra Pal ... | 17-2 | First |
| | 736 | Surendranath Samaddar ... | 17-4 | First |
| | 737 | Kshirodchandra Das (Mm) ... | 18-2 | First |
| | 740 | Bhabatosh Das ... | 17-3 | Third. |
| | | **Jhalakati Government High School.** | | |
| | 744 | Azahar Ali Khan ... | 16 | First |
| | 745 | Abdul Jabbar (m) ... | 18-2 | First. |
| | 746 | Sudhansubhushan Bhattacharyya (m) ... | 18-4 | First |
| | 747 | Sureschandra Chakrabarti (Mm) ... | 17-4 | First. |
| | 748 | Kaminikumar Datta .. | 20 2 | First. |
| | 749 | Jitendranath De (m) ... | 21-1 | First |
| | *750 | Gopalchandra Gangopadhyay (Mm) ... | 16-7 | First. |
| | 751 | Hiralal Mukhopadhyay | 20-11 | First |
| | 752 | Kanailal Mukhopadhyay (Mm) ... | 17-2 | First. |
| | 753 | Nripendralal Palchaudhuri ... | 19-3 | First |
| | 754 | Phanindralal Saha (Mm) | 16-6 | First. |
| | *755 | Anadikanta Chakrabarti (Mm) ... | 19-10 | First. |
| | *756 | Satischandra Chakrabarti (MLmMc) ... | 17-8 | First. |
| | | **Jhalakati Government High School.** | | |
| Bar. | 757 | Kshitischandra Guharay (Mm) ... | 17-1 | First. |
| | 758 | Nagendralal Baksi (M) | 18-6 | First |
| | 759 | Astaranjan Biswas ... | 18-7 | Second. |
| | 760 | Rajendranath Biswas ... | 19-3 | Second |
| | 761 | Ramkrishna Das ... | 18 2 | Second. |
| | | **Khalisakota H. E. School.** | | |
| | 762 | Jitendranath Ray ... | 20-1 | Third |
| | 766 | Narayanchandra Dasgupta (Mm) ... | 18-4 | First |
| | 768 | Debendranath Chattopadhyay . | 17-1 | Third, |
| | 771 | Birendranath Nag ... | 19 | Second |
| | 772 | Hiralal Chattopadhyay | 16-1 | First. |
| | 773 | Sudhirranjan Gupta ... | 19 8 | Second. |
| | 774 | Subodhchandra Das (M) | 16 1 | First |
| | 780 | Kader Ali Howlader ... | 20-1 | Second |
| | 781 | Abdul Hamid ... | 18 | Second |
| | | **Nalchira H. E. School.** | | |
| | 783 | Jyotirbhushan Gangopadhyay ... | 17-6 | Second |
| | 784 | Hiralal Sengupta ... | 18-1 | Second. |
| | | **Dehargati I. N. H. E. School.** | | |
| | 790 | Nakuleswar Chakrabarti | 20-2 | Third |
| | 792 | Sudhirranjan Basu ... | 20-3 | Second |
| | 794 | Jyotischandra Ray ... | 20 1 | Third. |
| | 796 | Chintanyalal Ghosh ... | 20-1 | Second |
| | | **Mahilara Anantanarayan H. E. School.** | | |
| | 798 | Sudhiranjan Senmajumdar (Mm) ... | 16 1 | First |
| | 799 | Nirmalchandra Sengupta .. ... | | First |
| | 801 | Madhusudan Bhattacharyya ... | 20-1 | Second |
| | 803 | Hemantakumar Das .. | 16-10 | Third |
| | | **Kadamtala George H. E. School.** | | |
| | 805 | Praphullasankar Mukhopadhyay ... | 18 | Second |
| | 806 | Kasiswar Biswas ... | 17-2 | First |
| | 808 | Saradacharan Samaddar | 19-8 | Second |
| | 809 | Nagendranath Sengupta ... | 18-8 | Second. |
| | 810 | Mahendranath Chattopadhyay ... | 18-11 | Second |
| | 811 | Binodlal Chakrabarti ... | 17 2 | Second |
| | 812 | Jadunath Brahma ... | 19-3 | Second |
| | 813 | Harischandra Chakrabarti ... | 20-7 | Second |
| | 814 | Phanibhushan Bhattacharyya ... | 17-1 | First |
| | 815 | Parsanath Mistri (M) ... | 17 | First. |
| | 816 | Saratchandra Chakrabarti ... | 19-4 | First. |
| | 817 | Upendranath Chakrabarti ... | 18-1 | Third. |
| | 818 | Jadabchandra Samaddar ... | 19 6 | Second. |
| | 819 | Gopalchandra Datta ... | 16-7 | First. |
| | 821 | Nisikanta Aich .. | 22-10 | Second. |
| | 824 | Joyen Uddin Mollick .. | 19-9 | Second |
| | 825 | Eusan Uddin Mridha ... | 18-6 | Second |
| | 827 | Abdul Gofur Molla .... | 18-1 | Second |
| | 828 | Amzad Ali Sheikh ... | 19-1 | Second |
| | | **Jhalakati Government High School.** | | |
| | 832 | Surendranath Mukhopadhyay ... | 16-3 | Second |

| Roll. | No. | Name. | Age. | Division in which the candidate has passed. |
|---|---|---|---|---|
| | | **Chandrahar H. E. School.** | | |
| Bar. | 833 | Meseruddin Howlader | 18-5 | First. |
| | 834 | Kshitischandra Das | 20-1 | Second |
| | 835 | Jitendralal Bandyopadhyay (M) ... | 16 2 | First. |
| | 836 | Debendranath Sengupta (m) ... | 17 3 | First |
| | 839 | Rajendranath Brahma | 17 4 | First |
| | 840 | Nalinikanta Soin ... | 18-1 | Second. |
| | 841 | Baradakanta De . | 16-6 | First |
| | | **Ulania Coronation H. E. School.** | | |
| | 842 | Rameschandra Ray ... | 16-1 | First |
| | 843 | Nagendranath Datta ... | 21-2 | Second |
| | 844 | Anantakumar De ... | 18-2 | Second |
| | 845 | Abdur Rab Chowdhuri | 18 | First. |
| | 848 | Abdul Jalil Choudhury | 17-7 | Second |
| | 849 | Syed Abdul Gani Miah (Mm) ... | 22 1 | First. |
| | | **Barisal Asmatalikhan Institution.** | | |
| | 850 | Syed Malik Hossain ... | 19-11 | Second |
| | 851 | Modasserali ... | 18-3 | Second |
| | 852 | Madhusudan Mistri .. | 17-6 | First |
| | 853 | Sachindranath Chakrabarti ... | 20 2 | Second |
| | | **Jalabari D. N. H. E. School.** | | |
| | 854 | Srikanta Chattopadhyay | 17-11 | Third |
| | 855 | Ramanibhushan Arch .. | 17-8 | Second. |
| | 861 | Bhubaneswar Chakrabarti ... | 18 6 | Second |
| | 868 | Hiralal Mukhopadhyay | 17-3 | Second. |
| | 872 | Saratchandra Mistri ... | 18-7 | Third. |
| | | **Balsari H. E. School.** | | |
| | 874 | Bhupendranath Basu (m) ... | 17-8 | First. |
| | 875 | Kalipada Chakrabarti... | 16-10 | First. |
| | 877 | Manindranath Ghosh (m) ... | 16 5 | First. |
| | 878 | Pramodbihari Guha ... | 16-7 | First. |
| | 879 | Praphullachandra Guha | 17 7 | First. |
| | 881 | Jitendranath Kanjilal... | 19-3 | Second. |
| | 882 | Subodhchandra Mukhopadhyay (Mm) ... | 18 1 | First. |
| | 883 | Maheswar Poddar ... | 17-2 | First. |
| | 884 | Sasibhushan Sarkar ... | 18-1 | Second |
| | 885 | Sachindranath Ghosh .. | 16-1 | Second. |
| | 887 | Md. Yusuf Ali ... | 17-2 | Third |
| | 888 | Md. Shamsul Hoque ... | 18-2 | Second |
| | 889 | Mahammod Jobed Ali | 18-1 | Second |
| | 890 | Sirajuddin Ahamed ... | 18-7 | Second |
| | | **Patuakhali J. H. E. School.** | | |
| | 891 | Saratchandra Das ... | 16-7 | Third. |
| | 894 | Sudhansuranjan Dasgupta ... | 16-4 | First |
| | 896 | Rameschandra Sengupta .. | 16-1 | First |
| | 898 | Prabalchandra Bandyopadhyay ... | 16-1 | First. |
| | 899 | Mir Moklessar Rahaman | 17-1 | Third. |
| | 901 | Jitendranath Dasgupta | 19-11 | Second |
| | 902 | Jamini mohan Datta ... | 17-1 | First |
| | 903 | Phatikchandra Datta ... | 17-5 | Second. |
| | 904 | Chittaranjan Sikdar ... | 16-2 | Second. |
| | 906 | Anukulchandra Arch ... | 20-1 | First |
| | 908 | Anilkumar Gangopadhyay (M) ... | 17-1 | First. |
| | 909 | Abaninohan Ghosh ... | 21-7 | Second |
| | 910 | Sanjibchandra Sengupta | 18-2 | Second. |
| | 911 | Sureschandra Majumdar | 18-2 | First. |
| | | **Patuakhali J. H. School.** | | |
| Bar. | 912 | Nagendranath Chattopadhyay ... | 16 | Second |
| | 913 | Jagatjiban Ray ... | 16-1 | First |
| | 914 | Jitendralal Mukhopadhyay ... | 20-4 | Second |
| | 915 | Haralal Bandyopadhyay ... | 16-11 | Second. |
| | 916 | Ganeschandra Chakrabarti ... | 16-6 | Third. |
| | 918 | Debaprasad Sengupta ... | 16 1 | Second. |
| | 920 | Abul Hossain Fazlal Bari ... | 16-3 | Second |
| | 921 | Amulyaratan Bandyopadhyay ... | 16 | Second |
| | 922 | Sailendranath Biswas ... | 17-8 | Second. |
| | 926 | Nur Mohammad ... | 18-10 | First. |
| | 927 | Nazmat Ally ... | 18-2 | First |
| | 928 | Mahammad Hayet Bhuiea ... | 17-9 | Third |
| | 931 | Md. Delwar Hossain Khan ... | 16 1 | Second |
| | 933 | Aminuddin Ahmed ... | 19-2 | Second |
| | 934 | Abdul Huque ... | 20-2 | First. |
| | 936 | Marjuddin Ahamed ... | 16-2 | Second |
| | 938 | Mahamed Emam Hossain ... | 18-2 | Second |
| | 940 | Md Abdul Wazed ... | 19-1 | Second. |
| | | **Kashipur H. E. School.** | | |
| | 942 | Harashit Bandyopadhyay ... | 21-1 | Second |
| | 943 | Krishnalal Kanjilal ... | 18 10 | Second |
| | 944 | Nandalal Nandi ... | 20 5 | Second |
| | 945 | Binodbihari Datta ... | 17 8 | Second |
| | 946 | Birajbihari Ghoshray ... | 17 10 | Third |
| | | **Barisal Model H. E. School.** | | |
| | 947 | Jamini mohan Acharyya | 16 7 | Second |
| | 949 | Akshaykumar Chattopadhyay ... | 17-3 | Second |
| | | **Baranadi H. E. School.** | | |
| | 950 | Taraprasanna De ... ... | | Second |
| | | **Chandrahar H. E. School.** | | |
| | 951 | Ramchandra Bandyopadhyay ... | 20-1 | Third. |
| | | **Bhola Government High School.** | | |
| | 953 | Rohiniranjan Majumdar | 19-6 | First |
| | | **Chandrahar H. E. School.** | | |
| | 954 | Jitendranath Chattopadhyay | 19-8 | Second |
| | | **Balsari H. E. School.** | | |
| | 956 | Santiranjan Das ... | 22 3 | Second. |
| | 965 | Narendranarayan Saha | 16-11 | Second. |
| | 966 | Satischandra Chattopadhyay ... | 17-4 | Second. |
| | 967 | Satyabhusan Chakrabarti ... | 19-3 | Third. |
| | | **W. B. Union Institution, Wazirpur.** | | |
| | 971 | Susilkumar Chakrabarti | 16 | Second. |
| | | **Balsari H.E. School.** | | |
| | 972 | Sureschandra Ghosh ... | 18-1 | Third. |
| | | **Bauphal H. E. School.** | | |
| | 973 | Gopalchandra Das ... ... | | First. |

| Roll. | No. | Name. | Age | Division in which the candidate has passed. |
|---|---|---|---|---|
| | | **Calcutta Brahmo Girls' School.** | | |
| Bar. F. | 1 | Kamala Sen (V) ... | ... | First |
| | | **Private Students.** | | |
| Bar. P. | 1 | Jadabchandra Pal ... | 21-2 | Second. |
| | 2 | Narendranath Sengupta | 18 10 | Second |
| | 3 | Debendrachandra Pal | 20 8 | Second |
| | 4 | Debabrata Das ... | 19-10 | Third |
| | 5 | Goneschandra Chakladar | 24-1 | First |
| | | **Teacher.** | | |
| Bar. T. | | Sachindranath Pal | 34-7 | First |
| | | **Chaugram H. E. School.** | | |
| Baul. | | Sudhirendranath Ray (MLm) ... | 16 1 | First |
| | | Sambhucharan Mistri (MLm) .. | 17-7 | First |
| | 3 | Suryyakumar Deb (M) | 16-1 | First |
| | 4 | Bijaychandra Karmakar (M) ... | 16-1 | Second. |
| | 5 | Ramendranath Dhar ... | 18-10 | Second |
| | 7 | Manindramohan Bhadra | 16-2 | Second |
| | 8 | Md. Safi Uddin . | 20-1 | First |
| | 9 | Tafar Uddin Mandal . . | 18 3 | Third |
| | 10 | Md Jamir Uddin ... | 24 | Second |
| | | **Rajshahi Collegiate School.** | | |
| Baul. | 11 | Bimalendu Bhattacharyya ... | 20-8 | Second |
| | 12 | Krishnalal Chattopadhyay (m) .. | 17-3 | First |
| | 13 | Sudhirmohan Gangopadhyay (m) ... | 16 3 | First |
| | 14 | Sachindrakumar Lahiri | 16-4 | Second |
| | 15 | Jyotidas Maitra ... | 19 4 | First. |
| | 16 | Ramnath Ram (M m). . | 16-11 | First |
| | 17 | Jogesgobinda Sarkar (Mlm) ... | 16-1 | First |
| | 18 | Nabamkrishna Sarkar... | 19-6 | First |
| | 20 | Subodhkanta Chaudhuri (Mm) ... | 16-3 | First |
| | 21 | Arunkumar Datta (Mm) ... | 16 5 | First |
| | 22 | Ajitkumar Guha (Mm) | 16-6 | First. |
| | 23 | Jogiswar Lahiri (Mm) | 19-7 | First |
| | 24 | Chandranath Maitra ... | 20-4 | Second |
| | 25 | Debendranath Saha ... | 19-5 | Second |
| | 26 | Sachindralal Acharyya | 16 | Second |
| | 27 | Panchanan Bagchi ... | 17-9 | First |
| | 28 | Nareschandra Bandyopadhyay ... | 18 | Second |
| | 29 | Bisweswar Chakrabarti | 16 7 | Second |
| | 30 | Samarjitkumar Datta | 19 | First |
| | 31 | Gokulchandra Goswami | 18-11 | Second |
| | 32 | Hemendranath Guptabhaya ... | 18-8 | Second. |
| | 33 | Prakaschandra Lahiri (ML) ... | 16-3 | First |
| | 34 | Nanigopal Mukhopadhyay ... | 16-1 | First |
| | 35 | Ramanath Mukhopadhyay ... | 16-4 | Second |
| | 36 | Shashtincharan Mukhopadhyay ... | 19-1 | Second |
| | 37 | Gaurgobinda Saha ... | 16-1 | Second. |
| | 38 | Sudhansumohan Chaudhuri ... | 20 1 | First. |
| | 39 | Himadriranjan Dasgupta (M) ... | 16 11 | First. |
| | *40 | Ismail Hossain Mondal (MVm) ... | 16-8 | First |
| | | **Rajshahi Collegiate School.** | | |
| Baul. | 41 | Mirza Md Mazirud din ... | 17-4 | Second. |
| | 42 | Shaikh Sekandar (M)... | 17-11 | First. |
| | 43 | Abdur Rahman . . | 17-7 | Second |
| | 44 | Md. Yasin Ali ... | 17 11 | Second |
| | 45 | Shajuddin Miah ... | 19-1 | Second. |
| | | **Arani Manomohini H. E. School.** | | |
| | 47 | Praphullanath Goswami (M) ... | 16-2 | First |
| | 48 | Surendranath Pal ... | 16-6 | Second |
| | 49 | Sureschandra Sur (M) | 17 9 | First |
| | 50 | Srischandra Niyogi ... | 17-7 | Third |
| | 53 | Nareshnarayan Ray ... | 16-1 | Second |
| | 55 | Abdul Sobahn Sarkar . | 16-1 | Second |
| | 56 | Dabiruddin Sircar ... | 20 | First |
| | | **Chak Atitha H. E. School.** | | |
| | 57 | Brajendranath Ghosh | 21-6 | Third |
| | 60 | S M Moazzom Ali (H) | 16 5 | First |
| | 61 | S Din Mohammed ... | 19-8 | Second |
| | 62 | Md Mozaffer Hossain | 16 6 | First |
| | 63 | Md Karim Uddin .. | 16 4 | Second |
| | 64 | Mouzzem Hossein Khan | 21-6 | Second |
| | 69 | Bijaykrishna Das ... | 22-2 | Second |
| | | **Nator Maharaja's High School.** | | |
| | 70 | Sailendrakumar Sanyal (Mm) ... | 17-2 | First |
| | 71 | Samarendranath Siddhanta (M) . | 17 5 | First |
| | 72 | Nagendrakumar Saha... | 18 2 | First |
| | 73 | Brajendrakumar Saha.. | 18-3 | Second |
| | 74 | Nareschandra Talapatra (M) ... | 16 | First |
| | | **Puthia P. N. H. E. School.** | | |
| | 76 | Saradindunath Chaudhuri ... | 17 4 | Second |
| | 79 | Saileschandra Sanyal (M) ... | 17-1 | First |
| | 80 | Sachindranarayan Sanyal ... | 17-11 | First |
| | 81 | Niladrikrishna Sarkar (M) ... | 16-7 | First |
| | 82 | Sachindramohan Datta | 20-1 | Second |
| | 83 | Manindrakumar Goswami .. | 17-11 | Second |
| | 87 | Azimuddin Mondal . | 18-9 | First |
| | 90 | Shah Mahamod Sarkar | 17-1 | Second |
| | | **Dighapatiya P. N. High School.** | | |
| | *91 | Gopendrachandra Sarkar (MLVm) ... | 16-3 | First |
| | 92 | Jogendranath Saha (MV) ... | 20-2 | First |
| | 93 | Srigobinda Saha (MmG) ... | 17-3 | First. |
| | 94 | Jatindranath Biswas ... | 17 1 | Second |
| | 95 | Harendranath Deb ... | 18-10 | Second |
| | 96 | Sibeswar Mani . | 18-3 | First |
| | 97 | Charumohan Thakur ... | 17-9 | Second |
| | 99 | Gokulbihari Rakshit ... | 16-3 | Second |
| | 100 | Jagadischandra Talapatra (M) ... | 19-2 | First |
| | 101 | Chintaharan Saha ... | 19-11 | First |
| | 102 | Shaikh Md Mozhar Ali (Ll) ... | 17-10 | First |
| | 103 | Shamsul Hoda Ahmed ... | 16-4 | First. |
| | 104 | Tasir Uddin Mandal (I) ... | 19 1 | First. |

| Roll. | No. | Name. | Age | Division in which the candidate has passed. |
|---|---|---|---|---|
| | | **Nator Maharaja's High School.** | | |
| Baul. | 105 | Mohammed Habibur Rahman ... | 17-8 | First |
| | 106 | Ahmed Ali ... | 16-11 | First. |
| | 107 | Basudeb Bhattacharyya ... | 20-11 | First |
| | 108 | Khagendraprasad Chakrabarti ... | 17-6 | Second |
| | 109 | Surendranath Chakrabarti (Mm) ... | 16-4 | First |
| | 110 | Pramathachandra Horray (Mm) ... | 18-9 | First |
| | 111 | Md. Rahaman Ali ... | 16-7 | First |
| | 112 | Biswesawar Majumdar... | 16-8 | First |
| | 113 | Ramkrishna Pal ... | 18 | Second |
| | 115 | Ramnarayan Deb (Mm) ... | 16 6 | First |
| | 116 | Kshitindramohan Maitra .. | 18-7 | First |
| | 117 | Bhabatosh Bhattacharyya . | 19 1 | Second |
| | 118 | Muralidhar Chakrabarti ... | 18 | First |
| | 120 | Dwijendranarayan Raychaudhuri ... | 17-6 | Second |
| | 121 | Nikunjabihari Basak . | 22-6 | Third |
| | 122 | Surendranarayan Deb | 17-1 | Second |
| | 123 | Md Abdul Gaffur Khalifa .. | 19-6 | Second |
| | 126 | Upendranath Pain ... | 18-5 | Second. |
| | | **Rajshahi Bholanath Academy.** | | |
| | *127 | Kamakhyadas Gupta (MLVm) ... | 16-7 | First |
| | 128 | Surendranath Ghosh (Mm) ... | 20-8 | First |
| | 129 | Dwijesgobinda Sen ... | 18 | Third |
| | 131 | Amulyakumar Bishi (M) | 17-9 | Second |
| | 132 | Tarapada Ray ... | 18 5 | Second |
| | 133 | Sachindranath Kundu (m) ... | 16-8 | First |
| | 135 | Nripendranath Datta ... | 18-7 | First |
| | 136 | Kshitischandra Nandi ... | 16-3 | Second. |
| | 137 | Kedarnath Pal ... | 17-7 | First |
| | *139 | Nareschandra Talukdar (MLm Mc) ... | 17-1 | First. |
| | 140 | Sanjibchandra Bhattacharyya (m) ... | 17-5 | First |
| | 141 | Prabhaschandra Sarkar | 19 | Second |
| | 142 | Sudhirananda Ray (m) ... | 16 5 | First. |
| | 143 | Sudhansubhushan Bandyopadhyay (M) ... | 16-4 | First |
| | 144 | Harischandra Goswami (M) ... | 18-7 | First |
| | 146 | Debabrata Bagchi (M)... | 16-8 | First |
| | 147 | Sarojkumar Gangopadhyay ... | 16 5 | First |
| | 149 | Anadikanta Dasgupta .. | 19-4 | Second. |
| | 150 | Sudhirkumar Ray ... | 16-11 | Second |
| | 152 | Jogeschandra Chaki ... | 17-3 | First |
| | 154 | Birendranarayan Sarkar | 16-11 | First |
| | 155 | Asutosh Chaudhuri ... | 16-4 | Second |
| | 156 | Prabhaschandra Chaudhuri ... | 17 | Second |
| | 157 | Nalinmohan Chaudhuri ... | 19-10 | Second |
| | 158 | Saradindunath Mitra ... | 16-6 | First |
| | 159 | Bireschandra Chakrabarti ... | 16-6 | Second. |
| | 160 | Mahendrakumar Acharyya ... | 16-9 | First. |
| | 161 | Asalatzzaman Tarafder | 19 | First |
| | 163 | Mohammed Israil Shah | 20-1 | First. |
| | 164 | Khondker Kasimuddin Ahmed ... | 21 1 | Second |
| | 165 | Mohammad Inshaullah | 17-5 | First. |
| | | **Dubalhati Raja Haranath H. E. School.** | | |
| Baul. | 169 | Sureschandra Potadar (MV) ... | 17-9 | First. |
| | 173 | Md Mahiruddin ... | 21-7 | Second |
| | 176 | Tayabuddin Mondal ... | 16-2 | Second |
| | | **Kamargaon Maharaja Sir Manindrachandra H. E. Institution.** | | |
| | 180 | Upendranath Maitra ... | 20-1 | Second |
| | | **Puthia P. N. H. E. School.** | | |
| | 182 | Susilchandra Sanyal ... | 16-3 | First. |
| | | **Murshidabad Nawab Bahadur's Institution.** | | |
| | 183 | Mohammed Afsaruddin Miah | 18-8 | Second. |
| | | **Private Students.** | | |
| Baul. P. | 1 | Sudhirkumar Bagchi ... | 22-9 | Second |
| | 2 | Surendrakumar Adhikari ... | 22-4 | Second |
| | 3 | Abinaschandra Das | 18-1 | First |
| | | **Teacher.** | | |
| Baul. T. | 1 | Md Yunus Rahman | 27-11 | First |
| | | **Salar Edward H. E. School.** | | |
| Ber. | 1 | Abhayapada Mukhopadhyay ... | 17-6 | Second |
| | 10 | Jnanendranath Bhattacharyya ... | 23 9 | Second |
| | 11 | Kalikumar Mukhopadhya ... | 18-4 | Second |
| | 14 | Choudhury Abdul Hamid ... | 18 3 | First |
| | 17 | Shaikh Jasimuddin ... | 19-3 | Second |
| | 18 | Ali Hossain ... | 17-11 | First |
| | 19 | Abdur Rahim .. | 21-6 | Second |
| | | **Khagra L. M. S. H. E. School.** | | |
| | 22 | Balamath Chaudhuri ... | 19 | Second |
| | 23 | Baidyanath Pal ... | 17 4 | First. |
| | 24 | Manindramohan Datta | 15-8 | First. |
| | 25 | Panchugopal Goswami | 18-7 | First. |
| | 27 | Syamapada Chattopadhyay ... | 16-2 | First |
| | 28 | Rammohan Ghosh (L) | 16-5 | First |
| | 29 | Jagadananda Datta (Lm) ... | 17-11 | First |
| | *30 | Prabhatkumar Mallik (MLml) ... | 16 1 | First. |
| | *31 | Ajodhyanath Niyogi (MLml) ... | 17-9 | First |
| | *32 | Nagendrakumar Ray (MLml) ... | 16-10 | First. |
| | 33 | Tarapada Biswas ... | 20-1 | Second |
| | 34 | Jyotischandra Das ... | 17 9 | Second |
| | 35 | Ambikaprasad Bhattacharyya ... | 20-3 | First. |
| | 36 | Sasankasekhar Chattopadhyay ... | 18-3 | Second |
| | 37 | Amulyakrishna Mukhopadhyay ... | 16-3 | First. |
| | 38 | Rabindranath Sarkar ... | 16-1 | First |
| | 39 | Bimanesbhushan Chattopadhyay ... | 17-3 | First. |

**Jamsherpur B. N. H. E. School.**

| Roll | No | Name. | Age | Division in which the candidate has passed |
|---|---|---|---|---|
| Ber. | 40 | Ramranjan Chakrabarti (MLml) ... | 16-10 | First |
| | 41 | Murarimohan Pal ... | 18-1 | First |
| | 42 | Ramaprasad Biswas (Mm) ... | 17 2 | First |
| | 43 | Mansindranath Pal ... | 21-9 | First |
| | 44 | Mohitkumar Bagchi ... | 17 4 | First |
| | 45 | Ramakanta Ray ... | 18 4 | First |
| | 46 | Surendranath Ray ... | 19-3 | First |
| | 47 | Girijabhushan Ray ... | 19 | Second |
| | 48 | Lalitmohan Biswas ... | 18-8 | First |
| | 49 | Ramendranath Chaudhuri ... | 17-8 | First |
| | 50 | Sudhirkumar Ray .. | 16 8 | First |
| | 51 | Atindrachandra Bagchi | 17 6 | First |
| | 52 | Sudhansusekhar Chakrabarti . | 18 4 | Second |
| | 53 | Ichharuddin Biswas .. | 19-2 | Second |

**Jamshedpur Krishnath Collegiate School.**

| | | | | |
|---|---|---|---|---|
| | 54 | Adideb Sen (M) .. | 16-1 | First |
| | 55 | Saktipada Sanyal (m) .. | 16-5 | First |
| | 56 | Gadadhar Ray (Mm) .. | 17-4 | First |
| | 57 | Sitansubhushan Mukhopadhyay ... | 19-3 | First |
| | 58 | Aswinikumar Mukhopadhyay (MLml) . | 16-7 | First |
| | 59 | Saradindubhushan Majumdar (MLml) | 17-7 | First |
| | 60 | Pramathakumar Ghosh | 23 3 | Second |
| | 61 | Kumarkrishna Ghosh. | 16 | First |
| | 62 | Birendranath Chattopadhyay (ml) .. | 18-8 | First |
| | 63 | Khudendranath Bhattacharyya (Mml) ... | 16 5 | First |
| | 64 | Kalidas Basu (Mml) | 17 3 | First |
| | 65 | Gurudas Basu ... | 17 8 | First |
| | 66 | Amarendranath Bandyopadhyay (Lm) ... | 17-4 | First |
| | 67 | Manojmohan Sarkar (Mm) . | 16 | First |
| | 68 | Sudhansusekhar Ghosh (MmMc) .. | 16-2 | First |
| | 69 | Murahimohan Biswas (MmMc) . | 17 2 | First |
| | 70 | Basantakumar Basu (Mm) .. | 16-2 | First |
| | 71 | Sisirkumar Bandyopadhyay .. | 17-2 | First |
| | 72 | Parimalchandra Sen . | 16 | Third |
| | 73 | Sudhirkumar Sarkar . | 17 10 | Second |
| | 74 | Ritendranath Ray chaudhuri ... | 23-4 | First |
| | 75 | Kamalaranjan Ray ... | 16 8 | First |
| | 76 | Banamali Pal ... | 16-5 | Second |
| | 77 | Chandrasekhar Mukhopadhyay .. | 16-3 | First |
| | 78 | Bibhutibhushan Dasgupta ... | 16-9 | First |
| | 79 | Tararanjan Chattopadhyay. . | 17-1 | Second |
| | 80 | Praphullakumar Chattopadhyay ... | 18-6 | Second |
| | 81 | Anadinath Bhattacharya ... | 17-3 | Second |
| | 82 | Shambhukumar Basu... | 17-3 | First. |
| | 83 | Satyendranath Bandyopadhyay ... | 18-8 | Second |
| | 84 | Manimohan Bandyopadhyay ... | 17 | Second |
| | 85 | Jitendranath Bandyopadhyay (MVI) ... | 16 | First, |
| | 86 | Sisirkumar Bagchi ... | 21 | Second |
| | 87 | Sureschandra Sinha ... | 18-2 | Second |
| | 88 | Manmathakumar Ghosh | 19-1 | Third |
| | 90 | Kshirodgopal Pal ... | 20-3 | Second |

**Jamshedpur Krishnath Collegiate School.**

| | | | | |
|---|---|---|---|---|
| Ber. | 91 | Amarendranath Ghosh | 17-5 | Second |
| | 92 | Bimalchandra Gupta | 18 9 | Third |
| | 93 | Santoshkumar Guha ... | 19 6 | Second |
| | 94 | Rabindranath Bandyopadhyay ... | 16 2 | Second |
| | 95 | Binaykrishna Thakur | 17-9 | First |
| | 96 | Jagannath Gangopadhyay | 16 | First |
| | 97 | Nirmalbhushan Chanda | 18 10 | Second |
| | 98 | Satyaranjan Arulananthan ... | 17 1 | Second |
| | 99 | Renupada Sen .. | 16 2 | First |
| | 100 | Nambhushan Sarkar .. | 18 11 | Second |
| | 101 | Sudhansumohan Sen ... | 16-2 | First |
| | 102 | Jyotischandra Saha .. | 16-3 | First |
| | 103 | Charupada Bhattacharyya ... | 18 2 | Third. |
| | 104 | Satinath Bhaduri .. | 18-2 | First |
| | 105 | Kazi Nurul Alam | 18-8 | First |

**Baraia Ramdas Sen H. E. School.**

| | | | | |
|---|---|---|---|---|
| | 106 | Abhibhushan Bandyopadhyay . | 20 | Second |
| | 107 | Sasankasekhar Chattopadhyay . | 16 11 | Second |
| | 109 | Aswinikumar Bandyopadhyay ... | 17-11 | First |
| | 113 | Mozzammel Hossain Molla .. | 21 1 | Third |

**Baidanga G. S. H. E. School.**

| | | | | |
|---|---|---|---|---|
| | 115 | Tenajaddin Biswas . | 19 1 | Second |
| | 117 | Abdul Hasab .. | 18-7 | Second |
| | 122 | Manoranjan Lala ... | 17-3 | Second |
| | 125 | Krishnagopal Bandyopadhyay ... | 19-10 | First |
| | 126 | Abanischandra Chattopadhyay (MLml) ... | 17 5 | First |
| | 127 | Charupada Pal . | 19 10 | First |
| | 128 | Abanibhusan Biswas .. | 18-11 | Second. |
| | 129 | Shovan Ali Sheikh ... | 19-3 | First |
| | 131 | Bhagabatbhushan Malakar ... | 21-2 | First |
| | 132 | Sudhiranjan Ray (m) .. | 17 | First. |
| | 134 | Annadabhushan Pal ... | 20-3 | Second |
| | 138 | Siddhinath Ray (M) .. | 18 | Second |

**Saidabad Hardinge H. E. School.**

| | | | | |
|---|---|---|---|---|
| | 139 | Satyendranath Bandyopadhyay ... | 17-3 | First. |
| | 140 | Sailendranath Bandyopadhyay ... | 18 | First |
| | 141 | Gaurgopal Bijaypuri ... | 19-1 | First. |
| | 142 | Ramgopal Chattoraj (MVm) ... | 17 | First |
| | 143 | Umapada Datta (Mm) | 18-10 | First |
| | 144 | Binaykrishna Goswami | 18 11 | First |
| | 145 | Birendrakrishna Mitra | 17 6 | First |
| | 146 | Sarasimohan Mukhopadhyay ... | 19-5 | Second. |
| | 148 | Ramendranath Ray .. | 17-9 | First |
| | 149 | Balaram Sarkar ... | 18-9 | First |
| | 150 | Bindyanath Sarkar (m) | 17-3 | First |
| | 151 | Sibnandan Saha ... | 19-1 | Second |
| | 152 | Jibankrishna Saha ... | 18-1 | Second |
| | 155 | Satchidananda Bhattacharyya ... | 17 11 | Second. |
| | 161 | Jyotischandra Thakur | 21-3 | Third |

| Roll. | No | Name | Age. | Division in which the candidate has passed. |
|---|---|---|---|---|
| | | **Gorabazar Iswarchandra Institution.** | | |
| Ser. | 162 | Golam Mohammed Pramanik ... | 20 2 | Second |
| | 163 | Mahammad Giasuddin | 17 8 | First |
| | 166 | Abdur Rahaman Khan | 18-1 | Second |
| | 167 | Mahammad Ismail .. | 22-3 | Second |
| | 168 | Rashid Ahmed .. | 17-8 | Second |
| | 170 | Belayet Hossain Biswas .. | 22 4 | Second |
| | 172 | Kazi Azizul Hoque ... | 21-2 | Third |
| | 174 | Saileskumar Adhikari (m) ... | 18-10 | Second |
| | 175 | Phanindranath Mukhopadhyay (m) ... | 16-4 | First |
| | 177 | Tulsidas Tewari ... | 16-8 | Second |
| | 178 | Nakuleswar Bandyopadhyay ... | 17 2 | First |
| | 183 | Kalipada Ghosh ... | 16 3 | First |
| | 185 | Susirkumar Depramanik | 16-4 | First |
| | 187 | Gobindachandra Biswas | 21 8 | Second |
| | 188 | Bibhutibhushan Goswami ... | 20 | Second |
| | 190 | Jitendrakrishna Ghosh (Mml) ... | 16-3 | First |
| | 192 | Sasankasekhar Chandra | 20-4 | First |
| | 193 | Susilchandra Das ... | 19-3 | Second |
| | 194 | Indubikas Gangopadhyay ... | 18-3 | First |
| | 195 | Nanigopal Mukhopadhyay ... | 20-6 | Second |
| | 196 | Tulsidas Adhikari .. | 18-4 | First |
| | 197 | Amarupendra Mallik ... | 17-2 | Second |
| | 198 | Jitendranath Adhikari | 18-3 | Second |
| | 199 | Bhubaneswar Raychaudhuri .. | 20-2 | Third |
| | 203 | Gopendrakrishna Sen ... | 20-2 | Third |
| | 207 | Charuchandra Guhakhasnabis ... | 18 2 | Third |
| | 208 | Satkari Mukhopadhyay | 22-2 | Second |
| | 209 | Nakarichandra Sarkar | 18-3 | Second |
| | 211 | Sudhirkumar Majumdar | 18-4 | Second |
| | 217 | Bibhutibhushan Sinha | 19-1 | Second |
| | 218 | Bimalendusekhar Bagchi ... | 16-7 | Second |
| | 219 | Bijaybhushan Sarkar .. | 16-6 | Second |
| | | **Private Student** | | |
| | 221 | Hemchandra Basu ... | 17-9 | Second |
| | | **Gorabazar Iswarchandra Institution.** | | |
| | 223 | Sachindranath Sen ... ... | | Second |
| | | **Murshidabad Nawab Bahadur's Institution.** | | |
| | 224 | Sisirkumar Bandyopadhyay | 16 5 | First |
| | 225 | Kiritibhushan Gangopadhyay ... | 16-5 | First. |
| | 226 | Kshitischandra Mandal (Vm) ... | 17-4 | First |
| | 227 | Saurendranath Datta (m) ... | 17 2 | First |
| | | **Saktipur K. M. C. Institution.** | | |
| | 228 | Pramathanath Dhar (m) | 18-10 | First. |
| | 229 | Bhujangabhushan Sarkar ... | 16-8 | First. |
| | 230 | Twishampati Mukhopadhyay ... | 19 | Second |
| | 231 | Sachinandan Ray ... | 17-9 | First. |
| | 232 | Basantakumar Biswas | 21-11 | Second. |
| | 233 | Kundalibhushan Bhattacharyya ... | 19-2 | Second |
| | 234 | Tritapharan Gupta ... | 22-10 | First |

| Roll | No | Name. | Age. | Division in which the candidate has passed |
|---|---|---|---|---|
| | | **Dhoradaha H. E. School.** | | |
| Ser. | 235 | Iakubkari Kar ... | 20 2 | First |
| | 236 | Shaikh Noor Mahammed (M) . | 19-2 | First |
| | *237 | Amiyakumar Bagchi (MLml) ... | 17-1 | First. |
| | 238 | Manikchandra Bhattacharyya ... | 16-1 | First |
| | 239 | Srikumar Saha (m) ... | 18-4 | First. |
| | 240 | Rabindrakumar Bhaduri | 17 | Second |
| | 241 | Bashiruddin Biswas .. | 20-4 | First |
| | 242 | Atahar Ali Biswas ... | 20-1 | Second. |
| | | **Kanchantala J. D. J. Institution.** | | |
| | 244 | Shiva Narayan Lal ... | 19-4 | Third |
| | 245 | Raghunandan Prasad ... | 20 | Second. |
| | 248 | Gopalchandra Chaudhuri .. ... | 20-4 | Second |
| | 250 | Birendramohan Ghosh | 16-10 | Second |
| | 252 | Aswinikumar Mitra ... | 16-4 | First |
| | 253 | Ramanath Pande ... | 23-11 | Second |
| | 254 | Bibhutibhushan Ray ... | 16 | First |
| | 257 | Jaminikanta Basu ... | 17-2 | Third |
| | 258 | Prabodhkumar Basu ... | 16-2 | Second |
| | 259 | Sauriindranath Basu (V) | 16-3 | First |
| | 260 | Dulalchandra Chattopadhyay .. | 18 | Third |
| | *261 | Mihirbhushan Das (ML Vml) .. | 17 5 | First |
| | 262 | Niratan Karmakar ... | 17 7 | First |
| | 263 | Saratchandra Khan .. | 17 5 | Second. |
| | 265 | Mamlal Gangopadhyay | 18 1 | Third |
| | 266 | Indramani Adhikari ... | 20-1 | Third |
| | 269 | Sabiruddin Ahamed ... | 16-4 | Second |
| | 270 | Mahammad Faizuddin | 19 | Second |
| | 271 | Tamijuddin Biswas ... | 16-5 | Second |
| | 272 | Mohamad Abdul Gafur | 17-5 | Second |
| | 274 | Mohammed Zainul Abdin ... | 17-2 | Second |
| | 275 | Sheonandan Prasad ... | 19 | Second. |
| | 276 | Mohammad Kabiruddin | 19 | Second. |
| | | **Murshidabad Nawab Bahadur's Institution.** | | |
| | 277 | Samiruddin Ahmed ... | 18-3 | Second. |
| | 278 | Muralimohan Das ... | 18 8 | First |
| | 279 | Gopendranath Mitra ... | 16-5 | Second |
| | 280 | Sanatkumar De ... | 18-7 | Second |
| | 281 | Binaybhushan Das (ml) | 16-11 | First |
| | *282 | Parbaticharan Sarkar (ML ml) ... | 16-4 | First |
| | *283 | Subodhiranjan Sen (ML ml) ... | 16-2 | First |
| | 284 | Dhirendranath Sarkar (Mm) ... | 17-4 | First |
| | 285 | Jagannath Pande ... | 18-10 | Third |
| | 286 | Tripuraranjan Datta ... | 17-2 | First |
| | 287 | Purnendu Ghosh (m) ... | 16-8 | First |
| | 289 | Hrishikesh Chattopadhyay ... | 18-1 | Second |
| | 290 | Hemantakumar Ghosh | 17-6 | First. |
| | 291 | Phambhushan Das ... | 18-2 | Second |
| | 292 | Manindranath Chakrabarti ... | 23-1 | Second. |
| | 294 | Phanibhushan Saha ... | 16-7 | First. |
| | 295 | Binayranjan Ray ... | 16 2 | Second. |
| | 296 | Nrityagopal Das ... | 19-8 | First. |
| | 297 | Madanmohon Chattopadhyay ... | 17-2 | Second |
| | 298 | Subhransubhushan Ray | ... | Second. |
| | 299 | Baidyanath Chakrabarti ... | 16-2 | Second. |
| | 300 | Mahammad Abdul Wahed ... | 16-11 | Second. |
| | 301 | Md. Maqsud Hossain (m) ... | 17-2 | First. |

| Roll. | No. | Name | Age | Division in which the candidate has passed |
|---|---|---|---|---|
| | | **Murshidabad Nawab Bahadur's Institution.** | | |
| Ser. | 302 | Shaikh Manwar Hossain ... | 20-5 | First |
| | 303 | Mahammad Hossain Chowdhury ... | 18 2 | Second |
| | 304 | Shaikh Nasiruddin ... | 17 | First |
| | 311 | Syed Wali Hasum .. | 17 11 | First |
| | 313 | Md Rahat Ali Khan ... | 21 3 | First |
| | | **Laigola M. N. Academy.** | | |
| | 315 | Raghunath Prashad ... | 18-4 | Second |
| | 316 | Nagendranath Munsi (m) .. | 22 10 | First |
| | 317 | Tinkari Chattopadhyay ... | 20-2 | First |
| | 319 | Jatindranath Mandal .. | 20 9 | First |
| | 320 | Manindranath Mattra (Mm) ... | 17-9 | First |
| | 321 | Karunasindhu Das .. | 16 3 | First |
| | 324 | Parbaticharan Chattopadhyay (m) ... | 16 2 | First |
| | 325 | Sitikantha Pramanik .. | 21 11 | Second |
| | 326 | Kalipada Sinha ... | 16-7 | First |
| | 327 | Harendranath Lala (m) | 17-1 | First |
| | 328 | Ganeschandra Das . | 17-3 | Second |
| | 329 | Satyacharan Biswas (V) | 19-7 | First |
| | 330 | Bimalkrishna Ray chaudhuri | 16-4 | Second |
| | 331 | Kamalkrishna Raychaudhuri (Mm) | 16 3 | First |
| | 332 | Gurupada Sarkar (MLVml) | 17 4 | First |
| | 333 | Digendranath Mukhopadhyay | 18 1 | First |
| | 334 | Dharandhar Sinha (M) | 16 11 | First |
| | 335 | Syamdas Mandal . | 20 1 | First |
| | 337 | Abdul Aziz Shaikh ... | 18-7 | First |
| | 338 | Durgacharan Pal . | 17 7 | Second |
| | 340 | Jnanendranath Pande | 20-6 | Second |
| | 342 | Sureschandra Ray | 19 | Second |
| | 344 | Jitendranath Jha | 17 3 | First |
| | 345 | Dineschandra Bhattacharyya ... | 17 5 | Second |
| | 346 | Sannyasicharan Sinha | 16 9 | Second |
| | 347 | Sambhunath Khamaru | 17 2 | First |
| | 348 | Rameschandra Datta ... | 19-4 | First |
| | 349 | Bibhutibhushan Ray | 19 9 | Second |
| | 350 | Amiyakumar Majumdar (MV) .. | 19 4 | First |
| | 352 | Mahabirprasad Misra | 25 | Third |
| | 354 | Nagendranath Sarma .. | 18 3 | Third |
| | 355 | Mahadeb Mukhopadhyay . | 18-9 | First |
| | 356 | Momtaz Hossain Khan | 21 6 | Third |
| | 357 | Ataur Rahaman ... | 21 3 | Second. |
| | 358 | Idris Ahammad ... | 17-3 | Second |
| | 359 | Md. Mobarok Hossain Meah ... | 22 5 | Second |
| | 360 | Maizuddin Ahmed . | 18-1 | First |
| | 363 | Kshitischandra Pal .. | 20 | Second |
| | 364 | Mohammad Fazlay Hoque ... | 18-2 | First |
| | 367 | Mohammad Sabder Aly ... | 24 11 | Second |
| | 368 | Mohammad Amuddin | 17-2 | First. |
| | 369 | Mahammad Naimuddin Serker (Mm) ... | 17-11 | First |
| | 370 | Mahammad Mohsenali Khan ... | 18-11 | Second |
| | 371 | Hafizuddin Ahmed ... | 17-2 | First |
| | | **Jangipur H. E. School.** | | |
| | 374 | Dost Mahammad Khan | 23 7 | First. |
| | 375 | Shaikh Mahammed Nurul Haque (MLm) | 16-3 | First. |
| | 376 | Nrityagopal Chakrabarti (Mm) ... | 17-9 | First |
| | | **Jangipur H. E. school.** | | |
| Ser. | 377 | Dhanapati Mandal .. | 19 | Second |
| | 378 | Gopinath Das (Mm) | 20 5 | First |
| | 379 | Gopeswar Sahapramanik .. | 20 4 | First |
| | 380 | Bidhubhushan Das (m) | 18-1 | First |
| | 382 | Debendrachandra Ray (M) .. | 16 4 | First |
| | 383 | Sripatinath Chakrabarti (MVm) .. | 17-2 | First |
| | 384 | Sarojmohan Das (Mm) | 16-2 | First |
| | 385 | Mohinimohan Datta (m) . | 17-7 | First |
| | 386 | Brajendrakumar Das (Mm) .. | 16 4 | First |
| | 387 | Gobindaprasad Gupta (MVml) .. | 16-3 | First |
| | 388 | Surendranarayan Das .. | 17-5 | Second |
| | 389 | Pankajkumar Ray ... | 18 1 | Third |
| | 390 | Raghunath Das . | 18-7 | Third |
| | 392 | Charuchandra Bhattacharyya ... | 18 7 | Third |
| | 393 | Panchanan Mukhopadhyay ... | 16-6 | First |
| | 395 | Gopalchandra Basu ... | 16-11 | Second |
| | 396 | Kumarischandra Pramanik . | 17 2 | Second |
| | 397 | Narsinhaprasad Bhakat | 18 1 | Second |
| | | **Chakdighi S. P. Institution.** | | |
| | 400 | Nandalal Mukhopadhyay .. | 17-2 | First |
| | | **ganj Edward Coronation H. E. School.** | | |
| | 401 | Akshaykumar Ray (V) | 16 10 | First |
| | 402 | Banwarilal Lala .. | 17 8 | First |
| | 403 | Gunendranath Majumdar (MV) | 16 3 | First. |
| | 404 | Jugalcharan Mandal . | 24-5 | First |
| | 405 | Kartikchandra Josh . | 17 1 | Second |
| | 407 | Narendranath Datta .. | 19 | Second |
| | 408 | Sachchidananda Mitra | 16 6 | First. |
| | 411 | Sanatkumar Sengupta (V) . | 17-7 | First |
| | 412 | Durgagati Acharyya (V) ... | 17 | First |
| | 413 | Hrishikes Das (V) .. | 18 5 | Second |
| | 414 | Lakshmikanta Bhattacharyya .. | 18-2 | Second |
| | 415 | Prangobinda Pathak ... | 18-3 | Second |
| | 416 | Nanigopal Basumallik (V) ... | 17-6 | First |
| | | **Bhagirathpur H. E. School.** | | |
| | 417 | Karimuddin Mandal . | 19-5 | Second |
| | 418 | Nanigopal Das ... | 21 7 | First |
| | 420 | Aswinikumar Ray ... | 18-7 | Third |
| | | **Islampur H. E. School.** | | |
| | 422 | Krishnaballabh Biswas | 17-8 | First |
| | 423 | Hemendrakumar Bhaumik | 16 2 | First |
| | 425 | Akkelai Sarker | 19 | Second |
| | | **Srikhanda H. E. School.** | | |
| | 428 | Sibeswar Mukhopadhyay ... | 18-7 | Second |
| | 429 | Mahimaranjan Bandyopadhyay ... | 20 6 | Second |
| | *430 | Satinath Mallik (MLVm) .. | 19-9 | First |
| | 431 | Sachindrakumar Bhattacharyya ... | 16 4 | Second |
| | 432 | Sufi Yousuf Ali ... | 20-2 | Second |

| Roll. | No. | Name | Age. | Division in which the candidate has passed |
|---|---|---|---|---|
| | | **Dumkal H. E. School.** | | |
| Ber. | 434 | Sudhirkumar Pal .. | 18 1 | Second |
| | 435 | Prabhaskumar Sinha ... | 19-5 | First |
| | | **Nimtita G. D. Institution.** | | |
| | 439 | Moslem Hossain .. | 16-11 | First |
| | 440 | Md Abdur Rauf ... | 18 1 | First |
| | 441 | Mohammad Jamshed Ali (M) .. | 17 11 | First |
| | 442 | Md Mobarok Hossain | 17 6 | First |
| | 444 | Mahammed Hossain . | 17-11 | First |
| | 445 | Mahammad Ali Biswas | 19 4 | Second |
| | 446 | Durgaprasanna Gangopadhyay (Vml) .. | 18 8 | First |
| | 447 | Sudhendubhushan Gupta (Mm) . | 17 1 | First |
| | 448 | Anandagopal Chattoraj | 16 7 | First |
| | 449 | Jyotirbhushan Chaudhuri (MLm) .. | 17 | First |
| | 450 | Anantapada De (Mm) | 21 11 | First |
| | 451 | Baradacharan Pal .. | 16 10 | First |
| | 452 | Radhaballabh Hajra ... | 17-5 | Third |
| | 453 | Sanatkumar Gangopadhyay .. | 21-2 | Second |
| | 454 | Amiyakumar Chaudhuri . | 18 8 | Second |
| | 155 | Ajaykumar Sarkar . | 17 | Second |
| | 456 | Sarojaksha Majumdar | 19 3 | Second |
| | 157 | Nabendunath Majumdar (MLl) | 18 | First |
| | 458 | Satyacharan Saha | 21 4 | Second |
| | 460 | Chhedi Lall Misra (M) | 20 2 | First |
| | | **Sudhakarpur H. E. School.** | | |
| | 461 | Taradas Ray | 17-3 | First |
| | | **Kagram H. E. School.** | | |
| | 462 | Ganganarayan Ray (M Vm) ... | 20-2 | First |
| | 463 | Gopalchandra Sarkar (Mm) ... | 19 3 | First |
| | 464 | Ramprasad Pal (m) ... | 18-8 | First |
| | 465 | Abanikumar Mukhopadhyay (V) | 22-7 | First |
| | 466 | Satyakinkar Ghosh ... | 21-9 | Second |
| | 467 | Abdul Rowf ... | 17-10 | Second |
| | *469 | Khondekar Mahammod Hossain (MLm) ... | 16-11 | First |
| | | **Dhoradaha H. E. School.** | | |
| | 470 | Chittaranjan Saha ... | 17-6 | Second |
| | | **Amtala H. E. School.** | | |
| | 472 | Ganeschandra Panre (V) .. | 17 1 | First |
| | 473 | Nalinikanta Biswas ... | 20 2 | Second |
| | | **Nimtita G. D. Institution.** | | |
| | 475 | Bisweshwarprasad Sinha .. | 18-6 | Second |
| | | **Comilla Victoria Collegiate School.** | | |
| | 476 | Kedarnath Mallik ... | 21 11 | Third |
| | | **Private students.** | | |
| Ber. P. | 2 | Anilkumar Chattopadhyay ... | 17-9 | Second. |
| | 3 | Saktipada Chattopadhyay ... | 17-6 | Second |

| Roll. | No | Name. | Age | Division in which the candidate has passed |
|---|---|---|---|---|
| | | **Teachers.** | | |
| Ber. T. | 2 | Durgaprasad Bhattacharyya ... | 24 4 | First. |
| | 3 | Jatindranath Bhattacharyya ... | 23-5 | Passed. |
| | | **Sundala K. S. G. C. H. E. School.** | | |
| Birb. | 1 | Sudhirkumar Mukhopadhyay (M m) ... | 17-9 | First |
| | 2 | Parbaticharan Ray (m) | 16 5 | First |
| | 3 | Nityagopal Chattopadhyay ... | 18 7 | First. |
| | 4 | Anunabhushan Bandyopadhyay | 17-8 | First |
| | 5 | Sasankasekhar Mukhopadhyay ... | 19 | First. |
| | 6 | Nityanadhab Mukhopadhyay .. | 17 9 | Second |
| | 7 | Lambodar Mandal ... | 18-2 | First |
| | 8 | Krishnaburaj Goswami (M m) ... | 16-9 | First |
| | 9 | Badalchandra Pal ... | 18 | Second |
| | 10 | Harinarayan Bhattacharyya .. | 17 | First |
| | 12 | Manindrachandra Mukhopadhyay ... | 18 2 | Second |
| | 14 | Dhirendrachandra Mukhopadhyay . | 16 11 | Second |
| | | **Rampurhat H. E. School.** | | |
| | 15 | Byomkes Chattopadhyay ... | 16-9 | Second |
| | 16 | Sailajakanta Chattopadhyay ... | 17-8 | Third |
| | 17 | Durjendrakrishna Bandyopadhyay ... | 19-3 | Second |
| | 18 | Sachinandan Biswas ... | 18 8 | Second |
| | 19 | Bijaygopal Chandra | 19-1 | Second |
| | 21 | Anilkumar Bhattacharyya (M) ... | 16-11 | First |
| | 22 | Jibankrishna Chattopadhyay ... | 18 2 | First. |
| | 23 | Balaichandra Barat (M) | 18 6 | First |
| | 24 | Abanindranath Chattopadhyay (m) .. | 17-4 | First |
| | 26 | Abdul Iman .. | 19-2 | First |
| | | **Kirnahar S. C. H. E. School.** | | |
| | 27 | Bhupatibhushan Sinha (M m) ... | 17 | First |
| | 29 | Lakshminarayan Ray... | 18 9 | First |
| | 30 | Badyanath Pal (M) ... | 19 10 | First. |
| | 31 | Satyaniranjan Datta ... | 16-8 | First |
| | 32 | Bhupatibhushan Bhaumik ... | 20-9 | First |
| | 33 | Adyacharan Sen .. | 17 2 | First. |
| | 34 | Jagatchandra Sarkar .. | 16-11 | First |
| | 35 | Anadinath Sarkar ... | 19-3 | Second |
| | 36 | Haridas Ray ... | 22-3 | Third |
| | 37 | Charuchandra Mukhopadhyay ... | 17-9 | First |
| | 38 | Sarojaksha Ghosh ... | 20 8 | Second |
| | 39 | Jnanananda Das ... | 17-3 | First. |
| | | **Nakrakonda H. E. School.** | | |
| | 40 | Abhayacharan Bandyopadhyay ... | 18-7 | First. |
| | 41 | Jaminimohan Chakrabarti (M m) ... | 17-2 | First. |
| | 42 | Saktipada Chattopadhyay ... | 17 | First. |
| | 43 | Timirkanti Chandhuri | 17-8 | Second |
| | 44 | Balaicharan Das ... | 17-6 | First |
| | 45 | Sudhindrakumar Ghosh (M L m) ... | 16-9 | First |

| Roll. | No. | Name. | Age. | Division in which the candidate has passed |
|---|---|---|---|---|
| | | **Natrakonda H. E. School.** | | |
| Birb. | 46 | Suryyapada Gop ... | 19-6 | First |
| | 47 | Bhujangabhushan Mitra | 18 1 | Second. |
| | 48 | Tribhangamurari Pal (M) ... | 19-8 | First |
| | 49 | Lakshmipati Saha ... | 20-6 | Third |
| | 50 | Gopalchandra Ghosh ... | 17-6 | Third |
| | 51 | Arabindanath Ghosh ... | 17-1 | Second |
| | 52 | Basantakumar Mitra (M) ... | 16-6 | First |
| | 53 | Tarapada Nayak ... | 18 1 | First. |
| | 54 | Shaikh Mohibullah ... | 21-3 | Second. |
| | | **Birbhum Zila School.** | | |
| | 55 | Sripaticharan Sutradhar | 17-7 | First |
| | 56 | Niradbaran Sinha ... | 18-9 | First |
| | 57 | Narayanchandra Sen (M m) ... | 17-1 | First |
| | 58 | Abhayapada Sarkar (M m) ... | 19 2 | First |
| | 59 | Harigati Sadhu . | 17-5 | First. |
| | °60 | Haladhar Pal (ML m) .. | 17-3 | First |
| | 61 | Phanibhushan Mukhopadhyay (Mm) .. | 17-2 | First |
| | 62 | Sailajaprasad Mitra ... | 17-2 | First |
| | 63 | Anandagopal Mitra ... | 16-2 | First |
| | 64 | Mahadeb Kabiraj ... | 17-8 | Second |
| | 65 | Naharari Gum ... | 17-10 | First |
| | 66 | Dharandhar Ghosh (Mm) ... | 17 3 | First |
| | 68 | Chandrabhushan Datta (Mm) ... | 17 1 | First |
| | 69 | Lakshmanchandra De (Mm) ... | 17-2 | First |
| | 70 | Mrigankasekhar Chaudhuri ... | 18-7 | First |
| | °71 | Dwijendranarayan Chakrabarti (MLm) | 17 | First |
| | 72 | Manadaprasad Bhattacharyya (Mm) ... | 17 2 | First |
| | 73 | Kankaliprasad Bhattacharyya (Mm) ... | 16-2 | First |
| | 74 | Bandiram Bhattacharyya ... | 20 2 | Second |
| | 75 | Ramananda Mukhopadhyay ... | 17-11 | Second |
| | 76 | Kaliprasanna Mukhopadhyay ... | 23-9 | Second |
| | 77 | Dharandhar Mandal ... | 20-1 | First |
| | 78 | Kintiswar Ghosh (Mm) | 17-9 | First |
| | 79 | Bidyasaran Sinha ... | 18-1 | First |
| | 80 | Umapada Pattandi .. | 17 | Second |
| | 81 | Sripada Majumdar ... | 18 4 | First |
| | 82 | Sukumar Das ... | 18-3 | Second |
| | 83 | Kamalagati Pandyopadhyay .. | 17-6 | Second |
| | 84 | Abdul Bari ... | 16-3 | Second |
| | 85 | Subodhchandra Mitra .. | 16-3 | Third |
| | 86 | Mahamad Hasin ... | 19-2 | First. |
| | 87 | Molla Yakub Hossain... | 17 | First. |
| | 88 | Pershotam Lal Mehta (ml) ... | 16 | First |
| | | **Rampurhat H. E. School.** | | |
| | 89 | Shaikh Nur Mahammad | 21-8 | Second |
| | 91 | Shaikh Abdul Halim ... | 19-7 | First. |
| | 92 | Shambhunath Chattopadhyay ... | 19-4 | First |
| | 93 | Jitindramohan Das ... | 20-8 | Second |
| | 94 | Debendranarayan De ... | 17-11 | First |
| | 95 | Biyaygobinda Garai (M) ... | 22-2 | First. |
| | 96 | Kantichandra Ghoshal | 20 | Second |
| | | **Rampurhat H. E. School.** | | |
| Birb. | 97 | Bhujangaybhushan Mandal (m) ... | 19 | First |
| | 98 | Kalipada Mandal (m) .. | 20 1 | First |
| | 99 | Bholanath Majumdar (M) ... | 18 4 | First |
| | 100 | Ramranjan Mukhopadhyay (Mm) ... | 17-10 | First |
| | 101 | Baidyanath Ray ... | 17 7 | Second |
| | 102 | Bimalkrishna Sinha ... | 19 6 | Second |
| | 103 | Brajabihari Sinha (Mm) | 17 | First |
| | 104 | Girindranarayan Sinha | 21 | First |
| | 105 | Durgapada Mukhopadhyay ... | 17-3 | Second |
| | 107 | Saurindramohan Sinha | 16-1 | Third |
| | 108 | Umapada Chattopadhyay ... | 17 10 | First |
| | 110 | Pratulchandra Maitra... | 19 | Third |
| | 111 | Md Reza Hossain .. | 18-11 | Third |
| | 114 | Indugopal Majumdar .. | 17 6 | Second. |
| | 115 | Md Mozaher Hossain... | 17 2 | Third |
| | 116 | Bibhutibhushan Mukhopadhyay ... | 17-10 | First. |
| | 118 | Sakshigopal Mukhopadhyay ... | 16-9 | First |
| | 119 | Hitnarayan Pande ... | 21-2 | First |
| | 120 | Jharkandi Jha ... | 25-1 | First. |
| | 121 | Chakradhar Sahay (M) | 16-4 | First |
| | 122 | Balgobind Jha ... | 21-3 | First |
| | 123 | Manilal Jha ... | 22-9 | Second |
| | 124 | Chhotaylal Pande .. | 18-7 | Second. |
| | 125 | Brahmdeonaran Sinha | 19-2 | First |
| | 126 | Gulabchand Chaube (Ll) | 22 1 | First |
| | 127 | Gulabi Ram ... | 19-1 | Third |
| | 128 | Biswanath Sinha .. | 18 1 | Second. |
| | | **Bolpur H. E. School.** | | |
| | 129 | Manmathanath Biswas (M Lm) ... | 20 | First. |
| | 130 | Bibhutibhushan Mukhopadhyay (Mm) ... | 16-4 | First |
| | 132 | Bholanath Datta (Mm) | 16-1 | First |
| | 133 | Jnanendramohan Chaudhuri (Mm) ... | 16 10 | First |
| | 134 | Anukulchandra Ghose (M) ... | 16 11 | First |
| | 135 | Pasupati Ray (m) ... | 17 7 | First |
| | 136 | Umapada Mukhopadhay (Mm) ... | 16 | First |
| | 137 | Tarapada Chattopadhyay (m) ... | 17-9 | First |
| | 138 | Narendranath Dalal (Mm) .. | 18-6 | First |
| | 139 | Syamaprasanna Chaudhuri (Mm) ... | 16-1 | First |
| | 140 | Kshitischandra Sinha ... | 17-5 | First |
| | 141 | Satyakinkar Datta ... | 17-5 | First |
| | 142 | Bhairabnath De (M) ... | 18-1 | First. |
| | 143 | Sarojaksha Pain ... | 18 10 | Second |
| | 144 | Baidyanath Biswas ... | 17-3 | Second |
| | 145 | Danujakanta Mukhopadhyay ... | 16-4 | Second |
| | 146 | Durgaprasanna Ghoshhajra (m) ... | 18 | First |
| | 147 | Rampati Ghosh ... | 19 | Second |
| | 148 | Sripati Ghosh ... | 20-1 | Second |
| | 149 | Bisweswar Bhattacharyya ... | 19 4 | Second |
| | 150 | Byomkes Bhattacharyya ... | 21-2 | Second |
| | 151 | Subalsakha Sarkar (M) | 16-10 | First |
| | 152 | Dibakar Nayak ... | 18-10 | Second |
| | 153 | Umapada Sadhu ... | 17 5 | Second. |
| | 154 | Prabhasani Sen ... | 17-7 | Third |
| | 156 | Anadidas Chattopadhyay ... | 19 1 | Third |
| | 157 | Mogfur Hossain ... | 19-10 | First. |

| Roll. | No. | Name. | Age. | Division in which the candidate has passed |
|---|---|---|---|---|
| | | **Mitrabhum H. E. School.** | | |
| Birb. | 158 | Sudarsan Sinha (m) ... | 18 | First. |
| | 159 | Banyaeswar Sinha ... | 18 3 | Second |
| | 160 | Gurupada Narasundar (m) ... | 19-8 | First |
| | 161 | Haripada Mandal (Mm) | 17-11 | First. |
| | 162 | Gopeswar Mandal (m) | 22 | First |
| | 163 | Kalachand Mandal ... | 19 9 | Second |
| | 164 | Ramapati Bandyopadhyay ... | 18-6 | Second |
| | 165 | Gaurkinkar Chattopadhyay ... | 17 2 | First |
| | 166 | Sibsankar Chattopadhyay ... | 16-9 | First |
| | | **Nalhati H. P. H. E. School.** | | |
| | 168 | Gauriprasad Ray (ML Vm) ... | 17 4 | First |
| | 169 | Sudhirkumar Sinha ... | 19 | First. |
| | 170 | Basantakumar Ghosh ... | 23-2 | Second |
| | 171 | Satyabhushan Ghosh ... | 16-2 | Second |
| | 172 | Mrigankabhushan Sinha | 18-8 | Second |
| | 173 | Sripatinath Saha ... | 19-4 | First |
| | 174 | Dakshinaranjan Bandyopadhyay ... | 17 9 | First |
| | 175 | Bhupatibhushan Das ... | 19 | First |
| | 176 | Sasadhar Nath .. | 17-3 | Second |
| | 177 | Ramapati Mandal (M) | 17-6 | First |
| | 178 | Gaurisankar Chattopadhyay (m) ... | 19 6 | Second |
| | 179 | Balaram Datta (Mm) ... | 17-10 | First |
| | 180 | Kripasindhu Tewary ... | 16-6 | Second |
| | 181 | Bhabataran Chakrabarti ... | 17-7 | Third |
| | 183 | Saurendranath Ray .. | 16 3 | Second |
| | 185 | Kalikinkar Mukhopadhyay (M) ... | 18-1 | First |
| | 186 | Tarapada Sarkar .. | 19 | Second |
| | 187 | Kalibhushan Basu ... | 20-1 | Third |
| | 188 | Damodar Sinha ... | 19-1 | First |
| | 189 | Adyaprasad Sinha ... | 18-1 | Third |
| | 190 | Purnitnarayan Sinha (m) ... | 17-5 | First |
| | 191 | Jatindramohan Ghosh... | 18-5 | Second |
| | 192 | Kalandor Mondal ... | 19-2 | Second |
| | 193 | Shaikh Maliat Hossain | 19-7 | Second |
| | | **Labpur J. L. H. E. School.** | | |
| | 194 | Sheikh Siddique Hussain ... | 19 7 | Third |
| | 195 | Hansagopal Mukhopadhyay (M) ... | 19-9 | First |
| | 196 | Mohinimohan Mukhopadhyay (MLm) .. | 17 5 | First |
| | 197 | Jnanendranarayan Mitra (m) ... | 17-1 | First. |
| | 198 | Napharchandra Datta (M) ... | 17 | First |
| | 199 | Durgasankar Bandyopadhyay (mG) ... | 17-7 | First |
| | 200 | Gokulchandra Mandal (M) ... | 17 8 | First. |
| | 201 | Kumarischandra Pal ... | 17-6 | First |
| | 202 | Kshirodkumar Bandyopadhyay (m) ... | 18 8 | First |
| | 203 | Surendranath Mandal | 19-7 | First. |
| | 204 | Dharandhar Goraia ... | 19-5 | First. |
| | 205 | Saratchandra Chattopadhay ... | 18-9 | First |
| | 206 | Gauriprasanna Bandyopadhyay ... | 17-4 | First |
| | 207 | Guruprasanna Bandyopadhya ... | 18-10 | Second |
| | 208 | Dibischandra Ray ... | 21-1 | First |
| | 209 | Satyaprasanna Ghosh | 20 11 | Second |
| | 210 | Bholanath Chattopadhyay ... | 18-5 | Second. |
| | 211 | Prabhakar Majumdar... | 19-2 | Third |
| | 212 | Kalipada Mukhopadhyay ... | 19-11 | Second |
| | 213 | Anandachandra Mandal | 18-4 | Third. |
| | 214 | Dolgobinda Pal ... | 16 | First. |
| | 215 | Brahmapada Mukhopadhyay ... | 17-7 | First. |
| | 216 | Janardan Datta ... | 17-1 | Second. |
| | 217 | Biswanath Mukhopadhyay ... | 20-5 | Second |
| | | **Suri Benimadhab Institution.** | | |
| | 219 | Mahammad Ayub ... | 23-9 | First |
| | 220 | Fazlur Rahaman ... | 20 1 | Second |
| | 221 | Muhammed Hossen Khan ... | 17-1 | First |
| | 222 | Lala Prabaskumar ... | 18-1 | First |
| | 223 | Radhasyam Bandyopadhyay ... | 17-8 | First. |
| | 224 | Nityaranjan Das ... | 18-11 | Second |
| | 225 | Parbatisankar Sarkar ... | 16-8 | First |
| | 226 | Lala Sudhirkumar (Mm) | 16-10 | First |
| | 228 | Krishnagobinda Chaudhuri (M) ... | 17 1 | First |
| | 229 | Narendranath Ghosh ... | 22-8 | First |
| | 230 | Raghunath Mukhopadhyay ... | 17-2 | First |
| | 231 | Kalipada Bandyopadhyay ... | 20 2 | First |
| | 232 | Rajbihari Chattopadhyay (Mm) ... | 21-2 | First |
| | 233 | Dharandhar Chattopadhyay ... | 20-3 | Second |
| | 234 | Amarendranath Chattopadhyay ... | 16-1 | First |
| | 235 | Abdul Majid Chowdhury (m) ... | 23-5 | First |
| | 236 | Dharandhar Ray ... | 22 4 | Third |
| | 237 | Sudhansubhushan Adhikari ... | 21-7 | First |
| | 238 | Sailajakanta Mitra ... | 18-5 | Second |
| | 239 | Girijasankar Upadhyay | 18-11 | First. |
| | 241 | Jagamohan Nandi .. | 16-5 | Third |
| | 242 | Jagatbandhu Sadhu ... | 18-11 | Second |
| | 243 | Anathnath Sinha ... | 16 7 | Second |
| | 244 | Gurupada Mandal ... | 18-3 | First |
| | 246 | Sailajapada Majumdar | 20-1 | Second |
| | 247 | Radhaballab Karmakar | 16-2 | First |
| | 248 | Aghorchandra Datta ... | 18-2 | Second. |
| | 249 | Batuknath Bhattacharyya ... | 17-2 | Third |
| | 250 | Rasbihari Ghosh ... | 16-5 | First |
| | 251 | Panchkari Mukhopadhyay ... | 18 | Third. |
| | 252 | Dwijendrakumar Chattopadhyay ... | 19-1 | Second |
| | 253 | Bijaychandra Chattopadhyay ... | 19-7 | Second |
| | 254 | Debendranath Goswami | 19 | Second |
| | | **Hetampur Raj H.E. School.** | | |
| | 255 | Sheikh Abdul Rasid (M) | 18-2 | First. |
| | 256 | Atulchandra Sau (m) ... | 17 | First |
| | 257 | Rajendrakumar Sen (Lm) .. | 16 | First. |
| | 258 | Umapada Chaudhuri (MLm) ... | 16-1 | First |
| | 259 | Bholanath Datta (L) ... | 16-10 | First |
| | 260 | Gaurinath Chattopadhyay (M) ... | 16-8 | First |
| | 261 | Hemantakumar Mitra | 16-8 | Second. |
| | 262 | Kshudiram Datta ... | 16 | Second. |
| | 263 | Dwijapada Sarkhel ... | 18-3 | Second. |
| | 264 | Ramdas Nayak ... | 20-3 | Second. |
| | 265 | Durgagati Chattopadhyay ... | 17-3 | Second. |

| Roll. | No. | Name. | Age | Division in which the candidate has passed |
|---|---|---|---|---|
| | | **Hetampur Raj H. E. School.** | | |
| Birb. | 266 | Radhakinkar Bandyopadhyay ... | 19-8 | Second |
| | 267 | Gosaindas Chakrabarti | 17-2 | Second |
| | 268 | Kanailal Chattopadhyay ... | 20-2 | Second |
| | 269 | Madanmohan Ghosh ... | 17-11 | Second. |
| | 270 | Mrigendranath Chattopadhyay ... | 18 1 | Second |
| | | **Rampurhat Union H. E. School.** | | |
| | 273 | Saratchandra Bandyopadhyay ... | 19 | Second |
| | 274 | Rampada Mukhopadhyay ... | 17-9 | Second |
| | 275 | Sasankasekhar Chakrabarti ... | 18 11 | Second |
| | 276 | Kamalaprasanna Majumdar ... | 18 7 | Third |
| | 277 | Syamalchandra Dan ... | 18 | Second |
| | 280 | Syamalakanta Chattopadhyay ... | 18 11 | Third |
| | 281 | Bijaykumar Mukhopadhyay (Mm) ... | 17 8 | First |
| | 282 | Rameschandra Mitra (M) ... | 16-8 | First |
| | 283 | Kamalakanta Datta ... | 17 8 | First |
| | 284 | Karunasindhu Mukhopadhyay ... | 18-2 | Second |
| | 285 | Mrigendranath Ghosh | 16 3 | Second |
| | 286 | Gurupada Sinha . | 20 2 | Third |
| | 287 | Saktidhar Ray .. | 19-1 | Second |
| | 288 | Baidyanath Sinha ... | 16 7 | Second |
| | 289 | Umapada Bhattacharyya ... | 16-6 | Third |
| | 290 | Upananda Saha ... | 21-11 | Second |
| | 291 | Mahammad Ahasan .. | 19-11 | Second |
| | 292 | Sasadhar Pal ... | 21-5 | Third |
| | 293 | Jamshed Hossain ... | 18-3 | Second |
| | 294 | Bhupendranath Chakrabarti (M) .. | 18-6 | First |
| | 295 | Panchanan Seth ... | 18-11 | Third |
| | 296 | Binaykrishna Chakrabarti .. | 18 3 | Second |
| | 297 | Kumudbandhu Sahanay | 18 8 | Second |
| | 298 | Pramathanath Chattopadhyay ... | 16 1 | Second |
| | 299 | Basantakumar Bandopadhyay | 21 3 | Third |
| | 300 | Balaram Ray ... | 16-7 | Second |
| | 302 | Shaikh Ishaq Mollik ... | 22 | Third |
| | 303 | Abdul Wadud ... | 17-7 | Second |
| | 307 | Farrukh Hossain ... | 16-5 | Second |
| | 308 | Syed Md Akhtar Hasan ... | 18-1 | Third |
| | 309 | Abdul Jabber (MLm) | 16-1 | First. |
| | 310 | Mustafa Shaikh ... | 21-5 | First |
| | 311 | Mahammad Abdur Rouf | 17-3 | First |
| | 312 | Shaikh Obed Ali .. | 21-2 | Second |
| | 313 | Mohammod Somiruddin ... | 17 10 | First |
| | 314 | Mohammad Abdul Ali | 16-9 | First |
| | 315 | Ramajan Ali (m) ... | 19 2 | First |
| | 316 | Abdul Hamid Mollah | 17 | Second |
| | 318 | Abdul Gafur, II ... | 16-6 | First |
| | | **Bishnupur Rasamanjari H. E. School.** | | |
| | 319 | Mangobinda Sarkar (MLm) ... | 18-11 | First. |
| | 320 | Sudhansumohan Sarkar | 19-2 | Second |
| | 321 | Satyeschandra Sinha ... | 16-8 | First |
| | 322 | Dwijendranath Mandal | 19-3 | First |
| | 323 | Ramchandra Dalal ... | 18-4 | First |
| | 324 | Jatindramohan Biswas | 17-6 | Second. |
| | 325 | Nabagopal Mandal | 17-11 | Second |
| | 326 | Aswinikumar Raychaudhuri ... | 18-8 | First |

| Roll. | No. | Name | Age | Division in which the candidate has passed |
|---|---|---|---|---|
| | | **Bishnupur Rasamanjuri H. E. School.** | | |
| Birb. | 328 | Dhangopal Ghosh (M) | 21-5 | Second |
| | 329 | Bimalananda Raychaudhuri ... | 18-4 | Second |
| | 330 | Aswinikumar Biswas ... | 18-7 | First. |
| | 331 | Kapildeb Ray ... | 17-3 | First |
| | 332 | Hemantakumar Bandyopadhyay (M) ... | 16-1 | First |
| | 333 | Baidyanath Ray ... | 21-3 | Second |
| | 334 | Girijanath Bandyopadhyay .. | 16 1 | First |
| | 335 | Lakshmanchandra Bandyopadhyay ... | 19-8 | Second |
| | 336 | Bhudebchandra Ray ... | 19 2 | Second |
| | 337 | Bankimbihari Mukhopadhyay ... | 20-10 | Third |
| | 339 | Jatu Khan ... | 18 3 | Second |
| | 340 | Muhammad Hossain Nabi ... | 17-11 | Second |
| | 341 | Morshed Ali (m) ... | 19-11 | First |
| | 342 | Bhupatibhushan Ghosh | 22 1 | Third |
| | | **Rampurhat H. E. School.** | | |
| | 343 | Phakirchandra Mallik | 16 | Second |
| | | **Private Students.** | | |
| Birb. P. | | Samaresh Sinha ... | 16 9 | First |
| | | Samirchandra Majumdar (m) ... | 17-7 | First |
| | | Prakassasi Sen ... | 25 4 | First |
| | | Binaykrishna Ray ... | 19 8 | Second |
| | | Haraprasad Bhattacharyya . | 23-2 | First |
| | | Satischandra Bandyopadhyay ... | 20-5 | Second |
| | | Debendranarayan Das | 21 | Second |
| | | Sheikh Md Zohodor Rohim .. | 23-1 | Second |
| | | **Teachers.** | | |
| Birb. T. | 1 | Charuchandra Bhattacharyya .. | 30 3 | Passed |
| | | Nazir Ahmed ... | 24 5 | Passed. |
| | | **Bogra Zila School.** | | |
| Bog. | | Umaprasad Dasgupta (M) ... | 16-9 | First |
| | | Manoranjan Lahiri (ML Vm) ... | 16-1 | First |
| | | Jatindramohan Raychaudhuri (Mm) .. | 17-5 | First |
| | | Sudhirchandra Ghatak (m) ... | 16 1 | First |
| | | Bhabeschandra Chaudhuri (Mm) .. | 16-2 | First |
| | | Santoshkumar Ghosh (Mm) .. | 16 1 | First |
| | | Nirmalkumar Chaudhuri ... | 16 | Third |
| | 9 | Bijaykrishna Nayak ... | 16-4 | First. |
| | 11 | Kedarnath Chaudhuri | 16-3 | First |
| | 12 | Herambadas Bhattacharyya ... | 17-2 | First |
| | 13 | Haricharan Das ... | 16-9 | Third. |
| | 14 | Kalipada Sarkar ... | 19 | Second. |
| | 15 | Birendranath Joardar | 22-11 | Second. |
| | 17 | Pramathanath Datta .. | 17-7 | First |
| | 18 | Rabindrakumar Ghosh | 16-8 | First |
| | 20 | Sudhirkumar Haldar . . | 17-2 | First |
| | 21 | Promodaranjan Majumdar ... | 18-9 | First |
| | 22 | Jatindramohan Sanyal | 17-2 | First. |
| | 23 | Derasatulla Talukder .. | 21-8 | Second |
| | 24 | Mayeznddin Talukder (m) ... | 19 2 | Second |

| Roll | No. | Name | Age. | Division in which the candidate has passed. |
|---|---|---|---|---|
| | | **Bogra Zilla School.** | | |
| Bog. | 25 | Hossainali Khandocar | 17-2 | Second |
| | 26 | Md Abul Fazal Khan (LH) ... | 16 | First |
| | 27 | Md Serajul Hoque ... | 17 | First |
| | *28 | Mohammad Jasimud Din (MLVml) .. | 16-8 | First. |
| | 31 | Mosharatulla Pramanik (LH) ... | 16 | First |
| | 33 | Natibuddin Khondaker | 16-7 | First |
| | 34 | Abdul Wohab Ahamed | 18 9 | First |
| | 35 | Mayemuddin Pramanik | 19-9 | Third |
| | 36 | Hyderali Pramanik ... | 17-9 | First |
| | 37 | Md Enamal Bary ... | 19-11 | Second |
| | 38 | Baharuddin Talukdar | 17 2 | First. |
| | 39 | Umiruddin Mandal .. | 20 1 | Second |
| | 40 | Mohasenali Mian .. | 22-8 | Third |
| | 41 | Kabezuddin Fakir ... | 20 | Third |
| | 42 | Md Sufian Mia ... | 17 1 | First |
| | 43 | Hamuddin Khandoker | 22 7 | Second |
| | 44 | Syed Amsal Haque ... | 16 1 | First |
| | | **Pagali Karunakanta High School.** | | |
| | 45 | Paramanauada Das ... | 17 8 | First |
| | 47 | Radhanath Ray .. | 18-2 | Second |
| | 50 | Bhabanicharan Das ... | 18 4 | Second |
| | 52 | Kalitischandra Sarkar | 19 5 | Second |
| | 55 | Md Sukur Mahmud Mia (M) .. | 17-2 | First |
| | 56 | Fazlor Rahim Miah ... | 18-2 | Second |
| | 57 | Md Azazar Rohaman ... | 16 | Third |
| | 58 | Md Fazlor Rahman | 16-7 | First |
| | 59 | M D Johiruddin ... | 19-1 | Third |
| | | **Sonatala H. E. School.** | | |
| | 63 | Sureschandra Sinha ... | 17-2 | First |
| | 64 | Satischandra Maitra (Mm) ... | 17 10 | First |
| | 66 | Jogendrachandra Adhikari ... | 23-1 | Third |
| | 68 | Kamalakanta Mukhopadhyay ... | 17-2 | First |
| | 69 | Manomohan Ghosh (M) | 17 5 | Second |
| | 70 | Rajendranath Das ... | 21 7 | Third |
| | 72 | Md Abnu Golam Rasid | 16 11 | First. |
| | 74 | Md. Shamsher Rahaman ... | 16-4 | First |
| | 75 | Md Habibur Rahaman | 18 9 | Third |
| | 77 | Md Basiruddin Sorker | 18 7 | Third |
| | 78 | Md Tamizud Din ... | 18 1 | Second |
| | *79 | Tosaddak Hossain Miah (MLm) ... | 16 10 | First |
| | 80 | Tashimuddin Ahmed ... | 17-2 | Second |
| | 81 | Md Mamtaz Rahman Sarker (M) ... | 20-2 | First |
| | *82 | Md Abdul Gafur Pramanik (MLVm) ... | 20 8 | First |
| | 83 | Badiruddin Pramanik .. | 16 11 | First |
| | 84 | Kobed Hossain Mandol | 16-2 | First |
| | *85 | Ansaruddin Choudhury (MLm) ... | 16 5 | First |
| | | **Naogaon K. D. H. E. School.** | | |
| | *86 | Bhabanprasad Pham (MLm) .. | 17 2 | First |
| | 87 | Jatindranath Pramanik (M) | 17 2 | First |
| | 88 | Praphullachandra Kundu ... | 18-2 | First |
| | 89 | Praphullachandra Das (m) ... | 17-7 | First |
| | 90 | Subalchandra Mandal (m) ... | 17-7 | First |
| | 91 | Hamchandra Sarkar (Mm) | 18 | First |

| Roll | No. | Name. | Age. | Division in which the candidate has passed. |
|---|---|---|---|---|
| | | **Naogaon K. D. H. E. School.** | | |
| Bog. | 92 | Bhupendranath Saha ... | 21-4 | First |
| | 93 | Haripada Raykarmakar | 20-6 | Second |
| | 95 | Sudhindranath Mitra ... | 17-2 | First |
| | 96 | Jatischandra Das ... | 18 11 | First |
| | 97 | Ramanikanta Mandal ... | 19-8 | First. |
| | 98 | Birendrachandra Bakai | 18-8 | Third |
| | 99 | Sachindrakumar Chaudhuri (M ... | 16-5 | First |
| | 100 | Bandyanath Ray ... | 16 8 | First |
| | 101 | Nahimmadhab Chaki ... | 17-3 | Second |
| | 102 | Jogeschandra Saha ... | 18-2 | First |
| | 103 | Sudhirchandra Bal ... | 18-6 | First |
| | 104 | Birendrakrishna Ray (Mm) ... | 16-1 | First |
| | 105 | Jyotiswar Maitra ... | 16 2 | First |
| | 107 | Abu Hossain Mohammed Ashraful Islam | 16-3 | First |
| | 108 | Abul Khayer Mohammad Sekendarali ... | 16 1 | Second |
| | 110 | Md Miazan Ali ... | 16 2 | Second |
| | *111 | Abul Khayer Quaze Makimuddin Ahmed (MLm) ... | 17-11 | First |
| | 112 | Mohammad Shamsuddin ... | 16 2 | First |
| | 113 | Abdul Hamid Talukdar | 17-1 | Second |
| | 114 | Khondker Mohammad Serajul Islam (Lm) .. | 17 1 | First |
| | 115 | Shahuddin Ahamed .. | 16-3 | First |
| | 116 | Mohammad Mozharul Hoque ... | 17-3 | First |
| | 117 | Abu Abdul Mottalib Md Toffazal Hossain (Mm) ... | 16-8 | First |
| | 118 | Jahiruddin Mondal ... | 18 9 | First |
| | 119 | Jasimuddin Mondal ... | 17-2 | Second |
| | | **Bogra Coronation Institution.** | | |
| | 120 | Birendrakumar Acharyya ... | 17 2 | Second |
| | 121 | Momtazuddin Ahmed .. | 19-1 | First |
| | 122 | Timirchandra Sen ... | 18 7 | First |
| | 123 | Jagadindrakumar Bhattacharyya ... | 21-1 | First. |
| | 126 | Priyanath Khan .. | 18 | Second |
| | 127 | Prabhatchandra Sen .. | 16-3 | First |
| | 128 | Hemantalal Sarkar ... | 16 9 | Second. |
| | 129 | Satischandra Bhattacharyya ... | 16 10 | First |
| | 130 | Nasimuddin Sarkar ... | 17-2 | First. |
| | 132 | Satischandra Chaudhuri (M) ... | 17-4 | First. |
| | 133 | Jogeswar Chaudhuri ... | 19 4 | Second |
| | 134 | Jitendranath Kundu (m) ... | 18-10 | First |
| | 136 | Raghunandan Pathak | 17-6 | First. |
| | 137 | Md Mohsen Uddin ... | 17 | Second |
| | 138 | Md Mayen Uddin Miah | 19-4 | Second |
| | 139 | Md Abul Hosan (Mm) | 16-11 | First |
| | 140 | Ramzan Ali Khan ... | 20-2 | Third. |
| | 142 | Nizam Uddin Ahmed... | 18-5 | Third |
| | 143 | Syedkasi Mazzaman ... | 17-5 | Second |
| | 144 | Osman Ali Shah ... | 17-5 | Second. |
| | | **Talora Altafali H. E. School.** | | |
| | 146 | Surendranath Saha ... | 18-2 | First. |
| | 147 | Radhagopal Bhattacharyya ... | 19-5 | First |
| | 148 | Nanigopal Sinha ... | 18-8 | Second |
| | 149 | Jatindramohan Sarkar | 17-1 | Second |
| | 151 | Nalinimohan Pramanik | 20-7 | Third. |
| | 152 | Abdul Lateef Khan ... | 20-11 | First. |
| | 153 | Md Fayezuddin Dewan | 17-8 | First. |
| | 154 | Momtazali Khan ... | 19 3 | Third |
| | 157 | Md Bosiruddin Sarder | 19-8 | Second |
| | 158 | Sayed Tayef Ali ... | 18-7 | Second |
| | 159 | Moyezuddin Talukder | 21 1 | Second |

| Roll. | No. | Name | Age. | Division in which the candidate has passed. |
|---|---|---|---|---|
| | | **Khanjanpur H. E. School.** | | |
| Bog. | 162 | Surendranath Kundu... | 20-11 | Second. |
| | 163 | Satyendranath Mandal | 20-2 | Second |
| | 164 | Niradranjan Guha ... | 18 4 | First |
| | 165 | Nisakar Hui (M) ... | 17 10 | First. |
| | 167 | Sunilkumar Maitra ... | 17-10 | First |
| | 168 | Upendranath Sarkar ... | 19-4 | Second |
| | 170 | Abdul Aziz Mondal ... | 19-8 | Third |
| | 171 | Kefayetullah Khondaker ... | 19-8 | Second. |
| | 172 | Niamtulla Mondal ... | 18-8 | Second |
| | 173 | Mamiruddin Ahmed ... | 19-2 | Second |
| | 174 | Asiruddin Ahamed ... | 19-5 | Second |
| | 176 | Malekuddin Mondal ... | 19-10 | Second |
| | | **Sonamukhi H. E. School.** | | |
| | 178 | Sibendranath Mandal .. | 22 1 | First |
| | 180 | Binodlal Mukhopadhyay (L) ... | 16-2 | First |
| | *181 | Kazi Abdul Karim ... | 19 7 | First |
| | 182 | Mamiruddin Talukdar .. | 17-8 | First |
| | | **Chandaikona H. E. School.** | | |
| | 183 | Upendrachandra Adhikari ... | 21-5 | First |
| | 184 | Tarapada Basak ... | 16 | First. |
| | 185 | Brajabihari Das ... | 19-4 | Second |
| | 186 | Manomohan Datta ... | 21-5 | Second |
| | 187 | Nikhilbandhu Niyogi (m) . ... | 16 9 | Second |
| | 188 | Manindranath Bhadra | 17-2 | Third |
| | 189 | Amulyachandra Guhachaudhuri ... | 18 | First |
| | 190 | Bandyanath Bhaumik... | 24-2 | Second |
| | 192 | Azizur Rahaman Sarkar | 21-6 | Second |
| | | **Kalai High School.** | | |
| | 193 | Sudhondumadhab Deb | 17-3 | Second |
| | 194 | Bhaboschandra Sanyal | 17-5 | Second |
| | °196 | Quazi Mokhleswar Rahaman (M L V II) | 17 | First |
| | 197 | Jamiruddin Pramanik | 17-1 | First |
| | | **Madia V. C. H. E. School.** | | |
| | 201 | Jyotirischandra Chakrabarti (Mm) ... | 18 5 | First |
| | 202 | Priyagobinda Sinha ... | 16 1 | First |
| | 204 | Amiyanath Khan ... | 21 9 | Third. |
| | 205 | Sudhansulal Deb .. | 18-2 | Second |
| | 206 | Amalkumar Chaudhuri | 19-2 | Second |
| | | **Balihar Saradindu H. E. School.** | | |
| | 208 | Harilal Pramanik ... | 18-1 | First |
| | 210 | Pramathanath Saha .. | 18-2 | Second |
| | 213 | Manindrakisor Nanyashi | 18 5 | Third |
| | 214 | Kalipada Bhattacharyya (M) | 17-3 | First. |
| | 215 | Jogeschandra Bandyopadhyay ... | 18-5 | Second |
| | 216 | Ahmed Ali Pramanik .. | 19-2 | Third |
| | 217 | Habiluddin Mridha ... | 22-11 | Second |
| | | **Kagali K. K. H. E. School.** | | |
| | 218 | Ramanikanta Baishnab | 18 | Second |
| | | **Sukanpukur H. E. School.** | | |
| | 219 | Konaram Pramanik (MLm) ... | 16-2 | First |
| | 220 | Sridhar Nath ... | 16-2 | Second |
| | 221 | Abhayapada Ray (MVm) ... | 16-4 | First |
| | 222 | Jogendranath Sarkar... | 16-4 | Second |
| | 223 | Surendranath Ghosh ... | 19-11 | Second |
| | 224 | Md. Bodiozzaman ... | 16-1 | Third |
| | 226 | Alimuddin Ahmed ... | 21-6 | Third |
| | 227 | Md. Bazlar Rahman ... | 18 | Third |

| Roll | No. | Name. | Age. | Division in which the candidate has passed. |
|---|---|---|---|---|
| | | **Adamdighi I. P. J. High School.** | | |
| Bog. | 229 | Anantabihari Kundu ... | 20-2 | Second |
| | 230 | Debendranath Kundu ... | 17 | Third. |
| | 231 | Hemantanath Chaudhuri ... | 18-10 | First |
| | 233 | Rafatulla Mandal ... | 19-2 | Third |
| | 234 | Mahiruddin Ahmed ... | 23-1 | Second. |
| | 235 | Saifuddin Pramanik ... | 18-1 | First |
| | 236 | Fasiruddin Sarder ... | 18 | First |
| | 237 | Basiruddin Pramanik ... | 21-11 | First |
| | 238 | Kaderali Mondal ... | 18-1 | First |
| | 240 | Hajemali Fakir ... | 19 2 | Second |
| | | **Sharlakandi H. E. School.** | | |
| | 241 | Srimanta Das ... | 18 | First |
| | 244 | Mohammed Sayedali Mia ... ... | 17-5 | Second |
| | 245 | Mohammed Amir Hossain ... | 20-1 | Third |
| | 246 | Bakhatulla Ahamed . | 19 1 | Second |
| | 249 | Mahammad Naya Miah | 16-9 | Third |
| | 250 | Hazrat Ali Miah ... | 17-1 | First |
| | 251 | Muhammed Jobed Ali Miah ... ... | 17-1 | Second. |
| | 252 | Muhammad Tahasiruddin Miah ... | 17-3 | Second |
| | | **Sherpur D. J. H. E. School.** | | |
| | 253 | Kuranchandra Barman | 18-8 | Second. |
| | 254 | Asutosh Bhattacharyya ... | 18-8 | Second |
| | 255 | Gaurgopal Datta .. | 18-5 | Second |
| | °256 | Nirmalchandra Kundu (MVm) ... | 18 5 | First |
| | 257 | Manindralal Lahiri (L) | 18 11 | First. |
| | °258 | Satischandra Sarkar (LVm) ... | 19-10 | First |
| | 259 | Mrinalranjan Sengupta | 20-4 | Third |
| | 260 | Sukumar Basu ... | 22 | First. |
| | 261 | Dhirendranath Lahiri | 19-1 | First. |
| | 262 | Sadhirchandra Saha ... | 17 | First |
| | 263 | Subodhchandra Sanyal | 17-1 | Second |
| | | **Gosainbari A. V. H. E. School.** | | |
| | 266 | Ramchandra Ray .. | 19 3 | Second |
| | 269 | Md. Jasimuddin Sirkar | 17 2 | Second |
| | | **Jessor Zila School.** | | |
| | 273 | Jyotischandra Dasgupta | 16 2 | Third. |
| | | **Kalai H. E. School.** | | |
| | 274 | Phayez Uddin Mian ... | 18-3 | Second |
| | | **Private Student.** | | |
| Bog. P. | 1 | Bijaysundar Chakrabarti | 20-4 | First |
| | | **Teacher.** | | |
| Bog. T. | 1 | Shafiuddin Ahamed, I | 19-4 | Second |
| | | **Sarail Annada H. E. School.** | | |
| Brahm. | 1 | Lalitmohan Bhattacharyya ... | 17-1 | First |
| | 2 | Mahendrachandra Chakbarti (Mm) ... | 17-7 | First. |
| | 3 | Kaliprasanna Datta (m) | 16-1 | First |
| | °4 | Saileschandra Datta (MLVm) ... | 17 | First |
| | 5 | Sachindranarayan Das (Mm) ... | 17-3 | First. |
| | 6 | Rasikchandra Deb (m) | 20 | First |
| | 7 | Majedul Hoque (Mm) | 17-1 | First. |
| | 8 | Krishnadas Nandi (M) | 16-1 | First. |

| Roll. | No. | Name. | Age | Division in which the candidate has passed. |
|---|---|---|---|---|
| | | **Sarali Annada H. E. School.** | | |
| Brahm. | *9 | Phanindranath Ray (m) ... | 17 4 | First |
| | 10 | Nanigopal Sen (MVm) | 16-8 | First |
| | 11 | Prabodhchandra Talapatra ... | 16-8 | Second |
| | *12 | Mahammed Bepari (MLm) ... | 17-4 | First |
| | 13 | Niradkumar Bhattacharyya ... | 16-4 | Second |
| | 14 | Nahinmohan Bhattacharyya ... | 18-1 | First. |
| | 15 | Nanigopal Chakrabarti | 16 11 | First |
| | 16 | Saratchandra Karmakar | 20-4 | Second |
| | 17 | Satyanath Bhattacharyya ... | 16-11 | Second |
| | 18 | Prabhatchandra Das .. | 18-10 | Second |
| | 19 | Bipinchandra Karmakar ... | 18-1 | Second |
| | 20 | Misbahul Islam ... | 20-7 | First |
| | 21 | Abdul Hakim ... | 21 3 | Second |
| | *22 | Abdul Mannan (MLml) | 16-3 | First |
| | | **Fatehpur K. G. High School.** | | |
| | 23 | Akshyakumar Bhattacharyya (m) ... | 17-4 | First. |
| | 26 | Ambikacharan Ray .. | 19 4 | First. |
| | 27 | Sachindrakumar Sinha | 16-4 | Second |
| | 28 | Narendranath Dasgupta | 21-1 | Second |
| | 29 | Muhammed Jonab Ali | 20-2 | Second |
| | 32 | Jamal Abdin . | 17 3 | First |
| | 33 | Mazuzel Islam .. | 18-3 | Third |
| | 35 | Md Ali Hussain Miah | 22 9 | Third. |
| | 37 | Muhammed Was Ali ... | 16-6 | First |
| | 39 | Tabdil Hussain ... | 17-1 | First |
| | | **Bitgarh Radhanath H. E. School.** | | |
| | 40 | Sachindrachandra Ghosh (m) ... | 17-1 | First |
| | 42 | Bhupeschandra Bardhan | 16-9 | First |
| | 46 | Kafiluddin Ahammad ... | 20 5 | Second |
| | 47 | Md Abdul Bari ... | 18-10 | Second |
| | 48 | Mahammad Abid Ali Bhuian ... | 19-6 | Second |
| | 49 | Abdul Hekim ... | 18 | Third. |
| | | **Sarali Annada H. E. School.** | | |
| | 51 | Subodhchandra Bhattacharyya | 18-10 | First |
| | 52 | Dharanidhar Chaudhuri | 18 3 | Second. |
| | 53 | Haripada Bhattacharyya .. | 19-7 | Second |
| | 54 | Md. Taher Thakur ... | 16-8 | Third |
| | 55 | Meer Mahbub Ali ... | 16-2 | First |
| | | **Brahmanbaria Annada High School.** | | |
| | 56 | Pramodranjan Nandi .. | 18-11 | Second |
| | 57 | Binodbihari Deb ... | 18-2 | Second |
| | | **Gokarna Syed Wali Ulla High School.** | | |
| | 59 | Anadikumar Bhadra ... | 18-7 | First |
| | 60 | Mohinimohan Deb ... | 17-3 | First |
| | 61 | Harendrakumar Bhattacharyya ... | 18-1 | Second. |
| | 62 | Harimohan De ... | 17-1 | First |
| | 63 | Jnanendranath Das ... | 17-8 | Second |
| | 66 | Harischandra Bhattacharyya ... | 20-2 | Third |
| | 67 | Asutosh Deb ... | 19-1 | Second |
| | 69 | Rajyeswar Deb ... | 17 7 | Second. |
| | 73 | Lalitmohan Deb ... | 18-1 | Second |
| | 74 | Chintaharan Biswas .. | 16-3 | Third |

| Roll. | No. | Name. | Age. | Division in which the candidate has passed. |
|---|---|---|---|---|
| | | **Brahmanbaria Annada H. E. School.** | | |
| Brahm. | 76 | Jagadischandra Das ... | 16-11 | Second |
| | 77 | Jogendranath Ray (M) | 18-2 | First |
| | 78 | Manoranjan Das ... | 17-1 | First. |
| | 80 | Jogeschandra Das ... | 17-10 | Second |
| | 81 | Haribhakta Kundu (Mm) ... | 18 | First |
| | 82 | Abanimohan Guha ... | 18-4 | Second |
| | 83 | Harendramohan Kar ... | 18-3 | First. |
| | 84 | Praphullachandra Chakrabarti ... | 18-9 | First |
| | 85 | Manindrachandra Chakrabarti ... | 17-9 | First |
| | 87 | Rukminimohan Chaudhuri ... | 19-1 | Second |
| | 91 | Bidhubhushan Nandi... | 16-5 | Second |
| | *92 | Phanibhushan Chakrabarti (MLml) ... | 16 1 | First |
| | 93 | Nibaranchandra Chaudhuri ... | 18-8 | First |
| | 95 | Paresranjan Nandi (MVm) ... | 16-1 | First |
| | 97 | Durgeschandra Ray ... | 16 2 | First |
| | 98 | Aswinikumar Das (M) | 18 6 | First |
| | 99 | Bhupendrachandra Bhattacharyya (M)... | 17-6 | First. |
| | 100 | Amarchandra Pal ... | 16 8 | Second |
| | 101 | Upendrachandra Ray ... | 16-3 | Second |
| | *102 | Ramoschandra Ray (M L m) ... | 17 10 | First |
| | 103 | Bankimchandra Bhattacharyya ... | 22-1 | Second |
| | 105 | Hirendrachandra Bhattacharyya ... | 21-4 | First |
| | 106 | Gaurchand Das ... | 19-9 | Second |
| | 107 | Subodhchandra Bardhan ... | 19 1 | Third |
| | 108 | Narendramohan Datta | 17-3 | First |
| | 109 | Jatindrachandra Deb ... | 16 | Second |
| | 110 | Bankimchandra Mandal | 20-1 | First |
| | 111 | Suryyakumar Chakrabarti ... | 20-1 | Second |
| | 112 | Sasankasekhar Dasgupta ... | 17 | Second |
| | 113 | Atulchandra Sarkar ... | 21-3 | Second |
| | 116 | Gopalchandra Biswas . | 19 1 | First. |
| | 118 | Abdul Hamid Bhuya ... | 19 3 | Second |
| | 119 | Rupa Mia ... | 20-6 | First. |
| | 120 | Mahbubul Bari, I ... | 16 6 | First |
| | 122 | Mahbubul Bari, II ... | 16 | First |
| | 124 | Julfukar Ali Bhoan ... | 22-7 | Second |
| | | **Brahmanbaria George H. E. School.** | | |
| | 126 | Ambikacharan Saha ... | 18 10 | First |
| | 127 | Akshaykumar Gupta ... | 16-11 | First |
| | 128 | Binodbihari Saha ... | 22-2 | Second |
| | 130 | Hemchandra Kar ... | 16-2 | First |
| | 131 | Bipinchandra Ray ... | 18-3 | First |
| | 132 | Haripada Chakrabarti... | 16-7 | Third |
| | 134 | Abu Reza Mohammed Badsha ... | 17 2 | Second |
| | 135 | Syed Mohiuddin ... | 16-7 | Third. |
| | 136 | Muhammad Ibrahim ... | 18-1 | First. |
| | 137 | Abdul Hai (L) ... | 17-8 | First. |
| | 139 | Abdul Latiff Bhuia ... | 22-11 | Second |
| | 140 | Hafizuddin Ahammed | 18-4 | First. |
| | 141 | Fazlur Rohomon ... | 22-10 | Second |
| | 144 | Ausiruddin Ahamed ... | 17-2 | First. |
| | 145 | Abdul Aziz Mia ... | 19-11 | Second |
| | 147 | Syed Mahboboor Rahman ... | 18-1 | Second |
| | 148 | Abdur Rahaman Khan | 16-1 | Second |
| | 149 | Abdul Halim Chowdhury | 18-11 | Second |
| | 150 | Wahiuddin ... | 20-11 | Second |

| Roll. | No. | Name. | Age. | Division in which the candidate has passed. |
|---|---|---|---|---|
| | | **Brahmanbaria Annada H. E. School.** | | |
| Brahm. | 152 | Sitanath Bhattacharyya | 19-9 | Second. |
| | 154 | Nagendranath Ray ... | 19-9 | Second |
| | 155 | Baikunthachandra Mandal ... | 17 | Second |
| | 156 | Dineschandra Nandi ... | 19-4 | First |
| | 157 | Nripendrachandra Majumdar ... | 20-1 | Second |
| | 158 | Amulyakumar Deb ... | 17-2 | Third |
| | 159 | Mukulbihari Deb ... | 17-2 | Second. |
| | 160 | Gopimohan Das .. | 18-9 | First |
| | 161 | Binodbihari Chaudhuri ... | 18-3 | First |
| | 163 | Sailendrachandra Bhattacharyya ... | 16-2 | First |
| | 164 | Surendrachandra De ... | 18-2 | Third |
| | 165 | Sureswar Datta ... | 16-4 | Second |
| | 166 | Tikendrachandra Biswas ... | 18 1 | Second |
| | 168 | Abdul Halim (M) ... | 17-1 | First |
| | 169 | Abdul Kader .. | 16-9 | First |
| | 170 | Abdus Salam Khan ... | 16-11 | Second |
| | 171 | Hemendralal Das ... | 22 11 | Third |
| | 172 | Lalmohan Bhattacharyya . | 17 | Second |
| | 173 | Kshetramohan Nag .. | 19 1 | First |
| | 174 | Rajendrachandra Pal ... | 21-1 | Second |
| | 175 | Jogeschandra Pal ... | 18 2 | Second |
| | 176 | Anandamohan Karmakar ... | 19-9 | Second |
| | | **Rupasdi Brindaban H. E. School.** | | |
| | 178 | Kailaschandra Saha ... | 16-6 | First |
| | 179 | Upendrachandra Ghosh | 17-10 | Second |
| | 180 | Aswinikumar Debnath | 16 3 | First |
| | 181 | Harimohan Debnath (V) ... | 16-2 | First |
| | 182 | Sadat Ali .. | 22-4 | Third |
| | 183 | Abdul Hamid ... | 16-4 | First |
| | 184 | Abdul Goffur .. | 16 10 | First |
| | 185 | Md Matbar Ali ... | 16 1 | Second |
| | | **Brahmanbaria Edward Institution.** | | |
| | 189 | Birendrachandra Bhattacharyya ... | 17 7 | Second |
| | 190 | Kamakhyacharan Bhattacharyya ... | 16 8 | First |
| | 192 | Sureshbandhu Bhattacharyya .. | 19 | First |
| | 193 | Jogendrachandra Das ... | 16-11 | First |
| | 195 | Abanimohan Deb ... | 19 11 | Second |
| | 199 | Samarendrachandra Haldar (m) ... | 19 1 | First |
| | 200 | Rebatimohan Kar ... | 20-2 | Second |
| | 201 | Manoranjan Mukhopadhyay (m) ... | 17-6 | First |
| | 202 | Akshaymohan Nag (MVinl) .. | 17-10 | First |
| | 203 | Rajmohan Pal ... | 20-2 | Third |
| | 204 | Rebatimohan Pal ... | 18 2 | Second |
| | 205 | Sudhirchandra Pal ... | 17-3 | First |
| | 206 | Sudhirkumar Pal ... | 16-1 | Second |
| | 207 | Surendrachandra Pal ... | 17-6 | First |
| | 208 | Pradyotkumar Ray (V) | 17 6 | Second |
| | 209 | Rameschandra Ray ... | 17-7 | First |
| | 212 | Gobindachandra Saha ... | 17-5 | Second |
| | | **Rupasdi Brindaban H. E. School.** | | |
| | 216 | Azharul Hoque ... ... | | Second |
| | | **Brahmanbaria George H. E. School.** | | |
| | 218 | Surendrachandra Ray | 17-3 | Second |

| Roll. | No. | Name. | Age. | Division in which the candidate ha |
|---|---|---|---|---|
| | | **Salimganj H. E. School.** | | |
| Brahm. | 223 | Khandker Motur Rahaman ... | 21-8 | Second |
| | 226 | Muhammed Abdul Wahed ... | 23-11 | Second |
| | 227 | Fazlul Haque ... | 22 3 | Second |
| | 229 | Muazzul Islam, I ... | 19-2 | Third |
| | 230 | Muhammad Tazul Islam ... | 19 4 | Second |
| | 231 | Abdulla ... | 18-4 | First. |
| | 232 | A S. Muhammad Nurulla ... | 20-4 | Second. |
| | 233 | Kazi Abdul Hamid (M) | 17 2 | First |
| | 234 | Mamtazuddin Ahmad ... | 20-2 | Second |
| | 235 | Abdul Wadud Bhuia (M) ... | 18-1 | First |
| | 237 | Julfukar Ali ... | 19 1 | Second |
| | 238 | Md Eakub Ali .. | 17-1 | Second |
| | 239 | Abdul Malaque .. | 18-1 | Second |
| | 240 | Asgar Ali ... | 18 | Third |
| | 241 | Mahuddin Khan ... | 22 | Third |
| | 242 | Mahammed Nurul Haque ... | 19 2 | Second |
| | 245 | Abdur Rohman ... | 18 7 | Second |
| | 248 | Nabadwipchandra Das | 16 2 | First |
| | 249 | Jogendranath De ... | 19 1 | Second |
| | | **Mathrun N. C. Institution.** | | |
| Bur. | 1 | Sibadas Sarkar (Mm) ... | 17 4 | First |
| | 2 | Narendrakrishna Gupta (Mm) .. | 16 10 | First. |
| | 3 | Kangalhari Chattopadhyay (Mm) .. | 19-11 | First |
| | 4 | Ganeschandra Mandal | 18-3 | First |
| | 5 | Amin Ahammed ... | 20 3 | First |
| | 6 | Jagannath Kundu ... | 18-5 | First |
| | 7 | Gopalkrishna Gupta ... | 16 1 | First |
| | 8 | Nirmalchandra Chaudhuri ... | 17-2 | First |
| | 9 | Gurutaran Fauzdar ... | 18-2 | First. |
| | 10 | Gopipada Nandi (M) .. | 18-4 | First |
| | | **Bhaita H. E. School.** | | |
| | 11 | Patitpaban Chattopadhyay (m) ... | 17-1 | First |
| | 12 | Sasadhar Gupta ... | 18 1 | First |
| | 13 | Ramranjan Ray ... | 18-3 | Second |
| | 14 | Pasupati Sarkar (Mm) | 18-6 | First |
| | 15 | Anathnath Dasghosh... | 18-1 | Second |
| | 16 | Syamakinkar Datta .. | 18-5 | Second |
| | | **Mathrun N. C. Institution.** | | |
| | 17 | Kazikader Nowaz ... | 16 8 | First |
| | | **Burdwan Raj Collegiate School.** | | |
| | 18 | Bholanath Khanna ... | 18-3 | Second |
| | 19 | Ranajitkumar Sen (M) | 16-11 | First |
| | 20 | Amalaprasad Aich ... | 16 | Second |
| | 21 | Haridhan Bandyopadhyay (m) ... | 18-11 | First |
| | 22 | Bibhutibhushan Bandyopadhyay ... | 16-4 | First |
| | 23 | Haragobinda Ghosh (m) | 17 11 | First |
| | 24 | Bibhutibhushan Bhattacharyya (m) .. | 18-8 | First. |
| | 25 | Mihirkumar Ghosh ... | 18-8 | Second |
| | 26 | Adityakumar Das ... | 17-5 | Second |

| | No. | Name. | Age. | Division in which the candidate has passed |
|---|---|---|---|---|
| | | **Burdwan Raj Collegiate School.** | | |
| Bur. | 27 | Sisirkumar Sinha ... | 16-2 | First |
| | 28 | Praphullaprakas Nandi | 18-3 | First |
| | 29 | Gobindaprasad Konar | 17-3 | First |
| | 30 | Ramgati Chakrabarti (Mm) .. | 16-10 | First |
| | 32 | Gopeschandra Chattopadhyay (MLm) ... | 16 | First |
| | 33 | Manilal Das (M) ... | 18-7 | First |
| | 35 | Bijaykrishna Gangopadhyay ... | 18-1 | Second |
| | 37 | Chandicharan Mukhopadhyay (Mm) ... | 16-5 | First |
| | 38 | Radhagobinda Mitra ... | 19-10 | Second |
| | 39 | Nareschandra Misra ... | 16 8 | Second |
| | 40 | Sitapati Sanyal ... | 21-4 | First. |
| | 41 | Ramendranath Chaudhuri ... | 16-4 | First |
| | 42 | Rampada Ray ... | 16-3 | First |
| | *43 | Satyendranath Ghoshal (MLml) ... | 16 5 | First |
| | *44 | Sadhankumar Chattopadhyay (MLml) ... | 16-6 | First |
| | 45 | Dineschandra Bandyopadhyay ... | 16 1 | Second |
| | 46 | Amares Bandyopadhyay | 16-3 | First |
| | 47 | Hariprasad Bowra ... | 17-9 | Second |
| | 48 | Debprasad Chattopadhyay ... | 16-9 | Second |
| | 49 | Hambus Sobhan ... | 18 | Second |
| | | **Burdwan Municipal School.** | | |
| | 50 | Sanatkumar Aditya (M) | 16-3 | First |
| | *51 | Pramathanath Baksi (MLml) ... | 17 7 | First |
| | 52 | Binaykrishna Bandyopadhyay ... | 18-9 | First |
| | 53 | Pramathabhushan Bandyopadhyay (Mm) | 17 1 | First. |
| | 54 | Bijaykrishna Basu (Mm) ... | 17 7 | First |
| | *55 | Phanibhushan Biswas (MLm) ... | 17 | First |
| | 56 | Sarasimohan Bhattacharyya (m) ... | 17-1 | First |
| | 57 | Nabakumar Chakrabarti (m) ... | 17-8 | First |
| | 58 | Nanigopal Chakrabarti (m) ... | 18-3 | First |
| | 59 | Amarendranath Chattapadhyay (Mm) ... | 16-5 | First |
| | 60 | Sambhunath Chattopadhyay ... | 17-3 | First. |
| | 61 | Kisorimohan Chaudhuri (MLm) ... | 17-3 | First |
| | 62 | Purnachandra Chaudhuri (Mm) ... | 17-1 | First |
| | 63 | Shashtidas Chaudhuri (Mm) .. | 17-5 | First. |
| | 64 | Upendranath Chaudhuri (Mm) ... | 17-1 | First |
| | 65 | Nabagopal Das (Mm) .. | 17-4 | First |
| | 66 | Gopalchandra Dasgupta (Mm) ... | 17-2 | First |
| | 67 | Jyotischandra De ... | 16-8 | Second |
| | 68 | Chandicharan Datta (m) | 17-8 | First |
| | 69 | Bishnupada Ghosh (M) | 17-9 | First |
| | 70 | Nisakar Ghosh (Mm) ... | 17-4 | First. |
| | 71 | Pranballabh Ghosh ... | 18-2 | Second |
| | *72 | Sibapada Ghosh (MVm) | 17-6 | First. |
| | 73 | Harihar Mandal ... | 18-3 | First |
| | 74 | Nitaidas Mukhopadhyay ... | 17-1 | Second |
| | 75 | Tulasidas Mukhopadhyay (Mm) ... | 17-2 | First |

| Roll. | No | Name | Age. | Division in which the candidate has passed. |
|---|---|---|---|---|
| | | **Burdwan Municipal School.** | | |
| Bur. | 76 | Bholanath Pal (Mm) ... | 19 | First. |
| | 77 | Manindranath Pal ... | 23-10 | Second |
| | 78 | Praphullakumar Pal (m) | 16 1 | First. |
| | 79 | Sajanikanta Raja (Mm) | 16-1 | First. |
| | 80 | Gobindachandra Ray (Mm) ... | 17-3 | First. |
| | *81 | Pasupati Ray (Mm) ... | 17 | First. |
| | 82 | Ramlochan Ray ... | 16-1 | Second |
| | 83 | Radharanjan Ray (Mm) | 16-3 | First |
| | 84 | Amritalal Sinha ... | 18-6 | First |
| | 85 | Matiur Rahman (m) ... | 19 11 | Second |
| | 86 | Nirapada Bhattacharyya ... | 17-2 | First |
| | 87 | Kamalakinkar Chattopadhyay (m) ... | 19-1 | First |
| | 88 | Nirmalprasad Datta ... | 18-4 | First |
| | 89 | Sudhansubhushan Datta (m) ... | 19 5 | First |
| | 90 | Amalchandra Bandyopadhyay (II) ... | 16-7 | First |
| | *91 | Atulyadhan Bandyopadhyay (LIH) ... | 16-7 | First |
| | 92 | Kamalaksha Bandyopadhyay ... | 18 8 | Second |
| | 93 | Sarasimohon Bandyopadhyay ... | 16-7 | First |
| | 94 | Bhagabatiprasad Bhattacharyya (M) ... | 18-9 | First |
| | 96 | Bhupendranath Chattopadhyay ... | 18-10 | First. |
| | 97 | Manohar Chattopadhyay ... | 16 | Second. |
| | 98 | Manoranjan Chattopadhyay ... | 17-1 | Second |
| | 99 | Anantamohan Raychaudhuri ... | 18 3 | First |
| | 100 | Amarendranath Mukhopadhyay (II) ... | 17-2 | First |
| | 101 | Bishnupada Mukhopadhyay ... | 19-6 | Second |
| | 102 | Narayandas Mukhopadhyay ... | 17 | First |
| | 103 | Kanaikrishna Samanta (M) ... | 16-1 | First |
| | 105 | Nakullal Ghosh ... | 18-8 | Second |
| | 106 | Jasodanandan Ghosh ... | 19-5 | Second |
| | *107 | Shaikh Abdur Rahman (MLml) ... | 16 6 | First |
| | 108 | Abul Hashem (Mm) ... | 17-1 | First |
| | 109 | Chowdhury Abdus Salam (m) ... | 17-11 | First |
| | 110 | Shaikh Kabir Ahamed Layek ... | 16 7 | First |
| | 111 | Syed Mohammud Abdullah ... | 18-2 | First. |
| | 112 | Muhmad Habibar Rahman (Mm) ... | 20-4 | First |
| | 113 | Nurul Islam ... | 18-8 | Second. |
| | 114 | Syed Ali Hossain ... | 17-4 | Second. |
| | 115 | Azizul Bari ... | 18-3 | Second. |
| | | **Katwa K. D. Institution.** | | |
| | 116 | Sibakinkar Chakrabarti (M) ... | 16-11 | First |
| | 117 | Sarajukumar Chaudhuri (Mm) ... | 18-5 | First. |
| | 118 | Sukumarkrishna Las (M) ... | 17-2 | First. |
| | 119 | Arunoday Ghosh (M) ... | 16 8 | First. |
| | 120 | Rasbihari Ghosh (Mm) | 16-8 | First. |
| | 121 | Kasiprasad Aich ... | 16-3 | First. |
| | 122 | Sachindranath Bandyopadhyay ... | 16-5 | First. |
| | 123 | Sailendranath Chattopadhyay ... | 18-1 | First. |

| Roll. | No. | Name. | Age. | Division in which the candidate has passed. |
|---|---|---|---|---|
| | | **Katwa K. D. Institution.** | | |
| Bur. | 124 | Saktipada Khan (M) ... | 17-9 | First. |
| | 125 | Parbatikumar Misra ... | 16-6 | First. |
| | 126 | Satyahari Saha ... | 16-6 | First |
| | 127 | Narayanchandra Saha (M) ... | 19-10 | First |
| | | **Rayna H. E. School.** | | |
| | 128 | Jahnabiprasad Samanta | 16-2 | Second |
| | 129 | Dhirendranath Bandyopadhyay ... | 16 | First. |
| | 130 | Anukulchandra Das ... | 16-5 | Second. |
| | 131 | Radhakrishna Sen ... | 17-9 | Second |
| | 132 | Sudhirchandra Basu (Mm) ... | 17-3 | First. |
| | 133 | Ramkrishna Samanta... | 17-9 | Second |
| | 134 | Dulalchandra Das ... | 18-3 | First |
| | | **Torekona Jagabandhu H. E. School.** | | |
| | 135 | Shaik Afzal .. | 17 5 | First |
| | 136 | Abdull Mosiruddin (m) | 19 4 | First |
| | 137 | Mu alimohan Gangopadhyay (m) ... | 18-8 | First |
| | 138 | Lijaychandra Chattopadhyay ... | 18-3 | First |
| | 139 | Haripada Sarkar ... | 18-7 | First |
| | 140 | Gobindapada Gupta ... | 20-10 | Second |
| | 141 | Haripada Bandyopadhyay ... | 19-1 | First. |
| | 142 | Narendranath Karmakar (m) ... | 18-9 | First |
| | 143 | Kanailal Chattopadhyay ... | 19 | Second |
| | 144 | Sudhirchandra Chandra | 20-1 | Second |
| | 146 | Satchidananda Chakrabarti ... | 20-3 | Second |
| | | **Dishergarh A. C. Institution.** | | |
| | 148 | Nalinaksha Maji ... | 19 8 | Third |
| | 149 | Sripatilal Mukhopadhyay | 17-2 | Second |
| | 150 | Nisapati Bandyopadhyay ... | 18-1 | First. |
| | 157 | Paramanauda Puitandi (M) ... | 17-6 | First. |
| | 159 | Bagalaprasad Datta (M) | 18-8 | First |
| | 160 | Hemchandra Mandal ... | 22-3 | Third |
| | | **Burdwan Municipal School.** | | |
| | 163 | Nimaidas Mukhopadhyay ... | 17-4 | Second |
| | 164 | Durgadas Chaudhuri ... | 17-3 | Second |
| | 167 | Anadiranjan Bandyopadhyay ... | 17 | Second |
| | 169 | Mahimaranjan Mukhopadhyay ... | 20-1 | Second. |
| | | **Baidyapur George Institution.** | | |
| | 172 | Tulsicharan Bandyopadhyay ... | 20 | Second. |
| | | **Memary V. M. Institution.** | | |
| | 173 | Naliniranjan Kundu ... | 16-6 | Second |

| Roll. | No. | Name. | Age. | Division in which the candidate has passed. |
|---|---|---|---|---|
| | | **Menkar H. E. School.** | | |
| Bur. | 174 | Bibhutibhushan Sinha (m) ... | 17-6 | First. |
| | | **Ramgopalpur High School.** | | |
| | 175 | Bholanath De ... | 18 | First |
| | 176 | Radhanath Hajra ... | 17-11 | Second. |
| | 177 | Pranabes Chattopadhyay | 19-10 | Second. |
| | | **Baidyapur George Institution.** | | |
| | 178 | Anathnath Bandyopadhyay (M) ... | 20-1 | First. |
| | 179 | Panchanan Malakar (Mm) ... | 17 10 | First |
| | 180 | Ganapati Misra (Mm) | 17-7 | First. |
| | 182 | Gajendranath Mukhopadhyay (M) ... | 18-1 | First. |
| | 183 | Saradaprasad Kumar ... | 19-3 | First. |
| | 184 | Manmathanath Pathak | 20-4 | First |
| | 185 | Saktipada Kumar ... | 19-5 | Second |
| | | **Dainhat H. E. School.** | | |
| | 186 | Sachindramohan Bandyopadhyay ... | 16-11 | Second. |
| | 187 | Satyaranjan Bandyopadhyay (m) ... | 16-7 | First |
| | 190 | Gopalchandra Baral ... | 17-3 | Second |
| | 191 | Satyakinkar De ... | 16-1 | First. |
| | 193 | Amareschandra Mallik | 17-4 | First |
| | | **Nasigram H. E. School.** | | |
| | 194 | Ramdulal Bhattacharyya ... | 20-11 | First |
| | 195 | Ramratan Pal ... | 19-2 | First. |
| | 196 | Bharatchandra De (M) | 22-7 | First. |
| | 197 | Ratikanta De ... | 17-11 | First. |
| | 198 | Dharamidhar Chakrabarti ... | 19-1 | Third |
| | 199 | Bholanath Bhattacharyya (Mm) ... | 18 5 | First. |
| | 200 | Bibhutibhushan Kundu | 19-8 | Second |
| | | **Memari V. M. Institution.** | | |
| | 202 | Bholanath Bishayi ... | 16-3 | Third |
| | 203 | Sanatkumar Ghoshchaudhuri ... | 20-6 | First |
| | 204 | Sibnarayan Das ... | 16-11 | First. |
| | 205 | Tinkari Bandyopadhyay ... | 22-1 | First. |
| | 206 | Nisakar Ray (Mm) ... | 17-6 | First |
| | 207 | Bholanath Pramanik ... | 19-11 | First |
| | 208 | Mahendramohan Bishayi (m) ... | 16-4 | First. |
| | 209 | Panchanan Bishayi (m) | 16-4 | First. |
| | 210 | Amarendranath Malik | 16-11 | First |

| Roll | No. | Name. | Age. | Division in which the candidate has passed. |
|---|---|---|---|---|
| | | **Burdwan Raj Collegiate School.** | | |
| Bur. | 212 | Basantakumar Maitra... | 17-1 | Second |
| | 213 | Radhikaprasad De ... | 22 6 | Third |
| | 214 | Kshitischandra De (M) | 16-10 | First |
| | 215 | Subodhchandra Basu... | 21-4 | Second |
| | 217 | Bhupatricharan Ghosh | 19-4 | Second. |
| | | **Serampur Union Institution.** | | |
| | 218 | Bhupatinath Sen ... | 17 | Second |
| | | **Sankari H. E. School.** | | |
| | 219 | Ambujabhushan Basu (Mm) ... | 16-1 | First |
| | 220 | Karunamay Jash (Mm) | 20-2 | First |
| | 221 | Balaram Mandal (Mm) | 17-1 | First |
| | 222 | Subhrausuekhar Datta | 16-4 | First |
| | | **Satgachi Sridharpur Abinash Institution.** | | |
| | 223 | Bijaychandra Mandal... | 18-2 | First |
| | 225 | Asutosh Gangopadhyay | 20-1 | Second |
| | 226 | Sundarsinha Chattopadhyay ... | 17-9 | Second |
| | 227 | Saktipada Bhattacharyya ... | 19-4 | First |
| | | **Mankar H. E. School.** | | |
| | 228 | Bibhutibhushan Ray (m) ... | 19-3 | First |
| | 229 | Surathnath Ray ... | 17 | First |
| | 230 | Sitaram Chattopadhyay | 19-7 | First |
| | 231 | Rasbihari Datta ... | 19-8 | Second |
| | 232 | Jamunabihari Ghosh ... | 16-9 | First. |
| | 233 | Kazi Abdul Rezack (m) | 19-3 | Second |
| | 234 | Satyakinkar Mukhopadhyay (Mm) ... | 16-8 | First |
| | 235 | Baidyanath Misra ... | 20-7 | Second |
| | 236 | Krishnadhan Mukhopadhyay ... | 17-2 | First |
| | | **Okersa H. E. School.** | | |
| | 237 | Saurendramohan Mandal (Mm) ... | 16-3 | First |
| | 238 | Bijaychand Mukhopadhyay ... | 17-4 | First |
| | 239 | Abhibhushan Datta ... | 18-3 | First |
| | 240 | Tarapada Bhattacharyya ... | 17-5 | First |
| | 241 | Bimalapati Chaudhuri | 17-4 | First |
| | 242 | Dhanapati Das ... | 19-6 | First |
| | 243 | Aswinikumar Sinha ... | 19 | First. |
| | 244 | Murarimohan Chaudhuri ... | 18-11 | Second |
| | 245 | Pramathanath Haldar | 18-11 | Second |
| | 246 | Nilkanta Bandyopadhyay ... | 20-10 | Second |
| | 247 | Gangaprasad Mukhopadhyay ... | 16-2 | First. |
| | 248 | Sailendramohan Bandyopadhyay ... | 18-7 | Second |
| | 249 | Gulchandra Bandhu ... | 19-1 | Second |
| | 250 | Harakrishna Chattopadhyay ... | 19-6 | Second. |
| | | **Arambagh H. E. School.** | | |
| Bur. | 251 | Pramathanath Hajra (m) ... | 18-1 | First |
| | | **Putsuri I. P. Institution.** | | |
| | 252 | Sankariprasad Acharyya (Mm) ... | 18-1 | First. |
| | 253 | Nibaranchandra Samanta ... | 20-6 | First. |
| | 254 | Sadananda Panja (Mm) | 17-6 | First. |
| | 255 | Durgapada Kundu (m) | 19-2 | First |
| | 256 | Bamandas Majumdar (Mm) ... | 19-4 | First |
| | 257 | Sanatkumar Mallik (m) | 19-1 | First |
| | 258 | Saktipada Mallik ... | 16-11 | First |
| | 259 | Ramaprasad Chaudhury ... | 21-5 | Second |
| | 260 | Umaprasad Ray ... | 19-8 | Second |
| | 261 | Amarendranath Chakrabarti ... | 21-1 | Second |
| | 262 | Sahadeb Mandal ... | 20 | Second |
| | 263 | Amarendra Kundu ... | 21-7 | Second |
| | | **Kurhman N. C. Institution.** | | |
| | 264 | Balaram Ghosh ... | 18 6 | First |
| | 265 | Sibadas Basu ... | 17-2 | Second |
| | 266 | Sharanan Hajra ... | 18-1 | Second |
| | | **Nasigram H. E. School.** | | |
| | 267 | Prasannakumar Ray ... | 18 | Third |
| | 268 | Bhutnath Kundu (M)... | 19-7 | First |
| | | **Burdwan Municipal School.** | | |
| | 269 | Gurupada Bandyopadhyay (Mm) ... | 18 7 | First |
| | | **Sankari H. E. School.** | | |
| | 270 | Praphullachandra Pal... | 20-1 | First |
| | | **Bhalta H. E. School.** | | |
| | 272 | Sripatimohan Ghosh ... | 20 | Second |
| | 273 | Dharanidhar Ray ... | 17-11 | First |
| | | **Nasigram H. E. School.** | | |
| | 276 | Satyakinkar Chattopadhyay ... | 21 | Second |
| | 277 | Kedarnath Ray ... | 20-9 | Second |
| | 278 | Kamakhyapada Bandyopadhyay ... | 18-7 | Third |
| | | **Private students.** | | |
| Bur. P. | 1 | Harendranath Dasgupta | 22 | Second. |
| | 2 | Kamallochan Ray ... | 19-2 | Second. |
| | 3 | Pasupati Ray ... | 28-7 | Second |
| | 6 | Sibarakha Raychaudhuri | 20-5 | Second |
| | 7 | Niranjan Bandyopadhyay ... | 22-5 | Third. |

| Roll. | No. | Name. | Age. | Division in which the candidate has passed. |
|---|---|---|---|---|
| | | **Mehereswari Sukul H. E. School.** | | |
| Chand. | 2 | Rohinikumar Chakrabarti ... ... | 20-2 | Second |
| | 4 | Kaumudimohan Guharaja ... ... | 18-5 | First |
| | 6 | Abanimohan Chakrabarti ... ... | 17-11 | First |
| | 9 | Satischandra Majumdar | 16 | Second |
| | 10 | Krishnasundar Nath ... | 18-1 | Second |
| | 13 | Munsarali Tapader ... | 18-11 | First |
| | | **Baburhat H. E. School.** | | |
| | 16 | Dhirendranath Ghosh | 17-4 | First |
| | 17 | Akrurchandra Palmajumdar ... | 17 8 | First. |
| | 18 | Kalimohan De ... | 19-11 | First. |
| | 19 | Manoranjan Kar ... | 16-4 | First. |
| | 20 | Harihar Datta ... | 17-1 | First. |
| | 21 | Jagadischandra Raychaudhuri ... | 17-7 | Second |
| | 22 | Dwijendramohan Majumdar ... | 19-7 | Second |
| | 23 | Harendrachandra Rudra | 20-3 | First. |
| | 24 | Manoranjan Majumdar | 18-6 | Second |
| | 25 | Rajendrakisor Dalal ... | 19-2 | First |
| | 26 | Mahendrakumar Bhattacharyya ... | 19 1 | Second |
| | 27 | Durgacharan Palmajumdar ... | 17-8 | First. |
| | 28 | Jogendrakisor Mali ... | 19 | Third |
| | 29 | Upendrachandra Sarkar | 18-5 | Second |
| | 30 | Satindrakumar Das ... | 18-7 | Third |
| | 32 | Abutarali Patwari ... | 17-1 | Second |
| | 33 | Abdul Karim Hazra ... | 19-6 | Second |
| | 34 | Mahammad Alam Chaudhuri ... | 17-1 | Second |
| | 35 | Ayubali Molla (Mm) ... | 16-10 | First |
| | 36 | Kasimali Mia .. | 18-2 | First |
| | 37 | Habibulla Patwari (MLm) ... | 18-1 | First |
| | | **Meher-Sahapur Satindra H. E. School.** | | |
| | 38 | Guruprasanna Datta (M) ... ... | 19-8 | First |
| | 39 | Chandranath Nath ... | 19-4 | Second |
| | 40 | Sachindrachandra Dasgupta | 19-1 | Third |
| | 42 | Nurbaksh Mian | 22 | Second |
| | 43 | Surendrakumar De | 20 1 | Second. |
| | 44 | Md Easin Miah | 17-3 | Third. |
| | 45 | Khalilur Rahaman Patwary ... | 20-2 | Third |
| | 47 | Nurbokah Mazumder ... | 22-7 | First |
| | | **Chandpur Ghani H. E. School.** | | |
| | 49 | Saratchandra Bhattacharyya (M) ... | 16-1 | First |
| | 51 | Satischandra Chakrabarti (Mm) ... | 17 | First |
| | 52 | Sureschandra Chanda (Mm) ... ... | 16-1 | First |
| | 53 | Hiralal Chakrabarti (m) | 16-2 | First |
| | 54 | Prankumar Ghosh (Mm) ... . | 17-1 | First. |
| | 55 | Radharaman Ray . | 16 11 | First. |
| | 56 | Biswambhar Ray . | 20-5 | Second |
| | 57 | Rathindrakumar Poddar . | 17-10 | Second |
| | 59 | Priyalal Majumdar . | 18-2 | Second |
| | 60 | Priyanath Ray . | 17-1 | Second |
| | 63 | Brajaraj Nath . | 17 | First. |
| | 64 | Nityagopal Das ... | 16 4 | First. |
| | 66 | Kamudcharan Datta ... | 19-1 | Second |
| | 67 | Sureschandra Datta . | 17-4 | Second |
| | 68 | Abdul Karim . | 19-5 | Third |

| Roll. | No. | Name. | Age | Division in which the candidate has passed. |
|---|---|---|---|---|
| | | **Chandpur Ghani H. E. School—contd.** | | |
| Chand. | 71 | Md. Joynal Abedin ... | 16-7 | Second. |
| | 73 | Anwarul Haque Choudhury ... ... | 19-1 | Third |
| | 76 | Md Abdul Wahed ... | 18 | First. |
| | 77 | Md. Abdul Ghani ... | 22-4 | First. |
| | 78 | Mohobbotulla Patwary | 17-2 | First |
| | 79 | Dahi Uddin Ahamed ... | 16-2 | First |
| | 81 | Khondaker Mohammad Hasan (M) ... | 16-9 | First. |
| | 82 | Satindramohan Majumdar ... ... | 16-11 | First. |
| | | **Rupsa Ahmedia H. E. School.** | | |
| | 83 | Upendrachandra Nandi | 16-1 | First. |
| | 84 | Sureschandra Deb ... | 18-9 | Second |
| | 87 | Jogeschandra Majumdar (M) ... | 16 | First |
| | 89 | Mahendrakumar Sil ... | 17-1 | First |
| | 90 | Anantakumar Chakrabarti ... ... | 16 | Second |
| | 92 | Dhirendrachandra Som | 18-2 | Second |
| | 94 | Biharilal Nath ... | 20-9 | First |
| | 96 | Mazumder Abdul Motaleb Mia (MLm) | 16-1 | First |
| | 97 | Abdul Jalil Chaudhury | 20-2 | Second. |
| | | **Chandpur Hasanali Jubilee High School.** | | |
| | 98 | Chittaranjan Bhattacharyya (M) | 16-4 | First |
| | 99 | Snehansubhushan Baksi (M) ... ... | 16-1 | First |
| | 100 | Ramanimohan Basak ... | 19-2 | First. |
| | 101 | Asutosh Chakrabarti (m) ... ... | 19-10 | First |
| | 102 | Asutosh Chattopadhyay (M) ... ... | 16 2 | First. |
| | 103 | Jagadischandra Das ... | 19 3 | First. |
| | 104 | Ajitlal Das ... | 16-1 | First. |
| | 105 | Bidyabhushan Dasgupta (Mm) ... ... | 18-8 | First. |
| | 107 | Aswinikumar Datta (M) | 22-2 | First. |
| | 108 | Rabindra De (m) ... | 16-4 | First |
| | 109 | Jajneswar De ... | 21-1 | Second |
| | 110 | Jagadischandra De ... | 16 | First |
| | 111 | Haripada Ghosh ... | 16-8 | First. |
| | 112 | Pareschandra Ghosh (m) ... ... | 20-9 | First |
| | 113 | Satyaranjan Guha (m) | 16-5 | First |
| | 114 | Satindramohan Guha ... | 17-7 | First |
| | 115 | Pareschandra Karmakar | 16-1 | Second |
| | 116 | Anathbandhu Karmakar | 16-9 | Second |
| | 117 | Sureschandra Karmakar (m) ... ... | 17-4 | First |
| | 118 | Manindramohan Majumdar (M) ... | 16-3 | First |
| | 120 | Debeschandra Mukhopadhyay (m) ... | 18-2 | First. |
| | 121 | Nikunjalal Pal ... | 17-8 | Second |
| | 122 | Harinarayan Pal ... | 19-1 | Second. |
| | 123 | Manindrachandra Ray (m) ... ... | 19-2 | First |
| | 125 | Anathbandhu Saha ... | 17-4 | First |
| | 126 | Debendrakumar Saha | 19-8 | Second |
| | 127 | Prabodhchandra Sengupta (Mm) ... | 18-1 | First. |
| | 129 | Jadugopal Bandyopadhyay ... | 19-2 | Second |
| | 130 | Jogajiban Bandyopadhyay ... | 16-7 | First. |
| | 132 | Bilasbhushan Chakrabarti ... ... | 25-1 | Second |
| | 135 | Bhagabatiprasanna Dasgupta ... | 16-6 | Second |
| | 136 | Sarojendranath Dasmajumdar (I) ... | 16 | First. |

| Roll. | No. | Name. | Age. | Division in which the candidate has passed. |
|---|---|---|---|---|
| | | **Chandpur Hasanali Jubilee High School**—*concld* | | |
| Chand. | 137 | Pramathanath Datta ... | 16 9 | Second. |
| | 138 | Satyaranjan Ghosh ... | 17-3 | First. |
| | 139 | Dhirendralal Kundu ... | 18-11 | Second |
| | 140 | Abinaschandra Majumdar, I ... ... | 17-3 | First |
| | 141 | Brajeschandra Majumdar ... ... | 16 | First |
| | 142 | Manindranath Mahalanabis ... ... | 17-6 | Second |
| | 144 | Abdul Latiff ... | 16 3 | First |
| | 145 | Choudhury Golam Ahad | 16-1 | Second |
| | 146 | Hafizuddin Ahmed ... | 16-7 | First |
| | 147 | Minhajuddin Ahmed (Mm) ... .. | 16 | First |
| | *148 | Abdul Majid (MLm) ... | 16 6 | First |
| | 151 | Majumdar Muhammed Idris (Mm) ... | 20-4 | First |
| | 153 | Abdul Mannan ... | 17 | Second |
| | 154 | Kalimuddin Ahamed, I | 17-6 | Second |
| | 156 | Abu Ahmed Zahirul Haque ... ... | 22-1 | Second |
| | 159 | Md Eusof Ali ... | 19-1 | Third |
| | 161 | Akkelali Miah ... | 21-7 | Second |
| | | **Sinhergaon Govinda High School.** | | |
| | 162 | Arunkanti Majumdar ... | 18 1 | First |
| | 163 | Pramodeswar Basu ( ) | 16-5 | First |
| | 166 | Manindrachandra Basu (Mm) ... ... | 16 9 | First |
| | 167 | Aswinikumar Majumdar ... ... | 16-10 | Second |
| | 168 | Mahendrachandra Lodh | 23-1 | Third |
| | 170 | Narendranath Guha ... | 16 2 | Second |
| | 172 | Sasankanath Chakrabarti ... ... | 17-10 | Third |
| | 173 | Jajneswar Basu (L) ... | 16 3 | First. |
| | 175 | Nagendrakumar Datta | 16-8 | First |
| | 176 | Sailendramohan Guha | 16 | Second |
| | 177 | Kedareswar De ... | 16 6 | Second. |
| | 179 | Asutosh Das ... | 17-5 | Third |
| | 180 | Umeschandra Majumdar ... ... | 19-3 | Second |
| | 181 | Umeschandra Chakrabarti ... | 18-1 | Second. |
| | 182 | Mahammod Nur Mia ... | 19-1 | Third |
| | 183 | Md. Nawab Ali Mia ... | 24-1 | Third |
| | 184 | Md Fazlul Karim ... | 17-7 | Second |
| | | **Harina Chalitatali Edward Institution.** | | |
| | 185 | Jatindrachandra Majumdar ... | 19-5 | First. |
| | 186 | Chandrakanta Ghosh | 18-7 | First. |
| | 188 | Nagendrachandra Ghoshal ... | 18-7 | First |
| | 191 | Haramohan Sinha ... | 18-1 | Second |
| | 192 | Bipinbihari Chanda ... | 19-1 | Second. |
| | 193 | Priyanath Raychaudhuri (M) ... | 17-11 | First |
| | 194 | Upendrakumar Das ... | 18-2 | Second |
| | 196 | Amarkrishna Das ... | 17 | Second. |
| | 197 | Muslem Patwary ... | 22-2 | Second |
| | | **Sajapti Ramanimohan H. E. School.** | | |
| | 202 | Manmathanath Bhattacharyya .. | 17-1 | Second |
| | 204 | Nagendrachandra Chakrabarti ... | 18-1 | Second. |
| | 205 | Surendramohan Sinha | 22-1 | First |
| | 206 | Karunachandra De ... | 19 | First. |
| | | **Chandra H. E. School.** | | |
| | 208 | Akhilchandra Ray (M) | 17-9 | First |
| | 212 | Harekrishna Chakrabarti (Ml) ... | 16-4 | First. |
| | 213 | Priyalal Nagchaudhuri | 17-1 | First |

| Roll. | No. | Name. | Age. | Division in which the candidate has passed. |
|---|---|---|---|---|
| | | **Rupsa Ahmedia H. E. School.** | | |
| Chand. | 216 | Abdur Rashan ... | 20 | Second. |
| | 217 | Syed Shah Md Shuruj | 22-5 | Third. |
| | | **Bagra Swarupchandra H. E. School.** | | |
| | 220 | Nityananda Das ... | 17-2 | Second |
| | 221 | Dhirendrachandra Palshai ... | 19-2 | First. |
| | 222 | Rakhalchandra Gangopadhyay ... | 19-2 | First |
| | 223 | Jyotirmay Chakrabarti | 16 | First |
| | 224 | Satischandra Sikdar ... | 20-1 | First |
| | 225 | Harendramohan Ray ... | 23-8 | Second |
| | | **Matiabganj J. B. H. E. School.** | | |
| | 227 | Afsaruddin Mea ... | 19-2 | Second |
| | | **Soalia H. E. School.** | | |
| | 228 | Manindrachandra Bhattacharyya (m) ... | 16 6 | First |
| | 229 | Rasmohan Chakrabarti (Mm) ... | 16-2 | First |
| | 232 | Asraffali Miah ... | 17-6 | Third |
| | | **Matiabganj J. B. H. E. school.** | | |
| | 234 | Nityananda Saha (M) | 18 10 | First |
| | 235 | Sukumar Saha ... | 17-1 | First |
| | 236 | Hiralal Saha ... | 18-8 | Second |
| | 237 | Rohinilal Saha ... | 19-8 | Third |
| | 238 | Sureschandra Chakrabarti ... | 17-1 | First |
| | 239 | Lakshmikumar Das (m) | 19 | First |
| | 240 | Jaychandra Bhaumik | 18-3 | Third |
| | 241 | Abdul Gafoor ... | 18-11 | Second. |
| | 242 | Md Serajul Islam ... | 17-7 | First |
| | | **Hajiganj H. E. School.** | | |
| | 244 | Jaladhar Saha ... | 17-1 | First |
| | 246 | Wazuddin Khandakar | 18-2 | Second |
| | | **Bagra Swarupchandra H. E. School.** | | |
| | 248 | Amalakanta Mitra ... ... | | Second |
| | | **Private Student.** | | |
| Chand P. | 1 | Rasaraj Sinha ... | 21-8 | Second |
| | | **Raozan R. R. A. B. C. H. E. School.** | | |
| Chi. | 1 | Mahendrachandra Banik ... | 17-2 | First |
| | 2 | Haripada Chaudhuri ... | 17-5 | First |
| | 3 | Jagadbandhu Sarkar ... | 17-2 | First |
| | 4 | Himansubimal Ghosh ... | 16-4 | First. |
| | 5 | Dinabandhu Das ... | 17-1 | Second |
| | 7 | Sudhirkumar Das ... | 16-3 | First |
| | 8 | Susilchandra Sengupta | 16-6 | First |
| | 9 | Debendralal Majumdar | 17-1 | Second |
| | 10 | Manindrakrishna Sarkar | 16-4 | First |
| | 11 | Bamacharan Baruya ... | 17-4 | First |
| | 12 | Mahammad Maniruzzaman (I) .. | 17-1 | First. |
| | 13 | Md Enamal Hoque ... | 17 | First. |
| | 14 | A. T. Shamsuddin Ahmed Choudhuri ... | 17-7 | First. |
| | 17 | Abdus Salam ... | 16-11 | Second. |
| | 18 | Mohamed Ismail ... | 22-11 | Second. |

| Roll. | No. | Name. | Age. | Division in which the candidate has passed. |
|---|---|---|---|---|
| | | **Sandwip Cargill High School.** | | |
| Chi. | 19 | Rajkumar Das ... | 19 | Second |
| | 20 | Sureschandra Das ... | 17-6 | First |
| | 21 | Jogeschandra Datta .. | 20-1 | Second |
| | 22 | Harakumar Debnath (m) ... | 17 9 | First |
| | 23 | Syamacharan Sil ... | 18-6 | First |
| | 24 | Kshetramohan Patni ... | 19-1 | Second |
| | 25 | Banamali Nath ... | 19 2 | First |
| | 26 | Rajanikanta Sil | 18 3 | Second |
| | 27 | Indubhushan Ray ... | 17 4 | Second |
| | 28 | Nikunjabihari Majumdar (m) | 17 2 | First |
| | 29 | Jatindrachandra Ray .. | 16 2 | First |
| | 30 | Satischandra Das | 18-4 | First |
| | 31 | Haripada Sur . | 20 1 | Second |
| | 32 | Jogeschandra Das .. | 18-8 | First |
| | 33 | Jasodakumar Ranth .. | 20 4 | Third |
| | 35 | Ganeschandra Mukhopadhyay | 17-6 | Second |
| | 36 | Khurshid Alam .. | 18 2 | Third |
| | 39 | Mozibor Rahman (MLm) ... | 16-6 | First |
| | | **Chittagong Government Moslem High School.** | | |
| | 42 | Fazlul Karim (MLm) | 16 | First |
| | 43 | Abdur Rahim . | 16 8 | First |
| | 44 | Muzaffor Ahmmad ... | 17-2 | First |
| | 45 | Obaidal Hoque ... | 18 6 | First |
| | 46 | Abdur Nur | 16 4 | First |
| | 47 | Faiz Ahmad (Mm) . | 16 11 | First |
| | 48 | Siddique Ahmad Chowdhury | 18 4 | Second |
| | 49 | Habibor Rahaman ... | 18 | Second |
| | 50 | Muhzin Rahman .. | 16 8 | First |
| | 51 | Abu Bakar ... | 16-1 | Second |
| | 52 | Sultan Ahmed .. | 19 11 | First |
| | 53 | Hafiz Ahamed ... | 18 1 | First |
| | 54 | Sattar Rahman . | 17 7 | First |
| | 55 | S M Azaheran Nobi . | 18 6 | Second |
| | 56 | Rajameah Chowdhury | 17-2 | Second |
| | 57 | Mamuddin Ahmed | 20 | Third |
| | | **Sandwip Cargill H. E. School.** | | |
| | 61 | Suryyamohan Das ... | 19 3 | Second |
| | | **Shakpura H. E. School, Chittagong.** | | |
| | 64 | Ambicacharan Badya | 16-11 | First |
| | 65 | Syamsundar Bhattacharyya . | 17-10 | Second |
| | 69 | Jogeschandra Chaudhuri | 17-2 | Second. |
| | 70 | Tejendralal Das .. | 20-2 | Second. |
| | | **Saroatali P. C. Sen H. E. School.** | | |
| | 78 | Chandrakumar Bhattacharyya (M) ... | 17 10 | First. |
| | 79 | Narendralal Bhattacharyya ... | 16-2 | Second |
| | 80 | Nripatiranjan Bhattacharyya ... | 18-7 | Third |
| | 81 | Gopalchandra Chakrabarti ... | 17 | First. |
| | 82 | Nityagopal Chakrabarti ... | 18-10 | Second |
| | 83 | Nanigopal Chaudhuri (Mm) ... | 16 | First. |
| | 84 | Chintaharan Das ... | 16-2 | First. |
| | 85 | Phanindralal Das (Mm) | 19-1 | First |
| | 86 | Sudhansubimal Das ... | 16 | First |
| | 89 | Rebatiraman De (Mml) | 16-8 | First |
| | 90 | Kshetramohan Karmakar ... | 19-2 | Second |
| | 91 | Jadabananda Parial ... | 18-1 | First. |

| Roll | No | | Age | Division in which the candidate has passed. |
|---|---|---|---|---|
| | | **Saroatali P. C. Sen H. E. School**—*concld* | | |
| Chi. | 92 | Bisweswar Sengupta (Mm) .. | 16 4 | First |
| | 93 | Haripresad Sen (Mm) | 16-11 | First. |
| | 94 | Niradranjan Sen (Mm) | 18 | First |
| | 96 | Haripresanna Chaudhuri .. | 18 | Second |
| | 97 | Debendralal De . | 19-1 | Second |
| | 98 | Prasannakumar De | 17-9 | Second |
| | 99 | Paresnath Kanungo (H) | 17-1 | First |
| | 100 | Mukundaprasad Sen | 18-10 | Second |
| | 102 | Surendralal Baruya .. | 18-1 | Second |
| | 103 | Himansubimal Sen ... | 18 8 | First |
| | 104 | Manindralal Bal (ml) .. | 17 1 | First |
| | | **Mahamuni Anglo-Pali Institution.** | | |
| | 107 | Rohiniranjan Kanungo (m) .. | 16-8 | First |
| | 108 | Narendralal Kulal | 19 1 | Second |
| | 110 | Arabinda Baruya | 16 2 | First |
| | 112 | Amulkumar Sen | 16 1 | Second |
| | 113 | Hemangabikas Baruya | 16 5 | First |
| | 114 | Satischandra Baruya ... | 17 7 | Second |
| | 115 | Sudhirkumar Baruya (Ll) | 16 | First |
| | 117 | Hemendralal Mutsuddi | 16-1 | First |
| | 118 | Aparananda Baruya (Ll) | 16-1 | First |
| | 119 | Bhupatiranjan Baruya | 16 7 | First |
| | 120 | Madhuchandra Baruya | 20 1 | Second |
| | 121 | Nikunjabihari Baruya | 16-11 | First |
| | 122 | Niranjan Baruya | 16 8 | Second |
| | 123 | Rohiniranjan Baruya (Mm) ... | 16-9 | First |
| | 124 | Santiranjan Baruya | 16 4 | First |
| | 125 | Surendralal Chaudhuri | 18 8 | Third |
| | 126 | Manindralal Mutsuddi | 18 2 | Second |
| | 127 | Sakyapada Mutsuddi . | 18 2 | Third |
| | | **Satkania H. E. School.** | | |
| | 129 | Pankajaprasad Chaudhuri (m) .. | 17-2 | First |
| | 131 | Ranjanikanta Chakrabarti ... | 17 | First |
| | 132 | Sureschandra Das ... | 22 | Second |
| | 133 | Sumantaram Dhar .. | 19 1 | First |
| | 134 | Mangaliram Dhar ... | 16 8 | First |
| | 135 | Harichandra Dhar ... | 16-3 | Second |
| | 136 | Ramcharan Guha (M) | 16-1 | First |
| | 137 | Bhubanbihari Ghosh .. | 17-1 | First |
| | 138 | Nahiranjan Majumdar | 19-6 | Second |
| | 140 | Atindralal Datta ... | 16-8 | Second |
| | 141 | Pulinbihari Das ... | 20-1 | Third |
| | 142 | Mokshadaranjan Das ... | 18-1 | Second |
| | 143 | Dwijendralal Nandi (H) | 17-4 | First |
| | 144 | Dhirendrachandra Pal | 16-3 | Second |
| | 145 | Amiyakumar Sanyal ... | 18 2 | Second |
| | 146 | Krishnananda Sanyal | 18-5 | Third |
| | 147 | Abdul Samad ... | 16-5 | First |
| | 148 | Samsajaman Chowdhury . | 17-2 | Second |
| | 149 | Fazal Ahamad .. | 17-1 | Second |
| | 151 | Amir Hamza ... | 18 3 | First |
| | 152 | Abdul Gani ... | 20 3 | Second |
| | | **Chittagong Collegiate School.** | | |
| | 156 | Binaykumar Sen, II ... | 16-1 | First |
| | 157 | Albert Nelson Seine ... | 17-2 | Second |
| | 158 | Jogendrakumar Sen (m) | 16 10 | First |
| | 159 | Syed Md Sulaman ... | 16 6 | Second. |
| | 160 | Afsaruddin Ahmad (Vm) ... | 17-1 | First |
| | 161 | Binaybhushan Chakrabarti (m) ... | 17-4 | First |
| | 162 | Jasodaranjan Chakrabarti (m) ... | 17-7 | First. |

**Chittagong Collegiate School**—*concld*

| Roll. | No. | Name | Age. | Division in which the candidate has passed |
|---|---|---|---|---|
| Chl. | 163 | Manindrakumar Chakrabarti ... | 18-1 | First |
| | 164 | Someschandra Ghosh .. | 16 | First |
| | 165 | Bimalkumar Mukhopadhyay (MLml) . | 16-3 | First |
| | 166 | Birendrakumar Ghosh | 18-5 | Second |
| | 167 | Kumudkanta Chakrabarti . | 16 4 | First |
| | 168 | Dhirendrakumar Das . | 18 | First |
| | 169 | Manojmohan Das ... | 16-10 | First |
| | 170 | Jyotsnamay Dasgupta | 17-7 | Second |
| | 171 | Sukumar Dasgupta .. | 17-1 | First |
| | 172 | Haripada Ghosh (Mm) | 16-4 | First |
| | 173 | Kanailal Kundu .. | 17 2 | First |
| | 174 | Manindralal Nandi . | 16 8 | Second |
| | 175 | Amiyacharan Pal (Mm) | 18 1 | First |
| | 176 | Hridayranjan Pal (Mm) | 17-8 | First |
| | 177 | Bhupendrakumar Rakshit . | 16-3 | First |
| | 179 | Syamacharan Sarkar | 16 11 | First |
| | 180 | Basantakumar Sen (m) | 16 6 | First |
| | 181 | Lalitchandra Chaudhuri | 16-2 | Second |
| | 182 | Tejendralal Chaudhuri | 16 5 | Second. |
| | 183 | Sudhischandra Ghatak | 17-3 | Second |
| | 184 | Sureschandra Pal | 16-7 | First |
| | 185 | Rabindranath Pal .. | 17-1 | First |
| | 186 | Kshitischandra Ray ... | 16 6 | Second |
| | 187 | Binaykumar Sen, I .. | 16 | Second |
| | 188 | Binodbihari Nandi ... | 20 2 | First |
| | 189 | P P Bodhisatta Saran Baruya (I) . | 16 1 | First |
| | 190 | Praphullaranjan Baruya | 16-4 | First |
| | 191 | Rohiniranjan Baruya (MLl) .. | 16-2 | First |
| | 192 | Sudhirchandra Pal ... | 16-7 | First |
| | 193 | D P Priya Darshi Baruya ... | 17-1 | Second |
| | 194 | Pulinbihari Baruya (I) | 19-8 | Second |
| | 195 | Santimay Chaudhuri ... | 17-3 | First |
| | 197 | D. B Dharmadasa ... | 17-5 | Second. |
| | 198 | Badiar Rahaman ... | 16 11 | First |
| | 199 | Kabiruddin Ahammed | 16-2 | First |

**Anwara H. E. School, Chittagong.**

| Roll. | No. | Name | Age. | Division in which the candidate has passed |
|---|---|---|---|---|
| | 200 | Nirmalchandra Chaudhuri (Mm) .. | 17 8 | First |
| | 201 | Manindranath Chaudhuri (m) | 16 7 | First |
| | 202 | Karunakumar Chakrabarti ... | 17 2 | Second |
| | 203 | Durgamohan De (m) .. | 17-1 | First |
| | 204 | Narayan De ... | 17-1 | Second |
| | 205 | Jagatchandra De ... | 17 11 | First. |
| | 207 | Sudhansubimal Chaudhuri | 17 1 | Second |
| | 208 | Mahendralal De .. | 16-9 | Second |
| | 209 | Ambikacharan De .. | 17-1 | First |
| | 210 | Satyendranath Nandi .. | 17-2 | Third |

**Chittagong Umatara Institution.**

| Roll. | No. | Name | Age. | Division in which the candidate has passed |
|---|---|---|---|---|
| | 213 | Harendrakumar Majumdar . | 22 | Second |
| | 214 | Hemchandra Pal . | 16-10 | First |
| | 218 | Subodhbikas Datta . | 17-7 | Second |
| | 219 | Sudhendubikas Mitra | 16 | First. |
| | 220. | Surendrachandra Bhattacharyya (m) | 17-6 | First |
| | 222 | Satyenduprakas Ray . | 17-2 | Second |
| | 227 | Noor Ahamed (Mm) . | 16 6 | First |

**Patiya High School, Chittagong.**

| Roll. | No. | Name | Age. | Division in which the candidate has passed |
|---|---|---|---|---|
| | 228 | Birendralal Bhanja ... | 16-1 | First |
| | 230 | Binodbihari Bhattacharyya ... | 18-9 | Second. |

**Patiya High School, Chittagong**—*concld.*

| Roll. | No. | Name | Age. | Division in which the candidate has passed. |
|---|---|---|---|---|
| Chl. | 235 | Sachindramohan Biswangiee .. | 16-1 | Second |
| | 236 | Sasadhar Biswas (Mm) | 16 1 | First |
| | 237 | Bhagabanchandra Chakrabarti (M) .. | 16-1 | First |
| | 241 | Nirendralal Chakrabarti | 18-8 | Second |
| | 243 | Nikunjabihari Chaudhuri. ... | 16-11 | First. |
| | 244 | Sureschandra Chaudhuri | 16-7 | Second |
| | 245 | Amarendranath Das ... | 16 | Second |
| | 247 | Satkari Das ... | 21-1 | Second |
| | 248 | Sudhansubimal Das ... | 16-2 | First |
| | 253 | Upendralal De ... | 16-1 | Second |
| | 254 | Manindralal Guha . | 17-2 | Second |
| | 256 | Biswaranjan Kanungo | 16-1 | First |
| | 257 | Manindralal Mitra ... | 16-1 | First. |
| | 258 | Nalinranjan Pal ... | 17 1 | Second |
| | 259 | Nirmalnayan Pal ... | 17-1 | Second |
| | 262 | Dineschandra Sen (Mml) ... . | 16 3 | First |
| | 263 | Santibikas Sen (V) ... | 16 4 | First |
| | 264 | Phanibhushan Sengupta ... | 16-5 | First |
| | 266 | Surendrabijay Datta .. | 17-9 | Second |
| | 267 | Birendralal Hor .. | 18 | Second |
| | 269 | Natanchandra Baruya | 16 7 | First |
| | 272 | Nirmalchandra Baruya (Ll) . .. | 16 2 | First |
| | 275 | Ahmador Rahmon ... | 17 2 | First |

**Patiya Rahatali H. E. School.**

| Roll. | No. | Name | Age. | Division in which the candidate has passed. |
|---|---|---|---|---|
| | 276 | Tripuracharan Datta (ml) | 17 3 | First |
| | 277 | Jamini ranjan Biswas | 17-1 | First |
| | 278 | Bisweswar Bhattacharyya ... ... | 16-6 | Second. |
| | 280 | Haripada Nandi ... | 16 | First. |
| | 281 | Satischandra Chakrabarti ... ... | 19 2 | First |
| | 283 | Dhirendralal Bhattacharyya .. | 17 1 | Second |
| | 284 | Tejendrachandra Bhattacharyya ... | 19 5 | Second |
| | 286 | Gopalkrishna Bhattacharyya ... | 17-1 | Third. |
| | 291 | Debendrachandra Das | 17 6 | Second |
| | 297 | Barindralal Baruya ... | 21-2 | Third |
| | 298 | Harendralal Talukdar | 19-6 | Third |
| | 303 | Lalitkumar Baruya ... | 22 | Second |
| | 304 | Harischandra De ... | 16-10 | Third. |
| | 305 | Ahamador Rahaman Chowdhury ... | 18-2 | Third |
| | 307 | Md Nurazzaman | 17-2 | Third |
| | 310 | Erfan Ali | 17-3 | Second |
| | 311 | Nazir Ahmed | 16-3 | Second. |
| | 312 | Sayed Ahmed | 16 | Second. |
| | 313 | Abdul Khair | 17-1 | First. |
| | 315 | Muhammad Idris | 17-5 | Second |

**Roshangiri High English School.**

| Roll. | No. | Name | Age. | Division in which the candidate has passed. |
|---|---|---|---|---|
| | 319 | Ashrofali ... | 22-7 | Second |
| | 320 | Satischandra Sen ... | 16-2 | Second. |
| | 321 | Saradacharan De ... | 20-7 | Second. |
| | 322 | Nagendrachandra Datta ... | 17-2 | Second. |

**Patiya Rahatali H. E. School.**

| Roll. | No. | Name | Age. | Division in which the candidate has passed. |
|---|---|---|---|---|
| | 323 | Abdul Munaff .. | 16 | Third |

**Banigram H. E. School.**

| Roll. | No. | Name | Age. | Division in which the candidate has passed. |
|---|---|---|---|---|
| | 329 | Dwijendralal Raychaudhuri ... | 16-5 | Second. |
| | 330 | Sudhansubimal Ray ... | 16-8 | First. |

**Banigram H. E. School**—*concld.*

| Roll. | No | Name | Age | Division in which the candidate has passed |
|---|---|---|---|---|
| Chi. | 331 | Adwaitchandra Chaudhury .. .. | 16-2 | First |
| | 332 | Prabodhchandra Chaudhuri .. ... | 16 8 | Second |
| | 334 | Ferdous Ahmad .. | 16-1 | Second. |

**Fatikcheri Coronation H. E. School.**

| Roll. | No | Name | Age | Division in which the candidate has passed |
|---|---|---|---|---|
| | 335 | Nisichandra Sarma (M) | 17-2 | First |
| | 336 | Upendrachandra Palit | 18 2 | First |
| | 337 | Mahendrakumar Nath (Mm) ... ... | 16-2 | First |
| | 338 | Aparnacharan De (Mm) | 17 8 | First |
| | 339 | Krishnamohan Dhar ... | 17 1 | Second |
| | 340 | Manindrakumar Pal | 18-1 | Second |
| | 341 | Nirendralal Pal . | 18 2 | First |
| | 343 | Prasannakumar Banik | 19-1 | Second |
| | 345 | Ali Ahamed .. | 21-1 | Third |
| | 346 | Omda Meah, I .. | 17-3 | First |
| | 349 | Md Misbahul Islam | 16-1 | First |

**Durgapur H. E. School.**

| Roll. | No | Name | Age | Division in which the candidate has passed |
|---|---|---|---|---|
| | 351 | Abdul Khalek | 17-6 | Second |
| | 352 | Surendrakumar Chakrabarti (Mm) | 16-1 | First |
| | 353 | Manadakumar Chakrabarti ... . | 17-2 | Second |
| | 354 | Nagendrakumar De (Mm) . . . .. | 16-4 | First |
| | 356 | Binaybhushan Palit (Mm) . | 16 | First |
| | 357 | Lalitranjan Sengupta (m) ... . | 20 6 | First |
| | 358 | Satischandra Sukladas | 21-2 | Second |
| | 359 | Syamacharan Chakrabarti .. ... | 17 5 | Third |
| | 360 | Debendrakumar D | 17 2 | First |

**Fatehabad H. E. School.**

| Roll. | No | Name | Age | Division in which the candidate has passed |
|---|---|---|---|---|
| | 361 | Nagendrachandra Datta | 20-1 | First. |
| | 362 | Nikunjabihari Chaudhuri . . | 17-2 | Third. |
| | 363 | Mahendralal De | 18 4 | First |
| | 364 | Manindramohan Bhattacharyya (m) | 17 | First |
| | 365 | Haragobinda Pal ... | 20-5 | Second |
| | 366 | Hemendrachandra Sen | 16-1 | First |
| | 367 | Haripada Das . | 18 2 | First |
| | 368 | Goshthabihari Saha (m) | 18-2 | First |
| | 369 | Brajendrakumar Pal . . | 18 3 | First |
| | 371 | Himansubimal Biswas | 16-5 | First |
| | 372 | Satischandra Banik ... | 20-3 | Second |
| | 374 | Abul Kashem Khan . | 16 | First |
| | 375 | Md Shamsul Huda ... | 16-11 | Second |

**Hathazari Parbati Institution.**

| Roll. | No | Name | Age | Division in which the candidate has passed |
|---|---|---|---|---|
| | 376 | Ramaniranjan Chakrabarti . | 17-2 | First. |
| | 378 | Rabindranath Dhar (m) | 16-10 | First |
| | 379 | Sudhirchandra Datta | 16-7 | First |
| | 381 | Guneschandra Guha (M) .. ... | 16-2 | First. |
| | 385 | Sudhansubimal Baruya | 16-7 | First |
| | 387 | Fozalul Karim Ahamed | 18 2 | First |
| | 388 | Mahammed Idris Meah | 17-10 | Second |
| | 389 | Naderzzaman .. ... | 19 3 | Second. |
| | 390 | Fazlul Karim ... | 17-7 | Second. |

**Chittagong H. E. School.**

| Roll. | No | Name | Age | Division in which the candidate has passed |
|---|---|---|---|---|
| | 394 | Satischandra Datta ... | 19 | Second |
| | 395 | Sudhirkumar Ray . | 17-9 | First |
| | 396 | Nikunjabihari Das ... | 18-5 | Second |

**Chittagong H. E. School**—*concld.*

| Roll. | No | Name | Age | Division in which the candidate has passed. |
|---|---|---|---|---|
| Chi. | 398 | Kshitischandra Bhattacharyya ... | 17 1 | First |
| | 399 | Sadaymohan Bandyopadhyay .. | 19 | Second. |
| | 400 | Sachindrachandra Das | 16-3 | Second. |
| | 402 | Radhakrishna Nath ... | 16 11 | Second |
| | 404 | Mihirkumar Chaudhuri | 18-2 | Second |
| | 405 | Prabhatkusum Datta | 17-2 | Second |
| | 406 | Pulinbihari Lala .. | 21-8 | Second |
| | 409 | Mohammad Ibrahim Ahabbas Chowdhury | 16 | Second |
| | 411 | S Faiz Ahmed . | 17-6 | Third |
| | 413 | M Atazuddin Ahmed | 16 1 | Second |
| | 416 | Md Abdul Monuff Choudhury ... | 17 11 | First. |
| | 417 | Kabir Ahamed . | 17 | Third |
| | 418 | Atawar Rahman ... | 17-8 | Second |
| | 121 | Abul Bashar Chowdhury | 16-3 | Third |

**Chittagong Municipal School.**

| Roll. | No | Name | Age | Division in which the candidate has passed |
|---|---|---|---|---|
| | 422 | Susobhan Datta (MVml) | 16 | First |
| | *423 | Natendrabimal Sen (Mm) . | 16 | First |
| | 424 | Anilkumar Guha . | 18-9 | First |
| | 425 | Himansubimal Saha (Mm) | 16-1 | First |
| | 426 | Mukundagopal Datta .. | 17-3 | First |
| | 427 | Sudhirchandra Sengupta (M) .. | 17 2 | First |
| | 428 | Nirmalchandra Chaudhuri (M) . | 16 | First. |
| | 429 | Rohinikumar De (Mm) | 16-1 | First |
| | 430 | Rathindranath Sen . | 17-1 | Second |
| | 431 | Debendranath Chaudhuri . | 19 6 | First |
| | 432 | Sureschandra De . | 16-7 | Second |
| | 433 | Nripendranath Chakrabarti .. | 17 1 | First. |
| | 435 | Praphullakumar Bandyopadhyay ... | 17-11 | Second |
| | 437 | Pramodranjan Biswas | 18-1 | First. |
| | 438 | Kalipada Chakrabarti | 17-11 | First. |
| | 439 | Phanindrachandra Ray (Mm) ... | 16 | First. |
| | 440 | Syamapada Sarkar (m) | 16-11 | First |
| | 441 | Syamapada Dastidar (MMc) ... | 16 | First. |
| | 442 | Sukumar Basuraychaudhuri (Mm) ... | 16-8 | First. |
| | 443 | Pramodranjan Ray .. | 16 | Second |
| | 444 | Sudhansubimal Chaudhuri (VIH) .. | 16-1 | First |
| | 445 | Dhirendrachadra Chakrabarti (H) ... | 16 | First |
| | 446 | Nakuleswar Mukhopadhyay (M) ... | 18-3 | First |
| | 447 | Ramanimohan Demajumdar ... | 19-2 | First |
| | 448 | Manindralal Kanungo | 16-6 | First |
| | 449 | Niranjan Sen ... | 16 | First |
| | 450 | Dwijendralal Baruya .. | 16-1 | First |
| | 451 | Narendranath Guhathakurta ... | 16-7 | Second |
| | 452 | Ardhendubimal Sikdar | 17-1 | Second |
| | 453 | Pramodranjan Chaudhuri (M) ... | 18-1 | First |
| | 454 | Lakshminarayan Dasgupta . .. | 17 11 | Second. |
| | 455 | Rebatiraman Chaudhuri | 17-8 | Second |
| | 456 | Nikhilchandra Majumdar .. | 19-7 | Second. |
| | 457 | Birendranath Sengupta | 17-10 | Second. |
| | 458 | Surathchandra Ray . | 19-6 | Second |
| | 459 | Phanindralal Kanungo | 16 7 | Second |
| | 460 | Upendrachandra Das ... | 19 1 | Second. |

| Roll | No | Name | Age. | Division in which the candidate has passed |
|---|---|---|---|---|
| | | **Noapara H. E. School.** | | |
| Chi. | 462 | Jamir Hossain .. | 19-2 | Second |
| | 463 | Madhusudan Bhattacharyya ... | 16-6 | First |
| | 464 | Manomohan Bhattacharyya (M) ... | 16 1 | First |
| | 465 | Ramaniranjan Deb ... | 18-4 | Second |
| | 466 | Haripraspna Kaibarta | 17-1 | Second |
| | 467 | Sudhendumohan Mukhopadhyay (Mm) ... | 17 6 | First |
| | 468 | Ramanimohan Sarma (MVm) ... | 18 6 | First |
| | 469 | Indubhushan Sen (Ml) | 17 11 | First |
| | 470 | Madhusudhan Sen ... | 16 | First |
| | 471 | Jogendrachandra Bhattacharyya .. | 19-11 | Second |
| | 472 | Kshetramohan Ghosh | 18-2 | Second |
| | 473 | Ajitkumar Sen ... | 16-1 | Second |
| | 474 | Atithiranjan Sen | 18-8 | Third |
| | 475 | Bilaschandra Sen ... | 16 1 | Second |
| | 476 | Bibhutibhushan Baruya (Ll) ... | 16 1 | First |
| | 477 | Birendralal Baruya .. | 16 1 | Second |
| | 478 | Buddhakinkar Baruya | 17-3 | First |
| | 479 | Haripraspd Bhattacharyya ... | 17-2 | First |
| | 480 | Rajaniranjan Mutsuddi | 16 2 | Second |
| | | **Chittagong Municipal School.** | | |
| | 481 | Hiranmaykumar Sengupta ... | 16 4 | Second |
| | 483 | Kamakhyacharan Ray | 16-5 | Second |
| | 485 | Satischandra De .. | 17-8 | Second |
| | 486 | Manindrakumar Biswas (M) . | 18-2 | Second |
| | 487 | Nurul Amin Chowdhury . | 17-4 | First |
| | 488 | Syed Abdul Alim ... | 17-4 | First |
| | 489 | Shaikh Fazal Ahmad (M) .. | 16 1 | First |
| | 492 | Syed Emaduddin Ahamed ... | 16 1 | First |
| | | **Gasbaria Nityananda H. E. School.** | | |
| | 494 | Aswinikumar Biswas .. | 18 1 | Third |
| | 495 | Rabindralal Daschaudhuri (M) ... | 18-3 | First |
| | 496 | Basudharanjan Rakshit | 16-1 | Second |
| | 497 | Bipinchandra Datta .. | 17-5 | First. |
| | 500 | Manindrachandra Majumdar .. | 17-2 | First |
| | | **Paraikora Nayantara Institution.** | | |
| | 503 | Hariranjan Biswas .. | 19-7 | Second |
| | 504 | Sitalchandra Bhattacharyya ... | 17 2 | Third |
| | 505 | Jamini mohan Chakrabarti ... | 16 3 | First |
| | 506 | Gangadhar Majumdar | 16-9 | First |
| | 507 | Bhubanbijay Bhattacharyya ... | 16-3 | Second. |
| | 509 | Mohanbasi Majumdar | 16-8 | First |
| | 510 | Kedarnath Ray ... | 16 5 | Second |
| | 511 | Biharirnjan Baruya ... | 18-1 | Second |
| | | **Rangamati H. E. School** | | |
| | 512 | Nagendrachandra De (Mm) ... | 17 3 | First |
| | 513 | Subodhchandra Mitra | 18-2 | Second. |
| | 516 | Priyadaranjan Baruya | 16 2 | First |
| | 517 | Jagatchandra Khisha | 20-5 | Second |
| | 518 | Niradranjan Dewan (M) | 18-3 | First. |
| | 519 | Fojalul Karim Ahamed | 16-3 | Second. |

| Roll | No | Name. | Age. | Division in which the candidate has passed. |
|---|---|---|---|---|
| | | **Sitakund H. E. School.** | | |
| Chi. | 525 | Nesar Ahmad (L) ... | 17-1 | First |
| | 528 | Md Jamalullah ... | 16 | Second. |
| | | **Chittagong J. M. Sen's Institute.** | | |
| | 534 | Sudhansubimal Datta (Mml) ... | 16-7 | First. |
| | 535 | Akshaykumar Majumdar ... | 16-2 | Second. |
| | 536 | Rebatimohan Karmakar | 19-9 | Second. |
| | 537 | Manoranjan Biswas .. | 17-8 | First |
| | 539 | Abanibinod Pal | 17-8 | Second |
| | 540 | Bidhubhushan Nath .. | 22-2 | Second. |
| | 541 | Sachindrakumar Rakshit ... | 16 | Second |
| | 545 | Rabindralal Das ... | 19-7 | Second |
| | 550 | Debendralal Chakrabarti .. | 19 | Second |
| | 552 | Binodbihari Sengupta | 18-2 | Second |
| | 563 | Maung Chaw Tha ... | 16-7 | First |
| | 564 | Rajendrakumar De .. | 16 6 | First |
| | | **Jafarnagar Aparnacharan H. E. School.** | | |
| | 574 | Nibaranchandra Sen ... | 17-4 | First |
| | 575 | Sasikumar De .. | 19 4 | Second |
| | 576 | Sudhirkumar De ... | 17-5 | Second |
| | 577 | Jatindramohan De ... | 16-6 | Second. |
| | 578 | Pranhari De .. | 20-11 | Second |
| | 582 | Kshetramohan Chakrabarti .. | 19-6 | Second |
| | 584 | Karunakumar Das ... | 18 4 | Second |
| | 586 | Monir Ahmad (M) ... | 17-9 | First |
| | 590 | Kazi Md Azhullah | 16 5 | Third |
| | | **Kadhurkhil Akbar Ali H. E. School.** | | |
| | 591 | Rajanikanta Datta (Mml) .. | 19 9 | First |
| | 592 | Debendrabijay Chaudhuri .. | 19-1 | First |
| | 594 | Balaram Chaudhuri ... | 18 2 | Second |
| | 597 | Manindranath Chakrabarti, I ... | 16-4 | First |
| | 598 | Manindranath Chakrabarti, II ... | 16 9 | Second |
| | 599 | Bidyutkumar Chaudhuri ... | 17-11 | Second |
| | 600 | Anangamohan Chaudhuri ... | 16-3 | Third |
| | 602 | Manomohan Gupta ... | 19-10 | Second. |
| | | **Abutorab R. L. H. E. School.** | | |
| | 603 | Sudhansubikas Aich (M) | 16-11 | First. |
| | | **Rangunia H. E. School.** | | |
| | 613 | Rajani Baruya (Ll) | 16-2 | First |
| | 614 | Jaminiranjan Baruya | 17-7 | Second |
| | 616 | Himansubimal Mutsuddi ... | 17-1 | First. |
| | 617 | Ranadaranjan Mutsuddi | 18-1 | First |
| | | **Dhalghat H. E. School.** | | |
| | 619 | Sasadhar Chakrabarti (m) ... | 17-11 | First |
| | 620 | Basantakumar Das ... | 16-1 | First |
| | 621 | Ramaniranjan Chakrabarti ... | 18-2 | Second |
| | 622 | Praphullaranjan De ... | 16-1 | First |
| | 623 | Kedareswar Dasgupta | 19 3 | First |
| | 624 | Sukhendubikas De ... | 19-1 | First. |
| | 626 | Lalmohan Sen (M) ... | 17-6 | First. |
| | 628 | Subodhchandra Biswas | 16-1 | Second. |
| | 629 | Tarapada Das ... | 16 1 | Third |

| Roll. | No. | Name. | Age. | Division in which the candidate has passed. |
|---|---|---|---|---|
| | | **Dhalghat H. E. School**—*contd.* | | |
| Chi. | 630 | Birendranarayan Bhattacharyya ... | 16-1 | Second |
| | 633 | Upendranath Bhattacharyya ... | 18-4 | Second |
| | 634 | Kshirodchandra Chaudhuri ... | 18-4 | Second |
| | 635 | Manindralal Kanungo (I) .. | 16-2 | First |
| | 636 | Surendramohan Bhattacharyya (I) ... | 19-2 | First. |
| | 639 | Md Anu Meah ... | 18 4 | Second |
| | | **Zorawargang R. R. H. E. School.** | | |
| | 640 | Surendrakumar De ... | 19-6 | Second |
| | 641 | Harimohan De ... | 19-2 | First |
| | 642 | Bhagirathchandra Datta (m) ... | 17-5 | First |
| | 644 | Manomohan Pal . | 16-6 | First |
| | 645 | Bimalchandra Chakrabarti ... | 17-1 | Second |
| | 646 | Mahendrakumar Datta | 20-2 | Second |
| | 648 | Birendrakumar De . | 20-10 | Third |
| | 649 | Jatindramohan Lodh ... | 16-6 | First |
| | 650 | Jogendrakumar Nath | 19 | First |
| | 652 | Krishnachandra Saha | 18-2 | Second |
| | 653 | Binodbihari Som .. | 16-1 | First |
| | 654 | Md Nurul Hoque | 20-8 | Second |
| | 655 | Nural Islam Choudhury .. | 19-2 | Second |
| | 656 | Rabiul Hossain (L) ... | 16-7 | First |
| | 657 | Badiuzzaman . | 17-8 | Second |
| | 658 | Sultan Ahmed (L) ... | 17-4 | First |
| | | **Mymensingh Zilla School.** | | |
| | 669 | Sukumar Basu (MVH) | 16 | First |
| | | **St. Chrysostoms High School.** | | |
| | 680 | Himansubimal Majumdar (m) ... | 17-2 | First |
| | | **St. Anthony's High School.** | | |
| | 682 | Karkobad Ahmed .. | 16-3 | First |
| | | **Chittagong Dr. Khastagir's H. E. School for Girls.** | | |
| Chi F. | 1 | Amiyamakha Debi ... | ... | First |
| | 2 | Subarnalata Das (Vm) ... | ... | First |
| | 3 | Muriel Gladyse Seine .. | ... | First |
| | 4 | Nilima Sengupta (V) ... | ... | First |
| | 5 | Aruna Dasgupta .. | .. | First |
| | | **Female Private Student.** | | |
| Chi. F. P. | 1 | Pritikushum Das ... | ... | First. |
| | | **Private Students.** | | |
| Chi. P. | 2 | Hemendralal Chaudhuri | 20-3 | First |
| | 6 | Jogendrabijay Das ... | 20-2 | Second |
| | 7 | Sudhiranjan Sen .. | 16-. | Second |
| | 9 | Nirendranarayan Sen .. | 23 | Second |
| | 10 | Himansubimal Sen ... | 17 | Second. |
| | 13 | Harendramohan Raychaudhuri ... | 19-8 | Second. |
| | | **Teachers.** | | |
| Chi. T. | 1 | Dineschandra Das ... | 24-6 | Second. |
| | 3 | Muhammad Yaqub ... | 23-5 | Passed. |
| | | **Madhabpur S. L. H. E. School.** | | |
| Com. | 1 | M. Akamat Ali ... | 19-6 | First |
| | 2 | Surendrachandra Deb ... | 18-1 | First. |
| | 5 | Kafiluddin Ahmed ... | 20 | Second. |
| | 6 | Narendrachandra Chakrabarti ... | 19-1 | Second. |

| Roll. | No | Name | Age. | Division in which the candidate has passed |
|---|---|---|---|---|
| | | **Kuti H. E. School.** | | |
| Com. | 8 | Jogendrachandra Datta | 17-2 | First |
| | 11 | Surendrabijay Deb .. | 21 8 | Second. |
| | 13 | Masu Mia ... | 20-1 | First |
| | 15 | Abdun Nur ... | 16-2 | Second |
| | | **Muradnagar D R. H. E. School.** | | |
| | 17 | Tofazzel Hossain ... | 18 2 | First |
| | 18 | Nisikanta De (Vml) ... | 19-9 | First |
| | 19 | Nibaranchandra Das ... | 16-4 | First |
| | 20 | Chintaharan Bhaumik (M) ... | 18 2 | First |
| | 21 | Haridas De ... | 18 8 | First |
| | 22 | Satyendramohan Bhaumik . | 18 | First. |
| | 23 | Nabadwipchandra De | 19-7 | Second |
| | | **Bidyakut Amar H. E. School.** | | |
| | 29 | Satischandra Datta ... | 16-10 | First |
| | 30 | Niradacharan Chakrabarti . ... | 18-1 | First |
| | 32 | Brajendrakumar Chakrabarti ... | 19-1 | First |
| | 33 | Sudhansubhushan Datta | 18-3 | First |
| | 34 | Pareschandra Chakrabarti . | 19-2 | First. |
| | 35 | Chintaharan Raybarman | 16 6 | Second. |
| | 37 | Manoranjan Raybarman | 16-6 | First |
| | 38 | Pareschandra Bhattacharyya .. | 17 11 | First |
| | 40 | Jogeschandra Bhattacharyya ... | 17 6 | Second. |
| | 41 | Purnachandra Bhattacharyya | 17-11 | Second |
| | 42 | Chandramohan Bhattacharyya ... | 17-5 | Third. |
| | 43 | Nareschandra Raybarman ... | 18-6 | Second. |
| | 44 | Nayeb Ali ... | 20-7 | Third |
| | 45 | Rahimuddin Ahammed | 17-10 | Second. |
| | | **Bangora Umalochan H. E. School.** | | |
| | 46 | Ahizaddin Ahmed ... | 19-4 | Second. |
| | 47 | Amoddin Ahmed ... | 17-1 | Second. |
| | 48 | Mahammed Ali ... | 18 11 | Second |
| | 49 | Azimuddin Ahammed | 21-3 | Second |
| | 50 | Kalinarayan Ray (I) ... | 17 3 | First |
| | 51 | Abinaschandra De ... | 19-4 | First. |
| | 52 | Lalitchandra Das ... | 17-1 | First. |
| | 53 | Surendrachandra Guha | 23-1 | Second |
| | 58 | Debendrachandra Nag | 18-1 | First. |
| | 59 | Sureschandra Rakshit | 17-5 | First |
| | 60 | Jatindramohan Ghosh | 16-1 | Third. |
| | 61 | Bijaykumar Bhattacharyya .. | 19-1 | Second |
| | | **Comilla Yusuff H. E. School.** | | |
| | 67 | Sachindrasundar Pal ... | 18-9 | First |
| | 68 | Kulendrachandra Bhattacharyya ... | 17-1 | Second |
| | 70 | Dineschandra Chakrabarti ... | 18-7 | First |
| | 72 | Nripendranath Datta ... | 16 1 | First |
| | 80 | Abdur Rahamon ... | 19-8 | Second. |
| | 81 | Kalim Ulla ... | 19-2 | Second. |
| | 84 | Serazul Islam, I ... | 16-7 | Third. |
| | 87 | Anu Miah ... | 18-2 | First |
| | 89 | Abdul Latiff Mir (M) ... | 18-7 | First. |

| Roll | No. | Name. | Age. | Division in which the candidate has passed. |
|---|---|---|---|---|
| | | **Comilla Victoria Collegiate School.** | | |
| Com. | 90 | Ahamed Ullah ... | 19 | Second. |
| | 91 | Sailendrachandra Bardhan ... | 18-1 | Second |
| | 92 | Kshetramohan Bhaumik | 18-2 | First. |
| | 93 | Bhupendranarayan Biswas .. | 22-2 | First |
| | 94 | Dhirendranarayan Basu | 18 6 | Second |
| | 95 | Rajkumar Chakrabarti (m) ... | 18-11 | First |
| | 96 | Sachindramohan Chakrabarti (m) ... | 16-6 | First |
| | *97 | Sukhadacharan Chattopadhyay (Mm) | 16 | First |
| | 100 | Anathbandhu Datta ... | 17-8 | Second |
| | 101 | Iswarchandra Datta (Mm) ... | 17 1 | First |
| | 102 | Jajneswar Deb (Mm) | 17 2 | First |
| | 105 | Bommadhab Majumdar (m) .. | 18-1 | First |
| | 106 | Harendrakumar Majumdar .. | 17-10 | First |
| | 107 | Sudhiranjan Mukhopadhyay (Mm) ... | 17 4 | First |
| | 109 | Girijamohan Ray (m) | 20 8 | First |
| | 110 | Lalmohan Ray . | 19 5 | First |
| | 111 | Upendrachandra Ray (V) ... | 17-2 | First |
| | 112 | Jogeschandra Raychaudhuri (Mm) | 16-4 | First |
| | 113 | Rajendralal Raychaudhuri ... | 17 6 | Second |
| | 114 | Sukumar Bhattacharyya . | 18 10 | Second |
| | 115 | Manoranjan Chakrabarti ... | 16 11 | First |
| | 116 | Tarunchandra Chakrabarti (V) ... | 18-1 | First |
| | 117 | Sitalchandra De ... | 18 4 | Third. |
| | 121 | Sukumar Nag ... | 16-1 | Second |
| | 122 | Anangamohan Pal .. | 19-11 | Second |
| | 123 | Prabodhchandra Ray .. | 20-1 | First |
| | 124 | Rasikranjan Biswas ... | 18-4 | First |
| | 125 | Binodbihari Deb ... | 17-2 | First |
| | 127 | Subodhkumar Gangopadhyay ... | 17-5 | Second |
| | 129 | Bishnucharan Mukhopadhyay .. | 18-5 | First |
| | 133 | Praphullakumar Raychaudhuri | 18-8 | Second |
| | 135 | Jogeschandra Pal .. | 20-7 | Second |
| | 136 | Abdul Hamid Bhuyan | 19-5 | Second |
| | 139 | Basharat Ali . | 18 3 | Second |
| | 140 | Burhanuddin Ahamed | 17-3 | Second |
| | 143 | Abdul Bari, II .. | 17 11 | Second |
| | 145 | Ashraf Ali ... | 18-2 | First |
| | 146 | Habibulla Miah ... | 18-8 | Second |
| | 147 | Jamaluddin Ahamed .. | 18-6 | First |
| | 149 | Khwaja Ali Hossain | 16-6 | Second. |
| | 150 | Mahamed Wahid ... | 17-4 | Second |
| | 151 | Mazibar Rahaman ... | 17-3 | Third. |
| | 152 | Md. Fazeluddin Mazumder ... | 18-6 | First. |
| | 153 | Md. Idris Khan ... | 22-1 | Second. |
| | 154 | Mohammod Rajjabali Bhuia ... | 20-8 | Second |
| | 155 | Muhammad Sukhawatullah (I) ... | 16-5 | First. |
| | 156 | Nazirudin Ahmed (Ll) . | 16 | First |
| | 157 | Abdul Majid Patwary | 17 1 | Second |
| | 161 | Syed Motaher Hossain Choudhary ... | 17-11 | Second |
| | 162 | Abdul Bari, I .. | 16-4 | First |
| | 165 | Amiruddin Ahmed ... | 19-2 | First |
| | 166 | Mahammed Abu Taher | 16-2 | Second. |
| | 167 | Md Dewan Miah (M) | 16-2 | First. |
| | 168 | Md. Nazibulla ... | 20-9 | Second. |

| Roll | No. | Name. | Age. | Division in which the candidate has passed. |
|---|---|---|---|---|
| | | **Comilla Iswar Pathsala.** | | |
| Com. | 169 | Binayendranath Bardhan (m) ... | 16-7 | First. |
| | 170 | Dhirendrachandra Bhattacharyya (m) | 17-3 | First |
| | 171 | Rohinikumar Bhattacharyya ... | 16-6 | First. |
| | 172 | Pareschandra Bhattacharyya (Mm) ... | 16-1 | First. |
| | 173 | Sureschandra Bhattacharyya (M) ... | 17 2 | First. |
| | *174 | Ajaykumar Bhattacharyya (MVm) .. | 16-1 | First. |
| | 175 | Anilchandra Chakrabarti (Mm) ... | 18-8 | Second |
| | 176 | Manindrakumar Bardhan ... | 16-1 | Second. |
| | 177 | Jyotirindra Chakrabarti | 18-11 | First |
| | | **Daudkandi H. E. School.** | | |
| | 179 | Agnikumar Nathbhaumik .. | 19-6 | Second |
| | 180 | Mahammed Abdul Gani (Mml) . | 17-1 | First |
| | 181 | Ramzuddin Ahmed . | 20-8 | First. |
| | 182 | Md Abdur Rahman, I | 16-2 | First |
| | 184 | Fayazal Hoque (MLm) | 17-6 | First |
| | | **Kasba H. E. School.** | | |
| | 190 | Jogendrachandra De . | 19-1 | Second |
| | 191 | Dineshbandhu Bhattacharyya .. | 18 10 | First |
| | 192 | Manindrachandra Chakrabarti .. | 16-4 | First |
| | 193 | Dhirendrachandra Ray (I) . | 18 2 | First |
| | 194 | Thakurchand Saha ... | 18 9 | Second |
| | 195 | Afsaruddin ... | 18 2 | Second |
| | 197 | Abdul Gani | 17-8 | First |
| | 198 | Habibur Rahman (Mm) | 16-2 | First |
| | 199 | Shirazal Islam | 18 5 | Second |
| | | **Ramchandrapur R. K. H. E. School.** | | |
| | 200 | Sureschandra Chakrabarti (Mml) .. | 17-4 | First |
| | 201 | Debendrachandra Acharyya .. | 18 | First |
| | 202 | Sachindramohan Brahma ... | 18-10 | First |
| | 203 | Premananda Mala ... | 16-3 | Second. |
| | 204 | Md Habibar Rahman | 19 2 | Second. |
| | 205 | Abdul Adud ... | 17-2 | Third. |
| | 207 | Jahurul Haque ... | 20-7 | Third |
| | 208 | Md. Samsuzzaman (M) | 16-6 | First. |
| | 209 | Md Serajul Islam ... | 17 8 | First |
| | | **Comilla Zilla School.** | | |
| | 210 | Jnanendramohan Bardhan (Mm) .. | 16-1 | First. |
| | 211 | Mahimchandra Banik | 17-7 | Second. |
| | 212 | Praphullachandra Bandyopadhyay (Mml) .. | 16 | First. |
| | 213 | Brajendranath Chattopadhyay (Mm) ... | 19-5 | First. |
| | 214 | Jatindramohan Dasgupta (m) . | 16-1 | First |
| | 215 | Amulyachandra Dattagupta (Mm) .. | 16-1 | First. |
| | 217 | Amalchandra Bandyopadhyay (MVm) ... | 16-2 | First. |
| | 218 | Niradananda Dasgupta (Mm) ... | 16 1 | First. |
| | 219 | Sitaprasad Batabyal ... | 16 5 | First. |

| Roll. | No. | Name. | Age | Division in which the candidate has passed. |
|---|---|---|---|---|
| | | **Comilla Zilla School**—*concld.* | | |
| Com. | 220 | Sachindranath Dasgupta ... | 16-4 | First |
| | 221 | Aminal Islam Chowdhury ... | 17-7 | First |
| | 222 | A. M. Abdul Wadood | 16-2 | First. |
| | 224 | Bazlur Rahman ... | 20 | Second |
| | 225 | Abdul Wadud ... | 16-1 | First |
| | 226 | Abdul Majid .. | 16-11 | First |
| | 227 | Afsaruddin (V) ... | 18-2 | Second |
| | 228 | Aminuddin Ahmed (L) | 17-2 | First |
| | 229 | Azizul Huque ... | 17 | Second |
| | 230 | Satyendrakrishna Dattaray (m) ... | 18-1 | First |
| | 232 | Sudhansumohan Ghosh (Mm) ... | 17-1 | First. |
| | 233 | Paresochandra Ray (M) | 18 | First |
| | 234 | Usharanjan Ray .. | 17-6 | First |
| | 235 | Binodbihari Saha ... | 17-5 | Second |
| | *236 | Amalendu Gupta (MinMc) ... | 16-4 | First. |
| | 237 | Desarajan Majumdar .. | 16-5 | First |
| | *238 | Binayendra Majumdar (MinMc) . | 17 | First |
| | 239 | Birendramohan Mitra (Mm) .. | 16-1 | First |
| | 240 | Pratibh sundar Pal (M) | 16-1 | First |
| | 241 | Asokkumar Ray (Min) | 16-6 | First |
| | *242 | Ranajitkumar Ray (EM LinMc) ... | 16-4 | First |
| | 243 | Sarojranjan Deb . | 17-2 | First |
| | 244 | Satyendramohan Ghosh | 18 3 | Second |
| | 245 | Panchugopal Ghosh .. | 18-10 | Third. |
| | 246 | Dhirendrachandra Majumdar .. | 17-9 | Second |
| | 249 | Sudhirchandra Ray .. | 17-4 | Second |
| | 250 | Nalinnath Sengupta .. | 17-1 | First |
| | 251 | Rameschandra Goswami (M) .. | 17-8 | First |
| | *252 | Sherkh Mahammad Patwary (MLVm) . | 16-2 | First |
| | 253 | Shamsul Huda (Mm) . | 16-2 | First |
| | 254 | Farhatuddin Ahmed ... | 17-1 | Second |
| | 255 | Khurshed Alam (L) ... | 16-2 | First. |
| | 256 | Mahammad Muktal Hussain ... | 20-1 | Second |
| | 257 | Shamsuddin Ahmed .. | 19 5 | First |
| | 258 | Tafazzal Hossain (M) | 16-2 | First |
| | 259 | Torab Ali ... | 19-1 | Second |
| | | **Comilla Iswar Pathsala.** | | |
| | 260 | Nibaranchandra Chakrabarti ... | 19-5 | First |
| | *262 | Sachindramohan Chakrabarti (Mm) ... | 17-7 | First |
| | 263 | Shashthicharan Chakrabarti (Mm) ... | 16-1 | First. |
| | 265 | Bireschandra Das ... | 16-5 | Second |
| | 266 | Ajitkumar Datta (M Vm) ... | 16 9 | First. |
| | 267 | Ramanimohan Datta ... | 16 10 | First. |
| | 268 | Jogendrachandra Majumdar ... | 16 | Second |
| | 269 | Parimalchandra Majumdar (Mm) ... | 16 2 | First. |
| | 270 | Rajendrachandra Majumdar (M) ... | 16-7 | First. |
| | 273 | Aswinikumar Pal ... | 16-7 | First. |
| | 274 | Suchintamohan Ray (Mm) ... | 16-3 | First. |
| | 275 | Jitendranath Sengupta | 16-5 | First |
| | 277 | Praphullaranjan Dasgupta (Mm) ... | 17-1 | First. |
| | 278 | Nalinikanta Lodh (Mm) | 16 11 | First. |
| | 279 | Hemendrakumar Sen (MmMc) ... | 16-8 | First. |

| Roll. | No. | Name. | Age | Division in which the candidate has passed |
|---|---|---|---|---|
| | | **Comilla Iswar Pathsala**—*concld.* | | |
| Com. | 280 | Pabitrakumar Sengupta (m) ... | 16 9 | First. |
| | 282 | Surendrachandra Chakrabarti .. | 16-11 | Second |
| | 283 | Sureschandra Chakrabarti (M) ... | 17-1 | Second. |
| | 285 | Jogeschandra Datta ... | 18-1 | Second. |
| | 286 | Herambakumar Guharay (M) ... | 16-3 | First. |
| | 287 | Pramodranjan Gupta (M) ... | 16 | First |
| | 289 | Harihar Majumdar . | 18-4 | Second |
| | 291 | Nagendrachandra Majumdar ... | 18 9 | Second |
| | 292 | Nripendrachandra Majumdar . | 18-7 | Second. |
| | 293 | Sudhirranjan Mukhopadhyay . | 17-1 | Second |
| | 294 | Harendrabinod Ray . | 18 2 | First |
| | 295 | Hemendrachandra Ray | 17-11 | Second |
| | 296 | Prabodhchandra Ray ... | 16-2 | First |
| | 297 | Radhasyam Saha .. | 17-2 | Third |
| | | **Elliotganj R. B. H. E. School.** | | |
| | 299 | Kedareswar Chaudhuri (Mm) .. | 16 3 | First. |
| | | **Jahapur Kamalakanta Academy.** | | |
| | 303 | Upendrachandra Saha | 20-3 | Second |
| | 304 | Biswambhar Saha . | 18 1 | Second |
| | 305 | Nibaranchandra De .. | 23 6 | Third |
| | 311 | Muhammed Abdul Gani | 18-5 | First |
| | | **Ibrahimpur King George Institution.** | | |
| | 313 | Rabindranath Ray . | 17-9 | First |
| | 314 | Upendrachandra Bhattacharyya . | 17-10 | Second. |
| | | **Nabinagar H. E. School.** | | |
| | 321 | Rebatimohan Banik . | 20-4 | Third |
| | 322 | Akshaychandra Bhattacharyya (MLm) ... | 17-4 | First |
| | 323 | Surendralal Biswas ... | 18-2 | First |
| | 324 | Surendramohan Chaudhuri ... | 17 2 | Second. |
| | 325 | Haridas Deb (m) ... | 17-3 | First |
| | 326 | Gaurchandra Mallabarman ... | 16-9 | First |
| | 327 | Birendrachandra Naha | 20-1 | Second |
| | 328 | Amareschandra Nandi (V) .. | 16-4 | First. |
| | 333 | Dhirendralal Das .. | 16 | First |
| | 335 | Madanmohan Sarma ... | 16-7 | Third |
| | 337 | Muhammad Mutiur Rahman ... | 17 | Second |
| | 338 | Sufi Muhammad Saeidul Islam .. | 17-2 | Second. |
| | 339 | Khurshidur Rahman ... | 22 5 | Third. |
| | 341 | Abdul Karim ... | 16-2 | Second |
| | 343 | Abdus Samed ... | 18-1 | First. |
| | 344 | Moyzuddin Ahammad | 16-11 | First. |
| | 347 | Mahammad Hossain . | 17-8 | First |
| | 348 | Tafazzal Hussain ... | 16-2 | First |
| | 350 | Fazlul Karim .. | 16 1 | First |
| | 352 | Mahbub Ali Khan (M) | 17 | First |
| | | **Sachar H. E. School.** | | |
| | 354 | Dhirendrachandra Sen-Chaudhuri (M) ... | 16-1 | First |
| | 356 | Brajendrakisor Das .. | 19-9 | Second |
| | 358 | Ramanimohan Dhar ... | 19-1 | First. |

| Roll | No | Name. | Age | Division in which the candidate has passed |
|---|---|---|---|---|
| | | **Sachar H. E. School**—*concld.* | | |
| Com. | 359 | Sudhirbandhu Dasgupta ... | 17-3 | First |
| | 362 | Rojjobali Miah . | 19 | Second |
| | 363 | Abdul Hashim Shah .. | 20 | Second |
| | 364 | Abdur Rahim Miah .. | 23-4 | Second |
| | | **Paschimgaon B. N. H. E. School.** | | |
| | 376 | Khorshed Ahamed ... | 17 | Second |
| | | **Debagram H. E. School.** | | |
| | 377 | Purnasasi Banik (M) . | 17-6 | First |
| | 378 | Khagendrakumar Bhattacharyya | 17 2 | First |
| | 379 | Kshitischandra Datta (Mm) ... | 17 1 | First |
| | 388 | Syed Sadater Rahaman | 17-5 | Third |
| | | **Comilla Iswar Pathsala.** | | |
| | 389 | Dewan Mohiuddin Haider ... | 19-4 | First |
| | | **Comilla Victoria Collegiate School.** | | |
| | 390 | Wazed Ali ... | 16-4 | First |
| | | **Raipur K. C. H. E. School.** | | |
| | 391 | Harendrachandra Mallabarman ... | 16-1 | First |
| | 392 | Abineschandra Pal .. | 16-11 | First |
| | 393 | Jagatchandra Sil .. | 18 | First |
| | 394 | Dhirendrachandra Chaudhuri ... | 17-6 | Second |
| | 395 | Anathbandhu Chaudhuri ... | 17-2 | Second. |
| | 398 | Ramanath Ray ... | 17 5 | Second |
| | 401 | Kafiluddin Ahmed (L) | 16-1 | First |
| | 402 | Rostom Ali (L) .. | 16-5 | First |
| | | **Cheora F. H. E. School.** | | |
| | 405 | Basantakumar Saha ... | 16 | First |
| | 407 | Binodbihari Chakrabarti ... | 16-11 | Second |
| | 4 2 | Muhamed Wahulla Bhuyna (L) ... | 16 10 | First |
| | 413 | Quadi Shamsuddin Ahmed ... | 17 5 | First |
| | 414 | Quadi Mahzuddin Ahamed (L) ... | 16-1 | First |
| | 416 | Kazi Mohamed Aslan | 17-6 | Second. |
| | 417 | Abdur Rashid (l) ... | 16-6 | First |
| | 419 | Nuruzzaman (Ll) ... | 19-5 | First |
| | 420 | Ali Ahmed Majumdar (l) .. | 17-10 | First |
| | 421 | Ramizuddin Ahamed ... | 19-11 | Second |
| | 422 | Quadi Emdadul Hoque | 16 | First |
| | 423 | Tajal Islam ... | 19-6 | First |
| | | **Batisa Krishnakumar H. E. School.** | | |
| | 425 | Surendrachandra Chakrabarti .. | 20-4 | Second |
| | 426 | Niradbaran Sengupta ... | 16-2 | First |
| | 430 | Manomohan Datta ... | 17 | Second |
| | 431 | Rameschandra Sengupta, I ... | 17-2 | Second. |
| | 433 | Bhupendrachandra Gupta ... | 17-3 | Second |
| | 434 | Rameschandra Sengupta, II ... | 20-7 | Third |
| | 435 | Anangamohan Sengupta, I ... | 18-11 | Second |
| | 436 | Kumudbihari Sengupta | 17-2 | First |
| | 437 | Ali Nawab (l) ... | 16-1 | First |
| | 439 | Ali Ahamed, I ... | 16-5 | First |
| | 440 | Hossainer Rahaman ... | 18-6 | Second. |
| | 441 | Ali Ahamed, II ... | 17-8 | Second. |

| Roll. | No. | Name | Age. | Division in which the candidate has passed. |
|---|---|---|---|---|
| | | **Ellotganj R. B. High School.** | | |
| Com. | 442 | Hiralal Chakrabarti ... | 16-1 | Third |
| | 444 | Niharranjan Kar ... | 16 4 | First |
| | *445 | Nalinikumar Majumdar (Mlul) ... | 16 2 | First |
| | 446 | Rameschandra Ray ... | 16 | First. |
| | *451 | Tafazzal Hossain (Mlul) ... | 17-3 | First |
| | 452 | Alphazuddin Miah ... | 16-9 | First |
| | 457 | Wahed Ali Miah ... | 22-6 | Second. |
| | | **Devidwar Rezuddin H. E. School.** | | |
| | 458 | Fazlur Rahman (MLVl) .. | 16-2 | First. |
| | 459 | Keramat Ali ... | 16-7 | First |
| | 460 | Abdul Aziz Bhuia ... | 20-11 | Second |
| | 461 | Haidher Ali ... | 22-1 | Second |
| | 463 | Atulchandra Datta .. | 20-2 | Second |
| | 465 | Sachindramohan Karmakar ... | 21-9 | First |
| | 466 | Anandachandra Sutradhar ... | 20-2 | First |
| | | **Barkanta H. E. School.** | | |
| | 469 | Bipinbihari Dhar ... | 22-2 | Second |
| | 471 | Chintaharan Ray (m) | 18-2 | Second |
| | 472 | Gaurchandra Sarma (Mm) ... | 17-4 | First. |
| | 473 | Mohinimohan Bandyopadhyay .. | 17-8 | Second |
| | 478 | Abdur Rohaman ... | 20-7 | Second |
| | 479 | Azizor Rahaman ... | 16-1 | First |
| | 480 | Moynul Hosain .. | 18-9 | Second |
| | 481 | Abdul Jobbar ... | 18 1 | First |
| | | **Cheora F. H. E. School.** | | |
| | 482 | Aman Ali ... | 17-9 | First. |
| | 483 | Rakib Uddin Ahmed .. | 16-4 | First |
| | 484 | Ahamed Ulla ... | 16-3 | First |
| | 485 | Lutful Karim ... | 17-1 | First |
| | 486 | Siddiquer Rahaman .. | 18-10 | Second |
| | 487 | Kazi Nurul Ahmed ... | 16 | Second |
| | | **Ramchandrapur R. K. H. E. School.** | | |
| | 488 | Rameschandra Chakrabarti (M) | 19-11 | First |
| | | **Cheora F. H. E. School.** | | |
| | 489 | Amir Hossain ... | 20-2 | Second. |
| | | **Batisa Krishnakumar H. E. School.** | | |
| | 490 | Nibaranchandra Majumdar ... | 17-2 | Third |
| | | **Jahapur K. K. Academy.** | | |
| | 491 | Abdul Jabbar ... | | Second |
| | | **Syamagram Mohinikisher H. E. School.** | | |
| | 492 | Manomohan Acharyya (m) ... | 16-11 | First |
| | 494 | Harimohan Chaudhuri (Mlm) ... | 16-1 | First |
| | 495 | Brajabihari Chakrabarti (m) ... | 19-2 | First. |
| | 497 | Pareschandra Ghatak (m) ... | 18-3 | First |
| | 498 | Rahidas Saha ... | 16-10 | Second |
| | 499 | Manomohan Saha (M) | 20-8 | First. |
| | 500 | Harimohan Saha ... | 16-4 | Second |
| | 501 | Hemantakumar Bhattacharyya ... | 17-8 | Second. |

| Roll. | No. | Name. | Age. | Division in which the candidate has passed |
|---|---|---|---|---|
| | | **Syamagram Mohinitchar H. E. School**—*concld* | | |
| Com. | 503 | Praphullakumar Chakrabarti ... | 17-3 | Second |
| | 510 | Abdul Mannaff ... | 17-1 | Second |
| | 511 | Abdul Latiff ... | 17-10 | Second |
| | 514 | Mazu Mia (M) ... | 18-2 | First |
| | 516 | Obayed Ullah .. | 17-2 | Second |
| | | **Comilla Iswar Pathsala.** | | |
| | 517 | Prasantakumar Sen ... | 16-1 | First |
| | | **Nabinagar H. E School.** | | |
| | 518 | Manindranath Gupta ... | 16-2 | First |
| | | **Laimanirhat H. E. School.** | | |
| | 523 | Sudhansuranjan Dasgupta (Mm) ... | 17-3 | First |
| | | **Female Private Student.** | | |
| Com. F. P. | 1 | Ilakona Dasgupta ... | . | First |
| | | **Private Students.** | | |
| Com. P. | 1 | Binodbihari Gupta ... | 16-11 | Second |
| | 2 | Serajuddin Ahamed ... | 17-1 | First |
| | 3 | Lutifar Rahman ... | 17-3 | Third |
| | 4 | Bhaboschandra Dasgupta ... | 18-3 | Second |
| | 6 | Jagatbandhu Sutradhar | 17-10 | Second |
| | 7 | Farid Uddin Ahamed | 18-7 | First |
| | 8 | Md Abdur Rahman ... | 18-11 | First |
| | 9 | Annadacharan Chakrabarti ... | 18 8 | Second |
| | | **Saida Gangadhar Academy.** | | |
| Cont. | | Rajendranath Sen ... | 17-7 | Second |
| | | Gajendranath Mandal | 20-5 | Third |
| | | Jaminikanta Das ... | 16-1 | First |
| | | Janakiballabh Adhikari (Mm) .. | 17 | First. |
| | 5 | Nabinchandra Mandal | 19-5 | Second |
| | 6 | Himansusekhar Misra | 17-9 | Second |
| | 7 | Nalinbihari Das ... | 17-4 | Second |
| | 8 | Sambhushan Das ... | 19 | First |
| | 9 | Jagannath Maiti (M) | 18-4 | First |
| | 10 | Ramnarayan Patra ... | 20-3 | Third |
| | 11 | Bhutnath Bandyopadhyay ... | 19-5 | Second |
| | 12 | Amulyaratan Basu .. | 19-5 | First |
| | 13 | Jogendranath Jana ... | 18 | First. |
| | 14 | Kedarnath Das ... | 19-9 | Third |
| | 15 | Nalinbihari Pati ... | 18-11 | Second |
| | 17 | Gobindachandra Satpathi (V) ... | 20 4 | First |
| | 18 | Somnath Das ... | 18-9 | Second. |
| | 19 | Kailaschandra Datta ... | 19-1 | Second |
| | 20 | Gokulbihari Das ... | 17 2 | Second. |
| | 21 | Brindaban Mahapatra | 22-3 | Second |
| | 22 | Jayram Das (V) .. | 18-10 | Second |
| | 23 | Kamallochan Sahu (V) | 19 | First. |
| | 25 | Baikunthanath Das ... | 18-8 | Second |
| | 26 | Gokulananda Mahanti | 19-5 | Second |
| | | **Haria S. P. Institution.** | | |
| | 28 | Sricharan Aguan ... | 20-7 | Third |
| | 31 | Kartikchandra Maiti ... | 20-5 | First |
| | 32 | Bhutnath Maiti ... | 16-6 | First |

| Roll. | No. | Name. | Age. | Division in which the candidate has passed. |
|---|---|---|---|---|
| | | **Contai H. E. School.** | | |
| Cont. | 33 | Amiyakumar Maiti (m) | 16-6 | First. |
| | 34 | Bhimacharan Pradhan (Lm) ... | 17-2 | First. |
| | 35 | Bhabasankar Tunga (MLm) ... | 18-4 | First |
| | 36 | Debendranath Sen (Mm) ... | 16-5 | First |
| | 38 | Maheswar Das (MLml) | 17-10 | First |
| | 39 | Mahendranath Das ... | 22-5 | Second. |
| | 40 | Pareschandra Chattopadhyay (Mm) ... | 16 3 | First |
| | 41 | Prasannakumar Jana ... | 24-11 | Second |
| | 42 | Amarendrakumar Jana (m) .. | 18-1 | First. |
| | 43 | Binodbihari Das ... | 16-8 | Second |
| | 44 | Binaykumar Bandyopadhyay ... | 16-10 | First |
| | 46 | Saradindu Das ... | 16-5 | First. |
| | 47 | Srischandra Mal (mG) | 17-4 | First |
| | 48 | Satischandra Maiti ... | 18-6 | Second |
| | 49 | Bhupendrakumar Panda ... | 16-1 | First |
| | 52 | Bhabatosh Chattopadhyay .. | 16-1 | First |
| | 53 | Bijaykumar Basu ... | 16 | First |
| | 54 | Satischandra Bera ... | 16-11 | Second. |
| | 55 | Rohinikumar Giri ... | 18-4 | Second. |
| | | **Bahiri Bradley-Birt H. E. School.** | | |
| | 56 | Bijaykrishna Basu (m) | 17-4 | Second |
| | 57 | Umeschandra Charan | 19 3 | Third |
| | 58 | Lakshminarayan Ghosh (m) . | 16 9 | Second |
| | 60 | Barendranath Jana ... | 17-1 | Third. |
| | 61 | Jhatucharan Maiti (m) | 18-1 | First |
| | 62 | Basantakumar Misra .. | 21-5 | Third |
| | 64 | Rabindrakumar Sahu (m) ... | 16 8 | First. |
| | 65 | Barendrakumar Sahu (m) .. | 17-10 | Third |
| | 69 | Praphullakumar Ghoshal .. | 17-10 | First. |
| | 70 | Hemantakumar Mahapatra . | 18-10 | Third |
| | 71 | Santoshkumar Sasmal | 17-4 | Second |
| | | **Haludbari H. E. School.** | | |
| | 75 | Bhubanchandra Panda | 17-2 | Second. |
| | | **Contai Model Institution.** | | |
| | *76 | Sailajaprasanna Acharyya (MLVm) | 18-11 | First. |
| | 77 | Arunchandra Bera ... | 18-1 | Second |
| | 79 | Pareschandra Ghosh (m) ... | 18 6 | First |
| | 80 | Raghunath Giri ... | 18-11 | Third |
| | 81 | Saratchandra Jana (M) | 16-11 | First. |
| | 83 | Madhusudan Maiti ... | 19-3 | Second |
| | 84 | Jogendranath Maiti ... | 18-6 | Second |
| | 85 | Saratchandra Mal .. | 17-7 | Second |
| | 88 | Rajkrishna Panda (m) | 18-11 | Second |
| | *90 | Bipinbihari Pradhan (MLVm) ... | 17-3 | First |
| | 92 | Sudhansusekhar Bhattacharyya ... | 17-5 | First. |
| | 93 | Bankimchandra Das ... | 19-7 | Third |
| | 94 | Premchand Jana ... | 19-8 | Second |
| | 97 | Bimalchandra Majumdar ... | 16-1 | Second. |
| | 100 | Pareschandra Das ... | 19-7 | Third. |

| Roll | No. | Name. | Age. | Division in which the candidate has passed |
|---|---|---|---|---|
| | | **Rugberia Gangadhar H. E. School.** | | |
| Cont. | 106 | Arunchandra De (Mm) | 18 11 | First. |
| | 108 | Bhutnath Maiti ... | 19 | First. |
| | 110 | Bhushanchandra Tripathi ... | 19-9 | First |
| | 111 | Gunadhar Sasmal .. | 20 | Second. |
| | 113 | Kusadhwaj Patra (m) | 20 | First |
| | 115 | Kshudiram Das .. | 18-5 | Second |
| | 119 | Priyanath Mandal ... | 19-8 | Second |
| | 120 | Purnachandra Tripathi | 17 9 | Third |
| | 122 | Ramnarayan Tripathi (m) ... | 16-6 | First |
| | 123 | Sarbeswar Tripathi (Mm) ... | 17 5 | Second |
| | 124 | Srinibas Sahu (Mm) ... | 19 | First |
| | 126 | Gobindaprasad Maiti | 17 | Second |
| | | **Basantia H. E. School.** | | |
| | 129 | Sashibhushan Mandal | 16-11 | Second |
| | 130 | Dwijendranath Raut ... | 23-3 | Third |
| | | **Contai Model Institution.** | | |
| | 132 | Apraticharan Bhunia | 19 4 | Third |
| | | **Jenkins School, Cooch-Behar.** | | |
| Coo. | 1 | Kumar Bipindranarayan (MLml) ... | 18-11 | First |
| | 2 | Satyanarayan Ojha (M) | 17-2 | First |
| | 3 | Nanigopal Adhikari (Mm) ... | 20 | First |
| | 4 | Ajitnath Chakrabarti (m) .. .. | 16 1 | First |
| | 5 | Purnendunath Bhattacharyya (m) .. | 17-8 | First |
| | 6 | Adityanath Gangopadhyay (Mm) ... | 16 2 | First. |
| | 7 | Pratulchandra Majumdar (m) ... | 16 | First |
| | 8 | Nalinikanta Chakrabarti (Mm) ... | 16-11 | First |
| | 9 | Rajendranath Saha (Mm) ... | 17-11 | First |
| | 10 | Nripendrakumar Chakrabarti ... | 19 | Third |
| | 11 | Srikrishnaprasanna Raymuhuri ... | 16-4 | First |
| | 12 | Dhirendrakumar Chanda (m) .. | 21 | Second |
| | 13 | Promodranjan Dasgupta (Mm) ... | 17 | First. |
| | 14 | Nripendrachandra Ray-Chaudhuri (m) ... | 16 2 | First |
| | 15 | Nalinmohan De (Mm) | 16 6 | First |
| | 16 | Tattweschandra Datta | 22 | First |
| | 17 | Nripendrakumar Bhattacharyya (MmG) ... | 18 | First |
| | 18 | Sarojkumar Ray (m) ... | 19-3 | First |
| | 19 | Praphullachandra Saha | 19-8 | Second |
| | 20 | Baradasankar Bagchi | 16 3 | First |
| | 21 | Sitesnarayan Biswas ... | 17-7 | Second |
| | 22 | Sunilprasad Ray ... | 18-5 | Second |
| | 23 | Jogeschandra Sarkar | 19-10 | Second |
| | 24 | Saileschandra Sengupta | 16-10 | First |
| | 25 | Prasannakumar Bhaumik ... | 22-1 | Second |
| | 26 | Jitendrakumar Ray (m) | 19-2 | First |
| | 27 | Manomohan Chaudhuri (Mm) ... | 19-1 | First. |
| | 28 | Bhabendranath Sarkar | 18-6 | Second. |
| | 29 | Bhabendranath Bhattacharyya (m) ... | 18-2 | First |
| | 30 | Chandranath Tewari (mMc) ... | 17 | First |
| | 31 | Tikendranath Chakrabarti ... | 17-3 | Second |

| Roll. | No. | Name | Age. | Division in which the candidate has passed. |
|---|---|---|---|---|
| | | **Jenkins School, Cooch-Behar**—*contd.* | | |
| Coo. | 32 | Manmathanath Dasgupta ... | 18-1 | First |
| | 33 | Suddhananda Ray ... | 16-1 | Second |
| | 34 | Dwijendranath Maitra | 17-7 | Second. |
| | 35 | Indubhushan Mukhopadhyay ... | 19-7 | Third |
| | 36 | Anilkumar Basu ... | 16 | Second |
| | 37 | Nalinranjan Dhar .. | 17-10 | Second |
| | 38 | Madanmohan Das ... | 20 2 | Third. |
| | 39 | Bankimchandra Niyogi | 18-11 | Second. |
| | | **Mathabhanga H. E. School.** | | |
| | 41 | Muhammad Shamsher Ali (Mml) ... | 16-1 | First |
| | 42 | Surendranarayan Raydaphadar ... | 20-6 | First. |
| | 43 | Debnarayan Dhar (Mm) | 19-2 | First |
| | 44 | Deonand Singh .. | 16 | First |
| | 45 | Pabitrakumar Chakrabarti (Mm) ... | 16-2 | First. |
| | 46 | Jagadindraprasad Mitra | 18 | First |
| | 47 | Abinaschandra Das .. | 19 | Second. |
| | 50 | Narendranath Bandyopadhyay ... | 19-11 | Second. |
| | 51 | Pradyotkumar Ghosh | 18 8 | Third |
| | | **Bagribari H. N. Seminary.** | | |
| | 53 | Sripati Sarma ... | 17-8 | First. |
| | 54 | Phanindranarayan Barman ... | 17-11 | Second |
| | 55 | Kaminikumar Ray ... | 16 | First |
| | 56 | Manindralal Saha ... | 18-4 | Second |
| | 57 | Sudhirkumar Mitra ... | 20 4 | Third |
| | | **Jenkins School, Cooch-Behar.** | | |
| | 58 | Bokhtiar Uddin Ahamed ... | 18-10 | Third |
| | | **Tufanganj N. N. M. H. E. School.** | | |
| | 59 | Praphullachandra Samaddar ... | 16-6 | First. |
| | 61 | Nilkanta Barma ... | 18 | Second |
| | 62 | Nalinikanta Chakrabarti ... | 16 9 | Second |
| | | **Dinhata H. E. School.** | | |
| | 64 | Rohinikanta Barmadhikari (M) ... | 19 | First |
| | 65 | Dhirendranath Chattopadhyay ... | 16-1 | First. |
| | 66 | Jyotischandra Das (Mm) ... | 17-6 | First. |
| | 67 | Balahari Majumdar ... | 18-7 | First. |
| | 68 | Bijayananda Ray ... | 23-6 | Second |
| | 69 | Srichand Seraogi (Mm) | 16 6 | First. |
| | 70 | Manmathanath Guhaniyogi (MmG) ... | 17 4 | First. |
| | 72 | Manindranath Basu ... | 17 | Third. |
| | 73 | Birendranath Chaudhuri ... | 16-5 | First. |
| | 74 | Binaybhushan Majumdar ... | 21 7 | Second |
| | 75 | Umapada Datta ... | 19-6 | First. |
| | 76 | Jatindramohan Gangopadhyay ... | 18-5 | Second. |
| | 77 | Pramathanath Ghosh ... | 17 | Second. |
| | 79 | Sawarath Singha ... | 22-9 | Second. |
| | 81 | Jaminikumar Biswas ... | 18-2 | Second. |
| | 82 | Jitendramohan Basu ... | 17-3 | First. |
| | 83 | Shabaj Uddin Ahamed | 21-9 | Second |
| | 84 | Jabiruddin Ahamed ... | 19-3 | Second. |

| Roll. | No. | Name. | Age. | Division in which the candidate has passed |
|---|---|---|---|---|
| | | **Mekliganj H. E. School.** | | |
| Coo. | 85 | Rajendranath Barman | 16 | Second |
| | 86 | Nareschandra De ... | 16-5 | First. |
| | 89 | Bijaykumar Sen ... | 18-8 | Second |
| | 90 | Biharikanta Barma ... | 20 | First |
| | 91 | Abanimohan Chandaray | 17-7 | Second |
| | 93 | Bibhutibhushan Sarkar | 18-11 | Third |
| | 94 | Birendranath Sengupta | 21 | Third. |
| | 96 | Tahiruddin Ahamed ... | 17-5 | First |
| | | **Alipur Duar H. E. School.** | | |
| | 98 | Sudhirkumar Bhaumik | 17 | First |
| | 99 | Ahibhushan Chattopadhyay ... | 18-4 | Second. |
| | 101 | Nagendrachandra Mukhopadhyay ... | 16-2 | Second |
| | 102 | Moharak Hossain Ahammed ... | 20 5 | Second |
| | | **Private Student.** | | |
| Coo. P. | 6 | Priyasankar Bagchi ... | 19-1 | Second. |
| | | **Darjeeling High School.** | | |
| Dar. | 1 | Surapati Bhattacharyya (Min) ... | 17-1 | First |
| | 2 | Amiyanath Bandyopadhyay (V) ... | 17 1 | First. |
| | 3 | Pratapendranath Ghosh | 18 11 | First. |
| | 4 | Dhirendranath Mukhopadhyay ... | 21-2 | First |
| | 5 | Harinandan Sinha (m) | 17-1 | First |
| | 6 | Jagannath Sinha (m) | 20 | First |
| | 7 | Pemba Tsering (Min) | 17-9 | First |
| | 8 | Mantu Singh Rai (L) | 17-11 | First |
| | 9 | Narjit Rai (Min) ... | 17-5 | First |
| | 10 | Bhup Bahadur Singh (Lim) .. | 17 9 | First |
| | 11 | Dhansingh Chhetri ... | 21 | Second |
| | 12 | Kashiraj Prodhan ... | 17 | Second |
| | 13 | Anania Pradhan ... | 17-2 | Second |
| | 14 | Padambahadur Thappa | 20-10 | Second |
| | 15 | Abdul Ahad (L) .. | 16-1 | First |
| | 16 | Md. Mustafa (L) ... | 17-11 | First |
| | 17 | Tsheten Wangyal .. | 21-10 | Second |
| | | **Kalimpong Scottish Universities Mission High School.** | | |
| | 18 | Phup-Thinley | 20 | Second |
| | 19 | Pingyuck (m) .. | 18-2 | First |
| | 20 | Birbahadur Kumai (Min) | 17-7 | First |
| | 21 | Krishnabahadur Gurung (Min) | 17-8 | First |
| | 22 | Pem Tsering (m) | 18-6 | Second |
| | | **Maharani School, Darjeeling.** | | |
| Dar. F. | 1 | Lilabati Sarkar ... ... | | First. |
| | 2 | Pemchhiden Pelger ... . | | First |
| | | **Private Students.** | | |
| Dar. P. | 1 | Safiuddin Ahamed, II... | 18-9 | Second. |
| | 2 | Raghunathprasad Sinha | 20-10 | Second |
| | | **Sujapur H. E. School.** | | |
| Din. | 1 | Gurupada Ghosh ... | 18-2 | Second |
| | 2 | Kaliprasanna Chaudhuri ... | 18-1 | First |
| | 3 | Kumudnath Ghosh ... | 18-11 | First |
| | 7 | Piruli Mohammad Mandal ... | 17-4 | Second |
| | 8 | Ibrahimuddin Sarkar ... | 18-11 | Second. |
| | | **Pirganj H. E. School.** | | |
| Din. | 9 | Lalitmohan Goswami | 17-9 | First. |
| | 10 | Girijanath Ghosh ... | 17-7 | Third |
| | 11 | Naroschandra Chakrabarti ... | 17-3 | Second |
| | 12 | Kamalakanta Jha ... | 18-2 | Second |
| | 14 | Mahammad Danesh ... | 16-10 | First |
| | 20 | Mohammad Fazlul Karim ... | 20-2 | Second |
| | | **Dinajpur Town H. E. School.** | | |
| | 22 | Ajodhya Prasad ... | 19-3 | Second |
| | 24 | Debendranath Das ... | 18-10 | Second |
| | 33 | Bamacharan Bhattacharyya ... | 17-3 | Second. |
| | 34 | Sudhirkumar Chaudhuri .. | 18-11 | Second |
| | | **Ramganj B. N. Institution.** | | |
| | 58 | Ahamed Tamizuddin ... | 18-3 | First |
| | 59 | Ambikacharan Ghosh... | 19-8 | Second |
| | 60 | Bijoyanand Ray (m) ... | 17-6 | First |
| | 62 | Rakhalchandra Basak . | 22-5 | Second |
| | 63 | Parmanand Jha ... | 17-4 | Second |
| | | **Balurghat H. E. School.** | | |
| | 64 | Purnachandra Ghosh... | 17 5 | Second |
| | 65 | Nalinbhushan Sarkar... | 16 6 | First |
| | 66 | Baharah Biswas ... | 20-1 | Second |
| | 67 | Kumudbihari Chattopadhyay (MinMc) ... | 16-4 | First |
| | 68 | Sachindrachandra Bandyopadhyay ... | 19-6 | Second |
| | 69 | Amulyachandra Basu... | 16-2 | First. |
| | 70 | Nibaranchandra Baral | 17-8 | First |
| | 71 | Nanigopal Basu ... | 19 3 | Second |
| | 72 | Gunendrachandra Chakrabarti ... | 20-10 | Second. |
| | 74 | Binodbihari Ghosh ... | 18-8 | First |
| | 75 | Sachindranath Ghosh... | 16-3 | Third |
| | 77 | Debendranath Ghosh .. | 20-11 | Third |
| | 78 | Jahiruddin Sarkar ... | 16-6 | Second |
| | 79 | Samiruddin Sarkar ... | 18-4 | Second. |
| | 80 | Tayab Amir Ali ... | 16-6 | First |
| | | **Dinajpur Zilla School.** | | |
| | 81 | Mohammed Azizar Rahman ... | 16-10 | First. |
| | 83 | Muhammad Delawar Hossain ... | 18-6 | Second |
| | 85 | Md Fazar Rahman ... | 17-2 | First |
| | 89 | Sureschandra Som ... | 20 5 | Third |
| | 90 | Pratapnath Ray ... | 17-8 | Second |
| | 91 | Radhikaranjan Ray ... | 16 11 | Second |
| | 93 | Birendranarayan Ray | 19 3 | First |
| | 94 | Jagadischandra Ray ... | 20-9 | Third |
| | 96 | Prabhaschandra Sinha (Min) ... | 16 2 | First |
| | 97 | Manindranarayan Misra | 19-3 | Second |
| | 99 | Gopeschandra Ray ... | 16 11 | Second |
| | 100 | Nirendranath Ray ... | 19-6 | First |
| | 102 | Sudhirchandra Ray ... | 20-7 | Second |
| | 103 | Udaychandra Raychaudhuri . | 17-5 | Third |
| | 106 | Pradyotkumar Ray ... | 17-1 | Second |
| | 107 | Purnachandra Raychaudhuri ... | 19-3 | Second. |
| | 108 | Anathbandhu Saha ... | 19-2 | Second |
| | 109 | Rameschandra Saha ... | 19-11 | Second |
| | 110 | Radhikagobinda Sarkar | 16-1 | Second |
| | 112 | Khan Ahasan Ali ... | 18-7 | First |
| | 113 | Md. Abdul Hamid ... | 16-7 | First |
| | 116 | Mohammed Ayub ... | 18-6 | Second. |
| | 120 | Krishnachandra Das ... | 17-10 | Second. |

| Roll. | No. | Name. | Age | Division in which the candidate has passed |
|---|---|---|---|---|
| | | **Dinajpur Zilla School**—*concld* | | |
| Din. | 121 | Nalinimohan Debray | 17-1 | Second. |
| | 122 | Jaysudhanya Das ... | 17-9 | Second |
| | 123 | Tarapada Das .. | 16-2 | First |
| | 124 | Manmathanath Ghosh | 17-10 | Third. |
| | 127 | Pradyotkumar Das (M) | 18-11 | First |
| | 132 | Amiyagopal Ghosh ... | 17-2 | Second |
| | 137 | Rudrananda Chaudhuri | 17 | Third |
| | 142 | Dineschandra Bhattacharyya ... | 16-4 | Second. |
| | 144 | Debiprasad Bandyopadhyay ... | 17-1 | First |
| | 151 | Susilchandra Chakrabarti ... | 18-3 | Second. |
| | 152 | Ramaniranjan Bandyopadhyay (Mm) ... | 17-2 | First |
| | 153 | Pratulchandra Basu ... | 17-2 | Second |
| | 154 | Sudhirkumar Bhadra ... | 16-2 | Second. |
| | 155 | Ajitkumar Chakrabarti | 16-5 | First |
| | 156 | Amalendu Chakrabarti (Mm) .. | 16-1 | First. |
| | 157 | Pratulchandra Bandyopadhyay ... | 18-11 | Second. |
| | 158 | Anangamohan Chandra | 18-3 | First |
| | 159 | Rahimuddin Ahmed ... | 20-1 | Second. |
| | 163 | Abul Khair Mahammad Delwar Hossain ... | 17 1 | First |
| | 164 | Sabur Ahamed ... | 20-5 | Second |
| | 165 | Fariduddin Ahamed .. | 16-1 | First. |
| | 166 | Kalimuddin Ahamed ... | 18 10 | Second |
| | | **Raiganj Coronation H. E. School.** | | |
| | 167 | Birendranath Ghosh (Mm) ... | 19 4 | First. |
| | 168 | Srikrishna Mukhopadhyay (Mm) ... | 16 11 | First |
| | 169 | Sasankakumar Ray ... | 16-4 | First |
| | 170 | Manindranarayan Dhar | 20 | Second |
| | 171 | Sarasikumar Bandyopadhyay . | 16-7 | First |
| | 172 | Nagendranath Das ... | 16-3 | Second |
| | 173 | Sureschandra Ghosh ... | 18 | Second |
| | 174 | Bhubanmohan Saha ... | 17 8 | Second |
| | 175 | Priyagopal Saha ... | 19 | Second |
| | | **Dinajpur Maharaja Girijanath High School.** | | |
| | 178 | Hirendrachandra Bhattacharyya ... | 19-3 | Second |
| | 179 | Tarendracharan Bhattacharyya (Mm) ... | 16 10 | First |
| | 180 | Khagendranath Biswas (m) ... | 16-3 | Second |
| | 181 | Kshirodranjan Chattopadhyay (Mm) ... | 16-2 | First |
| | 183 | Girindranath Kundu ... | 17-3 | Second |
| | 184 | Taraprasanna Mukhopadhyay (m) ... | 16 6 | First |
| | 185 | Gopikaranjan Ray (m) | 16 1 | First |
| | 186 | Nareschandra Ray (m) | 16-1 | First |
| | 187 | Nirmolendu Chand ... | 16-2 | Second |
| | 188 | Sibchandra Ghosh ... | 16-1 | First |
| | 190 | Jogendramohan Ghosh (Mm) .. | 17-5 | First |
| | *191 | Bimalendunath Ray (MVm) ... | 16-3 | First. |
| | 192 | Gaurisankar Ray (MVm) ... | 16 | First |
| | 193 | Brajadulal Dhar ... | 21 2 | Second |
| | 194 | Sachindranarayan Misra | 17-4 | Second. |
| | 195 | Phanindraprasad Ray | 18-2 | Second. |
| | 196 | Manindrachandra Sengupta ... | 17-3 | Third |
| | 199 | Kismatulla Ahamed ... | 17 8 | Third. |
| | 200 | Nurazaman Ahamed ... | 18-2 | First. |
| | 201 | Solaiman Mozumdar ... | 20-1 | Second. |
| | | **Saidpur H. E. School.** | | |
| Din. | 202 | Binaykrishna Sarkar (m) | 17-6 | First. |
| | 203 | Jogendranath Pabi (Mm) ... | 18-3 | First |
| | 204 | Nanigopal Acharyya | 19-6 | Second. |
| | 205 | Sureschekhar Pal (M) .. | 16 2 | First |
| | 206 | Bibhutibhushan Basu (m) ... | 17-1 | First |
| | 207 | Rama Prasad Lall ... | 17-2 | Second. |
| | 208 | Anilkumar Rudra (Mm) | 16-5 | First |
| | 210 | Upendranath Gangopadhyay ... | 21-6 | Third. |
| | 211 | Kshitischandra Sarkar | 17-6 | Second |
| | 212 | Tarapada Das ... | 18-1 | Second. |
| | 213 | Haridas Basu ... | 18-5 | First |
| | 214 | Sudhirnath Bhattacharyya ... | 16-1 | First |
| | 216 | Harendranath Karmakar (m) ... | 17-2 | First |
| | 218 | Hafezuddin Ahmed ... | 17-1 | Second. |
| | 220 | Mofizuddin Mia ... | 18-5 | Second. |
| | | **Private Students.** | | |
| Din. P. | 1 | Manindrakumar Pattadar | 17-7 | First |
| | | **Bandura Gobindapur Holy Cross H. E. School.** | | |
| Far. | 2 | Taraknath Das (Mml) | 18-10 | First. |
| | 3 | Indubhushan Datta (Mm) ... | 16-7 | First |
| | 4 | Surendrakumar Nag (m) ... | 17-4 | First. |
| | 5 | Amulyachandra Datta | 21-1 | Second |
| | 6 | Abdul Khaleque Bhuya | 16-6 | First |
| | 7 | Shoraskanta Datta ... | 16-4 | First. |
| | 8 | Abdul Hamid Dewan (L) ... | 18 | First. |
| | 9 | Md Ismail Bhuyia ... | 17 4 | First |
| | | **Rupapat B. C. Academy.** | | |
| | 15 | Sudhirchandra Sengupta ... | 19-6 | Second |
| | 19 | Matiar Rahman Mridha | 17-7 | Second. |
| | | **Alsrashi Shivasundari Academy.** | | |
| | 23 | Harimohan Sarkar ... | 19-6 | Third |
| | 24 | Mohinimohan Acharyya | 16-2 | First. |
| | 25 | Rameschandra Banik (ml) ... | 18-6 | First |
| | 26 | Aswinikumar Mondal (m) ... | 16-6 | First |
| | 27 | Suryyakanta Roy (Lml) ... | 16-3 | First |
| | 28 | Sasadhar Saha (MLml) | 17-3 | First. |
| | 29 | Niranjan Sarkar .. | 18 4 | First. |
| | 30 | Waizuddin Miah ... | 16-5 | First. |
| | | **Baliakandi H. E. School.** | | |
| | 31 | Ahasan Uddin Mollah | 18-10 | Second. |
| | 33 | Promodkumar Sen ... | 16-7 | First. |
| | 34 | Niradbaran Rajbansi ... | 21 | First. |
| | 35 | Rohinikanta Basu ... | 19-4 | First. |
| | 37 | Prabodhchandra Bhattacheryya ... | 18-8 | First |
| | 38 | Subodhchandra Gangopadhay ... | 19-6 | Second. |
| | 40 | Rebatikanta Das ... | 19-11 | Second. |
| | 41 | Rebatimohan Biswas ... | 22-10 | Second |
| | | **Tala North Suburban School.** | | |
| | 42 | Jnanendrakumar Ray (MLml) | 17-3 | First. |

| Roll. | No. | Name. | Age | Division in which the candidate has passed. |
|---|---|---|---|---|
| | | **Karakdi R. S. H. E. School.** | | |
| Far. | 43 | Dwijendrachandra Bhaduri (m) ... | 17-1 | First |
| | 44 | Bibhutibhushan Sarkar (Mm) ... | 17 | First |
| | 45 | Birendranath Chattopadhyay (Mm) ... | 17-11 | First |
| | 46 | Anadinath Saha (m) ... | 20-1 | First. |
| | 47 | Harendrabihari Lahiri | 17 2 | Second |
| | 49 | Kazi Aktar Hossain (m) | 16-3 | First |
| | 50 | Satischandra Das (Mm) | 18-3 | First |
| | 51 | Brajeswar Sanyal ... | 16-3 | First |
| | 52 | Binaybrahma Lahiri (IH) .. | 17 1 | First |
| | 53 | Kiranchandra Sanyal | 19-1 | Second |
| | 54 | Adhirlal Sanyal ... | 21-6 | Second. |
| | 55 | Dhirendranath Chakrabarti ... | 20 4 | Third |
| | 56 | Amarendranath Bhattacharyya ... | 16 10 | First |
| | 57 | Kalachand Biswas .. | 19-11 | Second |
| | | **Khankhanapur S. M. Institution.** | | |
| | 58 | Manindranath Saha ... | 18-7 | First |
| | | **Rajbari Raja Suryyakumar Institution.** | | |
| | 59 | Manmathanath Dasray | 17-1 | First |
| | | **Faridpur Zilla School.** | | |
| | 60 | Kshitischandra Sengupta .. | 16 1 | First |
| | 61 | Annadaranjan Sinha . | 17-11 | First |
| | 62 | Upendranath Biswas ... | 17-2 | First. |
| | 63 | Manindrachandra De (Mm) ... | 20 1 | First |
| | 64 | Manoranjan Ghoshal (Ml) ... | 16-7 | First |
| | 65 | Jyotischandra Guha ... | 18 3 | First |
| | *66 | Sudhirkumar Guha (MLml) .. | 16-1 | First |
| | 67 | Surendramohan Gupta (Lm) ... | 17-7 | First |
| | 68 | Prannath Kundu ... | 18-2 | First |
| | *69 | Kshitischandra Nag (ml) .. | 18-2 | First |
| | *70 | Kedarnath Sarkar (Ml) | 18-10 | First |
| | 71 | Nirupamchandra Sen (Mm) ... | 16-10 | First |
| | 72 | Saileschandra Sen ... | 17-1 | First. |
| | *73 | Jyotenamay Ray (Mm) | 16-5 | First. |
| | 74 | Manoranjan Ray (m) ... | 17-11 | First. |
| | 75 | Amulyaprasad Sen (m) | 17-8 | First |
| | 76 | Prasanntakumar Sen (Mm) ... | 16 | First. |
| | 77 | Amritalal Dasgupta ... | 17-7 | First |
| | 78 | Kumudbandhu Guha ... | 19 8 | First |
| | 79 | Kesabchandra Chakrabarti ... | 16-2 | First |
| | 80 | Sasibhushan Chakrabarti ... | 18 1 | Second. |
| | 81 | Phanindranath Ray ... | 17-2 | First. |
| | 82 | Jatindranath Sengupta | 18-1 | First |
| | 83 | Jagatjiban Ray ... | 16-11 | First. |
| | 84 | Abu Ahmed Abdul Ali (V) ... | 17 2 | First. |
| | 85 | Iasin Ahmed ... | 17-2 | First. |
| | | **Bhanga H. E** | | |
| | 86 | Pramathanath Sarkar | 18-4 | First. |
| | 87 | Narendranath Saha (Mml) ... | 20-1 | First. |
| | 88 | Saratchandra Saha (Mml) ... | 16 11 | First |
| | 89 | Kshirodbihari Ray ... | 18-9 | Second |
| | 92 | Debendranath Ray ... | 17-2 | Third |

| Roll. | No. | Name | Age. | Division in which the candidate has passed. |
|---|---|---|---|---|
| | | **Bhanga H. E. School**—*concld* | | |
| Far. | 94 | Rebatikanta Nag (m) | 17-3 | First |
| | *95 | Jajneswar Mandal (MLml) .. | 18-1 | First |
| | 96 | Debkumar Guha (m) ... | 18-5 | First |
| | 97 | Manindranath Ghoshal (m) .. | 16-9 | First. |
| | 98 | Rajblochan Datta (Mm) ... | 18-10 | First. |
| | 101 | Brajendramohan Bhaumik ... | 16-10 | Second. |
| | *102 | Pramodkumar Basuraychaudhuri (MLVml) | 18-5 | First |
| | 103 | Nagendranath Basu (Mm) ... | 19-1 | First |
| | 104 | Batakrishna Banik ... | 18-5 | First |
| | 106 | Bhupatimohan Saha ... | 17 3 | First |
| | 107 | Upendranath Mitra ... | 18-3 | Second |
| | 113 | Nripendranath Brahma | 16-11 | First |
| | 114 | Sailendranath Bandyopadhyay ... | 17-1 | First |
| | 118 | Kazi Muhammed Habibullah (Mm) ... | 17-1 | First |
| | 121 | Mollah Abdul Hakim ... | 19-7 | Second. |
| | 122 | Matior Rahoman ... | 16-9 | First |
| | | **Faridpur Zilla School.** | | |
| | 124 | Manindrachandra Bagchi | 17-11 | First |
| | | **Rajbari Raja Suryyakumar Institution.** | | |
| | 126 | Hrishikes Mantra (l) | 19 3 | First |
| | 128 | Prabodhkumar Bhaumik ... | 16-2 | First |
| | 130 | Prakaschandra Pal .. | 16 1 | Second |
| | 131 | Saileschandra Dattagupta ... | 16-3 | Second |
| | 134 | Upendranath Mitra ... | 19-7 | Second |
| | 136 | Mahammod Sorwarali | 16-1 | Second |
| | 137 | Annadamohan Lahiri | 17-2 | Third. |
| | 138 | Priyasankar Ghosh ... | 18-11 | Second |
| | 141 | Imam Ahammed ... | 21 10 | Third |
| | 142 | A F Md. Syedul Hoque (m) ... | 16-6 | First |
| | | **Khankhanapur S. M. Institute.** | | |
| | 143 | Abbas Ali Molla ... | 21-5 | First. |
| | 144 | Susilkumar Datta (l) ... | 16-1 | First |
| | 145 | Prakaschandra Chaudhuri ... | 17-1 | First |
| | 146 | Santoshkumar Kundu (M) ... | 16 10 | First. |
| | 147 | Praphullakumar Guha | 17-1 | First |
| | 148 | Satischandra Kundu | 19-9 | First. |
| | 149 | Narottam Dattabanik (m) ... | 16 | First. |
| | 150 | Nagendranath Datta ... | 19-8 | Second |
| | 152 | Ramanimohan Ghosh | 19-1 | Second |
| | 154 | Manmathakumar Basu | 18-2 | First. |
| | | **Faridpur Ishan Institution.** | | |
| | 158 | Priyanath Bhattacharyya (m) ... | 17-2 | First |
| | 160 | Bijalikumar Dasgupta | 16-1 | First |
| | 161 | Satyaranjan Dasgupta | 18 | First |
| | 162 | Bankimchandra Datta | 18-9 | First. |
| | 163 | Atulyakumar De ... | 19-8 | First |
| | 164 | Manoranjan De (M) ... | 19-5 | First |
| | 165 | Kalichandra Datta (Mm) ... | 16-1 | First |
| | 166 | Praphullakumar Ghosh | 17-8 | First |
| | 167 | Sachindramohan Majumdar ... | 19-3 | Second |
| | 169 | Rebatimohan Majumdar (m) ... | 18-9 | First |

| Roll | No. | Name. | Age. | Division in which the candidate has passed |
|---|---|---|---|---|
| | | **Faridpur Zilla Institution**—*concld* | | |
| Far. | 170 | Jatindranath Naharay | 17-7 | Second |
| | 171 | Jogendrachandra Samaddar ... | 16 1 | First |
| | 173 | Rebatiranjan Sarkar ... | 17 | First |
| | 175 | Harshamohan Mukhopadhyay ... | 16 10 | Second |
| | 177 | Akhilchandra Naharay (MG) . | 18-7 | First |
| | 178 | Dwijendrakumar Sanyal ... | 17-3 | First |
| | 179 | Prabhaskumar Sinha | 19-10 | First |
| | 180 | Manindramohan Basu | 19-8 | Second |
| | 181 | Durgamohan Dattagupta ... | 16-3 | Second |
| | 183 | Radhikamohan Mukhopadhyay ... | 17-1 | First |
| | 184 | Charuchandra Basu ... | 21-7 | Second |
| | 185 | Niradbandhu Mukhopadhyay ... | 16-2 | First |
| | 188 | Manojmohan Guhamajumdar ... | 18-11 | Second |
| | | **Manikdaha Lilabati Seminary.** | | |
| | 190 | Narendranath Biswas | 19 10 | First |
| | 191 | Jatindramohan Majumdar ... | 19-1 | First |
| | 192 | Abinascandra Datta (m) ... | 16-5 | First |
| | 193 | Haripada Sarkar ... | 18-8 | Second |
| | | **Sealmari George Academy.** | | |
| | 197 | Kshiredchandra Kar ... | 16 10 | First |
| | 199 | Praphullakumar Kundu | 17 4 | First |
| | 205 | Ushakanta Ghosh ... | 19 5 | Second |
| | 206 | Kalipada Basu ... | 17-1 | Third |
| | 207 | Jatindramohan Ghosh | 16-7 | First |
| | 208 | Binodbihari Sikdar (H) | 17-8 | First |
| | 209 | Mahendranath Saha ... | 19-1 | First |
| | 211 | Manoranjan Ghosh ... | 17 | Third |
| | 212 | Banabihari Datta ... | 19-1 | First |
| | 213 | Satischandra Gupta ... | 17-8 | Second |
| | 214 | Abu Muhammad Afsaruddin ... | 19 | First |
| | 215 | Abu Hena Abdul Bari | 18 | Second |
| | 220 | Abdul Wadood Molla | 23-6 | First |
| | | **Faridpur Zilla School.** | | |
| | 221 | Amiyakumar Ghosh (Mm) ... | 16-8 | First. |
| | | **Sandhura Gobindapur Holy Cross H. E. School.** | | |
| | 222 | Sudhirchandra Das ... | 17-6 | First |
| | | **Balshrashi S. S. Academy.** | | |
| | 223 | Narendrachandra Biswas ... | 19-11 | First |
| | | **Rangpur Zilla School.** | | |
| | 224 | Dharanibhushan Sengupta (Ih) ... | 16 | First |
| | | **Faridpur Zilla school.** | | |
| | 225 | Kalipada Ghosh (ml) | 16-5 | First |
| | | **Private Students.** | | |
| Far. P. | 1 | Bipinbihari Sengupta | 19-11 | Second |
| | 2 | Harendrakumar Samaj dar (m) ... | 21-5 | First. |

| Roll. | No. | Name | Age. | Division in which the candidate has passed. |
|---|---|---|---|---|
| | | **Mangalkandi H. E. School.** | | |
| Feni | 2 | Krishnakumar Ray ... | 17-1 | First. |
| | 3 | Chandrakumar Nath ... | 17-5 | First. |
| | 4 | Kailaschandra Majumdar ... | 18-4 | Second. |
| | 5 | Hariprasad Datta (MLml) ... | 16-2 | First. |
| | 6 | Nirmalchandra Chakrabarti ... | 16 1 | First. |
| | 7 | Niharranjan Chakrabarti ... | 16-1 | First |
| | 8 | Gangacharan Bhaumik | 18-2 | Second. |
| | 9 | Rebatiraman Majumdar | 17-8 | Third. |
| | 10 | Pulinbihari Chakrabarti | 18-11 | Second. |
| | 11 | Durgaprasanna Chakrabarti ... | 18-1 | Second |
| | 12 | Kazi Afzal Hoque ... | 16-1 | Second |
| | 13 | Salamot Ullah ... | 19-5 | Second |
| | 14 | Syed Ahmed (MLml) | 16-8 | First. |
| | 19 | Nural Haque ... | 16 | First |
| | | **Chhagalniya H. E. School.** | | |
| | 22 | Sachindrachandra Chakrabarti ... | 19 2 | First |
| | 23 | Umeschandra Datta (m) ... | 16-5 | First |
| | 25 | Birendranath Ghosh .. | 16-4 | First |
| | 26 | Surendranath Bhattacharyya ... | 19 10 | Third |
| | 27 | Mahamad Safiullah ... | 19 1 | Second |
| | 28 | Momtazol Hoque | 18 9 | First |
| | 29 | Nur Ahamed ... | 16-7 | First. |
| | 30 | Obider Rahaman ... | 16 7 | First |
| | 31 | Nazimal Karim ... | 19 | First. |
| | 32 | Delwar Hossain ... | 20-2 | Second |
| | | **Feni H. E. School.** | | |
| | 33 | Nirmalendubikas Palit (E) ... | 16-10 | First |
| | 34 | Haricharan Nath (MLml) .. | 17-2 | First |
| | 35 | Srimantakumar Banik (m) ... | 16-11 | First |
| | 36 | Jatindrakisor Chakrabarti (m) ... | 16-2 | First |
| | 38 | Jirendrakumar Majumdar ... | 16-6 | Second |
| | 39 | Sisschandra Chaudhuri | 18-3 | First |
| | 40 | Heramballal Majumdar | 16 2 | Second. |
| | 41 | Manomohan De ... | 17-5 | Second |
| | 43 | Harendrakumar Dhar | 17 11 | Second |
| | 45 | Jogendrakisor Datta ... | 18-1 | Second. |
| | 47 | Sachindrabinod Sarma | 20-1 | Third |
| | 48 | Chandrabhushan Datta | 16-5 | Third |
| | 49 | A. T M. Samsuddin Chowdhury ... | 16-3 | First. |
| | 50 | Serajal Islam ... | 18-11 | Second. |
| | 51 | Kazi Mazharal Hoque ... | 19-1 | Second |
| | 53 | Bashu Miah (ml) ... | 16-5 | First |
| | 54 | Aziz Ullah ... | 16-5 | First |
| | 55 | Lutful Karim ... | 16 | First |
| | 56 | Mohammadul Karim ... | 16-1 | First. |
| | 57 | Chandu Meah ... | 18 7 | Second. |
| | 58 | Mahammed Ishaque ... | 17-4 | Second. |
| | 59 | Balayet Hossain ... | 17-2 | Second. |
| | | **Feni Institution.** | | |
| | 60 | Jaladhar Banik ... | 19-3 | Second. |
| | 68 | Jogendranath Kansabanik ... | 21-4 | Second |
| | 69 | Niradbaran Majumdar | 16 | Second |
| | 72 | Korban Ali. ... | 21-11 | Second. |
| | 75 | Abdul Wadud ... | 18 | Second. |
| | 76 | Sultan Ahmed ... | 19-8 | First. |
| | 77 | Sultan Ahamad Khondker | 20-1 | Second |

| Roll. | No. | Name. | Age. | Division in which the candidate has passed. |
|---|---|---|---|---|
| | | **Amirabad H. E. School.** | | |
| Feni | 80 | Nakuleswar Chaudhuri (m) ... | 16-5 | First |
| | 81 | Tarakeswar Chaudhuri | 17-3 | Second |
| | 82 | Surendrakumar Chakrabarti ... | 16-1 | First |
| | 85 | Bhagabatiprasanna Chakrabarti ... | 16-1 | Second |
| | 87 | Durgaprasanna Bal ... | 17 | Second |
| | 88 | Jogendrachandra Chakrabarti ... | 17-4 | First |
| | 92 | Md Nasir Ahmad (m) | 17-1 | First |
| | 93 | Habibar Rahman ... | 22-5 | First |
| | | **Basurhat Abdul Halim Coronation H. E. School.** | | |
| | 96 | Harimohan Majumdar | 16-10 | Second |
| | 98 | Manomohan Sil ... | 16-2 | First |
| | 100 | Mahammed Abdul Latif Mollah ... | 18-8 | Second |
| | 101 | Moqubul Ahmed Chowdhury ... | 16-1 | Second |
| | 102 | Muhammad Abdus Sobhan ... | 16 2 | First |
| | 107 | A K M. Mojibol Hoque ... | 18-1 | Second |
| | | **Mangalkandi H. E. School.** | | |
| | 108 | Mohammed Ibrahim .. | 18 6 | First |
| | | **Feni Institution.** | | |
| | 109 | Rameschandra Banik (m) .. | 17 10 | First |
| | 110 | Chittaranjan Chakrabarti ... | 16-8 | Second |
| | 112 | Hafezar Rahman .. | 17 | Second |
| | | **Private Students.** | | |
| Feni P. | 1 | Ahmad Mujtaba Ansari | 16-2 | Second |
| | 3 | Lutfer Rahaman Chowdhury ... | 18-1 | Second |
| | | **Tulsighat K. N. H. School.** | | |
| Gai. | 1 | Pareshnath De .. | 19 7 | Second |
| | 2 | Raicharan Dasmahanta (Mm) ... | 18-3 | First |
| | | **Galbandha Islamia High School.** | | |
| | 4 | Harihar Das (MLml) ... | 16 1 | First |
| | 5 | Satischandra De ... | 19-10 | First |
| | 6 | Radhamadhab Majumdar ... | 23-3 | Second |
| | 7 | Sachindranath Chakrabarti ... | 16 | First. |
| | 8 | Annadamohan Sen ... | 18-2 | First. |
| | 9 | Manmathanath Chattopadhyay ... | 21 8 | First |
| | 11 | Bhupendrachandra Ray | 16-7 | Second. |
| | 12 | Manmathanath Das ... | 18-4 | Second. |
| | 14 | Manindrachandra Rakshit ... | 19 2 | Third |
| | 16 | Sailendramohan Sen ... | 18-5 | Second |
| | 17 | Basantakumar Barma... | 18 | Third. |
| | 19 | Nurul Islam Md. Serajul Hoque Mandal ... | 18-2 | First |
| | 20 | Md. Moser Uddin Shaike ... | 19-7 | Second. |
| | 21 | Hosor Uddin Sarker ... | 19-1 | Second. |
| | 22 | Dhirendranath Majumdar (m) ... | 16-4 | First |
| | 23 | Kheraj Uddin Ahmed | 20-4 | First |
| | 24 | Mafiz Uddin Sarkar ... | 19-5 | Second |
| | 25 | Tofeluddin Sarkar ... | 21 1 | Second. |
| | 35 | Hamid Uddin Ahamad | 17-11 | Second |
| | | **Gobindganj H. E. School.** | | |
| Gai. | 38 | Jadunath Bhaumik ... | 19-2 | Second |
| | 42 | Harigopal Sarkar ... | 19-2 | Second. |
| | 43 | Bijaykrishnur Sarkar ... | 22 11 | Second |
| | 44 | Sarbanandanarayan Ray ... | 16-2 | Second. |
| | 46 | Nasir Uddin Sarkar ... | 16 8 | Second. |
| | 47 | Abbas Ali Prodhan .. | 18 10 | Second |
| | 49 | Quazi Mahammed Akhtarazzaman ... | 17 8 | Second |
| | 50 | Asabah Prodhan ... | 16-2 | First |
| | 51 | Md Eusof Ali Sarcir (ml) ... | 18-8 | First. |
| | | **Sadullapur H. E. School.** | | |
| | 52 | Aswinikumar Sil ... | 16-8 | Third |
| | 53 | Afsos Uddin Ahmed ... | 16-1 | First. |
| | 55 | Umeschandra Barma | 16 3 | Second |
| | 56 | Abul Hossain Miah (MLml) .. | 16 3 | First. |
| | 57 | Afsor Uddin Shah (Mml) ... | 17-2 | First. |
| | | **Galbandha H. E. School.** | | |
| | 58 | Prabhamay Bhattacharyya (Lm) ... | 19-5 | First |
| | 59 | Surajkanti Munsi ... | 16 | First |
| | 60 | Abinaschandra Chaudhuri ... | 21-6 | First |
| | 61 | Jatindramohan Datta | 16-7 | First |
| | 62 | Amarendranath Ray (m) | 17-7 | First |
| | 63 | Praphullachandra Lahiri | 18-3 | Second |
| | 64 | Dhirendramohan De ... | 18-3 | First |
| | 65 | Dineschandra Sarkar ... | 21-7 | Second |
| | 67 | Niradbihari Sikdar ... | 17-3 | Second. |
| | 68 | Praphullacharan Chakrabarti ... | 16-2 | Second |
| | 69 | Bhabanibhushan Sen | 16 9 | Second |
| | 70 | Sudhirchandra Ray .. | 16-1 | First |
| | 71 | Amiyaranjan Chaudhuri | 16-2 | First |
| | 72 | Tahasinuddin Ahamed | 16-3 | Second. |
| | 73 | Arijitkumar Kar ... | 16 | First |
| | 74 | Kaliprasanna Bhattacharyya ... | 19-6 | First. |
| | 75 | Amareschandra Pramanik ... | 17-1 | Second |
| | 76 | Nagendranath De ... | 16-10 | Third. |
| | 77 | Khabiruddin Sirker ... | 19-4 | Third |
| | 78 | Jogeschandra Bakai ... | 17-9 | Second |
| | 79 | Md. Dabiruddin ... | 18-2 | Second. |
| | 81 | Md Abual Mozaffar ... | 17-4 | First. |
| | 82 | Mahamad Abbasali ... | 22-4 | Third. |
| | 83 | Khabiruddin Mondal ... | 21-1 | Second |
| | 84 | Khejaruddin Sarkar ... | 19 | Second |
| | 85 | Mayezuddin Sarker (m) | 18-9 | First |
| | 86 | Asrafali Shafokir ... | 18-1 | First |
| | 87 | Ahasanuddin Choudhuri (m) ... | 20-3 | First |
| | 88 | Md Delwor Hossein ... Mandel (MLml) ... | 19-5 | First |
| | 89 | Tasimuddin Sarker ... | 21-2 | First |
| | | **Seika Maharaja Gossimbazar High School.** | | |
| | 91 | Kamimikumar Barmasarkar ... | 26 | Second |
| | 92 | Benimadhab Das ... | 19-9 | Second |
| | 93 | Nasibor Rahaman Mandel ... | 20-2 | Second |
| | | **Ulipur M. E. H. E. School.** | | |
| | 94 | Pratapchandra Biswas (MLm) ... | 16-9 | First |
| | 95 | Chittaranjan Biswas (Mm) ... | 16-2 | First. |

| Roll. | No. | Name | Age. | Division in which the candidate has passed |
|---|---|---|---|---|
| | | **Ulipur M. S. H. E. School**—*concld* | | |
| Gal. | 96 | Dhairyyanarayan Sarkar ... | 16-3 | Second |
| | 97 | Mahendranath Sengupta (Mm) ... | 16-7 | First |
| | 98 | Jogendranath Chakrabarti ... | 18-3 | First |
| | 99 | Praphullakumar Ghosh | 19-1 | Second |
| | 100 | Dakshinaranjan Ray ... | 19-6 | Second |
| | 101 | Jatindramohan Sarkar | 21-6 | First |
| | 102 | Haridas Sengupta (H) | 17-1 | First |
| | | **Teacher.** | | |
| Gal. T. | 1 | M Abdul Hamid Miah | | Passed |
| | | **Orakandi H. E. School.** | | |
| Gop. | 1 | Janardan Bala .. | 17 9 | First |
| | 3 | Phanibhushan Basu (M) | 18-11 | First. |
| | 4 | Rasikchandra Basu ... | 19 | Second |
| | 5 | Kesabchandra Guha .. | 19-3 | Second |
| | 7 | Mahammad Ejaherul Hoque (M) ... | 19-1 | First |
| | 8 | Harendranath Biswas | 17-9 | First |
| | 11 | Mahammad Aftab Hossain ... | 18-9 | First |
| | 12 | Samsul Huq Khan ... | 20-7 | Second |
| | | **Kasiani G. C. H. E. School.** | | |
| | 15 | Aswinikumar Saha ... | 20-7 | Third |
| | 16 | Monoranjan Patra .. | 16-1 | First |
| | 17 | Kshitindranath Sen-Gupta (M) .. | 17-7 | First |
| | 19 | Abdul Maleque Shariff | 17-7 | Second |
| | | **Gopalganj Sitanath Academy.** | | |
| | 20 | Siddheswar Saha ... | 18-2 | First |
| | 21 | Manimohan Karmakar | 16-6 | Second |
| | 22 | Sukumar Ray ... | 16-4 | First |
| | 23 | Mahendranath Sikdar | 17 4 | First. |
| | 24 | Amulyaratan Mukhopadhyay ... | 19-1 | Second |
| | 26 | Prabhatkusum Ghosh | 18-7 | Third |
| | 30 | Golam Sorowar Molla | 19-2 | Second |
| | 31 | Mahammad Abdul Jahl Mollah .. | 18-3 | Second |
| | 32 | Muhammad Muzaffar Hossain (MLm) ... | 16-2 | First. |
| | 33 | Mosharraff Hassain Chowdhury, II ... | 20-8 | Third |
| | 36 | Asadazzaman Mia ... | 17-1 | Second. |
| | 37 | Mosharraff Hassain Chowdhury, I ... | 21-4 | Second. |
| | | **Fukura Madanmohan Academy.** | | |
| | 41 | Moksudal Haque .. | 16 7 | Second |
| | 43 | Haripada Basu ... | 17-2 | First. |
| | 44 | Amritalal Chakrabarti | 18-1 | First. |
| | 45 | Haripada Chakrabarti (m) ... | 17-5 | First |
| | 46 | Subalchandra Chattopadhyay ... | 18-1 | First |
| | 47 | Prabhatchandra Gangopadhyay ... | 17-1 | First. |
| | 49 | Sureswar Chakrabarti | 19-1 | Second. |
| | 50 | Lalmohan Ghosh ... | 18-1 | First |
| | 51 | Phanindranath Sarkhel | 20-4 | First |
| | 52 | Pulinbihari Sikdar ... | 20-3 | Third. |
| | 53 | Rokonuddin Molla ... | 20-1 | Third. |

| Roll. | No. | Name. | Age. | Division in which the candidate has passed. |
|---|---|---|---|---|
| | | **Gopalgunge Mathuranath Institution.** | | |
| Gop. | 56 | Manoranjan Ray ... | 20-5 | Second. |
| | 57 | Kiranchandra Biswas | 18-5 | First. |
| | 58 | Abinaschandra Chakrabarti (m) ... | 16 8 | First |
| | 59 | Rameschandra Chaudhuri (m) ... | 16-4 | First. |
| | 60 | Jaladhar Kirttania (m) | 18-1 | Second |
| | 61 | Biswambar Mandal ... | 22-1 | Second. |
| | 62 | Karunakanta Majumdar ... | 22-5 | First. |
| | 63 | Jogendranath Ray (Mml) ... | 16-1 | First. |
| | 64 | Praphullanath Ray ... | 17-2 | First. |
| | 66 | Jyotischandra Sarkar (Mm) ... | 16-8 | First |
| | 67 | Saradaprasad Sarkar .. | 17-2 | First. |
| | *69 | Gopalchandra Mandal (MLm) ... | 16-1 | First. |
| | 71 | Sasibhushan Mandal ... | 17-1 | Second |
| | 72 | Ramapada Raychaudhuri ... | 16-4 | Second |
| | 73 | Atulchandra Sengupta | 18-1 | First. |
| | 76 | Sasankamohan Detaraphdar ... | 17-3 | Second |
| | 79 | Surendranath Mandal | 16 3 | Second |
| | 80 | Sukhamay Haldarthakur ... | 18-1 | Second |
| | 81 | Matilal Sarkar ... | 16-3 | Second |
| | 82 | Md Abul Hashem Sikdar (Mm) .. | 16-2 | First |
| | 85 | Jahural Haque Mia ... | 18-8 | Second |
| | 87 | Mahammad Shaikh Tahazzed ... | 16-4 | Second |
| | | **Private Students.** | | |
| Gop. P. | 1 | Niranjanchandra Biswas | 18-8 | Second. |
| | 2 | Srikanta Biswas ... | 20-5 | Third. |
| | | **Chinsurah U. F. C. Mission High School.** | | |
| Hug. | 1 | Amarendranath Sarkar | 18-2 | First |
| | 2 | Goshthabihari Ghosh | 17-1 | First |
| | 4 | Birendranath Ghosh (m) ... | 17-1 | First |
| | 5 | Haripada Das ... | 19-11 | First. |
| | 6 | Jayantiprasad Mukhopadhyay ... | 16-5 | First |
| | 7 | Bhabeschandra Sarkar | 20-4 | Second |
| | 8 | Gopalchandra Mukhopadhyay ... | 19-11 | First. |
| | 10 | Mrityunjay Pal ... | 17-6 | First. |
| | 11 | Nrisinhamurari Chakrabarti ... | 17-7 | First. |
| | 12 | Satyanarayan Bandyopadhyay ... | 18 | First |
| | 13 | Chittaranjan Sengupta | 18-3 | Second. |
| | 14 | Indubhushan De ... | 17-1 | Second. |
| | 15 | Manindranath Sarkar ... | 16-6 | Second |
| | | **Syamnagar Kantichandra H. E. School.** | | |
| | 17 | Purnachandra Bandyopadhyay ... | 19-11 | Second. |
| | 18 | Santoshkumar Gangopadhyay ... | 18-2 | First. |
| | 19 | Sarbeswar Mukhopadhyay ... | 16-4 | First |
| | 20 | Kalicharan Chaudhuri | 18-6 | Second. |
| | 21 | Manilal Basu (MmH) | 16-11 | First. |
| | *22 | Narayanchandra Chattopadhyay (MLml) ... | 17-1 | First. |
| | 23 | Upendrachandra Nath (Ml) ... | 17-1 | First. |
| | 24 | Niradmohan Sengupta (m) ... | 16-8 | First. |

| Roll. | No | Name. | Age. | Division in which the candidate has passed |
|---|---|---|---|---|
| | | **Chandernagar Dupleix College.** | | |
| Hug. | 25 | Jatindramohan Mitra ... | 16 2 | First. |
| | 26 | Chittaranjan Ray ... | 16-3 | First |
| | 27 | Sailendranath Chattopadhyay, I (Mm) ... | 16-4 | First |
| | 28 | Harisadhan Das (m) ... | 17-8 | First |
| | 29 | Ajitkumar Palit (Mm) | 17-9 | First. |
| | 30 | Chandrabhushan Nandi (M) ... | 18 2 | Second. |
| | 31 | Sailendranath Ghosh ... | 17-6 | First. |
| | 32 | Syamchand Basu (I) ... | 16-1 | First |
| | 33 | Ekkari Bandyopadhyay (Mm) ... | 16-2 | First |
| | 34 | Dhirendranath Kundu (Mm) ... | 18-1 | First |
| | 36 | Labanyakumar Chattopadhyay ... | 16-2 | First. |
| | 37 | Sailendranath Chattopadhyay, II ... | 16-2 | First |
| | 38 | Taraklal Rakshit ... | 17-11 | First. |
| | 39 | Chandankumar Mukhopadhyay (Mm) ... | 16 1 | First |
| | 40 | Jitendranath Bhar (m) | 17-3 | Second |
| | 41 | Chunilal Saha ... | 19-10 | Second. |
| | 42 | Harasankar Ghoshal ... | 18-2 | Second |
| | 43 | Abdul Gani Haldar (Mm) ... | 16-5 | First |
| | 44 | Kalicharan Das (m) ... | 18-2 | First |
| | 46 | Chunilal Chandra ... | 18-6 | First |
| | 47 | Brahmabaran Ghosh (H) ... | 21 | First |
| | 48 | Paresnath Mukhopadhyay ... | 21-3 | First |
| | | **Garbati H. E. School.** | | |
| | 49 | Kamakhyacharan Bhattacharyya ... | 16-7 | First |
| | 51 | Debendranath Mukhopadhyay (V) ... | 17-9 | First |
| | 52 | Nalinranjan Mitra ... | 16-7 | First |
| | 53 | Ramchandra Chakrabarti ... | 17-3 | First. |
| | 54 | Narendranath Pal (m) | 17-10 | First. |
| | 55 | Gaurmohan Nandi ... | 19-7 | First |
| | 56 | Dhananjay Ghosh (Ll) | 20-1 | First |
| | 57 | Anaykrishna Datta ... | 17-3 | First |
| | 58 | Bijaynarayan Laha ... | 16-6 | Second |
| | | **Naihati Mahendra School.** | | |
| | 60 | Mohammad Matiur Rahman (Mm) .. | 16-4 | First. |
| | 61 | Dhrubajyoti Bhattacharyya (Mml) ... | 16-4 | First |
| | 62 | Kamalchandra Kundu (MLm) ... | 16-11 | First |
| | 63 | Purnachandra Bandyopadhyay (V) ... | 16-2 | First. |
| | 64 | Prabodhchandra Nath (Mm) ... | 17-2 | First. |
| | 65 | Pramathanath Chattopadhyay, II (M) ... | 18-4 | First |
| | 66 | Satyacharan Pal (Mm) | 16-4 | First. |
| | 67 | Satyapada Pal ... | 16-4 | First |
| | 68 | Satyendrakumar De (Mm) ... | 17 2 | First. |
| | 69 | Phanindranath Bhattacharyya ... | 18 | Second. |
| | 70 | Pramathanath Chattopadhyay, I (m) ... | 18-4 | First. |
| | 72 | Amiyakumar Dasgupta | 18-5 | Second. |
| | 73 | Basudeb Pal ... | 18-3 | Second. |
| | 74 | Madhaicharan Pal ... | 21-4 | First |
| | 75 | Gauriprasad Bhattacharyya ... | 20 | First. |
| | 77 | Sailkumar Ray ... | 16 9 | First. |

| Roll. | No. | Name | Age | Division in which the candidate has passed |
|---|---|---|---|---|
| | | **Naihati Mahendra School—concld** | | |
| Hug. | 78 | Sibadas Bhattacharyya | 16-8 | First |
| | 79 | Durgacharan Chattopadhyay (M) ... | 16-6 | First. |
| | 80 | Jatindramohan Bhattacharyya ... | 17-1 | First. |
| | 81 | Narayanchandra Bandyopadhyay ... | 18-1 | Second. |
| | | **Halisahar H. E. School.** | | |
| | 82 | Santoshkumar Mitra (Mm) ... | 17-3 | First. |
| | 83 | Hirankumar Ray ... | 16-1 | First |
| | 84 | Narayandas Bandyopadhyay ... | 17-3 | First. |
| | 85 | Prabhaschandra Bhattacharyya (Mm) ... | 17-11 | First |
| | 87 | Ahikeswar Sinha ... | 17-9 | First. |
| | | **Hughli Collegiate School.** | | |
| | 89 | Bamaprasanna Bandyopadhyay ... | 16-11 | First |
| | 90 | Mohitmohan Bandyopadhyay ... | 18-7 | Second |
| | 91 | Kalidas Chattopadhyay | 16-8 | First |
| | 92 | Bhupendranath Datta | 18-10 | Second |
| | 93 | Anadinath Gangopadhyay ... | 18-3 | First |
| | 94 | Ramanimohan Basu (H) | 16-1 | First. |
| | 95 | Khagendranath Mitra | 16-7 | Second. |
| | 96 | Abhaypada Mukhopadhyay (M) ... | 16-10 | First |
| | 97 | Bholanath Basuray (Mm) ... | 16 1 | First. |
| | 99 | Debendranath Mukhopadhyay ... | 17-2 | First. |
| | 100 | Byomkes Mallik ... | 16-1 | First |
| | 101 | Krishnalal Saha (Mm)... | 16-2 | First |
| | 102 | Tulsicharan Bandyopadhyay (Mm) ... | 18-3 | First. |
| | 103 | Badyanath Bhattacharyya (Mlm) ... | 17-1 | First. |
| | 104 | Bibhutibhushan Bhattacharyya (m) ... | 17-5 | First. |
| | *105 | Gobindadeb Bhattacharyya (MLml) ... | 18-4 | First |
| | *106 | Susilchandra Bhattacharyya (MLml) ... | 19-2 | First. |
| | 107 | Sudhansukumar Dasgupta (Mm) ... | 17-5 | First |
| | *108 | Subodhchandra Ghosh (MLml) ... | 16-3 | First |
| | 109 | Kartikchandra Pramanik (m) ... | 16-3 | First |
| | 110 | Manindranath Ray (Mml) ... | 16-3 | First. |
| | 111 | Sheikh Bazlal Karim ... | 17-4 | Second |
| | 112 | Saroykumar Chattopadhyay ... | 16-6 | Second |
| | 113 | Mohammad Ameen ... | 6-2 | First |
| | | **Telinipara Bhadreshwar H. E. School.** | | |
| | 114 | Tarakdas Chattopadhyay (Mm) ... | 16-10 | First |
| | 115 | Ganeschandra Pal (m) .. | 17 | First |
| | 116 | Sikhareschandra Mukhopadhyay ... | 17-3 | First |
| | 117 | Hemchandra Bandyopadhyay ... | 17 | First |
| | 119 | Madhusudan Basu ... | 18 | Third |
| | 121 | Kanailal Ghosh ... | 18-8 | Second |
| | 123 | Sachindranath Chattopadhyay (m) ... | 17-10 | First. |
| | 124 | Praphullachandra Chattopadhyay ... | 20-5 | Second. |

| Roll. | No. | Name. | Age. | Division in which the candidate has passed. |
|---|---|---|---|---|
| | | **Telinipara Bhadreshwar H. E. School**—*concld.* | | |
| Hug. | 125 | Bipinbihari Guchait (Mm) ... | 23-2 | First. |
| | 126 | Amarendranath Chattopadhyay ... | 18-1 | Second |
| | 127 | Binaykrishna De ... | 18-11 | First |
| | 128 | Bibhutibhushan Sarkar | 17-4 | Second |
| | | **Hughli Branch School.** | | |
| | 131 | Sarojkumar Chattopadhyay (ml) | 16-5 | First |
| | 132 | Indubhushan Raychaudhuri (Ll) | 16-7 | First |
| | 133 | Gopendrakrishna Sil (ML) ... | 16-4 | First |
| | 134 | Kamalal Set ... | 16-11 | First |
| | 135 | Asutosh Pramanik (MLm) ... | 18-1 | First |
| | 136 | Anupam Goswami ... | 17-3 | Second |
| | 137 | Sibchandra Pal ... | 16 1 | Second |
| | 138 | Rajanikanta Ghosh (m) | 16 1 | First |
| | 139 | Ganeschandra Mallik (Mm) ... | 18-3 | First. |
| | 140 | Nagendranath Das ... | 16-9 | Second |
| | 141 | Radhanath Mallik (M) | 16 | First. |
| | 142 | Praphullachandra Mukhopadhyay (Mm) | 16-3 | First |
| | 143 | Paresnath Pal (Mm) ... | 17-1 | First |
| | 144 | Durgadas Pal (Mm) ... | 16-9 | First |
| | 147 | Purnachandra Chakrabarti ... | 18-4 | Second. |
| | 148 | Ramratan Bandyopadhyay ... | 16-7 | First. |
| | 149 | Subodhchandra Nandi | 17 7 | Second |
| | 150 | Dhananjay Nandi ... | 17-8 | Second |
| | 151 | Sudhansusekhar Sinharay ... | 17-3 | First. |
| | | **Chinsura Training Academy.** | | |
| | 154 | Murarimohan Bandyopadhyay (Mm) ... | 16-3 | First. |
| | 155 | Ansubhushan Bhattacharyya (Mm) ... | 17-5 | First |
| | 156 | Hariprasad Bhattacharyya ... | 18 | Second. |
| | 157 | Sureschandra Bhattacharyya ... | 18 3 | First |
| | 158 | Bankimchandra Chattopadhyay (Ml) ... | 16 | First |
| | 159 | Sibcharan Chattopadhyay ... | 17 2 | First. |
| | 160 | Tarapada De ... | 20-4 | First |
| | *161 | Amarnath Gangopadhyay (MLml) ... | 17-3 | First |
| | 162 | Prabhatranjan Ghosh | 16-5 | First |
| | 164 | Panchanan Chattopadhyay (m) ... | 16-1 | First |
| | 165 | Satiprasad Gangopadhyay ... | 17-2 | First. |
| | 172 | Bibhutibhushan Mukhopadhyay (m) | 16 8 | First. |
| | 173 | Satyendranath Pal (m) | 16-2 | First |
| | 174 | Tarakdas Bandyopadhyay ... | 19-4 | Second |
| | 175 | Harirama Bhattacharyya ... | 18-3 | Second. |
| | 176 | Balaichand De ... | 16-1 | First. |
| | 180 | Sambhunath Bhandari (G) ... | 16-1 | First |
| | 181 | Sudhirkumar Dasghosh | 17-7 | Second |
| | 182 | Mahadebchandra De ... | 16-4 | First. |
| | 184 | Bhutnath Pathak ... | 17-7 | Second. |
| | 185 | Madhusudan Sil ... | 16-1 | Second. |
| | 186 | Kalicharan Sil ... | 16-1 | Second |

| Roll. | No. | Name. | Age. | Division in which the candidate has passed. |
|---|---|---|---|---|
| | | **Seinchee S. L. Mukherjee's Free Institution.** | | |
| Hug. | 188 | Karunapada Mukhopadhyay ... | 17-2 | Second |
| | 189 | Ajitkumar Sinha (m) ... | 17-7 | First |
| | 191 | Narayandas Bandyopadhyay ... | 21-4 | Third. |
| | 192 | Basantakumar Ray ... | 17-4 | First. |
| | | **Somrah D. C. H. E. School.** | | |
| | 199 | Jagabandhu Chattopadhyay ... | 18-5 | Second. |
| | 200 | Gaurchandra Bandyopadhyay (m) ... | 18-7 | First |
| | 201 | Prabhatkumar Sil ... | 18 | First. |
| | 202 | Santiprasad Sen ... | 19-1 | Second |
| | | **Chakdighi S. P. Institution.** | | |
| | 203 | Kalikrishna Sinharay ... | 17-9 | Second |
| | 204 | Krishnachandra Sahana | 19-2 | Second |
| | 205 | Tarakdas Ray (M) ... | 19-10 | First |
| | 206 | Haripada Guha ... | 21 2 | Second |
| | 211 | Nirapada Nandi ... | 22 | Second |
| | 212 | Satyaranjan Mukhopadhyay ... | 19 1 | Second. |
| | 214 | Manmathanath Modak | 19-1 | Third |
| | 216 | Satischandra Kole ... | 21-4 | Second |
| | 219 | Bagalacharan Bandyopadhyay ... | 20-6 | Second |
| | | **Hooghly St. John's H. E. School.** | | |
| | 221 | Manindranath Sinha | 17-4 | Second |
| | 222 | Balaicharan Hajra ... | 19-4 | Second |
| | 223 | Kamalapati Pal ... | 17-6 | Second. |
| | 225 | Subodhchandra Mukhopadhayay ... | 16-4 | Second |
| | | **Chinsura Training Academy.** | | |
| | 226 | Siddheswar Pal ... | 16-7 | First |
| | | **Hughli Branch School.** | | |
| | 227 | Indranarayan Kundu ... | 17 5 | Second |
| | | **Hughli Collegiate School.** | | |
| | 230 | Debnath Mukhopadhyay ... | 17-7 | Second |
| | | **Female Private Student.** | | |
| Hug. F. P. | 1 | Louisa Fernandes, ... | | First |
| | | **Private Students.** | | |
| Hug. P. | 1 | Bhubanmohan Bandyopadhyay (M) ... | 18-10 | First. |
| | 2 | Tarapada Pal (Lml) ... | 21-9 | First |
| | 3 | Hemendranath Mandal | 22-11 | Third |
| | | **Teacher.** | | |
| Hug. T. | 1 | Shaikh Muhammad Yusuf | 24-7 | Passed. |

| Roll. | No. | Name. | Age. | Division in which the candidate has passed. |
|---|---|---|---|---|
| | | **Debiganj N. N. High School.** | | |
| Jal. | *1 | Rajendramohan Sengupta (Mm) ... | 16-3 | First |
| | 2 | Rajanikanta Saha (M) | 16-5 | First |
| | *3 | Asiruddin Ahmed, I (MLml) ... | 17-1 | First |
| | 4 | Mofizuddin Ahamed ... | 16-11 | First |
| | 5 | Md Delwar Hossain ... | 17-2 | First |
| | 6 | Md Faziluddin ... | 18 6 | Second |
| | 7 | Md. Asiruddin, II ... | 18-1 | First |
| | 8 | Jasimuddin Ahamed ... | 16-1 | First |
| | 9 | Reaz-uddin Ahamed ... | 16-2 | First. |
| | 10 | Md Mobarak Ali ... | 19-2 | First |
| | | **Domar H. E. School.** | | |
| | 12 | Santoshkumar Senmajumdar ... | 18-9 | Second |
| | 13 | Kshitischandra Chattopadhyay ... | 17-9 | First |
| | | **Jalpaiguri Zilla School.** | | |
| | 16 | Tarakbandhu Bhattacharyya (M) ... | 20 | First |
| | 17 | Maheswar Das (Mm) ... | 16 10 | First |
| | 18 | Mahendranath Karmakar ... ... | 19 2 | Second |
| | 19 | Sachindranath Ray ... | 17.5 | First |
| | *21 | Rabindranath Majumdar (Mml) ... ... | 16-1 | First |
| | 22 | Sudhirchandra Mukhopadhyay ... | 16 2 | First |
| | 23 | Arunoday Ray (Mm) .. | 16 | First |
| | 24 | Nareschandra Sarkar (m) .. ... | 18-6 | First |
| | 25 | Prabhatranjan Basu (Mml) ... ... | 17-2 | First |
| | 26 | Nitaichandra Ghosh (Mm) ... ... | 17 5 | First |
| | 27 | Mukundalal Gangopadhyay (M) ... | 16-5 | First. |
| | 28 | Pramodranjan Talapatra (M) .. | 18 8 | First |
| | 29 | Manasranjan Chakrabarti (m) ... | 16 9 | First |
| | 31 | Bankimchandra Sanyal | 17-10 | First |
| | 32 | Tejeschandra Ghosh (Mm) ... ... | 16-3 | First |
| | 33 | Bhabataran Chakrabarti ... ... | 18-1 | First. |
| | 34 | Saurendrakumar Basu (M) ... ... | 16 | First |
| | 35 | Sachindranath Maulik | 16-1 | Second |
| | 36 | Bhrantimadhab Ray ... | 17-3 | First. |
| | 38 | Jitendranath Karmakar | 21-1 | Second. |
| | 39 | Purnachandra Bhaumik | 19-4 | Second |
| | 41 | Abanikanta Majumdar | 21 | Second |
| | 44 | Asutosh Mukhopadhyay (G) ... | 17-9 | First. |
| | 45 | Kumudbhushan Sen ... | 21-9 | Third |
| | 46 | Sadanandaprasad Saha | 17 2 | Second |
| | 49 | Shamsheruddin Ahamed | 17-11 | Second |
| | 50 | Safiuddin Ahamed (Lml) ... ... | 17-11 | First |
| | *51 | Khan Sonaruddin (Mml) ... | 18-2 | First |
| | *52 | Fahimuddin Ahmed (MLml) ... | 16-3 | First. |
| | *53 | Hasibul Hossain Md Karim Bad (MLml) | 16-8 | First. |
| | | **Siliguri H. E. School.** | | |
| | 54 | Durgadas Mukhopadhyay (Mm) ... | 17-4 | First. |
| | 55 | Sailendranath Niyogi (m) ... ... | 16-3 | First. |

| Roll. | No. | Name | Age. | Division in which the candidate has passed |
|---|---|---|---|---|
| | | **Siliguri H. E. School**—*concld* | | |
| Jal. | 56 | Bijaychandra Ghatak (Mm) ... ... | 17-11 | First |
| | 57 | Bamandas Bhattacharyya ... | 18-8 | First |
| | 58 | Ramcheese Upadhya (H) ... ... | 20 5 | First |
| | 59 | Sachindranath Basu ... | 19 6 | Third |
| | | **Jalpaiguri Fanindra Deb Institution.** | | |
| | 63 | Basantakumar Raha ... | 18-2 | Second |
| | 64 | Sibadas Ray ... | 17-1 | First |
| | 65 | Sureschandra Guha ... | 17-1 | Second |
| | 66 | Jitendranath Majumdar | 16-11 | Third |
| | 67 | Santikumar Sarkar ... | 18-11 | Second |
| | 68 | Tarapada Mitra ... | 20-7 | First |
| | 69 | Haripada Datta (Mm) | 19-9 | First |
| | 70 | Sudhirchandra Pal (Mm) ... ... | 16 5 | First |
| | 71 | Praphullachandra Chakrabarti ... | 16 | First. |
| | 72 | Syamapada Bandyopadhyay .. | 17-1 | First |
| | 73 | Jogendranath Misra (m) | 17-2 | First |
| | 74 | Kiranchandra Chaudhuri ... | 17 4 | First |
| | 75 | Santoshkumar Bandyopadhyay ... | 17-7 | Second. |
| | 76 | Kumar Matindranarayan ... | 21-3 | Second |
| | 78 | Anantakumar Basu ... | 16-10 | Third |
| | 80 | Subodhchandra Ghosh | 17 | First |
| | 82 | Abhaydas Lahiri ... | 20 2 | Second |
| | 83 | Praphullasankar Sarbadhyaksha (M) ... | 16-1 | First. |
| | 86 | Mahammad Fazley Rabby ... | 17 | Second |
| | 90 | Rahimuddin Ahmed ... | 20 10 | First. |
| | 91 | Krishnachandra Ghosh | 17 7 | First |
| | 92 | Saileskumar Niyogi (Mm) ... | 16-4 | First. |
| | | **Jalpaiguri Zilla School.** | | |
| | 95 | Md Abdul Huque ... | 17-9 | Second |
| | | **Dimla Rani Brindarani Institution.** | | |
| | 97 | Baharuddin Ahmed (M) | 16 | First |
| | 98 | Mahiruddin Ahmed (Lm) ... | 16-1 | First |
| | 99 | Hakimuddin Ahamad | 18-5 | Second. |
| | 100 | Mahzuddin Ahamed ... | 16-7 | First |
| | 101 | Samsulla Ahmed ... | 19-8 | Second |
| | 102 | Umeschandra Sinharay | 21-6 | Second |
| | 103 | Mahendrachandra Barma ... | 17-1 | Second. |
| | | **Nilphamari H. E. School.** | | |
| | *104 | Kesabchandra Biswas (Mml) ... | 17-8 | First. |
| | 105 | Kumudnath Dhar (Mm) ... | 16-1 | First. |
| | 107 | Indubhusan Nanda (m) | 16 9 | First |
| | 108 | Jaminimohan Ray (m) | 16-5 | First |
| | 109 | Nirmalchandra Sengupta (m) ... | 16-1 | First. |
| | 110 | Jyotischandra Dasgupta (m) ... | 17-4 | First |
| | 112 | Rabindranath Ghosh (Mm) ... | 17-8 | First. |
| | 113 | Sudhirkumar Ghosh (Mm) ... | 16-10 | First. |
| | 114 | Hemendrachandra Lahiri ... | 16-1 | Second |
| | 117 | Dineschandra Datta ... | 19-8 | Third. |

| Roll. | No. | Name. | Age. | Division in which the candidate has passed. |
|---|---|---|---|---|
| | | **Nilphamari H. E. School**—*concld* | | |
| Jal. | 118 | Pratapchandra Ray ... | 18-7 | Second |
| | 119 | Mohammed Jamior Rahman ... | 17-11 | First |
| | 120 | Mahamed Muzibur Rahman Chowdhury (M) ... | 17-1 | First |
| | 121 | Jasimuddin Ahmed ... | 18-9 | First |
| | 127 | Maharuddin Ahmed ... | 18-9 | Third. |
| | 128 | Mahammed Matiar Rahman Chowdhury | 18-1 | Second. |
| | | **Thakurgaon H. E. School.** | | |
| | 129 | Aminuddin Ahmed ... | 17-7 | First. |
| | *130 | Ismail Mohammad (Lml) ... | 18 | First |
| | 131 | Binodbihari Ray ... | 17 1 | First. |
| | 132 | Kshitindraprasad Ghosh (M) ... | 17-3 | First. |
| | 133 | Bhabeschandra Sinha ... | 19 | Third. |
| | 134 | Herambanath Ghosh (m) ... | 17 3 | First |
| | 135 | Paresnath Dosarkar ... | 16-1 | First. |
| | 136 | Dineschandra Bhattacharyya ... | 18-4 | First. |
| | 137 | Hemchandra Bandyopadhyay ... | 21-3 | Second. |
| | 138 | Santoshchandra Gangopadhyay (Mm) ... | 16 1 | First. |
| | 140 | Praphullakumar Chattopadhyay ... | 19-3 | Third. |
| | 141 | Atulkrishna Goswami | 16-1 | Second |
| | 142 | Indubhushan Sen (M) | 16-11 | First |
| | 143 | Lakshminarayan Basu | 16 | First. |
| | 144 | Makhanchandra Sarkar | 19 | Second. |
| | 145 | Ganeschandra Gangopadhyay ... | 17-7 | First. |
| | 146 | Rajeswar Sinha ... | 18-3 | Second. |
| | 147 | Nalinnath Chakrabarti | 17-3 | Second |
| | 148 | Sukhaharan De ... | 17-1 | First |
| | | **Ranaghat P. C. H. E. School.** | | |
| | 149 | Rabindranath Chattopadhyay ... | 17 | Third |
| | | **Baluraghat H. E. School.** | | |
| | 150 | Suhridranjan Mukhopadhyay ... | 16 8 | First |
| | | **Female Private Student.** | | |
| Jal. F. P. | 1 | Labonyaprova Banerjee (V) ... ... | | First |
| | | **Private Students.** | | |
| Jal. P. | 1 | Fazal Karim (L) ... | 19-9 | First. |
| | 2 | Nagendranath Sengupta | 23-3 | Second. |
| | 3 | Sabanah Mia ... | 20-11 | Second. |
| | 4 | Mahammad Idris ... | 26-7 | Second. |
| | 5 | Jobbarah Khondeker (V) ... | 19-1 | First. |
| | | **Mujata Dinobandhu H. E. School.** | | |
| Jam. | 1 | Jadunath Bandyopadhyay ... | 16-11 | Second. |
| | 3 | Mahendrachandra Som | 18-6 | Second. |
| | 4 | Banawarilal Modak ... | 18-5 | Second. |
| | 6 | Sudhirchandra Pal ... | 18 | Second |
| | | **Digpait H. E. School.** | | |
| Jam. | 12 | Upendrachandra De ... | 18-1 | Second. |
| | 13 | Ganeschandra Nath ... | 16-2 | First. |
| | 14 | Kesabchandra Ray ... | 18-3 | Second |
| | 15 | Radhabinod Baishnab (Vm) ... | 17-3 | First |
| | 18 | Shaikh Abdul Wahed... | 17-9 | First |
| | 19 | Goherulla Shah ... | 20-1 | Second. |
| | 20 | Badah Ahmed ... | 18-2 | Second |
| | 23 | Nakibuddin Khan ... | 20-8 | Second. |
| | | **Dewanganj Co-operative H. E. School.** | | |
| | 24 | Dineschandra Ghosh | 16-1 | First. |
| | 25 | Himansubhushan Ray | 18 3 | First |
| | 26 | Digendranath Dhar ... | 18-3 | First |
| | 27 | Chandicharan Nath ... | 17-6 | Second. |
| | 28 | Digambar Barma (M) | 16-11 | First |
| | 29 | Sureschandra Bhaumik | 18-2 | Second |
| | 32 | Jogeschandra De ... | 19-1 | Third. |
| | 35 | Prabhatchandra Barma | 18-2 | Second |
| | 37 | Jatindramohan Bhadra | 17 3 | Third |
| | 38 | Sherkh Mohammad Abdul Hamid (l) ... | 17-7 | First |
| | 39 | Md. Maquebul Hossain Siddique ... | 16-5 | Third |
| | 41 | Md Shamsul Haque ... | 16-3 | First |
| | 42 | Md Abdur Rashid ... | 20-11 | First |
| | 43 | Jahlar Ruhman Mujakari .. | 18-3 | First |
| | | **Baliduri Fazel Mohammad High School.** | | |
| | 46 | Abu Mohamed Janabali | 17-2 | Second |
| | 47 | Md Amzad Hossain ... | 18 | Second |
| | 48 | Mohammed Shamsul Haque ... | 20-3 | Third |
| | 52 | Mohammad Abdullah... | 16-4 | Second |
| | 54 | Mohammed Raisuddin Khan ... | 17-11 | Third |
| | 56 | Mohamed Azizar Rahman ... | 22-1 | Second |
| | 58 | Ahmed Hassain ... | 19-10 | Third |
| | | **Jamalpur Deneugh Govt. H. E. School.** | | |
| | 60 | Monoranjan Sarkar *(MLml) ... | 18 | First. |
| | 61 | Praphullakumar Chakrabarti (ml) ... | 16-4 | First |
| | 62 | Sisirkumar Ray (Lm) | 17-1 | First. |
| | 63 | Phanibhushan Mitra (m) ... | 18-1 | First |
| | 64 | Ahibhushan Pal ... | 17-9 | First. |
| | 65 | Susilkumar Ray ... | 16 2 | Second. |
| | 66 | Satindramohan Sahapoddar (Mm) ... | 18 2 | First. |
| | 67 | Santoshchandra Chattopadhyay (m) | 16-4 | First. |
| | 68 | Bisweswar Gangopadhyay ... | 18-4 | First |
| | 69 | Bijaychandra Mukhopadhyay ... | 17-5 | First. |
| | 71 | Kokileswar Guharay ... | 16-2 | First. |
| | 72 | Sachindranath Basu ... | 19-2 | First. |
| | 73 | Surendranath Basak ... | 16-3 | Second. |
| | 74 | Afsaruddin Khan ... | 19-6 | First. |
| | 76 | Mahammed Niamatullah ... | 19-2 | Second. |
| | 77 | Hyderali Mallik ... | 16-9 | First. |
| | 78 | Manirudin Ahamed (ml) ... | 17 | First. |
| | 79 | Shaikh Abdul Khaleque | 17-8 | Second. |
| | 80 | Ramgopal De ... | 17-2 | First. |
| | 81 | Sakhicharan Pal ... | 17-8 | First. |
| | 82 | Shamsuddin Hossain ... | 19 2 | First. |
| | 83 | Shaikh Makhleswar Rahaman (l) ... | 17 | First. |

| Roll. | No. | Name. | Age. | Division in which the candidate has passed. |
|---|---|---|---|---|
| | | **Singhjani High School.** | | |
| Jam. | 84 | Sureschandra Das (m) | 20-4 | First. |
| | 85 | Nagendrachandra Majumdar ... | 18-7 | Second |
| | 86 | Matilal Acharyya (m) | 18-5 | First |
| | 87 | Kshitischandra Misra (m) ... | 19-4 | First |
| | 88 | Gopalchandra Basak ... | 18-8 | First. |
| | 90 | Mohinmohan Sarkhel (m) ... | 16-2 | First. |
| | 92 | Sureschandra Dhar (m) | 16-1 | First |
| | 93 | Manoranjan Sengupta (m) ... | 19-1 | First |
| | 94 | Kunjalal Nag ... | 16-8 | Second. |
| | 95 | Dineschandra Sengupta | 18-1 | Second. |
| | 97 | Nareschandra Som ... | 16-11 | Second |
| | 98 | Jatindrachandra Ghosh | 19-7 | Second |
| | 99 | Jagadischandra Basu-niyogi ... | 16-2 | Second |
| | 101 | Abinaschandra De ... | 21-1 | Second |
| | 110 | Saratchandra Das ... | 20-1 | Third |
| | 111 | Prithwibhushan Lahiri | 18-11 | Third |
| | 113 | Debabrata Basu ... | 16-3 | Third |
| | 114 | Abul Hossain Khan (Mimul) ... | 17-8 | First. |
| | 116 | Md Abdul Jabbar Mia | 18-10 | Second |
| | 117 | Md. Samsuddin ... | 22-2 | Second |
| | 119 | Md Sadekah ... | 18-1 | First |
| | 121 | Jahiruddin Khan ... | 22-8 | Third |
| | 123 | Talepah Mandal ... | 16 2 | Second |
| | 126 | Nazimuddin Ahamed | 17 1 | Second. |
| | 128 | Abdul Mannan .. | 20-1 | Second |
| | 131 | Syed A. T M. Fazlor Rahman ... | 16-1 | Third |
| | | **Islampur Nekjahan H. E. School.** | | |
| | 133 | Hiralal Datta (Mm) ... | 17 | First |
| | 134 | Susobhan Chakrabarti | 17 | Second |
| | 135 | Ramananda Karmakar | 19 | First |
| | 136 | Asitaranjan Pal ... | 17 | Second |
| | 137 | Jogeschandra Datta ... | 20-6 | Second |
| | 138 | Sisirkumar Das ... | 19 | Third |
| | 141 | Md. Ayenal Haque Miah ... | 20-1 | First |
| | 142 | Abdus Suttar ... | 21-1 | Second |
| | 143 | Abiruddin Ahamed ... | 24 | Second. |
| | 144 | Md Azizal Haque Choudhury ... | 18-2 | Second |
| | | **Digpait H. E. School.** | | |
| | 146 | Bimalchandra Sadhya | 17-1 | Third |
| | | **Private Student.** | | |
| Jam. P. | 1 | Belayet Ali (Ll) ... | 24-3 | First |
| | | **Teacher.** | | |
| Jam. T. | 1 | Kazi Safdar Ahmad ... | 24 6 | Passed |
| | | **Naidanga Bhushan H. E. School.** | | |
| Jes. | 4 | Bhupaleschandra Sarkar (M) ... | 18-3 | First |
| | 8 | Mahammad Abdul Quasem ... | 20-9 | Second |
| | | **Sripur M. G. H. E. School.** | | |
| | 10 | Dhritischandra Bhattacharyya ... | 16-11 | First. |
| | 11 | Samatulmohan Mitra | 18-8 | Second |
| | 13 | Durgapada Chakrabarti ... | 16 | Second |
| | 15 | Kalipada Ray (H) ... | 17-2 | First |
| | 16 | Kumudnath Sikdar ... | 20-8 | First. |
| | 17 | Nagendranath Sikdar | 19-2 | Second |
| | 18 | Md. Aziser Rahman ... | 17-10 | First. |

| Roll. | No. | Name. | Age. | Division in which the candidate has passed. |
|---|---|---|---|---|
| | | **Jhenidah H. E. School.** | | |
| Jes. | 19 | Nrityagopal Datta (m) | 18 | First |
| | 20 | Kalipada Basu ... | 18-7 | Second. |
| | 21 | Manmathakumar Sengupta ... | 17 | Second |
| | 22 | Jitendranath Gangopadhyay ... | 19-6 | Second |
| | 23 | Narendranath Saha ... | 16-6 | Third |
| | 24 | Syamapada Sanyal (M) | 16-9 | First |
| | 25 | Panchanan Bandyopadhyay ... | 18 | First |
| | 26 | Pannagbhushan Majumdar ... | 16-8 | Second |
| | 27 | Alauddin Ahamed ... | 17-1 | Second |
| | 28 | Muhammad Esmail Hossain ... | 18 | Second |
| | | **Basundia H. E. School.** | | |
| | 29 | Narendranath Datta ... | 16-9 | Second |
| | 30 | Baidyanath Mukhopadhyay ... | 19-7 | Second |
| | 32 | Khagendranath Pal ... | 19-2 | First |
| | 33 | Prabhasranjan Ghosh | 21-1 | Second |
| | | **Narail Victoria Collegiate School.** | | |
| | 34 | Nalinikanta Samajpati | 17-9 | Second |
| | 35 | Saratchandra Saha ... | 17-1 | First |
| | 36 | Priyanath Ray ... | 19-1 | Third |
| | 37 | Jagatbandhu Pramanik | 18-2 | First |
| | 38 | Hrishikes Mitra ... | 16-3 | First |
| | 39 | Bipinbihari Majumdar | 18-3 | Third |
| | 41 | Atulkrishna Kundu ... | 20-3 | First |
| | 44 | Kalipada Das ... | 18-2 | Second |
| | 45 | Sasibhushan Biswas ... | 20-10 | Second. |
| | 47 | Harigopal Bhattacharyya ... | 17-4 | First |
| | 50 | Harabilas Basu ... | 16-6 | Second |
| | 54 | Mohinmohan Ghosh ... | 18 | Second |
| | 56 | Rasiklal Biswas ... | 18-6 | Second |
| | 62 | Bimalendranath Basu | 16-10 | Third. |
| | | **Naidi-Brahmandanga S. S. Institution.** | | |
| | 63 | Kesablal Saha ... | 20 | First |
| | 64 | Kesablal Mitra ... | 22-7 | First |
| | 65 | Radhanath Saha ... | 16-9 | Second |
| | 66 | Dhirendranath Chakrabarti (m) ... | 17-9 | First |
| | 67 | Aswinikumar Sen (Mm) | 17-2 | First. |
| | 68 | Manmathanath De ... | 19-8 | Second. |
| | 69 | Surendranath Datta .. | 18-8 | Third |
| | 71 | Krishnalal De ... | 21-1 | First. |
| | | **Narail Subdivisional H. E. School.** | | |
| | 72 | Sachindranath Sengupta (Ml) ... | 17 2 | First |
| | 75 | Sibprasad De ... | 19-11 | Second |
| | 76 | Panchanan De ... | 18 | First |
| | 77 | Nareschandra Dasgupta ... | 17 6 | Second. |
| | 78 | Sarojkumar Bandyopadhyay ... | 17 11 | Second |
| | 79 | Santoshkumar Sarkar | 18-1 | Second |
| | 80 | Kanailal Mitra ... | 19-2 | Second |
| | 83 | Kalipada Ghosh ... | 21-1 | Second. |
| | 84 | Amareschandra Basu | 17 | First |
| | 85 | Amarendranath Basu | 17-7 | Second |
| | | **Jhenidah H. E. School.** | | |
| | 87 | Debendranath Karmakar ... | 20-11 | Second |

| Roll. | No. | Name. | Age | Division in which the candidate has passed. |
|---|---|---|---|---|
| | | **Bidyanandakati Rashbihari Institution.** | | |
| Jes. | 89 | Harakumar Raychaudhuri ... | 19-8 | Second |
| | 90 | Pradyotkumar Ghosh (M) | 18-6 | First |
| | 91 | Nabin Sarder (M) ... | 20 2 | First |
| | 92 | Binaykrishna Chattopadhyay ... | 18-10 | Second |
| | 93 | Santiranjan Chattopadhyay ... | 17-10 | Second. |
| | 94 | Kalipada Ghosh (M) ... | 16-4 | First |
| | 95 | Amarendranath Mitra | 18-2 | Second |
| | | **Jessore Zilla School.** | | |
| | 96 | Manomohan Bhattacharyya (Mm) ... | 18-3 | First |
| | 97 | Baidyanath Dalal (M) | 17-11 | First |
| | 98 | Md Enaet Ali ... | 18 11 | Second |
| | 99 | Manindranath Ghosh ... | 20 | Second |
| | 100 | Panchanan Das .. | 19-5 | Third |
| | *101 | Sudhansu Datta (Mm H) | 16-2 | First |
| | 102 | Dulalchandra Pal ... | 17 1 | Second |
| | 103 | Kalipada Bhattacharyya ... | 17-6 | Second |
| | 106 | Francis Xavier ... | 22-8 | Second |
| | 107 | Suryyakumar Ghosh .. | 19-2 | Second |
| | 108 | Mojammel Haque ... | 18-8 | Second |
| | 109 | Rahim Bukhsh ... | 21 7 | Second |
| | 110 | Md Wazihur Rahman (L) .. .. | 16-8 | First |
| | 112 | Ahmad Hossain ... | 16-8 | Second |
| | *113 | Abdul Karim (MLm) . | 16-8 | First |
| | 114 | Munshi Kenaet Ali (M) | 16-7 | First |
| | 115 | Gazi Mujibor Rahman (ML) ... ... | 19-2 | First |
| | 116 | Syed Sakhawat Hossain | 16-5 | Second |
| | 117 | Shaikh Abdul Malek .. | 17-1 | Third |
| | 118 | Rawnaqul Hoque ... | 16-2 | First |
| | 120 | Abdul Aziz ... | 18-3 | Second |
| | | **Kotchandpur H. E. School.** | | |
| | 121 | Nirapada Biswas (m) ... | 16-1 | First. |
| | 126 | Lalmohan Nandi | 17 | First |
| | 128 | Mansur Rahman Khandkar .. | 18-9 | Second |
| | | **Binodepur B. K. High School.** | | |
| | 129 | Suryyakumar Pramanik | 17 | First |
| | 131 | Pulinbihari Mitra .. | 19-6 | Second |
| | 136 | Manmathanath Saha ... | 17 | Second |
| | | **Jaypur Lohagara Institution.** | | |
| | 146 | Amiyamohan Sen ... | 16-9 | Second |
| | 149 | Haripada Ray (M) ... | 17-1 | First |
| | 151 | Haridas Ray (M) . | 16-11 | First |
| | 153 | Jamunkanta Poddar (M) | 17-2 | First |
| | 154 | Binaykrishna Mukhopadhyay ... | 16-4 | Second |
| | 158 | Sanmathanath Datta (m) ... ... | 16-9 | First |
| | 159 | Amulyakumar Das (M) | 17-8 | First. |
| | 160 | Santoshkumar Basu ... | 17 2 | First |
| | 161 | Nikhilbandhu Bandyopadhyay .. | 16-6 | First |
| | 162 | Manibhushan Sarkar ... | 17-1 | First |
| | 163 | Basantakumar Saha ... | 18-6 | Second. |
| | 165 | Jaygopal Chattopadhyay ... | 20-2 | First |
| | 167 | Susilkumar Bandyopadhyay ... | 16-8 | Second. |
| | | **Gangarampur P. K. Institution.** | | |
| | 172 | Tozammel Ali Khondeker ... ... | 18-9 | Second. |
| | 176 | Ramgopal Nandi ... | 16-5 | Second. |
| | 179 | Khagendranath Biswas | 18-3 | Third. |
| | | **Siddhipasa P. S. H. E. School.** | | |
| Jes. | 181 | Matilal Das ... | 19-4 | First. |
| | 182 | Debendranath Nandi ... | 18-3 | Second. |
| | 183 | Nisbhusan Das (H) ... | 19-5 | First |
| | 184 | Nisikanta Chakrabarti | 20 | First |
| | 185 | Charuchandra Ghosh ... | 18-2 | Second. |
| | 186 | Nisbhushan Nandi ... | 17-5 | Second. |
| | | **Abalpur Ramsundar Institution.** | | |
| | 191 | Nanigopal Datta (m) ... | 16-3 | First. |
| | 192 | Bishnupada Ghosh (MVm) ... | 18 2 | First |
| | 193 | Radhakamohan Kundu | 16-1 | Second. |
| | 194 | Saratchandra Kundu ... | 17-7 | Third |
| | 195 | Amulyakumar Nandi (M) ... | 19-9 | First |
| | 196 | Gaurisankar Sikdar (Mm) ... | 18-1 | First |
| | | **Rajghat Jafarpur H. E. School.** | | |
| | 200 | Satischandra Nandi ... | 20-6 | Second |
| | 203 | Jatindranath Kar ... | 18-2 | Second |
| | 206 | Banamali Dhar (M) ... | 19-2 | First |
| | 207 | Praphullakumar Mitra | 16-2 | First |
| | 209 | Jnanendranath Ghosh | 18-7 | Second |
| | 217 | Anilkumar De ... | 19 | Second |
| | | **Jangalbadhal Bhabendra High School.** | | |
| | 223 | Binodbihari Kapuria (Mm) .. | 18-6 | First |
| | 224 | Anathbandhu Mukhopadhyay ... | 19 | Second |
| | 225 | Ajitkumar Bandyopadhyay ... | 16-1 | First |
| | 226 | Praphullakumar Mukhopadhyay ... | 18-11 | Second. |
| | 230 | Ritendranath Basu ... | 16-10 | Second |
| | 231 | Surendranath Mandal | 17-9 | Second |
| | 234 | Anukulchandra Mukhopadhyay ... | 18-2 | Third |
| | | **Baghutia Bivagdi Bholanath H. E. School.** | | |
| | 238 | Khagendranath Biswas | 16-1 | First |
| | 242 | Haranchandra Mitra ... | 17-7 | First |
| | | **Jessore Sammilani Institution.** | | |
| | 244 | Smarajitbhushan Basu (MV) ... | 17-3 | First. |
| | *246 | Subodhchandra Dasgupta (MLVml) ... | 16-6 | First. |
| | 248 | Khagendranath Ghosh, I (Mm) ... | 16-1 | First. |
| | 250 | Mahendranath Ghosh (MVm) .. | 17-7 | First |
| | 251 | Sudhirkrishna Gan ... | 17 | First. |
| | 252 | Dhwajadhari Mukhopadhyay (Mm) ... | 16-1 | First. |
| | 253 | Narayanprasad Mukhopadhyay ... | 16-1 | First |
| | 254 | Rameschandra Raychaudhuri ... | 18 | Second |
| | 258 | Bhabanicharan Nath ... | 20-5 | First |
| | 259 | Satischandra Nandi ... | 18 | Second. |
| | 260 | Rabindranath Pal ... | 18-1 | Second. |
| | 264 | Kaliprasad Bandyopadhyay ... | 17-7 | Second. |
| | 265 | Sailendrakumar Basu | 16-1 | Second. |

| Roll. | No. | Name. | Age. | Division in which the candidate has passed |
|---|---|---|---|---|
| | | **Panjia H. E. School.** | | |
| Jes. | 274 | Lalitmohan Haldar ... | 18-2 | Second. |
| | 275 | Praphullakumar Basu... | 17-7 | Second |
| | 276 | Dhirendranath Chattopadhyay ... | 17-3 | First |
| | 277 | Amalkanti Basu (H) ... | 17 3 | First |
| | | **Harishankarpur Jagatchandra Institution.** | | |
| | 279 | Yakub Hossain Jordder | 20 3 | Second |
| | 282 | Mahendranath Sutradhar (H) ... | 18-11 | First |
| | 283 | Nanigopal Jordar ... | 16 6 | Second |
| | 284 | Jatindranath Kunda (M) | 17-1 | First |
| | 286 | Praphullakumar Biswas (M) ... | 20-10 | Second |
| | | **Jessore Zila School.** | | |
| | 285 | Krishnagopal Sanyal ... | 19 6 | Third |
| | | **Narail Subdivisional H. E. School.** | | |
| | 287 | Narayankumar Bandyopadhya .. | 18 | Second |
| | | **Private Students.** | | |
| Jes. P. | 1 | Praphullakumar Pal ... | 18-3 | Second |
| | 3 | Binayendranath Sen ... | 16 3 | First |
| | | **Teachers.** | | |
| Jes. T. | 1 | Jogeschandra Majumdar ... | 16-10 | Third |
| | 2 | Babon Uddin Sirder .. | 23-10 | Third |
| | 3 | Shaikh Abdus Satter ... | 20-4 | Second |
| | | **Gokarna P. M. H. E. School.** | | |
| Kandi | 2 | Pramathanath Bandyopadhyay (m) ... | 16-9 | First |
| | 3 | Abdul Moktor ... | 20 | Second |
| | 4 | Nrisinhanath Ray ... | 19-6 | Second |
| | 7 | Bagelanandan Ghosh | 19 4 | Second |
| | | **Kandi Raj H. E. School.** | | |
| | 13 | Sachinandan Acharyya (m) ... | 17-1 | First |
| | 14 | Srischandra Adhikari (MLml) ... | 17-2 | First |
| | 15 | Krishnakumar Bandyopadhyay (m) ... | 16-6 | First |
| | 16 | Jnanendranath Bhattacharyya ... | 18-4 | First |
| | *17 | Sudhanwakumar Baral (MLml) ... | 17 3 | First. |
| | 18 | Abhibhushan Chaudhuri | 16-6 | First. |
| | 19 | Kalipada Das (m) ... | 16-1 | First. |
| | 20 | Adwaitachandra De (Mm) ... | 18-8 | First. |
| | *21 | Sripati Dhara (Mml) ... | 18 | First |
| | 22 | Abinaschandra Ghosh... | 18-7 | First |
| | 23 | Binaykrishna Ghosh (M) | 16-7 | First |
| | 24 | Nrityagopal Ghosh (m) | 18-10 | First |
| | 25 | Debendranath Chattopadhyaya ... | 16-7 | First. |
| | 28 | Gaurgopal Chakrabarti | 19-2 | Second. |
| | 29 | Pramathanath Bandyopadhyay ... | 16-1 | First |
| | 31 | Kangasrilal Bandyopadhyay ... | 18-9 | Third |
| | 32 | Jadugopal Bajpai ... | 17-9 | First. |

| Roll. | No | Name. | Age | Division in which the candidate has passed. |
|---|---|---|---|---|
| | | **Kandi Raj H. E. School**—*concld* | | |
| Kandi | 33 | Sudhirkrishna Majumdar (m) ... | 18 2 | Second |
| | 34 | Radhasyam Mandal (m) | 20-5 | First. |
| | 35 | Bireswar Mukhopadhyay ... | 16 | Second |
| | 36 | Sambhunath Mukhopadhyay ... | 21-9 | First |
| | 37 | Praphullakumar Pal ... | 18 | First |
| | 38 | Praphullakumar Ray (M m) ... | 18-6 | First. |
| | 39 | Satyakinkar Ray (m) | 22-1 | Second. |
| | 40 | Sibanath Ray ... | 17 | Third |
| | 41 | Shaikh Mozher (M) ... | 18-4 | First. |
| | 42 | Pramathanath Sinha (M) ... | 18 2 | First |
| | 43 | Rasmohan Sinha (ml) | 16-2 | First. |
| | 44 | Jitendranarayan Ray . | 18-4 | First. |
| | 45 | Harinarayan Ghosh hajra ... | 16-3 | Second |
| | 46 | Girijanath Mukhopadhyay ... | 16 | Second |
| | 47 | Nikhilchandra Mukhopadhyay .. | 17-1 | Second |
| | 48 | Dhirendranarayan Ray | 19-10 | Second. |
| | 49 | Pinakpani Raychaudhuri ... | 16-5 | First |
| | 50 | Bidhubhusan Sinha ... | 18-1 | First |
| | 51 | Bagalacharan Majumdar ... | 16-4 | First |
| | 52 | Aswinikumar Ray ... | 18 | Second |
| | 54 | Prabhakar Sarkhel ... | 18 3 | Second |
| | 55 | Ganesprasad Tribedi ... | 17-2 | First |
| | 56 | Mashiruddin Shaikh ... | 20-1 | Second |
| | 57 | Molla Robi Uddin Ahammed (L) ... | 17-8 | First |
| | | **Gulhatia H. E School.** | | |
| | 58 | Radhasyam Raybandyopadhyay ... | 19-1 | Second |
| | 60 | Eyadul Mondol (m) ... | 20-4 | First |
| | 61 | Ali Hossain ... | 18-10 | Second. |
| | | **Sijgram Hossenabad H. E. School.** | | |
| | 62 | Shaikh Quamaruddin ... | 20-8 | First. |
| | 64 | Khondker Mahammed Ali Mohsen ... | 16-10 | Second |
| | 65 | Khondaker Mohammed Ziaul Ahsan ... | 16-1 | First. |
| | 66 | Kazi Abdul Mokid ... | 16-10 | Second. |
| | 71 | Ramprasanna Chattopadhyay ... | 17-3 | Third |
| | 72 | Mahadeb De ... | 16-2 | Third |
| | 73 | Mahadeva Mistri ... | 22-3 | Second |
| | 74 | Manindranath De ... | 19-10 | First |
| | 75 | Asitaranjan Ghosh (m) | 16-2 | First |
| | | **Sanwaribad Maharaja's H. E. School.** | | |
| | 76 | Shaikh Mabakhar Hossain (m) ... | 18-8 | First |
| | 77 | Abinaschandra Das (Mm) ... | 19-5 | First |
| | 79 | Suryyapada Kundu (m) | 18-10 | First |
| | 80 | Gurupada Chandra ... | 17-9 | First |
| | 81 | Sailendrakumar Acharyya ... | 17-1 | Second |
| | 83 | Ramrenu Das ... | 19 | First |
| | 84 | Girijanath Mukhopadhyay ... | 17-2 | Second. |
| | 85 | Jogindrachandra Das | 20 4 | Second |
| | 86 | Umapada Panja ... | 20-1 | Second |
| | 87 | Jatilpada Ray ... | 20-1 | Second. |

| Roll. | No. | Name. | Age. | Division in which the candidate has passed |
|---|---|---|---|---|
| | | **Banwaribad Maharaja's H. E. School**—*concld* | | |
| Kandi | 88 | Brahmananda Chattopadhyay ... | 17 | Second |
| | 89 | Satyaban Mukhopadhyay ... | 20-6 | Third |
| | 90 | Sudhakar Misra ... | 19 | Second |
| | 91 | Sudhakrishna Bhattacharyya (MLVI) ... | 17-1 | First |
| | 13 | Debnarayan Mukhopadhyay ... | 18-5 | Second |
| | 94 | Charukrishna Ram ... | 16-3 | Second. |
| | 95 | Kapalibhusan Ray ... | 20-6 | Third |
| | | **Panchthupi T. N. Institution.** | | |
| | 96 | Shaikh Muhammad Nuruddin (Mm) ... | 20-1 | First |
| | 97 | Namdar Shaikh (Lm) | 20-3 | First |
| | 98 | Afzalar Rahim ... | 18 1 | Third |
| | 99 | Mir Abdul Karim ... | 17-11 | Second |
| | 100 | Karaliprasanna Sinha | 19 | Second |
| | 101 | Abinashchandra Sengupta .. | 18 5 | Second |
| | 102 | Radhakanta Saha ... | 18-7 | Third. |
| | 103 | Quazi Abdul Kabir ... | 16-3 | First |
| | 104 | Satyabrata Mukhopadhyay ... | 16-11 | First |
| | 105 | Dhirendrakrishna Ghosh ... | 18-10 | First |
| | 106 | Dharanidhar Ghosh ... | 17-4 | Third |
| | 107 | Sambhunath Dhar (Mm) ... | 16 7 | First |
| | 109 | Chandicharan Das ... | 22-2 | Second |
| | 110 | Kamalapada Chaudhuri (M) ... | 16-2 | First. |
| | 111 | Bimalakanta Chakrabarti ... | 18-6 | Second |
| | 112 | Sudhakar Baral (M) ... | 17-2 | First |
| | 115 | Sudarsan Acharyya ... | 17-2 | Second. |
| | 118 | Nangopal Chattopadhyay ... | 18-11 | Second |
| | 119 | Rudranarayan Chakrabarti (M) ... | 17-8 | First |
| | 120 | Radhagobinda Pal ... | 16-1 | First |
| | | **Contai H. E. School.** | | |
| | 121 | Chinmonan Sinha (m) | 16-8 | First |
| | | **Sufalakati H. E. School.** | | |
| Khu. | 1 | Nagendranath Pal (m) | 18-3 | First |
| | 2 | Rameschandra Basu | 16-9 | First |
| | 3 | Pijus kanti Gangopadhyay ... | 20-7 | Second |
| | 4 | Bijaykrishna Goldar ... | 16-5 | First |
| | 5 | Pramathanath Ash ... | 19 | Second |
| | 6 | Manindranath Chakrabarti ... | 20-11 | Second. |
| | 7 | Gurudas Pal ... | 18-6 | Second. |
| | 8 | Purnachandra Dattachaudhuri ... | 17-3 | First |
| | 9 | Abalakanta Ash ... | 17-2 | Second. |
| | 10 | Hridaynath Ash ... | 17-2 | Second |
| | 11 | Bijaybhushan Chakraharti ... | 17-8 | Second. |
| | 12 | Jaminibhushan Haldar | 25 | Second. |
| | | **Dhandia Union Institution.** | | |
| | 13 | Shaikh Rohamatullah... | 20-8 | Second |
| | 14 | Shaikh Eusaff Ali ... | 18-11 | Second |
| | 15 | Rabindranath Mukhopadhyay ... | 17-3 | First |

| Roll. | No. | Name. | Age. | Division in which the candidate has passed. |
|---|---|---|---|---|
| | | **Dhandia Union Institution**—*concld.* | | |
| Khu. | 16 | Jnanendranath Biswas | 18-3 | First. |
| | 18 | Adhirkrishna Mitra (m) | 17-1 | First. |
| | 19 | Sasadhar Das ... | 19-3 | Second |
| | 21 | Annadacharan Karmakar ... | 18-9 | Second |
| | 22 | Birendranath Ray ... | 16-4 | First |
| | 24 | Surendranath Ghoshsandily ... | 18-4 | Second |
| | | **Daibajnahati Biswesvar H. E. School.** | | |
| | 29 | Ahmad Shaikh (m) ... | 18 | First. |
| | 30 | Offaj Khan ... | 19-8 | Second |
| | 32 | Kaminikumar Guha (m) | 17-3 | First. |
| | 33 | Chandrasekhar Bhadra (m) ... | 16 | First |
| | 34 | Anthlyabhushan Kar ... | 18-4 | First |
| | 35 | Niranjanbhushan Biswas (m) ... | 17-3 | First. |
| | 36 | Muktinath Bhadra ... | 18-3 | First |
| | 37 | Muhammad Esmile Miah ... | 22-1 | Second |
| | | **Khalispur H. E. School.** | | |
| | 39 | Narendranath Das, I (Mml) ... | 17-1 | First. |
| | 40 | Panchanan Datta ... | 18-3 | First |
| | 41 | Hariprasad Das (Mm) | 17-7 | First |
| | 42 | Anandamohan Pal ... | 17 5 | Second |
| | 43 | Prabodhkumar Das ... | 18-1 | First |
| | 44 | Phanibhushan Nandi | 17-4 | Second |
| | 45 | Satischandra Das ... | 17-3 | Second |
| | 46 | Sambhunath Das ... | 18-1 | Second |
| | 47 | Mahendranath Das ... | 18-1 | Second |
| | 48 | Upendranath Bhaumik | 19 5 | Second |
| | 49 | Deobir Uddin Ahamed Shaikh ... | 18-1 | Second. |
| | 50 | Bhagabanchandra Das | 16-7 | Second |
| | 51 | Narendranath Das, III | 17 | Second |
| | 53 | Md. Abdul Aziz Shaikh | 22-2 | Second |
| | 54 | Abinaschandra Bhaumik .. ... | 16-8 | First |
| | 55 | Surendranath Raha (M) | 16-10 | First |
| | 56 | Krishnagopal Das ... | 18-8 | First |
| | 57 | Satulal Chattopadhyay | 20-2 | First |
| | 58 | Lalitkumar Pal ... | 16-1 | Second. |
| | 59 | Binodbihari Das ... | 17 | Second. |
| | 63 | Md. Rajjab Ali Khan | 17-6 | Second. |
| | 64 | Sheikh Abdul Hamid | 17-1 | First |
| | 66 | Shekh Shamsur Rahaman (MLm). | 17-11 | First |
| | 67 | Md Abdul Hamid Malla | 18-5 | Second. |
| | | **Kumira H. E. School.** | | |
| | 68 | Ajitnath Majumdar (Mml) ... ... | 19-1 | First. |
| | 69 | Hridaybhushan Majumdar ... ... | 16-4 | First. |
| | 70 | Jitendranath Pal ... | 18-5 | First |
| | 71 | Amulyakrishna Saha ... | 16-8 | First. |
| | 72 | Indubhushan Bandyopadhyay ... | 16-7 | First. |
| | 73 | Nripendranath Chattopadhyay ... | 18-6 | First. |
| | 74 | Harisankar Chakrabarti | 19-7 | First. |
| | 75 | Dhirendrakrishna Ghosh | 17-2 | First. |
| | 76 | Jatindranath Basu ... | 18-4 | First. |
| | 77 | Saratchandra Datta ... | 16 6 | First. |
| | 78 | Sibendranath Mitra ... | 18-7 | First. |
| | 79 | Ajitkumar Ghosh ... | 17-1 | First. |

| Roll. | No. | Name. | Age. | Division in which the candidate has passed. |
|---|---|---|---|---|
| | | **Ajagarah H. E. School.** | | |
| Khu. | 80 | Bamacharan Raychaudhury (m) ... | 16 | First |
| | 81 | Manoranjan Ghoshal .. | 17-2 | First. |
| | 82 | Kalidas Raha .. | 17 5 | Second. |
| | 84 | Pramathanath Ghoshal | 16-1 | First |
| | 85 | Bireswar Ghosh ... | 16-2 | First |
| | 86 | Jatindranath Ghosh ... | 16-3 | First |
| | 87 | Kalipada Chakrabarti ... | 17-10 | First |
| | 88 | Birendranath Raychaudhuri ... ... | 16-5 | First |
| | 89 | Ramaprasad Chakrabarti ... .. | 19-11 | Second |
| | 90 | Narendranath Mukhopadhyay ... | 17 4 | Second |
| | 92 | Nimaichand Biswas ... | 20 1 | Second |
| | | **Lakshmipasa D. C. Institution.** | | |
| | 93 | Manindranath Bandyopadhyay (Mm) ... | 17-3 | First |
| | 94 | Subrdchandra Bandyopadhyay ... | 17-3 | First |
| | 95 | Dinabandhu Chattopadhyay .. | 18-2 | First |
| | *98 | Brajendramohan Gangopadhyay (Mml) ... | 16-3 | First |
| | 99 | Kalidas Bandyopadhyay | 16-3 | Second |
| | 100 | Rabindranath Bandyopadhyay .. | 18-6 | First |
| | 101 | Pramathanath Chattopadhyay . | 16 8 | First |
| | 102 | Mohammad Kalander | 18 2 | Second |
| | 103 | Manindranath Mukhopadhyay ... | 19 | Second |
| | 104 | Girijakanta Sen ... | 21 7 | Third |
| | 105 | Sardar Abdul Amin .. | 18-4 | First |
| | 106 | Mir Abdul Mannaf ... | 21-2 | Third |
| | | **Itna H. E. School.** | | |
| | *108 | Jaygopal Bhattacharyya (MLml) ... | 18 5 | First |
| | 109 | Amulyakumar Basu (M) | 17 2 | First |
| | *110 | Gurudas Pathak (MLml) | 18 3 | First |
| | 111 | Rabindranarayan Guha (M) .. ... | 16-5 | First |
| | 112 | Jyotischandra De (Lml) | 17-7 | First |
| | *113 | Chunilal Mukhopadhyay (MLml) ... | 17-2 | First |
| | 114 | Pramathanath Sengupta | 19-1 | Second |
| | 115 | Nalinikanta Basu (M) | 16-9 | First |
| | 118 | Satischandra Dattagupta ... ... | 17-1 | First |
| | 120 | Binaykrishna Basu ... | 17 2 | First |
| | 121 | Birendranath Ray ... | 18 4 | First |
| | 123 | Ahammad Sarder ... | 20-3 | Second |
| | | **Magura H. E. School.** | | |
| | 124 | Abul Kasem Mahiuddin Ahmed (Mm) ... | 16 | First. |
| | 125 | Taherali Biswas (M) ... | 19-3 | First |
| | 126 | Abdul Hakim Khondkoker ... ... | 19-8 | First |
| | 127 | Sakhawat Hossain (MLml) ... ... | 17-3 | First |
| | 128 | Shaikh Tofazuddin (Mml) ... ... | 18-1 | First |
| | 129 | Munshi Abul Hasan ... | 20 | First |
| | 130 | Munshi Habibar Rahman ... | 17-11 | Second |
| | 131 | Arsadali Mir ... | 20-1 | First |
| | 132 | Manoranjan Sengupta | 16-8 | First |
| | 133 | Jyotiprasanna Sengupta | 18 | First |
| | 134 | Brajanath Bhattacharyya ... | 19-5 | First |

| Roll. | No. | Name. | Age. | Division in which the candidate has passed. |
|---|---|---|---|---|
| | | **Magura H. E. School—*concld*** | | |
| Khu. | 135 | Jitendranath Biswas ... | 16-8 | First |
| | 136 | Kshaunischandra Bhattacharyya (m) .. | 17-5 | First |
| | 137 | Surendranath Chaudhuri (Lm) .. | 17-5 | First |
| | 138 | Girindrachandra Dasgupta (Mml) ... | 17-1 | First. |
| | 139 | Sudhindranath Sengupta (Mm) ... | 20 | First |
| | 140 | Abanibhushan Sikdar (Mm) ... ... | 17-7 | First |
| | | **Raruli R. K. B. K. Harischandra Institution.** | | |
| | 141 | Amalchandra Ghosh (ML) ... .. | 16 1 | First |
| | 142 | Bhupatibhushan Bandyopadhyay (ml) .. | 17-2 | First |
| | 143 | Bhupendranath Haldar (m) ... .. | 20-2 | First |
| | 144 | Binaykrishna Chattopadhyay ... | 18 9 | Third |
| | 145 | Bishundas Mitra (Mm) | 19-1 | First |
| | 146 | Dhirendranath Basu (MVm) ... | 16-2 | First |
| | 147 | Haripada Bhattacharyya (m) ... | 18 1 | First |
| | 148 | Jatindranath Raychaudhuri ... | 18 6 | Second |
| | 149 | Khagendranath Basu .. | 21 | First |
| | 150 | Krishnalal Mukhopadhyay ... | 19-3 | Second |
| | 151 | Krishnadas Bhattacharyya (m) ... | 20-11 | First |
| | 152 | Matilal Das (m) . | 20 7 | First |
| | 153 | Nalinikanta Mitra ... | 16-6 | First |
| | 154 | Niranjankumar Ghosh | 16-1 | Second |
| | 155 | Narayanchandra Datta | 16 8 | First. |
| | 156 | Ranajit Chattopadhyay | 16 | First |
| | 157 | Sunilkanti Basu ... | 17-6 | Second |
| | 161 | Krishnadas Kar ... | 16-4 | First |
| | 162 | Rameschandra Biswas | 19 | Second |
| | 163 | Sailendranath Ghosh ... | 16 9 | First. |
| | | **Nakol R. C. Institution.** | | |
| | 164 | Quazi Abdul Matlib (m) | 20-7 | First |
| | 165 | Mollah Golam Rabbani | 22-1 | Third. |
| | 166 | Sasankabihari Mitra ... | 18-1 | First |
| | 167 | Narendranath Kundu | 17 1 | First |
| | 168 | Kshudiram Kundu ... | 16-4 | First |
| | 169 | Banamali Ray ... | 20 | Second. |
| | 170 | Aswinikumar Ghosh ... | 18 | First |
| | 171 | Nanigopal Acharyya ... | 21-2 | First |
| | 172 | Susilkumar Ghosh ... | 20-2 | Second |
| | | **Kalia R. H. E. School.** | | |
| | 173 | Susilkumar Dasgupta (Mm) ... ... | 16-1 | First. |
| | *174 | Kalipada Sen (MLml) | 16 4 | First |
| | 175 | Jitendranath Debiswas | 17 | First |
| | 176 | Khagendranath Saha (M) . ... | 16-3 | First. |
| | 177 | Harasbitkumar Dasgupta (m) ... | 17-2 | First |
| | 178 | Nanigopal Chakrabarti (V) ... .. | 20-1 | First |
| | 179 | Manimohan Chakrabarti (m) ... ... | 16 3 | First. |
| | 180 | Dhirendrakumar Sengupta (m) ... | 16-8 | First. |
| | 181 | Sasadhar Biswas ... | 18-11 | Second |

| Roll. | No. | Name. | Age. | Division in which the candidate has passed |
|---|---|---|---|---|
| | | **Kalia R. M. E. School**—*concld* | | |
| Khu. | 182 | Nanigopal Biswas (m) | 19-8 | Second |
| | 183 | Kalidas Bhattacharyya | 17-1 | First |
| | 184 | Debkumar Acharyya ... | 19 | Second |
| | 185 | Rajkumar Acharyya ... | 21 2 | Second |
| | 186 | Manindranath Horchaudhuri (m) ... | 16 7 | Second |
| | 187 | Bimaysankar Horchaudhuri ... ... | 18-2 | Second |
| | 188 | Upendranath Ray (I) ... | 16 | First |
| | 189 | Upendranath Ghosh ... | 16-11 | First. |
| | 190 | Nisikanta Raha ... | 18 3 | Second |
| | 191 | Sudhansukumar Dasgupta (V) ... | 16 | First |
| | 192 | Banamali Mukhopadhyay ... .. | 17 | Second. |
| | 193 | Mahendranath Bhattacharyya ... | 20 6 | Third |
| | 196 | Syed Abdur Rashid (MI) ... ... | 16-6 | First. |
| | 198 | Shamsuddin Ahmad Khan (Mm) .. | 16 | First |
| | 199 | S M Abdus Samad Mian ... ... | 18 | First |
| | 200 | Abdul Huque Khondaker ... ... | 22-10 | First |
| | | **Senhati High School.** | | |
| | 201 | Haridas Datta (Mml) | 16-8 | First |
| | 202 | Bhupendranath Mukhopadhyay (ML) .. | 17-2 | First |
| | 203 | Aswinkumar Ray ... | 17 | First |
| | 204 | Kalipada Ghosh (Mm) | 16-4 | First |
| | 205 | Bijaykumar Pundarik (Mm) ... ... | 18-7 | First |
| | 206 | Kalidas Sengupta (m) | 20 | First |
| | 207 | Sudhirkumar Bhattacharyya (m) ... | 18-2 | First |
| | 208 | Jitendramohan Chattopadhyay (m) ... | 16 4 | First |
| | 209 | Nagendranath Pal ... | 17 | First |
| | 210 | Praphullakumar Bhattacharyya ... | 17-7 | First |
| | 211 | Asutosh Chakrabarti (m) ... ... | 17 | First |
| | 212 | Buddhadeb Bhattacharyya .. | 17-11 | First |
| | 214 | Manoranjan Pal .. | 16-2 | First |
| | 215 | Susilchandra Sen ... | 18 | First |
| | 216 | Arabindabandhu Bhaumik .. ... | 16-7 | Second |
| | 217 | Syamapada Sen ... | 16-7 | First |
| | 218 | Abdul Aziz Shaikh ... | 17-2 | Second |
| | 219 | Sasadhar Acharyya ... | 20 | Second |
| | 220 | Bidyutkumar Sengupta | 16 | First |
| | 221 | Manindranath Dasgupta (H) .. ... | 16-2 | First |
| | 222 | Nisikanta Chakrabarti | 20-4 | Third |
| | 223 | Nalinikanta Ghosh ... | 18 | Second |
| | 225 | Sankarnath Chakrabarti | 18-2 | First |
| | 226 | Ali Akbor Molla ... | 19-1 | Third |
| | 227 | Amiyabhushan Sengupta... ... | 18-10 | Second. |
| | | **Palgram Kasba H. E. School.** | | |
| | 228 | Manimohan Bhattacharyya ... | 16-2 | First. |
| | 230 | Haripada Chattopadhyay ... ... | 17-4 | Third |
| | 232 | Ahamadali Mollah ... | 17-9 | Second. |
| | 233 | Simarajitkumar Mukhopadhyay ... | 19 | First. |

| Roll. | No. | Name | Age. | Division in which the candidate has passed. |
|---|---|---|---|---|
| | | **Paina Academy, Jessore.** | | |
| Khu. | 234 | Surendranath Ghosh ... | 22-11 | Second. |
| | 235 | Sibaprasad Sikdar ... | 19-3 | First. |
| | 236 | Nagendranath Biswas | 20-10 | Second |
| | 240 | Kantibhushan Das ... | 17-4 | First |
| | | **Dhandia Union Institution.** | | |
| | 241 | Jitendranath Chattopadhyay .. | 18-8 | Second |
| | 242 | Tamijuddin Mollah ... | 20-7 | Third |
| | | **Baruipara P. C. Institution.** | | |
| | 243 | Bhushanbihari Das .. | 18 4 | First. |
| | 244 | Haripada Nandi ... | 16 11 | First. |
| | 245 | Hemantakumar Mukhopadhyay ... | 19 | First |
| | 246 | Jyotishchandra Sadhu | 17 | First |
| | 247 | Mahendranath Rajbansi | 17-2 | First |
| | 248 | Sibendranath Chattopadhyay ... | 21-11 | First |
| | 249 | Sudhirkumar Sengupta (Mm) .. | 16 2 | First |
| | 250 | Surendranath Ghosh (Mm) ... | 17 | First. |
| | 251 | Animadhab Gangopadhyay ... | 17 3 | First |
| | 252 | Jatindranath Basu ... | 18 | Second |
| | 253 | Matilal Mukhopadhyay | 18 6 | Third |
| | 254 | Praphullakumar Bhattacharyya .. | 17-9 | First. |
| | 255 | Satischandra Bandyopadhyay ... | 22 3 | Third |
| | | **Khasiai H. E. School.** | | |
| | 256 | Manoranjan Basu .. | 20 | Second |
| | 260 | Manmathanath Biswas | 19-10 | Second |
| | | **Khulna Zilla School.** | | |
| | *262 | Susirkumar Sengupta (MVIII) ... | 16 4 | First |
| | *263 | Sachindramohan Sen (MmG) ... | 16 9 | First. |
| | 264 | Kalipada Biswas (Ll) . | 18-4 | First |
| | 265 | Praphullakumar Basu (m) ... | 16-4 | First. |
| | *266 | Gopeswar Chakrabarti (Mm) ... | 16-3 | First. |
| | 267 | Gopalchandra Bhaumik | 17 3 | First. |
| | 268 | Bhabaniprasad Sen (Mm) ... | 16-5 | First |
| | 269 | Syed Solaiman Aly ... | 16-9 | Second |
| | 270 | Abdus Sobhan ... | 18-3 | First. |
| | | **Khulna B. K. Union Institution.** | | |
| | 271 | Anathbandhu Basu ... | 16-8 | First |
| | 272 | Ajitkumar Basu (m) ... | 16-11 | First |
| | 273 | Srischandra Dalal ... | 16 | First. |
| | | **Tala B. De Institution.** | | |
| | 274 | Anantakumar Basu ... | 20-1 | First |
| | 275 | Jitendranath Basu ... | 21 | Third. |
| | 276 | Manindrakumar Chandra (M) ... | 18-4 | First. |
| | 277 | Jitendrakisor Dalal ... | 18-3 | First. |
| | 278 | Manmathanath Kar ... | 17 1 | Second |
| | 281 | Kantacharan Bhattacharyya ... | 19-1 | Second. |
| | 283 | Moral Ershadali ... | 16-5 | Third. |

| Roll. | No. | Name. | Age | Division in which the candidate has passed. |
|---|---|---|---|---|
| | | **Khulna B. K. Union Institution.** | | |
| Khu. | 285 | Jitendranath Bhaumik | 16-1 | First |
| | 286 | Rajendranath Dasgupta | 19 | First |
| | 287 | Kshitindranath Ghosh | 17-2 | First |
| | 288 | Knagendranath Pal ... | 19 | Second |
| | 289 | Haridas Ghosh ... | 17-10 | Second |
| | 290 | Sudhirendranath Sengupta ... | 19 | Second |
| | 296 | Khan Golzar Ali . | 21 9 | Third |
| | 297 | Surendranath Das . | 18 8 | Second |
| | 298 | Ambunath Basu ... | 16-2 | Third |
| | 299 | Ganeschandra Ghosh | 16 3 | Second |
| | 300 | Bishnuchandra Baragi | 20 1 | Second |
| | *302 | Mihirkumar Sarkar (MVIG) . | 17 7 | First |
| | 303 | Kalipada Bhattacharyya .. | 16-6 | First |
| | 304 | Nalininath Bandyopadhyay ... | 22-4 | First |
| | 305 | Jagajyoti Sengupta ... | 16-1 | First |
| | 306 | Kisorimohan Das ... | 16-7 | First |
| | 307 | Adharchandra Biswas (M) .. | 18-1 | First |
| | 308 | Surendranath Majumdar (Mm) .. | 19 4 | First. |
| | 309 | Anilkumar Ghosh, I | 16-6 | Second |
| | 311 | Pramathanath Ghoshal | 18-2 | Second |
| | 312 | Bamacharan Sinha ... | 20 9 | Second |
| | 313 | Amulyakumar Ghosh | 17 2 | Second |
| | 320 | Ismail Shaikh | 16-8 | First |
| | 321 | K M Rowshan Ali (m) | 16 1 | First |
| | 322 | Azizar Rahman Khan (M) .. | 17-1 | First |
| | 324 | Abbas Ali Shaikh . | 22 10 | First |
| | | **Phultala Re-Union H. E. School.** | | |
| | 325 | Bipannapalak Basu (Mm) .. | 16 | First |
| | 326 | Dhirendranath Ghosh | 17 | First |
| | 327 | Kiranchandra Majumdar ... | 17-10 | First |
| | 328 | Binalchandra Mitra (M) | 16 | First |
| | 329 | Binodbihari Nandi (m) | 17-2 | First |
| | 330 | Nakuleswar Sen ... | 17 | First |
| | 331 | Praphullakumar Sen (M) ... | 16 4 | First |
| | 332 | Ramendranath Sen .. | 17-7 | Second. |
| | 333 | Jaminibhushan De ... | 16 | First |
| | 334 | Jaminibhusan Datta ... | 21-2 | Second |
| | 335 | Nirmalkumar Ghosh ... | 17 5 | First |
| | 336 | Rakhaldas Ghoshal ... | 17-11 | Second |
| | 337 | Krishnapada Saha ... | 17 | First |
| | 338 | Kamaleschandra Sarkar (M) ... | 16-2 | First |
| | | **Khulna K. M. S. C. Institution.** | | |
| | 340 | Amarkrishna Basu ... | 20 | Second |
| | 341 | Narendranath Basu .. | 18-5 | Second |
| | 342 | Binaykrishna Bhattacharyya (m) ... | 17-1 | First. |
| | 344 | Bishnupada Mandal ... | 21-1 | First |
| | 346 | Sripatinath Mitra ... | 18-2 | First |
| | 347 | Ganeschandra Pal ... | 20-4 | Third. |
| | 348 | Sibnath Sarkhel (m) ... | 18-3 | First |
| | 349 | Dhirendranath Bhadra | 19-3 | First |
| | 350 | Nisikanta Chattopadhyay ... | 17-5 | Second |
| | 351 | Abanibhushan Raychaudhuri ... | 16 6 | Third |
| | 352 | Khagendranath Bandyopadhyay ... | 20 | First. |
| | 353 | Santilal Bandyopadhyay ... | 20-11 | First |
| | 357 | Jatindranath Raychaudhuri ... | 17-6 | Second. |

| Roll. | No. | Name | Age | Division in which the candidate has passed |
|---|---|---|---|---|
| | | **Bahirdia High School.** | | |
| Khu. | *358 | Charuchandra Chattopadhyay (MLirl) ... | 17 10 | First |
| | 359 | Hemlal Ghosh (Mm) ... | 16-11 | First |
| | 360 | Bipinbihari Haldar ... | 17-7 | First |
| | 361 | Nirupam Mitra (Mm) | 16-11 | First |
| | 362 | Surendranath Bandyopadhyay ... | 22 2 | First |
| | 363 | Narendranath Basu ... | 18-8 | First |
| | 364 | Nisikanta Basu . | 18 4 | First |
| | 365 | Kalidas Chattopadhyay (H) .. .. | 18 | First |
| | 366 | Harashit Datta .. | 20 4 | First |
| | 367 | Sisirkumar Ghosh | 16 3 | First |
| | 368 | Charuchandra Mukhopadhyay . | 22-3 | Second |
| | 369 | Surendranath Pal | 22 3 | First |
| | 370 | Asitkumar Ray ... | 17-6 | Second |
| | | **Khulna Zila School.** | | |
| | 371 | Jagannath Misra ... | 16-8 | First |
| | 372 | Panchanan Dharmajumdar ... | 18 3 | First |
| | 373 | Pulinbihari Gupta .. | 16 2 | Second |
| | 374 | Mrinalkanti Mukhopadhyay (m) .. | 16-1 | First |
| | 375 | Chupendranath Basu raychaudhuri (Mm) | 16 3 | First. |
| | 376 | Madanmohan Maulik | 17-4 | First |
| | 377 | Nareschandra Chattopadhyay (m) . | 16 1 | First |
| | 378 | Arabinda Ghosh | 17 10 | Second |
| | 379 | Kasiswar Chakrabarti | 18 | Second |
| | 380 | Kamaleschandra Sen | 18 7 | Second |
| | 381 | Sridhar Chattopadhyay | 16 5 | First |
| | 382 | Kshitindranath Biswas | 17-4 | Second |
| | 383 | Md Abdul Khalique | 19 | Second |
| | 384 | Niradbandhu Bhattacharyya .. | 17 5 | Second |
| | 385 | Pankajbandhu Raychaudhuri ... | 17-5 | First |
| | 386 | Niharbhushan Mukhopadhyay ... | 17 2 | Second. |
| | 387 | Mominuddin Shaikh ... | 19-1 | Third |
| | | **Gopinathpur H. E. School.** | | |
| | 388 | Emaruddin Biswas ... | 23 | Third |
| | 389 | Altaf Hossain Kazi ... | 19 8 | Second |
| | 390 | Afsaruddin Ahammed | 19-6 | Third |
| | 393 | Hiralal Basu (m) ... | 17-1 | First |
| | 394 | Rajanikanta Mandal ... | 19 8 | Second |
| | 395 | Rashbihari Biswas ... | 19-6 | Second |
| | 396 | Harabilas Majumdar (m) ... ... | 19 7 | First. |
| | 398 | Mahendranath Mandal | 16 6 | Second |
| | 401 | Abinaschandra Biswas | 18 1 | Second |
| | 403 | Gaurchandra Malakar | 20 8 | Second |
| | | **Naihati Union Institution.** | | |
| | 406 | Binaykumar Bandyopadhyay ... | 17 2 | First |
| | 409 | Bijaylal Chattopadhyay . | 22-8 | First. |
| | 410 | Manindranath Mitra ... | 21-1 | First |
| | 411 | Kiranchandra Mukhopadhyay (m) ... | 19 | First |
| | 412 | Manindranath Basu ... | 18 10 | First |
| | 413 | Kaliprasad Mitra .. | 19-11 | Second |
| | 414 | Habibar Rahaman Shaikh ... | 18-5 | Second |
| | 416 | Nagendranath Ghosh | 25-9 | Third. |

| Roll. | No. | Name. | Age | Division in which the candidate has passed |
|---|---|---|---|---|
| | | **Khulna Zila School.** | | |
| hu. | *417 | Samarendranath Ray (MinH) ... | 16 2 | First |
| | | **Miksimili R. H. E. School.** | | |
| | 419 | Jagannath Mandal (m) | 19 6 | First |
| | 420 | Manindrabhushan Mitra .. | 19 7 | Third |
| | 421 | Nimaichand Ghosh ... | 16 11 | First |
| | 422 | Hridyanath Ghosh (Mm) .. ... | 16-11 | First |
| | 423 | Manilal Sarkar ... | 19-2 | Second |
| | 424 | Sudhirkumar Ghosh .. | 18-2 | Second |
| | 425 | Tarapada Chakrabarti | 22-6 | Third |
| | 426 | Brikodar Haldar ... | 18-3 | Second |
| | 427 | Baidyanath Mitra ... | 18-11 | Second |
| | 428 | Bhubanmohan Majumdar ... ... | 17-11 | Third |
| | 429 | Pasupati Ghosh ... | 17-2 | Second |
| | 430 | Jibankrishna Bhattacharyya ... | 19-9 | Second |
| | 432 | Jogendranath Mandal | 20-10 | Third |
| | 433 | Nanigopal Mitra ... | 16-4 | Second |
| | | **Nawapara G. C. H. E. School (Khulna).** | | |
| | 434 | Amulyakanti Bandyopadhyay (MLl) ... | 16-9 | First |
| | 435 | Indubhushan Chattopadhyay (Mm) ... | 19-3 | First. |
| | 436 | Dhirendranath Basu (m) ... ... | 18-1 | First |
| | 437 | Manoranjan Basu ... | 17-3 | Second |
| | 438 | Nanigopal Basu ... | 19-7 | First |
| | 439 | Anadinath Deb ... | 17-7 | First. |
| | 440 | Amulyakumar Ghosh | 17 | First |
| | | **Kalia R. H. E. School.** | | |
| | 441 | Sudhansukumar Sen gupta (m) ... | 19 | First |
| | 442 | Sanyasicharan Biswas | 19-3 | First |
| | 443 | Syed Talattut Ali (m) | 16-3 | Second |
| | 444 | Bimalchandra Sengupta ... ... | 16 | First |
| | | **Patna Academy.** | | |
| | 445 | Jyotischandra Ray ... | 20-7 | Second |
| | 446 | Kamalkrishna Ray (Mml) ... | 16-4 | First |
| | 447 | Dwijabar Biswas ... | 20-3 | Third |
| | | **Dighalia K. D. R. K. Union Institution.** | | |
| | 448 | Sudhirkumar Basu ... | 19-4 | First |
| | 449 | Narendranath Basu (l) | 17-11 | First |
| | 450 | Nagendranath Datta (m) ... .. | 18 | First |
| | 451 | Santoshkumar Chakrabarti ... ... | 16-2 | First. |
| | 452 | Bijanbihari Basu ... | 16-1 | Second |
| | 453 | Bhupendranath Raha. . | 21-6 | Second |
| | 454 | Nirmalchandra Bandyopadhyay ... | 17-3 | Second |
| | 455 | Bimalkrishna Sarkar (m) ... ... | 16-10 | First. |
| | 456 | Amaresechandra Basu | 18-6 | First. |
| | 457 | Sudhirchandra Ghosh (lH) ... ... | 16-5 | First |

| Roll. | No. | Name. | Age. | Division in which the candidate has passed. |
|---|---|---|---|---|
| | | **Naidha H. E. School.** | | |
| Khu. | 458 | Shaikh Eusafali ... | 19 | Second |
| | 459 | Shaikh Ajaher ... | 21-7 | Second |
| | 460 | Anantakumar Bandyopadhyay ... | 17 | First |
| | 461 | Surajananda Raha ... | 18-2 | Second |
| | 466 | Phanibhushan Raychaudhuri ... | 19 | Third. |
| | | **Khalispur H. E. School.** | | |
| | 468 | Ramendrakumar Datta | 17-2 | Second |
| | 469 | Surendranath Datta ... | 17-2 | Second |
| | 470 | Sudhansubhushan Das | 18-1 | Third |
| | | **Daulatpur H. E. School.** | | |
| | 471 | Bijaykumar Bandyopadhyay ... | 16 5 | First |
| | 472 | Nanigopal Majumdar (MLml) ... | 16-1 | First |
| | 473 | Jatindranath Bandyopadhyay ... | 17-9 | First |
| | 474 | Sachischandra Chattopadhyay ... | 18-5 | First |
| | 475 | Jagannath Ghosh (m) | 17-1 | First |
| | 476 | Abanikumar Sengupta (M) ... ... | 17-8 | First |
| | 477 | Kalidas Bhattacharyya | 16-11 | First |
| | 478 | Ramanath Chattopadhyay ... | 16-6 | First |
| | 479 | Satischandra Das ... | 18-1 | Second |
| | 480 | Binodbihari Das ... | 21-9 | Second |
| | 482 | Kalidas Raychaudhuri | 18-6 | Second |
| | 483 | Md Eusof Shaikh ... | 17-10 | Second |
| | 484 | Khan Jassore Ali ... | 16 7 | First. |
| | 485 | Golam Rasul Shaikh ... | 16-2 | First |
| | 486 | Khan Mohammad Nural Haque (l) ... | 19-10 | First. |
| | 487 | Md Mahamud Ali Malik (L) ... | 16-11 | First. |
| | | **Khararia H. E. School.** | | |
| | *488 | Kalidas Bandyopadhyay (MLm) ... | 17-11 | First |
| | 489 | Kesablal Chakrabarti (MLml) ... | 19-10 | First |
| | 490 | Sitanath Chakrabarti ... | 18 | First |
| | 491 | Lalitmohan Datta .. | 18-6 | First |
| | 492 | Birendranath Ghosh ... | 18-1 | First |
| | 493 | Sachindrakumar Raychaudhuri ... | 18-11 | Second. |
| | 494 | Amarendranath Raychaudhuri ... | 17-10 | Second. |
| | 495 | Satyendranath Raychaudhuri ... | 20-2 | Second. |
| | 496 | Ranajitkumar Sengupta (m) ... | 17 | First. |
| | 497 | Susilchandra Sengupta (Mm) ... ... | 16-3 | First. |
| | 499 | Kshitischandra Sengupta (m) ... | 16-4 | First. |
| | 500 | Nisikanta Dasgupta ... | 17-5 | First |
| | 501 | Nalinranjan Datta ... | 23-5 | Second. |
| | 502 | Jagadischandra Raychaudhuri ... | 16-1 | Second. |
| | 503 | Ramlal Basu ... | 17 | Second. |
| | 504 | Sudhirkrishna Basu (M) ... ... | 16-2 | First |
| | 505 | Madhusudan Chakrabarti ... ... | 20 | Second. |
| | 506 | Bimalkumar Datta ... | 17 1 | First. |
| | 507 | Sudhirchandra Ghosh | 16-11 | First. |

| Roll. | No. | Name. | Age. | Division in which the candidate has passed. |
|---|---|---|---|---|
| | | **Khararia H. E. School**—*contd* | | |
| Khu. | 508 | Chittaranjan Kar ... | 16 | First. |
| | 509 | Hiralal Khan ... | 19-6 | Second. |
| | 510 | Anathbandhu Ray ... | 18-3 | First |
| | 511 | Binaybhushan Raychaudhuri ... | 17 | Second. |
| | 512 | Phanibhushan Datta ... | 17-7 | First |
| | 513 | Natabar Ray ... | 16-4 | Third. |
| | 515 | Mahammad Mobarok | 16-2 | First |
| | 516 | Shaikh Raihanuddin ... | 18-4 | Second |
| | 518 | Abdus Sadir Khundker (M) ... ... | 16-7 | First |
| | | **Phultala Re-Union H. E. School.** | | |
| | 521 | Sunilkumar Ray ... | 16-4 | Second |
| | | **Khulna K. M. S. C. Institution.** | | |
| | 522 | Durgadas Lahiri ... | 16-7 | First |
| | | **Khalispur H. E. School.** | | |
| | 523 | Jagadischandra Sur ... | 21 | First |
| | | **Private students.** | | |
| Khu. P. | 1 | Sarojranjan Ray ... | 20 6 | Second |
| | 2 | Matilal Chattopadhyay | 25 6 | First |
| | 3 | Nakulchandra Guha ... | 23 3 | Second |
| | | **Teacher.** | | |
| Khu. T. | 1 | Priyanath Chakrabarti | 24 3 | Second |
| | | **Banagram Anandakishor H. E. School.** | | |
| Kish. | 1 | Phanindrakumar Majumdar ... | 16-5 | First |
| | 2 | Dwijendramohan Kar | 18 4 | First |
| | 3 | Haridayal Banik ... | 18-1 | Second |
| | 4 | Upendranath Sen ... | 17-4 | First. |
| | 5 | Isanchandra Nath ... | 18-2 | Second. |
| | 7 | Nagendrachandra Bhaumik ... | 17-7 | First |
| | 8 | Manindrachandra Datta | 17-3 | First |
| | 9 | Parimalchandra Deray | 16-9 | Second |
| | 10 | Aswinikumar Dhar ... | 19 3 | Second. |
| | 11 | Nagendrachandra Topdar ... | 17-1 | Second. |
| | 12 | Nareschandra Chakrabarti ... ... | 18-2 | Second |
| | 13 | Rameschandra Sarkar | 17-1 | Second |
| | 14 | Kaminikanta Nath .. | 20 6 | Second |
| | 15 | Purnachandra Saha ... | 20-11 | Second |
| | 16 | Hirendrakumar Majumdar ... ... | 16-3 | Second. |
| | 17 | Sasikumar Mali ... | 18-1 | Third. |
| | 21 | Narendrachandra Acharyya ... | 19 | Second. |
| | 22 | Ahmad Hussain ... | 18-11 | Second. |
| | 23 | Md. Maijuddin (Lin) ... | 17-3 | First. |
| | | **Kishorganj Azimuddin H. E. School.** | | |
| | 29 | Mahammed Zainuddin | 19-7 | Third. |
| | | **Kodalia S. I. H. E. School.** | | |
| | 31 | Md Abdul Hamid ... | 24-2 | Second. |
| | 33 | Erfunuddin Ahamed ... | 17-11 | Second |
| | 34 | Mazid Uddin Khan ... | 17-6 | Second. |
| | 38 | Md. Abdul Habib Khan | 18-1 | First. |
| | 42 | Md. Amir Hussain ... | 17-10 | Third. |

| Roll. | No. | Name. | Age. | Division in which the candidate has passed. |
|---|---|---|---|---|
| | | **Hussainpur Sambhu Chandra High School.** | | |
| Kish. | 45 | Sisirranjan Basu ... | 22-3 | Second. |
| | 46 | Sisirranjan Dattaray ... | 16-7 | First |
| | 47 | Sudhindranarayan Chaudhuri ... | 17-1 | Second |
| | 48 | Radhakamohan Kar ... | 21-7 | First |
| | 49 | Phanindrachandra Bhattacharyya ... | 16 1 | First |
| | 50 | Sriskumar Majumdar ... | 16-11 | First. |
| | 51 | Dhirendranath Ray .. | 17 4 | First |
| | 52 | Syed Abdul Wahab ... | 18-4 | Second |
| | 53 | Ahammed Husain ... | 18-1 | Third |
| | 54 | Ahmuddin Ahmad ... | 22-10 | Second |
| | 55 | Mohammad Hashen Ali | 18-4 | Second |
| | 57 | Sheikh Jabed Ali ... | 22-1 | Third |
| | 58 | Safir Uddin Bhuya ... | 20-1 | Second |
| | | **Iswarganj Bisweswari H. E. School.** | | |
| | 59 | Himansubhushan Ray (m) ... ... | 18-10 | First |
| | 60 | Manomohan Chattopadhyay ... | 18-8 | Second |
| | 61 | Jatindramohan Das ... | 18-5 | First |
| | 62 | Pinayendramohan Chaudhuri (Mml) ... | 16 | First |
| | 63 | Sudhendukumar Ray ... | 20-3 | Second |
| | 64 | Jogeschandra Desarkar | 22-8 | First |
| | 65 | Debidas Bagchi . | 16 | Second. |
| | 66 | Kaminikumar Karray (Ml) ... | 17-9 | First. |
| | 67 | Nikhilranjan Ray (m) | 16-3 | First |
| | 68 | Birendrachandra Chakrabarti (m) ... | 16-9 | First |
| | 75 | Md Abdur Rahman ... | 18-1 | Second |
| | 77 | Md Abdul Hakim Bhuya .. | 16-2 | Third |
| | 78 | Jamiruddin Ahmed ... | 17 | Second |
| | | **Kisorganj Azimuddin H. E. School.** | | |
| | 79 | Surendrachandra Datta (Mml) ... | 16-4 | First. |
| | 80 | Sudhirchandra Biswas (l) .. ... | 16 9 | First |
| | *81 | Sudhansukumar Barman (MLml) .. | 17-6 | First. |
| | 82 | Bipinchandra Namadas (ml) ... ... | 17-3 | First. |
| | 83 | Mokshadaranjan Dhargupta (ml) ... | 18-5 | First. |
| | 84 | Jnanchandra Sen ... | 18-1 | First |
| | 85 | Pareschandra Sadhya (m) ... ... | 16-2 | First |
| | 88 | Nisikanta Majumdar ... | 19-1 | Second |
| | 89 | Upendrakumar Ukil ... | 18 1 | Second |
| | 90 | Satischandra Datta ... | 24 | Second. |
| | 93 | Matiranjan Ray ... | 17 10 | Second |
| | 97 | Birendrakumar Biswas | 16-11 | First |
| | 98 | Binalendubhushan Sinhachaudhuri ... | 18 | First |
| | 99 | Nareschandra Guptachaudhuri ... | 16 | First. |
| | 100 | Jogeschandra Rauth ... | 19-6 | Third |
| | 101 | Abinaschandra Gupta | 18 | First |
| | 102 | Jaynath Ghosh ... | 20-8 | Second. |
| | 103 | Dineschandra Ukil ... | 17 3 | Second. |
| | 104 | Sukumar Chaudhuri ... | 17-7 | Second. |
| | 105 | Sibendramohan Chaudhuri ... ... | 21-1 | First |
| | 106 | Sudhansukiran Ray ... | 17-8 | First |
| | 107 | Jitendramohan Goswami ... ... | 16 | Second |
| | 108 | Rajatnath Chattopadhyay ... ... | 18-1 | Second. |

| Roll. | No. | Name. | Age. | Division in which the candidate has passed |
|---|---|---|---|---|
| | | **Kisorganj Azimuddin H. E. School**—*concld* | | |
| Kish. | 110 | Sudhirchandra Majumdar ... ... | 19 | Second |
| | 111 | Aswinikumar Patranabis ... ... | 16-4 | Second |
| | 114 | Shaikh Muhammad (L) | 16-1 | First. |
| | 115 | Md Abdul Latif ... | 21-7 | Third |
| | 116 | Abdul Hashem ... | 18 2 | First |
| | 117 | Md Sahadulla Bhuyana | 22-1 | Second |
| | 118 | Md Abdul Kadir (m) | 19 2 | First |
| | | **Bhairab H. E. School.** | | |
| | 119 | Sitalkanta Das ... | 18 1 | First |
| | 120 | Altaf uddin Ahmed ... | 16 | First |
| | 121 | Abdus Sadeque (Lm) | 16 2 | First |
| | 123 | Sayed Lal Ahamed .. | 19 1 | Second |
| | 127 | Ramzuddin Ahmed .. | 18 7 | Second |
| | | **Bajitpur H. E. School.** | | |
| | *130 | Jogeschandra Saha (MLml) ... | 18-2 | First. |
| | *131 | Aswinikumar Bhattacharyya (MLVml) | 17-3 | First |
| | 132 | Jatindrachandra Sutradhar (Ll) ... | 18 | First |
| | 133 | Sarbananda Karmakar | 17-3 | Second |
| | 134 | Pratulchandra Pal (m) | 17-1 | First |
| | 135 | Manomohan Ray ... | 20 8 | First |
| | 136 | Nabendu Dattamajumdar (m) ... | 16-1 | First |
| | 138 | Hemchandra Das ... | 18 8 | First |
| | 139 | Rajmohan Chakrabarti | 19 5 | Second |
| | 140 | Anukulchandra Saha | 20 6 | Second |
| | 141 | Sudhansukumar Chakrabarti ... | 16-3 | First |
| | 142 | Manindrakumar Chakrabarti . | 16-3 | Second |
| | 145 | Rajanikanta Chandra | 21-10 | Second |
| | 146 | Bidhubhushan Das . | 19-8 | First |
| | 147 | Pareschandra Ray ... | 18-2 | Second |
| | 148 | Rameschandra Saha ... | 16-2 | First |
| | 149 | Abdur Razzaque (L) ... | 16 8 | First |
| | 151 | Zillar Rohman ... | 16-7 | First |
| | 153 | Abdul Rekman ... | 18 2 | First |
| | | **Sandikona H. E. School.** | | |
| | 156 | Sachindramohan Nandi (Ll) .. | 20 11 | First |
| | 157 | Krishnakumar Talukdar .. | 18 | First |
| | 160 | Surendrachandra Das | 21 4 | Third |
| | 162 | Jatindranath Bagchi | 17-11 | First. |
| | 163 | Kamalea Bhattacharyya .. | 16-1 | Second |
| | 164 | Jitendrachandra Ukil | 19 2 | Third |
| | 166 | Praphullachandra De | 20-7 | Third |
| | 167 | Md. Abdul Hussain Bhuyan ... | 20 1 | Third |
| | 169 | Md. Nawab Uddin ... | 16 2 | First |
| | 172 | Md Shaheb Ali .. | 23 | Second |
| | 173 | Md. Ali Newaz Bhaya | 20-1 | Second |
| | | **Kishorganj H. E. School.** | | |
| | 178 | Bhupendranath Guha | 18 | Third |
| | *180 | Md. Sulaiman (MLm) | 17-3 | First |
| | *181 | Sudhansubhushan Dattaray (Vml) ... | 16 3 | First. |
| | 182 | Pareschandra Majumdar (ml) ... | 17-2 | First. |
| | | **Kishorganj H. E. School**—*concld* | | |
| Kish. | 183 | Ramanimohan Ray (m) | 18 5 | First. |
| | 184 | Anilchandra Sen (V m) | 16-7 | First |
| | 185 | Sureschandra Dhar (m) | 17-10 | First |
| | 186 | Praphullakumar Bhaumik (l) ... | 16-1 | First |
| | 187 | Kshitischandra Biswas (Mm) ... | 17-11 | First |
| | 188 | Hemendrakisor Sarkar (m) ... | 17-7 | First |
| | 189 | Hiranmay Chaudhuri (M) ... | 19-1 | First. |
| | 190 | Nisikanta Bhushan (m) | 16 | First. |
| | 191 | Girischandra Datta ... | 17-1 | First. |
| | 192 | Bidhubhushan Chakrabarti (m) ... | 17 | First |
| | 193 | Sudhirchandra Ray (m) | 18-2 | First |
| | 194 | Sitansuranjan Ray ... | 17-1 | First |
| | 195 | Birendranarayan Ghosh | 17 | First. |
| | 196 | Niharranjan Majumdar (L l) .. | 16-7 | First. |
| | 197 | Narendrachandra Sarkar ... | 17-6 | First. |
| | 198 | Dhirendrachandra De | 17 | Second |
| | 199 | Abanikanta Bhattacharyya ... | 16-9 | Second. |
| | | **Kishorganj Ramananda H. E. School.** | | |
| | 202 | Pratapchandra Kapali | 20 | Third |
| | 205 | Jatindrachandra Bhattacharyya ... | 19 8 | Second |
| | 207 | Madhusudan Bhattacharyya ... | 17-1 | First |
| | 208 | Harchandra Saha (m) | 17-7 | First. |
| | 209 | Bhupatikumar Goswami ... | 18-4 | First |
| | 211 | Satyaranjan Raykanungo ... | 21 | Second |
| | 212 | Abanikumar Ray ... | 19-1 | First |
| | *213 | Purnendubhushan Chaudhuri (MLml) ... | 16-3 | First |
| | 214 | Upendrachandra Saha (Mm) ... | 17-1 | First |
| | 215 | Dwijendranath Chakrabarti (ml) ... | 16-9 | First. |
| | 216 | Sudhirchandra Bhattacharyya, l ... | 16 3 | Second |
| | 217 | Bhupatikumar Das ... | 22-10 | Third |
| | 218 | Saileschandra Karmajumdar ... | 17-2 | Third |
| | 219 | Birendrakumar Chakrabarti ... | 18-1 | Second. |
| | 220 | Murarimohan Datta ... | 19-7 | Second. |
| | 225 | Md. Abdul Moula ... | 17-4 | Second |
| | 226 | Md. Afsoruddin ... | 18 | Second |
| | | **Kishorganj H. E. School.** | | |
| | 227 | Md. Abdul Khaleque ... | 17-1 | First. |
| | 228 | Mahammad Jubed Ali | 21-1 | Second. |
| | 230 | Md Abdus Somed ... | 19 3 | Second. |
| | 231 | Md. Elas Uddin ... | 17-6 | Third. |
| | 234 | Subodhchandra Dattaray ... | 18-2 | Second. |
| | 235 | Rukminikanta Bhattacharyya ... | 18 1 | Second. |
| | 236 | Hemchandra Biswas ... | 18-6 | Second. |
| | 237 | Praphullacharan Chakrabarti ... | 17 | First. |
| | 238 | Upendrachandra Nath | 18-3 | Second. |
| | 239 | Priyanath Chakrabarti | 19 5 | Second. |
| | 241 | Satyendrakumar De ... | 17-7 | First. |

| Roll. | No. | Name. | Age. | Division in which the candidate has passed |
|---|---|---|---|---|
| | | **Gobindapur Sibanath High School.** | | |
| Kish. | 243 | Sureschandra Ray ... | 19-8 | Second |
| | 244 | Rajendrachandra Acharyya ... | 17-1 | Second |
| | 245 | Sasimohan Saha ... | 16-9 | Second. |
| | 246 | Surendrachandra Das | 20 | Third |
| | 248 | Tarakchandra Saha ... | 16-7 | First |
| | 249 | Girindrachandra Das ... | 17-2 | Second. |
| | 252 | Luthfor Rahman ... | 21-8 | Third |
| | 255 | Mahammad Sadat Aly | 20-2 | Second |
| | | **Bajitpur H. E. School.** | | |
| | 259 | Harendrachandra Chaudhuri ... | 24 | Second |
| | | **Brahma Boys' School, Calcutta.** | | |
| | 260 | Radharaman Barmanray (I) ... | 16-3 | First |
| | | **Bhajanghat High School.** | | |
| Kri. | 3 | Narugopal Mukhopadhyay ... | 19-4 | Second |
| | | **Alamdanga H. E. School.** | | |
| | 4 | Manindranath Saha ... | 17-1 | First |
| | 9 | Satischandra Pal ... | 17 10 | Second |
| | 12 | Surendramohan Karmakar (H) ... | 17-4 | First |
| | 13 | Nitaipada Biswas (H) ... | 17-8 | First |
| | 14 | Tarapada Sihi | 17-9 | Second |
| | 15 | Durgapada Sihi . | 17 3 | Second |
| | 16 | Ahmed Harejuddin Biswas | 17 2 | First |
| | 18 | Sahajahan Ali Biswas ... | 20 1 | Second. |
| | 19 | Tomizuddin Biswas . | 22 2 | First |
| | 20 | Rajebali Shaw ... | 19 6 | First |
| | 21 | Akbarali Biswas . | 17 | First |
| | | **Bangaon H. E. School.** | | |
| | 22 | Bimalkanti Bhattacharyya ... | 17-7 | First |
| | 24 | Jatischandra Ghosh (MV) ... | ... | First |
| | 25 | Kalipada Ghosh ... | 19-2 | First. |
| | 26 | Atulkrishna Mukhopadhyay ... | 24 7 | First |
| | 28 | Charusekhar Nath (Mm) | 16-2 | First |
| | 30 | Birendranath Datta ... | 17-1 | Second |
| | 32 | Jagatpran Mukhopadhyay ... | 16-1 | First |
| | 35 | Sajedar Rahman ... | 17 3 | First |
| | 36 | Montesham Uddin Ahmed ... | 16-8 | First |
| | | **Muragachha H. E. School.** | | |
| | 37 | Bikaschandra Chattopadhyay ... | 17-11 | Second |
| | 38 | Sudhamay Chattopadhyay ... | 17-3 | Second |
| | 39 | Anilkumar Gangopadhyay ... | 18-1 | Second |

| Roll. | No. | Name | Age | Division in which the candidate has passed. |
|---|---|---|---|---|
| | | **Muragacha H. E. School**—*concld* | | |
| Kri. | 40 | Smarajitkumar Gangopadhyay ... | 17-4 | First |
| | 41 | Kamalakanta Muklopadhyay .. | 17-10 | First |
| | 42 | Sibadas Mukhopadhyay (M) ... | 18 | First |
| | 43 | Susilkumar Mukhopadhyay ... | 17 3 | Third |
| | 44 | Prabhatkusum Pathak (Mm) ... | 16-2 | First |
| | 45 | Mahammad Khodadad Mandal ... | 21 4 | Second |
| | 47 | Sailendranath Chattopadhyay ... | 17 4 | Second |
| | 48 | Hajarigopal Mukhopadhyay ... | 16 | First |
| | 49 | Purnachandra Mukhopadhyay ... | 17 | First |
| | | **C. M. S. St. John's High School, Krishnagar.** | | |
| | 50 | Moffizuddin Ahmed (m) | 18 2 | Second |
| | 53 | Nrisinhaprasad Ray ... | 18-2 | Second |
| | 54 | Nagendranath Sarkar (Vm) ... | 16-2 | First |
| | 55 | Sudhiranjan Mitra ... | 19 8 | Second |
| | 57 | Narayanchandra Pramanik ... | 21 4 | Second. |
| | 58 | Baranasi Bandyopadhyay (H) ... | 17 4 | First. |
| | 59 | Abanikumar Baral .. | 18-6 | First |
| | 62 | Prabhatkumar Chattopadhyay . | 16 8 | Second |
| | 64 | Kshirodgopal Muhuri | 19 6 | Second |
| | 65 | Sailendranath Chattopadhyay ... | 20 | Second |
| | 66 | Radharaman Maitra .. | 20 2 | Second |
| | 70 | Biranaiprakas Biswas | 18 7 | Second |
| | 71 | Nripendranath Datta | 17-8 | Second |
| | 72 | Dhirendranath Bandyopadhyay ... | 19-1 | Third |
| | 74 | Nur Mohammad ... | 20 10 | Second |
| | 75 | Forozali Biswas (Mm) | 18 8 | First |
| | 76 | Golam Mortoza (Mm) | 19 8 | First |
| | | **Purbasthali Victoria Institution.** | | |
| | 77 | Mrityunjay Datta (m) | 17-9 | First |
| | 80 | Kesabchandra Bandyopadhyay ... | 16-5 | Second. |
| | | **Memnagar H. E. School.** | | |
| | 81 | Amulyakumar Biswas (m) ... | 17-7 | First |
| | 82 | Azizul Islam ... | 19 4 | Second |
| | 84 | Gaurhari Biswas ... | 16-8 | Second |
| | 85 | Kshitischandra Ghosh | 21-4 | Second |
| | 86 | Sudhirkumar Seuray | 16-5 | First |
| | 87 | Nripendranath Sarkar | 19 | Second |
| | 88 | Kshitischandra Kundu | 16-11 | Second |
| | 92 | Sisirkumar Gangopadhyay ... | 19 4 | Third |
| | | **Meherpur H. E. School.** | | |
| | 93 | Shaikh Mahammad Tafazzal Hossain (m) | 17-9 | First |
| | 94 | Md Sirajul Islam .. | 20 | Second |
| | 96 | Susilkumar Sarkar ... | 16 9 | First |
| | 97 | Jagannath Pramanik | 20 3 | First. |
| | 98 | Satyendrabhushan Mallik (Mm) ... | 16 | First |

| Roll. | No. | Name. | Age. | Division in which the candidate has passed. |
|---|---|---|---|---|
| | | **Meherpur H. E. School**—*concld* | | |
| Kri. | 99 | Binaybhushan Kundu | 17-4 | First |
| | 100 | Balaramchandra Datta (m) ... | 18 | First |
| | 101 | Nirmalchandra Chattopadhyay ... | 16-8 | First |
| | 102 | Satischandra Biswas .. | 17-3 | First |
| | 103 | Rajendranath Biswas ... | 22 5 | First |
| | 105 | Kalipada Biswas ... | 18 | First |
| | 107 | Gauribilas Biswas ... | 18-7 | Second |
| | 108 | Bidhubhushan Biswas | 18-5 | Second |
| | 109 | Jaladhar Pal ... | 18-6 | Second. |
| | 110 | Atalchandra Sarkar (II) | 16 8 | First |
| | 112 | Nabakumar Ghosh .. | 22-11 | Third |
| | 113 | Prabhatkumar Gangopadhyay (M) . | 16-1 | First |
| | 115 | Gunindranath Bandyopadhyay ... | 19-6 | First |
| | 116 | Harendranath Ray (m) | 16 3 | First |
| | | **Chuadanga V. J. H. E. School.** | | |
| | 117 | Abdul Khaleque Joarder .. | 16-1 | First |
| | | **Belpukur H. E. School.** | | |
| | 119 | Manindranath Mukhopadhyay . | 19 | First |
| | 120 | Jadumani Nath ... | 16-11 | First |
| | 121 | Bijaychandra Ray ... | 18-1 | Second |
| | 122 | Sudhirkumar Bhattacharyya ... | 17-6 | Second |
| | | **Natuda H. E. School.** | | |
| | 123 | Bholanath Kuri ... | 23-2 | First. |
| | 124 | Bankimchandra Sengupta ... | 16 10 | First |
| | 125 | Indubhushan Biswas | 18-5 | Second |
| | 126 | Madhusudan Acharyya | 18-4 | First |
| | 127 | Tinkari Pathak ... | 18 2 | Second |
| | | **Krishnagar Collegiate School.** | | |
| | 128 | Golam Muhammad Mondal ... | 18-3 | First |
| | 129 | Patitpaban Bandyopadhyay (Mm) ... | 18-2 | First |
| | 130 | Kiranchandra Bakshi (m) | 16-2 | First |
| | 131 | Ajitkumar Biswas (Lml) ... | 16 6 | First |
| | 132 | Susilkumar Chakrabarti | 18 6 | First. |
| | 133 | Rabindranath Ghosh (m) ... | 17-2 | First |
| | 134 | Ramendrakumar Mitra (Mm) ... | 16-2 | First. |
| | 135 | Dwijendranath Mukhopadhyay (m) ... | 17 8 | First |
| | 136 | Nripinhaprasad Sarkar | 17 4 | First. |
| | 137 | Mohinimohan Chaudhuri ... | 19-2 | Third |
| | 138 | Birendramohan Acharyya (M) ... | 16-4 | First. |
| | 139 | Sibanath Mukhopadhyay (m) ... | 19 | First. |
| | 140 | Taradas Mukhopadhyay (m) ... | 17-5 | First. |

| Roll. | No. | Name. | Age | Division in which the candidate has passed. |
|---|---|---|---|---|
| | | **Krishnagar Collegiate School**—*concld.* | | |
| Kri. | 141 | Kshitiranjan Ray .. | 20 | Second. |
| | *142 | Kaumudiranjan Sanyal (E M Lm Mc) ... | 16-1 | First. |
| | 143 | Sailendranath Sanyal (Mm) ... | 16-4 | First. |
| | 144 | Pramodranjan Sengupta ... | 16 11 | First. |
| | 145 | Sudhirkumar Bandyopadhyay ... | 16 2 | First |
| | 146 | Surathkumar Chattopadhyay ... | 19 2 | First |
| | 148 | Manujmohan Mukhopadhyay ... | 16-3 | First. |
| | 150 | Dhirendranath Palchaudhuri ... | 16 11 | Second |
| | 151 | Susilkumar Sarkar ... | 17-4 | First. |
| | 152 | Harimohan Sen ... | 17-5 | Second. |
| | 153 | Bibhutibhshan Biswas | 16-5 | First |
| | 154 | Mohitkumar Chattopadhyay .. | 16-10 | First. |
| | 155 | Biswanath Mukhopadhyay ... | 17 | Second |
| | | **Patuli H. E. School.** | | |
| | 158 | Phanibhushan Ray (M) | 20-10 | First |
| | 159 | Jatindramohan Mukhopadhyay (Mm) ... | 16-4 | First |
| | 160 | Bibhutibhushan Hait (M) ... | 19-1 | First. |
| | 161 | Gopalchandra Ray ... | 17-1 | Second |
| | 162 | Sureschandra Ray ... | 20-1 | Second |
| | 163 | Parbatikumar Bhattacharyya ... | 16-3 | Third |
| | 164 | Sudhansukumar Bagchi | 18-7 | Second |
| | | **Majdia Railbazar H. E. School.** | | |
| | 165 | Kaminikumar Sarkar (m) ... | 21-6 | First |
| | 166 | Abdulkader Shekh (Mm) | 17-1 | First. |
| | *167 | Kalipada Biswas (ML ml) ... | 17-2 | First |
| | 168 | Indubhushan Biswas (Mm) ... | 16-4 | First. |
| | 169 | Sibaprasad Raychaudhuri ... | 17-1 | First. |
| | 170 | Lal Mahammed Mallah | 16-3 | First. |
| | 171 | Hrishikes Ghosh ... | 17-1 | First |
| | 172 | Bijaykumar De ... | 17-2 | Third |
| | 173 | Paresnath Chakrabarti | 18-5 | Second |
| | 174 | Balaikrishna Biswas ... | 21-8 | First. |
| | 175 | Suranath Ray ... | 17-1 | First |
| | | **Chuadanga V. J. H. E. School.** | | |
| | 176 | Muhammad Kasem Ali | 20-1 | Second. |
| | 177 | Manoranjan Goswami | 19-4 | Second. |
| | 178 | Haripada Biswas ... | 18-2 | Second. |
| | 179 | Kshitibhushan Biswas | 17-3 | Second. |
| | 181 | Bhabanisankar Sen ... | 17-2 | First. |
| | 182 | Rameschandra Ray ... | 16 | First. |
| | 183 | Trilochan Mukhopadhyay ... | 16-5 | Second. |

| Roll. | No. | Name. | Age. | Division in which the candidate has passed. |
|---|---|---|---|---|
| | | **Ghuadanga V. J. H. School**—*concld* | | |
| Kri. | 185 | Anukulchandra Pramanik ... | 20-3 | Second |
| | 187 | Malik Jaul Fokkar ... | 21-8 | Second |
| | 188 | Nur Mahomed Mur ... | 19-11 | Second |
| | 189 | Hamidar Rohaman Mallick ... | 19-8 | Third |
| | | **Krishnagar A. V. School.** | | |
| | 190 | Sachiranjan Bagchi (V) | 20-9 | First |
| | *191 | Nanigopal Bandyopadhyay (Mm) ... | 16 | First |
| | 193 | Jyotibhushan Ghosh (m) ... | 16-7 | First |
| | 194 | Jatischandra Ghosh ... | 21-9 | Second. |
| | 197 | Harendrakrishna Majumdar ... | 18 | Second. |
| | 198 | Binaygopal Mukhopadhyay (m) ... | 17 | First |
| | 200 | Prasantakumar Ray chaudhuri ... | 18-5 | Second |
| | 201 | Dhirendranath Sarkar | 17 | Second |
| | 202 | Umanath Bandyopadhyay ... | 16-8 | First |
| | 205 | Adityanath Ray ... | 19 4 | Second |
| | 206 | Sarojkumar Mukhopadhyay ... | 20-3 | Second |
| | 207 | Amalkrishna Ray ... | 19-6 | First |
| | 208 | Biswanath Ray ... | 17-6 | First |
| | 209 | Srischandra Biswas ... | 17-4 | First |
| | | **Sudhakarpur H. E. School.** | | |
| | 212 | Ranadhir Das (Mm) ... | 16-5 | First |
| | 213 | Radharaman Laha ... | 20-9 | Second |
| | 214 | Sribaschandra De ... | 16-3 | Second |
| | 215 | Birinchibhushan Das ... | 17 5 | First. |
| | 216 | Jagannath Majumdar | 17-5 | First |
| | 217 | Prabhaschandra Bandyopadhyay ... | 16-1 | First |
| | 218 | Ramkamal Sinha ... | 17-6 | Second |
| | 220 | Hrishikes Sarkar ... | 20 | Second. |
| | | **Sutragarh M. N. H. E. School.** | | |
| | 223 | Mrityunjay Pramanik | 18-11 | Second |
| | 225 | Sachindrakumar Nandi | 18-8 | First. |
| | 226 | Rabindrakumar Biswas (M) ... | 18-10 | First |
| | 227 | Debananda Pramanik | 16-1 | First |
| | 228 | Bhupendranath Mukhopadhyay ... | 19 | First |
| | 229 | Abinaschandra Bhabai | 19 | Second. |
| | 230 | Kalipada Bhabai ... | 18-1 | Second. |
| | 233 | Abibhushan Biswas ... | 16-10 | Third |
| | 235 | Lal Mahammad ... | 17-9 | First. |
| | | **Nabadwip Hindu School.** | | |
| | 238 | Gobindachandra Ray (M) ... | 16-9 | First. |
| | 240 | Narayanchandra Das (m) ... | 20-6 | First |
| | 241 | Bhupendramohan Ray chaudhuri (Mm) ... | 18-2 | First. |

| Roll. | No | Name | Age. | Division in which the candidate has passed |
|---|---|---|---|---|
| | | **Nabadwip Hindu School**—*concld* | | |
| Kri. | 243 | Baidyanath De (L) ... | 16-1 | First |
| | 244 | Adyanath Basumallik... | 18-7 | First |
| | 245 | Gaurisankar Gupta (Mm) ... | 17-11 | First |
| | 247 | Narendranath Bhattacharyya ... | 16-3 | First |
| | 248 | Ramnath Goswami (Mm) ... | 16-2 | First |
| | 249 | Biswoswar Sahapramanik (Mm) ... | 16-4 | First |
| | 250 | Rasbihari Joardar ... | 21-1 | First |
| | 252 | Phanibhushan Das ... | 18 7 | Second. |
| | 253 | Harekrishna Ghosh (Mm) ... | 18 | First |
| | 254 | Anathbandhu Chattopadhyay (Mm) ... | 18-3 | First |
| | 255 | Gunendragopal Chattopadhyay (Mm) ... | 17-3 | First |
| | 256 | Sudhansusekhar Chattopadhyay (Mm) ... | 18-6 | First |
| | 258 | Rameschandra Bhaduri (m) ... | 16-6 | First |
| | 260 | Brajabandhu Bagchi ... | 17 6 | Second |
| | 261 | Sudhamay Goswami ... | 17-4 | Second. |
| | 262 | Gobindachandra Pal ... | 17-4 | Second |
| | 263 | Sunilkumar Majumdar | 20-5 | First |
| | 264 | Anilranjan Sengupta (M) ... | 17-9 | First |
| | 265 | Chaitanyacharan Ray ... | 17 1 | First |
| | 266 | Prabodhkumar Bhattacharyya ... | 16-1 | Second |
| | 267 | Krishnalal Das ... | 16-2 | Second |
| | | **Kushtia H. E. School.** | | |
| | 268 | Amalendu Sen (M) ... | 16-11 | First. |
| | | **Bheramara Chandipur I. K. Institution.** | | |
| | 269 | Phanibhushan Chakrabarti ... | 16 | Second |
| | | **Female Private Student.** | | |
| Kri. F. P. | 1 | Jugal Bala Das ... | | First |
| | | **Private Students.** | | |
| Kri. P. | 1 | Swarnakamal Mukhopadhyay ... | 17-2 | Third |
| | 2 | Jamunikanta Sarkar ... | 22 | Second |
| | 3 | Kabir Uddin ... | 20 1 | Second |
| | | **Teachers.** | | |
| Kri. T. | 1 | Mahamed Yakub ... | 22-2 | Second |
| | 2 | Saratchandra Ray (m) | 21 | First |
| | 4 | Niranjan Kaji .. | 22-4 | First |

| Roll. | No. | Name. | Age. | Division in which the candidate has passed |
|---|---|---|---|---|
| | | **Amlasadarpur H. E. School.** | | |
| Kus. | 1 | Manindranath Biswas (Mm)* ... | 16-7 | First |
| | 2 | Probodhchandra Majumdar (m) ... | 18-3 | First |
| | 3 | Susilkumar Saha (Mm) | 16-10 | First |
| | 4 | Bimalchandra Saha (Mm) ... | 17-1 | First |
| | 6 | Sadhucharan Nath (Mm) ... | 17-4 | First |
| | 7 | Kisorimohan Joardar (m) ... | 16-6 | First |
| | 8 | Kshirogopal Majumdar (m) ... | 16-10 | First |
| | 9 | Nanigopal Majumdar (m) ... | 19 10 | First |
| | 10 | Bibhutibhushan Kabiraj ... | 19-1 | Second |
| | 11 | Sachinandan Pal ... | 20-4 | First. |
| | 12 | Asitapada Sen (M) ... | 16-6 | First |
| | 14 | Quazi Mohiuddin (M) | 17 1 | First |
| | 15 | Abzal Rahaman Chowdhury ... | 21-3 | Second |
| | 16 | Shahajahanali Mullic | 18 3 | Second |
| | 17 | Mohammad Akhtar Hossain ... | 18 | Second. |
| | 18 | Chinuruddin Mahtha .. | 22-7 | Second |
| | 19 | Shaikh Mohammed Ishaque ... | 19 | Second |
| | | **Kumarkhali M. N. H. E. School.** | | |
| | 20 | Bhupendranath Ray ... | 18-1 | Second |
| | 21 | Gonsaipada Kundu ... | 18 | Second |
| | 22 | Krishnapada Kundu ... | 17-5 | Second |
| | *24 | Phanindranath Majumdar (Mm) ... | 16-1 | First. |
| | 25 | Radhanath Biswas (Mm) ... | 17-7 | First |
| | 26 | Sarojkumar Ghosh (m) | 17-9 | First. |
| | 27 | Ramanimohan Majumdar ... | 19-3 | First |
| | 28 | Durgapada Bhattacharyya (Mm) ... | 18 | First |
| | 29 | Batakrishna Raysaha | 16-8 | First |
| | 31 | Sachindranath Maitra | 19-3 | Second |
| | 32 | Basantakumar Biswas | 18-3 | Second |
| | 33 | Taraknath Maitra (Mm) | 17-5 | First |
| | | **Shikarpur H. E. School.** | | |
| | 34 | Manoranjan Mitra (MLml) ... | 17 | First |
| | 35 | Budyendrasekhar Biswas (Mml)* ... | 19-3 | First |
| | 36 | Raghunandan Acharyya (Mm) ... | 17-2 | First |
| | 38 | Sasirkumar Chakrabarti (m) .. | 18 7 | First. |
| | 39 | Sambhunath Bagchi (m) ... | 17-7 | First |
| | 40 | Phanindramohan Bagchi ... | 17-4 | Second. |
| | 41 | Sibchandra Biswas (m) | 17-9 | First. |
| | 42 | Haroudrakumar Chaudhuri (m) ... | 16 3 | First |
| | 43 | Niranjan Biswas (Mm) | 19-7 | First. |
| | 44 | Prabhasgopal Ghosh ... | 18-2 | Second. |
| | 45 | Satyakumar Bagchi (m) ... | 16-1 | First |
| | 47 | Jitendranath Sanyal ... | 22 4 | Second. |
| | 48 | Md. Rafisuddin (Mm) | 18-4 | First. |
| | 49 | Md. Mafisuddin Miah | 19-11 | First |
| | 50 | Md. Imanali ... | 20-6 | First. |
| | | **Amlasadarpur H. E. School.** | | |
| | 51 | Atulkrishna Adhikari | 19 | Second. |
| | | **Juniadah H. E. School.** | | |
| Kus. | 52 | Kantibhushan Sarkar (Mm) ... | 22 | First |
| | 53 | Umeschandra Sarkar ... | 18-5 | Second. |
| | 54 | Mahadeb Bandyopadhyay (Mm) ... | 23-11 | First |
| | 55 | Ramchandra Bandyopadhyay ... | 19 | Second. |
| | 56 | Mojiruddin Pramanic | 19-2 | Second |
| | 57 | Mahammad Easin Ali | 22-3 | Third |
| | 58 | Sovanali Ahamed ... | 17-3 | Second. |
| | 59 | Munshi Md Abdul Waheb .. | 21 8 | Second |
| | | **Gosain Durgapur H. E. School.** | | |
| | 60 | Khandkar Mahomed Munsuruddin ... | 18-3 | Second |
| | 61 | Mir Mansur Ally ... | 16 | First |
| | 62 | Haripada Bhattacharyya ... | 17-1 | Second. |
| | | **Damurhuda H. E. School, Nadia.** | | |
| | 64 | Baladeb Bhattacharyya | 19-2 | Second |
| | 66 | Purnachandra Pal ... | 16 6 | First. |
| | 67 | Samarendranath Son (m) ... | 17-1 | First |
| | 68 | Bholanath Santra (m) | 19 4 | First |
| | 69 | Ramapada Nandi (Mm) | 16-8 | First. |
| | 70 | Bibhutibhushan Basu | 18-10 | First |
| | 71 | Chandicharan Majumdar .. | 19 2 | Second. |
| | 72 | Murarimohan Chattopadhyay ... | 17-1 | First. |
| | 75 | Sachindrachandra Debsarkar ... | 18-2 | Second |
| | 76 | Bishnupada Bhattacharyya ... | 17-4 | Second |
| | 77 | Baidyanath Bhattacharyya ... | 19 | First. |
| | | **Kushtia H. E. School.** | | |
| | 79 | Md Mainuddin ... | 17 | First. |
| | 80 | Sharfuddin Ahmad (Mm) ... | 17-5 | First. |
| | 81 | Baharullab Joarder (Mm) ... | 18-8 | First |
| | 83 | M. Ansaruddin Ahmed | 16-2 | First |
| | 84 | Mahammad Abdul Jobber ... | 19-9 | Second. |
| | 86 | Mahommed Bazlar Rahaman ... | 18-9 | First. |
| | 87 | Didar Bokhsa ... | 22-1 | Second |
| | 89 | Asgarali ... | 22-8 | Second. |
| | *90 | Sudhirkumar Saha (MLml) ... | 16-1 | First. |
| | 91 | Jagadischandra Guha (Mm) ... | 16-9 | First. |
| | 92 | Sibanath Saha (Mm) ... | 16-11 | First |
| | 93 | Kshitischandra Chaudhuri ... | 20-2 | Second. |
| | 94 | Shibakali Saha ... | 17-4 | First. |
| | 95 | Aswinikumar Kundu (Mm) ... | 17-6 | First. |
| | 96 | Amulyakrishna Saha (Mm) ... | 19-4 | First. |
| | 97 | Bhagirath Pramanik (Mm) ... | 16-11 | First. |
| | 99 | Jaganath Saha (Mml)* | 15 | First. |
| | 100 | Hemantakumar Das (Mm) ... | 16-4 | First. |
| | 101 | Surendranath Sarkar ... | 18 | Second. |

| Roll. | No. | Name | Age. | Division in which the candidate has passed |
|---|---|---|---|---|
| | | **Kushtia H. E. School.** | | |
| Kus. | 102 | Mohitmohan Dasgupta (MmG) ... | 16 | First |
| | 103 | Khagendrakumar Ray (Mm) ... | 17-2 | First. |
| | *105 | Rathindranath Biswas (Mm) ... | 16-6 | First. |
| | *106 | Jitendranath Ray (MVm) ... | 18-3 | First |
| | *108 | Anantakumar Datta (Mm Mc) ... | 17-3 | First. |
| | 109 | Nanigopal Adhikari (Mm) ... | 16 7 | First |
| | 111 | Phanindranarayan Chaudhuri ... | 16 5 | First |
| | 112 | Narendranath Mitra ... | 18 7 | Third |
| | 113 | Sisirkumar Ray ... | 20-3 | Second. |
| | 114 | Gopalchandra Chakrabarti ... | 19-4 | First |
| | 116 | Narayanchandra Biswas | 18 | First |
| | 117 | Upendranath Sarkar ... | 20-1 | First |
| | 118 | Surendranath Bagchi ... | 16 5 | First. |
| | 119 | Binaykumar Sen (mHy) | 16-6 | First |
| | 120 | Nityananda Josh (Mm) | 17-4 | First |
| | 121 | Bajdvanath Chaudhuri | 18 3 | Second. |
| | 122 | Santoshkumar Lahiri | 17-11 | Second. |
| | 123 | Sarojranjan Acharyya (V) ... | 16 2 | First |
| | 124 | Debendranath Pal ... | 17-5 | Second |
| | 125 | Bimalendra Sarkar | 19 7 | First |
| | 126 | Indubhusan Biswas | 16 4 | First |
| | 127 | Kalipada Saha ... | 16-4 | Second |
| | 128 | Baidyanath Pal ... | 19 8 | Second |
| | 130 | Bijaygopal Chattopadhyay (M) ... | 18-5 | First |
| | 131 | Birendranath Pal ... | 20 | Second |
| | | **Benipur H. E. School.** | | |
| | 132 | Azimuddin Biswas ... | 17-10 | Third |
| | 133 | Durgapada Sen .. | 17-7 | First |
| | 134 | Tarapada Majumdar ... | 16-11 | Second |
| | 135 | Kalipada Basu ... | 19 9 | Second. |
| | 136 | Md Tofail Mollah ... | 17-7 | Second |
| | 137 | Syed Abdul Wadud ... | 16-3 | First |
| | 138 | Muhammad Kofatullah (m) ... | 16-6 | First |
| | | **Bheramara-Chandipur J. K. Institution.** | | |
| | 141 | Manmathanath Sanyal | 19-8 | Second |
| | 143 | Mahendranath Mandal | 20-6 | First |
| | 144 | Nagendranath Sarkar (m) ... | 17-5 | First |
| | 145 | Dhirendramohan Nath (M) ... | 18-9 | First. |
| | 147 | Md. Asadali Shaikh ... | 23-10 | Third |
| | 149 | Shaikh Noor Ahammed | 17-1 | Second. |
| | 150 | Md. Atiar Rahaman (L M) ... | 16-2 | First. |
| | | **Harinarayanpur H. E. School.** | | |
| | 151 | Kalipada Biswas ... | 18-8 | First. |
| | 152 | Pramathanath Biswas (M) ... | 16-6 | First. |
| | 153 | Kunjalal Kundu (Mm) | 16-10 | First |
| | 154 | Abanikanta Dasgupta | 17-6 | Second. |
| | 159 | Chandicharan Biswas | 20-1 | Second. |
| | 161 | Srinath Biswas ... | 20-3 | Third |
| | 163 | Birendranath Sarkar ... | 20-4 | Third |
| | 168 | Shahabuddin Ahmed | 16-7 | Second. |
| | 169 | Entajali Shaikh ... | 20-2 | Third |
| | 170 | Abdus Satter Mian ... | 18-2 | Second |
| | | **Jeradah H. E. School.** | | |
| | 172 | Baidyanath Saha (M) | 16-8 | First. |
| | 174 | Parobanan Biswas ... | 21 | Second. |
| | 175 | Anantakumar Biswas | 17-4 | First. |

| Roll. | No. | Name. | Age | Division in which the candidate has passed |
|---|---|---|---|---|
| | | **Goalanda H. E. School.** | | |
| Kus. | 176 | Phanischandra Majumdar. | 18 | First |
| | | **Pangsa George H. E. School.** | | |
| | 177 | Quazi Khadem Hossain (L) ... | 18-4 | First |
| | 178 | Mahadebchandra Das (Mm) ... | 20-1 | First. |
| | 179 | Nagendranath Das ... | 21-1 | First |
| | 180 | Sudhirkumar Sinha (m) | 16-3 | First |
| | 181 | Jatindrasekhar Sarkar (m) ... ... | 16-3 | First. |
| | 182 | Jagatbandhu Biswas (M) ... ... | 22 | First |
| | 183 | Gokulchandra Lahiri | 19-2 | First |
| | 184 | Surendranath Pal | 24-3 | Second |
| | 188 | Annadaprasad Acharyya ... ... | 18 1 | Second. |
| | 189 | Probodhchandra Ray ... | 24 8 | First |
| | 192 | Debendranath Pramanik | 16 1 | Third. |
| | 193 | Jatindranath Chakrabarti ... ... | 16-9 | Second |
| | | **Goalanda H. E. School.** | | |
| | 195 | Krishnagopal Acharyya | 18-11 | Second |
| | 196 | Durgapada Bhattacharyya (m) ... | 18 | First |
| | 197 | Gopalchandra Chaudhuri (m) ... | 17-3 | First |
| | 199 | Himansukumar Sanyal (M) ... ... | 18 6 | First |
| | 200 | Susilkumar Sen (Mm) .. | 16-8 | First |
| | 202 | Nirmalchandra Bagchi | 19-1 | Second |
| | 203 | Dwijendranath Biswas | 19 3 | Second |
| | 204 | Jagadischandra Chakrabarti ... | 21 2 | First |
| | 206 | Harendrakumar Dasgupta ... ... | 19-3 | Second |
| | 208 | Aswinikumar Ghosh ... | 17-2 | First. |
| | 209 | Kumudbandhu Ghosh | 17-5 | Second. |
| | 210 | Prabhaschandra Maitra | 16-4 | Second |
| | 211 | Nanigopal Ray ... | 16 8 | Second |
| | 212 | Binaykrishna Sarkar ... | 17-2 | First |
| | 213 | Sailendranath Sen ... | 17 4 | First |
| | 224 | Sureshchandra Biswas | 20 | Second. |
| | 215 | Ajitkumar Dasgupta ... | 17 8 | Second |
| | 216 | Durgadas Guharay ... | 20-11 | Second |
| | 218 | Sukhendrakumar Majumdar ... | 18-1 | First |
| | 219 | Arabindalal Nag ... | 17-8 | Second |
| | 220 | Mukundachandra Nandi | 16-2 | Second |
| | 221 | Ajimuddin Miah ... | 18-1 | Second |
| | 222 | Ismile Dewan ... | 19-3 | Second. |
| | 223 | Hasanali Mandal (m) ... | 22 | First |
| | | **Shaliakupa H. E. School.** | | |
| | 224 | Haripada Chakrabarti (MmL) ... | 17-5 | First |
| | 225 | Sudhansusekhar Chakrabarti (Mm) ... | 18 1 | First |
| | 226 | Sasankakumar Ghosh (m) ... ... | 16-6 | Second |
| | 228 | Surendranath Mandal (Mm) ... ... | 16 10 | First |
| | 229 | Gopinath Ray (M) ... | 17-5 | First |
| | 230 | Jugalkishor Saha ... | 17 5 | Second. |
| | 231 | Kalidas Saha (M) ... | 18-10 | First. |
| | 232 | Arjun Biswas ... | 22 11 | Third. |
| | 233 | Mukundalal De ... | 16-8 | First |
| | 235 | Radhagobinda Saha ... | 16-9 | Second |

| Roll. | No | Name. | Age. | Division in which the candidate has passed |
|---|---|---|---|---|
| | | **Khokan-Janipur H. E. School.** | | |
| Kus. | 236 | Durgaprasanna Chaudhuri (Mm) .. | 16-11 | First |
| | 137 | Rohindramohan Majumdar (M) .. | 16 | First |
| | 238 | Rakhalchandra Poddar | 16-7 | Second |
| | 240 | Gopalchandra Sikdar ... | 18-2 | Third |
| | | **Habaspur Gossimbazar Raj H. E. School.** | | |
| | 243 | Bibhutibhushan Chakrabarti ... | 19-10 | First |
| | 244 | Satyendranath Sarkar (M) ... ... | 17-1 | First |
| | 245 | Radhikalal Saha ... | 18-11 | Third |
| | 247 | Dinabandhu Das ... | 22-10 | Third |
| | 248 | Tarapada Joardar ... | 17-6 | Second |
| | 249 | Tarakeswar Sarkar ... | 19-6 | Third |
| | 251 | Binodbihari Goswami | 19-1 | Second. |
| | 252 | Mahammad Abdul Wahed ... | 18 4 | Second |
| | 253 | Ahmed Hossainali (m) | 18-9 | First |
| | | **Private Student.** | | |
| Kus. P. | 1 | Tarapada Haldar (Mm) | 19 | First |
| | | **Mithapur L. N. H. E. School.** | | |
| Mad. | 1 | Radhamohan Karmakar (MV) ... | 21 | First |
| | 2 | Haripada Saha (m) ... | 16-1 | First |
| | 3 | Kisorimohan Saha (m) | 16-10 | First |
| | 4 | Chunilal Saha ... | 19-2 | Second |
| | 5 | Jatindramohan Saha ... | 19-10 | Second |
| | 6 | Binodbihari Sikdar ... | 16-3 | Second |
| | | **Bajitpur R. K. Edward Institution.** | | |
| | 8 | Ofazaddin Howladar ... | 17-8 | First |
| | 9 | Rajabali Matabbar ... | 16-6 | First. |
| | 10 | Debendranath Maitra (Mm) ... | 17-2 | First |
| | 12 | Brajendranath Datta ... | 17-8 | First |
| | 13 | Brajendralal Basu ... | 17-10 | Second |
| | 14 | Harimohan Ghosh ... | 19-2 | Second |
| | 15 | Rebatikanta Ghosh ... | 16-1 | First |
| | 16 | Ramanimohan Nag ... | 19-7 | Second |
| | 17 | Praphullakumar Pal ... | 18 | Second |
| | 18 | Naliniranjan Ghosh ... | 17-2 | Second |
| | 19 | Jagadindranath Majumdar ... ... | 17-1 | Second |
| | | **Panditsar H. E. School.** | | |
| | 25 | Ramanath Bhattacharyya ... | 17-1 | Second |
| | 27 | Janakinath Chakrabarti (LV) ... ... | 17 | First |
| | 29 | Birendrachandra Das | 19-8 | Second. |
| | 30 | Puhabihari Dasgupta (Mm) ... ... | 21-7 | First. |
| | 34 | Radhaballabh Kundu ... | 16-8 | Second |
| | 38 | Haralal Bandyopadhyay | 19-4 | Second |
| | 39 | Praphullachandra Basu | 18-3 | Second. |
| | 40 | Girindrachandra Bandyopadhyay ... | 20 | First. |
| | 41 | Kalipada Dasgupta ... | 19-8 | Second. |

| Roll | No. | Name. | Age. | Division in which the candidate has passed. |
|---|---|---|---|---|
| | | **Lonsing H. E. School.** | | |
| Mad. | 46 | Umeschandra Mukhopadhyay (m) ... | 16-4 | First |
| | 47 | Manindralal Ray ... | 17 6 | First |
| | 48 | Mohinimohan Bhaumik | 16-1 | First |
| | 50 | Makhanlal Mukhopadhyay (Mm) ... | 17 | First. |
| | 52 | Bikasendranarayan Mukhopadhyay (V) | 19-2 | First. |
| | 54 | Sailendrakrishna Chaudhuri (m) ... | 16-8 | First |
| | 55 | Kunjalal Gop (Mm) ... | 17-8 | First. |
| | 56 | Praphullamohan Mukhopadhyay ... | 18-7 | First |
| | 57 | Samarendranath Raychatakchaudhuri ... | 20-5 | Second. |
| | 60 | Asutosh Tapadar ... | 16-3 | Second |
| | 61 | Bankimchandra Bandyopadhyay ... | 16-1 | First |
| | 62 | Nagendranath Sil ... | 19 1 | Third |
| | 64 | Monoranjan Chaudhuri | 17-2 | Second. |
| | 65 | Rameschandra Bandyopadhyay ... | 18 | First |
| | | **Naria B. L. H. E. School.** | | |
| | 67 | Md. Mobarakali ... | 17-6 | Third |
| | 72 | Rabilochan Saha ... | 20 4 | Third. |
| | | **Bhadrasan G. C. Academy.** | | |
| | 73 | Kasibisweswar Saha (Mm) ... | 16 | First. |
| | 74 | Hemantakumar Ray ... | 16 | First |
| | 76 | Akshaykumar Saha ... | 18 | First |
| | 78 | Suroschandra Bhattacharyya ... | 17-1 | First. |
| | | **Birmohan H. E. School.** | | |
| | 81 | Rameschandra Chattopadhyay (MVml) ... | 16-1 | First |
| | 82 | Tarinikanta Raychaudhuri (m) ... | 16-7 | First |
| | 83 | Brajendrakumar Raychaudhuri (M) ... | 16 1 | First |
| | 84 | Niranjan Ghoshal ... | 17-3 | First. |
| | | **Madaripur Islamia High School.** | | |
| | 85 | Jatindrachandra Bandyopadhyay (m) | 16-3 | First. |
| | 87 | Umeschandra Bandyopadhyay (Mm) ... | 19-1 | First |
| | 88 | Abinaschandra Guha ... | 19 | Second. |
| | 89 | Niradranjan Sengupta | 20-5 | Second. |
| | 101 | Mahammad Abdul Hafez Miah ... | 21-1 | Third. |
| | | **Amgram H. E. School.** | | |
| | 103 | Hiralal Samajpati (m) | 19-2 | First. |
| | 104 | Kshirodlal Das ... | 19 | Second. |
| | 106 | Jitendranath Gangopadhyay ... | 21-1 | Second. |
| | 107 | Upendranath Bhattacharyya ... | 19-11 | First. |
| | 108 | Atulchandra Bhattacharyya (MVml) ... | 18-4 | First. |
| | 110 | Asutosh Sarkar (m) ... | 16-7 | First. |
| | 112 | Bimalchandra Raychaudhuri (Mm) ... | 17-1 | First. |
| | | **Madaripur H. E. School.** | | |
| | 113 | Benimadhab Bandyopadhyay (V) ... | 16-6 | First. |
| | 114 | Jyotischandra Bandyopadhyay (Mm) ... | 16-2 | First. |

| Roll. | No. | Name. | Age. | Division in which the candidate has passed |
|---|---|---|---|---|
| | | **Madaripur H. E. School.** | | |
| Mad. | 115 | Chunilal Basu (M) ... | 16-1 | First. |
| | 116 | Jatindranath Brahma | 19 1 | Second |
| | 117 | Kalikinkar Bandyopadhyay .. | 17-9 | First |
| | 118 | Narayanchandra Bhattacharyya ... | 17-1 | Second |
| | 119 | Dhirendramohan Basu | 16-1 | First |
| | 121 | Sachindranath Chakrabarti ... | 19 4 | Second. |
| | | **Kartikpur H. E. School.** | | |
| | 122 | Mohammed Eunus Miah (M) ... | 17-3 | First |
| | 123 | Mir Ekram Ali ... | 17-1 | Second |
| | 124 | Rasid Ahmed ... | 20-5 | First |
| | 125 | Ranadamohan Chattopadhyay ... | 18 | First |
| | 126 | Pramathanath Das ... | 18 | First |
| | 127 | Umeshchandra Mukhopadhyay ... | 16-11 | First. |
| | 128 | Sudhansukumar Senchaudhuri ... | 17-1 | First |
| | *129 | Hridapranjan Sengupta (Mml) ... | 16-4 | First |
| | 130 | Lalmohan Sil (Vm) ... | 17 2 | First |
| | 131 | Jadulal Acharyya ... | 17-11 | Second |
| | 132 | Asutosh Bhattacharyya | 17-4 | Third |
| | 133 | Jagadischandra Chakrabarti ... | 18-1 | Second |
| | 134 | Radhikamohan Datta | 18 10 | Second |
| | 135 | Hemendrakumar Majumdar ... | 17-6 | Second. |
| | | **Shibchar Nandakumar Institution.** | | |
| | 136 | Kshetranath Bhattacharyya ... | 19-3 | First |
| | 137 | Surendramohan Deb (Mm) ... | 16-11 | First |
| | 138 | Sudhansubhushan Hor | 19-1 | First |
| | 139 | Bhubanmohan Saha (m) | 18 | First |
| | 140 | Mohinimohan Saha ... | 21 1 | Second |
| | 141 | Kalipada Bhadra ... | 18-9 | First |
| | 142 | Dhirendrachandra Gangopadhyay ... | 16-9 | First |
| | 143 | Waseluddin Ahmed ... | 19-2 | Second |
| | 144 | Md Maqsud Ali Howladar (MVm) ... | 17-11 | First |
| | | **Madaripur H. E. School.** | | |
| | 145 | Rebatiranjan Chattopadhyay .. | 16-7 | First |
| | 146 | Chandrakumar Das (m) | 19 | First |
| | 147 | Amulyaratan Dasgupta | 16-8 | First |
| | *149 | Niradbaran Datta (MLml) ... | 17-1 | First |
| | 150 | Sudhirranjan Datta (m) | 17 1 | First. |
| | 151 | Dwijendramohan Ghosh | 18-7 | Second. |
| | 153 | Jitendramohan Guha (m) ... | 16 | First |
| | 155 | Indubhushan Majumdar | 16 4 | First. |
| | 156 | Trailokyanath Mandal | 17-1 | First |
| | *157 | Atulchandra Mirbahar (MLml) ... | 17-1 | First |
| | 158 | Bisweswar Mukhopadhyay ... | 17-4 | First. |
| | 159 | Satischandra Parhat ... | 17-1 | First |
| | 160 | Pratulchandra Raychaudhuri ... | 18-6 | Second. |
| | 161 | Sudhirchandra Raychaudhuri (Mm) ... | 17-2 | First. |
| | 162 | Jnanendranath Sengupta (V) ... | 18-1 | Second. |

| Roll. | No | Name. | Age. | Division in which the candidate has passed. |
|---|---|---|---|---|
| | | **Madaripur H. E. School.** | | |
| Mad. | 164 | Kalyankumar Dasgupta | 16-4 | First |
| | 165 | Sudhirranjan Sengupta (Mm) ... | 16 | First |
| | 166 | Sukhamay Ray (Mm) | 16-5 | First |
| | 168 | Khagendranath Dasgupta ... | 16-1 | First |
| | 169 | Saileschara Dasgupta | 18 | First. |
| | 170 | Shorasipada De (VI) ... | 18-3 | First. |
| | 171 | Nareschandra Datta ... | 18-1 | Second. |
| | 172 | Upendranath Gupta ... | 16 1 | First |
| | 173 | Radhikamohan Karmakar ... ... | 18-9 | Second |
| | 175 | Narayanchandra Ray | 16 5 | Third |
| | 179 | Bhubanmohan Poddar | 17-11 | Second. |
| | 180 | Bibhutibhushan Raychaudhuri .. | 16 1 | First |
| | 182 | Kalimohan Som ... | 19 1 | Second. |
| | 183 | Serajul Hoque Chowdhury ... | 17-2 | Second |
| | 184 | Khondoker Mohamed Mozibar Rahman ... | 17-8 | First |
| | | **Chikandi H. E. School.** | | |
| | 185 | Sudhirchandra Barari | 16-7 | First |
| | 187 | Subharanjan Chakrabarti ... | 16 1 | First |
| | 189 | Durgamohan Barari .. | 16-1 | Second |
| | 192 | Habibor Rahaman Meah ... | 17-2 | Second |
| | | **Bijhari H E. School.** | | |
| | 196 | Hemranjan De ... | 16-1 | First |
| | 197 | Abanranjan Gangopadhyay ... | 18-5 | First |
| | 198 | Indubhushan Ghatak . | 19-1 | First |
| | 199 | Birendrakumar Gupta (M) ... | 18-7 | First |
| | 200 | Bankimchandra Kar ... | 19-1 | Second. |
| | 201 | Manindrakumar Mukhopadhyay (m) ... | 17 | First. |
| | 202 | Manoranjan Mukhoti (m) ... | 17-11 | First |
| | 203 | Nepalchandra Mukhopadhyay ... | 16-9 | First. |
| | 204 | Satindramohan Mukhopadhyay ... | 16-11 | Second. |
| | 205 | Haripada Pal ... | 20-1 | First |
| | 207 | Satyendranath Bandyopadhyay ... | 20-7 | Second |
| | 210 | Indrabhusan De ... | 16-6 | Second |
| | 211 | Sudhirchandra De ... | 18 1 | Second |
| | 213 | Hemchandra Sengupta | 19 4 | Second |
| | 216 | Md Abdur Rahman ... | 23-1 | First |
| | | **Rudrakar Nilmani H. E. School.** | | |
| | 217 | Bhupendrachandra Chakrabarti (Mml) ... | 16-4 | First |
| | 218 | Kalipada Bandyopadhyay (Mm) ... | 20-9 | First |
| | 219 | Dwijendramohan Bhattacharyya (M) | 18-11 | First. |
| | 220 | Ramanikanta Chakrabarti (M) ... | 18-6 | First. |
| | 221 | Praphullakumar Chattopadhyay (V) | 18-1 | First. |
| | 223 | Bishnupada Chakrabarti, II (I) | 17-2 | First |
| | 225 | Bibekananda Mukhopadhyay (VL) ... | 18-1 | First |
| | 226 | Bishnupada Chakrabarti, I ... | 19-9 | Third. |
| | 227 | Abanikanta Dighal ... | 19-1 | First |

| Roll. | No. | Name. | Age | Division in which the candidate has passed. |
|---|---|---|---|---|
| | | **Khalia Rajaram Institution.** | | |
| Mad. | 228 | Surendramohan Chaudhuri (l) ... | 19-1 | First |
| | 229 | Jadabchandra Dasgupta (l) ... | 16-7 | First |
| | 232 | Ramammohan Gangopadhyay ... | 20 | Third. |
| | 233 | Sudhanwamohan Bandyopadhyay (M) | 19 | First |
| | 234 | Nisikanta Barari ... | 18-3 | Third |
| | 237 | Nilratan Ghoshal ... | 19-1 | Second |
| | 238 | Bijayranjan Bandyopadhyay ... | 17-1 | Second. |
| | 241 | Manodischandra Sanyal | 17-6 | First |
| | 242 | Satischandra Ghoshal | 19-4 | Second |
| | 243 | Kalimohan Bandyopadhyay ... | 17-5 | Second |
| | | **Tulasar Gurudas H. E. School.** | | |
| | 245 | Biswanath Bandyopadhyay ... | 16-1 | Second |
| | 248 | Prabodhchandra Chakrabarti ... | 17-7 | First. |
| | 250 | Jitendranath De ... | 18-3 | Second |
| | 252 | Manindramohan Gangopadhyay ... | 16-1 | First |
| | 253 | Panchanan Gop (Mml) | 18 | First |
| | 257 | Narendrakumar Mukhopadhyay ... | 16-2 | Second |
| | 261 | Mukundalal Sildas (m) | 18 3 | First |
| | 262 | Iamunikanta Tapadar | 17-8 | Third |
| | 263 | Prabhatchandra Bhattacharyya ... | 16-1 | Second |
| | 265 | Nanigopal Chattopadhyay ... | 17-8 | Second |
| | 269 | Ali Hossain Talukdar | 17-1 | Second |
| | | **Madaripur Islamia H. E. School.** | | |
| | 270 | Eskander Ali (Mm) ... | 19-4 | First |
| | 271 | Mahammad Badaruddin Sharif ... | 18 | Second |
| | 273 | Ali Ahmed Molla ... | 18-2 | First |
| | 274 | Magfaruddin Ahmed (Mm) ... | 16 2 | First |
| | | **Kaneswar Syamacharan-Edward Institution.** | | |
| | 276 | Harinath Bhattacharyya ... | 18-1 | First |
| | 278 | Abinaschandra Datta (m) ... | 17-3 | First |
| | 279 | Harendramohan Raychaudhuri ... | 17-2 | Second |
| | 280 | Surendrachandra Das (m) ... | 17-3 | First. |
| | 282 | Tripureswar Sil ... | 16-6 | First |
| | 283 | Jitendrachandra Datta | 18-1 | Second |
| | 286 | Narayanchandra Bandyopadhyay ... | 18-1 | Second |
| | 289 | Promodranjan Guha ... | 16-6 | Second. |
| | 290 | Herambaprasad Sanyal | 18-10 | Third |
| | 292 | Sachischandra Ray ... | 16-2 | Second |
| | | **Palong H. E. School.** | | |
| | 294 | Golam Ali Khan (m) | 18-9 | First |
| | 295 | Umeschandra Aditya | 17-1 | Second |
| | 296 | Makhamlal Bandyopadhyay (m) ... | 17-2 | First. |
| | 298 | Bireswar Bhattacharyya (M) ... | 17-3 | First. |
| | 299 | Sudhirchandra Gangopadhyay ... | 16-1 | Second. |
| | 302 | Bindyanath Sengupta | 16-2 | First. |
| | 305 | Sambhunath Gangopadhyay ... | 18-2 | Second. |
| | 307 | Haralal Kahali ... | 17-10 | First. |
| | | **Palong H. E. School.** | | |
| Mad. | 308 | Satyaprasanna Mitra ... | 21 | Second. |
| | 309 | Hiralal Sengupta ... | 18 2 | Second. |
| | 310 | Pareschandra Chakrabarti (m) ... | 18-2 | First |
| | 311 | Amulyacharan De (Mm) ... | 18-10 | First |
| | 312 | Bishadharan Mukhopadhyay (l) ... | 18-3 | First |
| | | **Kotwalipara Union Institution.** | | |
| | 314 | Abdur Rahaman Howladar ... | 22-1 | Second |
| | 315 | Asutosh Bhattacharyya (m) ... | 17-1 | First. |
| | 316 | Chintaharan Bhattacharyya (Mm) ... | 20 4 | First |
| | 317 | Chaturanan Chakrabarti | 16 10 | First. |
| | 318 | Jitendranath Chakrabarti .. | 16-6 | Second |
| | 319 | Ramanibinod Chakrabarti ... | 16-2 | First |
| | 320 | Gobindalal Chaudhuri | 18-4 | First |
| | 321 | Jatindranath Chaudhuri | 16 4 | First |
| | 323 | Bijayratan Dasgupta (m) ... | 17 | First. |
| | 324 | Sudhirratan Dasgupta | 16-9 | First |
| | 325 | Hirendramohan Kargupta .. | 18 5 | Second |
| | 326 | Bhudebchandra Madhu (m) ... | 17-2 | First |
| | 327 | Jaladhar Madhu (Mm) | 20 | First |
| | 328 | Makhanlal Samaddar .. | 16-2 | Second |
| | 329 | Sridhar Samaddar (m) | 18-11 | First. |
| | 330 | Amulyabandhu Bandyopadhyay .. | 18 | Second |
| | 332 | Srihar Chakrabarti ... | 17 | Second |
| | 333 | Kesablal Chaudhuri ... | 16 4 | First |
| | 335 | Sudhirkumar Dasgupta | 18-6 | Second |
| | 336 | Hrishikes Saha ... | 17 2 | Second |
| | 338 | Isanchandra Gautam .. | 16-1 | Second |
| | | **Chhaygaon Madhusudan H. E. School.** | | |
| | 339 | Kalimohan Rauth ... | 16-5 | Second. |
| | 341 | Satyaranjan Chaudhuri | 19-1 | Second |
| | 343 | Ramanikanta Gangopadhyay (Mm) ... | 16-5 | First. |
| | 345 | Gopalchandra De (m) ... | 18-3 | First. |
| | 349 | Umeschandra Bandyopadhyay ... | 19-7 | Second |
| | 351 | Safiuddin Shikder ... | 18 2 | Third. |
| | | **Woolpur P. O. H. E. School.** | | |
| | 353 | Bimalchandra Basu (Mml) ... ... | 16-7 | First. |
| | 354 | Amritalal Datta ... | 19-9 | Third. |
| | 355 | Jitendranath De (Mm) | 18-9 | First |
| | 356 | Manoranjan Ghosh (Mm) ... ... | 16-1 | First. |
| | 357 | Satadhar Ghoshdastidar (M) ... | 17-1 | First. |
| | 358 | Dineschandra Ghoshdastidar ... | 18-7 | Second. |
| | 359 | Manoranjan Mitra ... | 17 3 | First. |
| | 360 | Sudhendulal Musrip ... | 16-1 | Second. |
| | 362 | Dhirendranath Raychaudhuri (m) ... | 17-1 | Second. |
| | 365 | Haranchandra Raychaudhuri ... | 17-7 | First. |
| | 366 | Jitendranath Biswas ... | 17.6 | Third. |
| | 368 | Girischandra Raha ... | 21-1 | Third. |

| Roll. | No. | Name. | Age. | Division in which the candidate has passed. |
|---|---|---|---|---|
| | | **Domchar Jogatchandra Institution.** | | |
| Mad. | 370 | Sudhirkumar Bandyopadhyay ... | 17-8 | Second |
| | 371 | Bimalendu Dasgupta ... | 18-9 | First |
| | 372 | Mahendrachandra Datta | 19-4 | Second |
| | 374 | Satyagopal Ray .. | 16-7 | Second |
| | 377 | Ramanranjan Saha ... | 16-7 | Second |
| | 380 | Hemchandra Chakrabarti ... ... | 19-6 | Third. |
| | | **Mustafapur H. E. School.** | | |
| | 388 | Asutosh Chakrabarti (ML) ... ... | 18 | First |
| | 389 | Indubhushan Guha ... | 17-8 | Second |
| | 390 | Nagendranath Sengupta | 23 | Second |
| | 391 | Kiranchandra Chaudhuri ... | 19-1 | Third |
| | | **Shibchar Nandakumar Institution.** | | |
| | 396 | Ramapati Chattopadhyay ... | 20-11 | First |
| | 397 | Abdul Karim Mridha (u) .. | 20-8 | First |
| | | **Madaripur Islamia H. E. School.** | | |
| | 400 | Syed Shamsuddin Ahmed ... | 17-2 | Second |
| | | **Kanaat H. E. School.** | | |
| Mal. | 1 | Narendranath Das ... | 19-11 | First |
| | 2 | Krishnagopal Baral ... | 19-2 | Second |
| | 3 | Brajendranandan Nath | 17-1 | First. |
| | 4 | Nanigopal Pal ... | 16-10 | Second |
| | 5 | Gosthabihari Das ... | 17-3 | First |
| | 6 | Gobindchandra Saha ... | 19-1 | Third |
| | 8 | Habibar Rohaman . | 18 2 | Second |
| | 9 | Sajjadali Miah ... | 18-1 | Second |
| | 11 | Eunush Ahamed Miah | 16-7 | Second |
| | 12 | Md Abdul Jalil .. | 17-10 | Third |
| | 13 | Tajed Ali Khan ... | 20 9 | Second |
| | 15 | Md Hashimuddin Mia V ... | 17-5 | First |
| | 16 | Monjur Ahamed Choudhury ... | 19-11 | Second |
| | 17 | Nesh Mahammad Mia | 20-6 | First |
| | | **Chanchal Siddeswari Institution.** | | |
| | 18 | Saileswar Basusarbadhikari (VL) ... | 18-2 | First. |
| | 19 | Anirudha Sukul (l) ... | 18-10 | First. |
| | 20 | Sudhirchandra Sarkar (Mm) ... | 17 | First. |
| | 21 | Dhirendranath Das ... | 17 4 | First. |
| | 22 | Brajabhushan Das ... | 16-10 | First. |
| | 23 | Durgeschandra Ray (M) ... | 17-6 | First |
| | 24 | Raghunath Sinha ... | 26-8 | First. |
| | 25 | Sudhirkumar Daughosh ... | 16-9 | First |
| | 26 | Pankajkumar Basu (V) | 18-4 | First. |
| | 27 | Jyotischandra Lal (V) | 19-2 | First |
| | 28 | Dharandhar Gangopadhyay ... | 20-3 | Second |
| | 29 | Umeschandra Karmakar ... | 22-5 | First. |
| | 30 | Lakshminarayan Sinha | 20-3 | First |
| | 31 | Chandicharan Sinha .. | 18 8 | First |
| | 33 | Sudhirchandra Das ... | 17 | First. |
| | 34 | Tarapada Mustra ... | 16-8 | First |
| | 35 | Krishnacharu Biswas ... | 19-1 | Second. |
| | 38 | Ramraghab Lahiri ... | 16 | First |
| | 39 | Jogendranath Das ... | 16-5 | First. |
| | | **Chanchal Siddeswari Institution.** | | |
| Mal. | 40 | Haripada Bandyopadhyay ... | 16-1 | Second |
| | 41 | Shaik Kalimuddin Ahammad ... | 17-3 | Second |
| | 42 | Shaikh Jalaluddin Ahamed ... | 19 3 | Second |
| | 43 | S K. Faizuddin Ahamed (M) ... | 19-5 | First |
| | 44 | Shaik Maslehuddin Ahamed ... | 20-8 | First |
| | 45 | Shaikh Kamaruddin Ahamed (M) ... | 18-4 | First |
| | | **Akrurmani Coronation Institution, Malda.** | | |
| | 47 | Md Shamsuddin ... | 18-5 | First |
| | 48 | Shaikh Sajadali (M) ... | 17 6 | First. |
| | 49 | Shaikh Serajuddin ... | 16-8 | First. |
| | 50 | Bhudeb Mukhopadhyay ... | 16-2 | First |
| | 51 | Binaybhushan Lahiri ... | 16-11 | First |
| | 52 | Satyaranjan Sinha ... | 18-3 | Second |
| | 53 | Karunasindhu Mukhopadhyay ... | 18-10 | Second |
| | 54 | Ambikapada Chattopadhyay .. | 17-7 | First |
| | 55 | Ramanikanta Sarkar ... | 19 | Second |
| | 56 | Surendranath Sarkar . | 16-2 | Second |
| | 58 | Nandagopal Set ... | 17 7 | Second |
| | 59 | Subodhkumar Biswas (V) ... | 16-3 | First |
| | 60 | Kalipada Lahiri ... | 17-2 | Second |
| | 62 | Dinabandhu Ghosh ... | 18 3 | Second |
| | | **Nagharia H. E. School.** | | |
| | 65 | Nalinranjan Datta (Mm) ... | 16 2 | First |
| | 66 | Panchanan Mandal (M) .. | 18-6 | First |
| | 67 | Lokeswar Sinha ... | 16-2 | First |
| | 68 | Bhabanicharan Biswas | 18-7 | Second |
| | 69 | Jyotilal Misra .. | 17-6 | First. |
| | 70 | Nidhuchandra Kumar... | 19-5 | Second |
| | 71 | Mahamad Lateef Hossain ... | 16-7 | Second |
| | 72 | Jyotischandra Misra ... | 18-4 | Second |
| | 73 | Mohinimohan Misra ... | 21-2 | First |
| | 74 | Surendranath Sinha ... | 19-1 | Second |
| | 76 | Abauddin Mandal (M) | 18-3 | First |
| | | **Bholahat Rameswar Institution.** | | |
| | 77 | Rajendranath Haldar . | 20-11 | Second |
| | 79 | Jatindranath Mitra .. | 19-3 | Second |
| | 80 | Manmathanath Das .. | 17-5 | Second |
| | 81 | Tayab Hossain . | 22-8 | Second. |
| | 82 | Md Mozher Hossain (Mm) ... | 18-1 | First |
| | | **Nawabganj Harimohan Institution.** | | |
| | 83 | Prithwiswar Bandyopadhyay .. | 18 | First |
| | 84 | Atulchandra Raychaudhuri (M) ... | 19-5 | First. |
| | 85 | Basantakumar Pal (Mm) ... | 23 2 | First |
| | 86 | Phabeschandra Das ... | 18-7 | Third. |
| | 88 | Manmathanath Bandyopadhyay ... | 17-7 | First. |
| | 89 | Rathindranath Mallik .. | 17 2 | First |
| | 90 | Jagannath Raychaudhuri ... | 16-10 | Second. |
| | 91 | Manmathanath Saha ... | 16-1 | First |
| | 92 | Karunasindhu Goswami | 18 7 | Third. |
| | 94 | Dhirendranath Gangopadhyay ... | 17-9 | Third. |

| Roll. | No. | Name. | Age. | Division in which the candidate has passed. |
|---|---|---|---|---|
| | | **Nawabganj Harimohan Institution.** | | |
| Mal. | 95 | Karunasindhu Das ... | 17 | Second |
| | 96 | Mohammed Mommul Haque (M) ... | 16 | First |
| | 97 | Mahammed Lutful Hoque (M) ... | 16 1 | First. |
| | 98 | Mahammed Mashdul Haque .. | 16-6 | Second. |
| | 99 | Majibor Rahman ... | 18-3 | Second |
| | 101 | Serajul Islam ... | 17-11 | Second |
| | 102 | Abdar Rasid (m) ... | 18-4 | First. |
| | 105 | Abdul Momen ... | 17-1 | First |
| | 106 | Shish Ahmed ... | 17-11 | Second |
| | 112 | Rasidul Hoque ... | 18 6 | Second |
| | 113 | Abul Hashem Khan ... | 16 | First |
| | 114 | Mohammad Mohsen Ali ... | 19-9 | Third |
| | | **Maldah Zila School.** | | |
| | 116 | Madanmohan Chakrabarti .. | 20-4 | Second |
| | *117 | Sasankasekhar Chakrabarti (MLVm) ... | 16 | First |
| | 118 | Amarnath Chattopadhyay (Mm) ... | 16-8 | First |
| | 120 | Sureschandra Das (VI) | 18-1 | First |
| | 121 | Birendrakrishna Ghosh (MVm) ... | 16 | First. |
| | 122 | Byomkes Kumar ... | 17 9 | Second |
| | 123 | Gobindagopal Mitra ... | 18-1 | Second |
| | 124 | Jyotirmay Mukhopadhyay (m) ... | 16 2 | First |
| | 125 | Praphulladhan Mukhopadhyay (m) ... | 16-5 | First |
| | 126 | Jadabchandra Ray ... | 17 | First |
| | 127 | Upendranath Sarkar ... | 16-10 | First |
| | 128 | Jatindrakumar Sarkar (m) ... | 18-7 | First |
| | 129 | Sailajapada Bhattacharyya ... | 17 8 | First |
| | 130 | Bhupendranath Chakrabarti ... | 20-1 | Second |
| | 131 | Satyanarayan Das ... | 20-9 | Second |
| | 132 | Nabagopal Dasgupta ... | 16-5 | First. |
| | 133 | Mahamed Abdus Samad | 21-1 | First |
| | 135 | Bibhutibhushan Ray ... | 17-1 | Second |
| | 136 | Nangopal Datta (m) ... | 16-4 | First. |
| | 137 | Atulchandra Kumar ... | 17 10 | First. |
| | 138 | Satyendranarayan Misra ... | 17-11 | First |
| | 140 | Mahammad Kamuddin Mia (m) ... | 17-2 | First. |
| | 141 | Safayetulla Dewan (M) | 17-1 | First |
| | 142 | Abdur Rashid Miah ... | 16-6 | Second |
| | 143 | Sharfuddin Ahmed (Ll) ... | 16-4 | First. |
| | 144 | Md. Fazlul Haque (M) | 18-1 | First |
| | 145 | Azharuddin Ahmed ... | 18-3 | First |
| | 146 | Md. Abdul Karim ... | 16-8 | First |
| | 147 | Jaynal Abedin ... | 18-8 | First. |
| | 148 | Asadullah Chaudhury (l) ... | 16-2 | First |
| | *149 | Shaikh Liaquat Hossain (Mm) .. | 18-1 | First |
| | 150 | Hasibuddin Ahmed ... | 17-1 | First |
| | *151 | Habibuddin Ahmed (Mmc) ... | 16-8 | First |
| | 152 | Dewan Nasmul Haque (Mm) ... | 16-2 | First. |
| | 153 | Md Sekandor Ali ... | 18-2 | Second |
| | 154 | Md. Mashaeul Islam ... | 17-3 | Second |
| | 155 | Shaikh Kherajuddin Ahmed. | 19 2 | First. |
| | | **Nagharia H. E. School.** | | |
| | 157 | Abdul Majid Shaikh ... | 17-3 | Second. |
| | | **Maldah Zila School.** | | |
| Mal. | 158 | Radhakacharan Das ... | 16-11 | First. |
| | | **Manikganj H. E. School.** | | |
| Man. | 1 | Bidhubhushan Bhattacharyya (Lm) ... | 19-8 | First. |
| | 2 | Sankarprasad Bhattacharyya (MLm) ... | 19-2 | First |
| | 3 | Bankimchandra Das (M) | 17-4 | First |
| | 4 | Dhirendranath Das (Mm) .. | 17-2 | First. |
| | 5 | Rabindranath Guhamajumdar (MLm) ... | 16-5 | First. |
| | 6 | Brajendrakumar Ghosh (MLm) ... | 18-8 | First. |
| | 7 | Sisirkumar Ghosh (MLm) ... | 16-5 | First |
| | 8 | Sureschandra Mukhopadhyay (Lm) ... | 16-3 | First. |
| | 9 | Anilchandra Ray (MLm) | 16-3 | First. |
| | 10 | Phanindramohan Saha (Mm) ... | 18 | First |
| | 11 | Radhaballabh Saha ... | 18-7 | Second |
| | 12 | Upendraprasad Sarkar (M) ... | 21 | First. |
| | 13 | Kalidas Guha (M) ... | 16 | First. |
| | *14 | Prabodhchandra Gupta (ML) ... | 16-3 | First |
| | 15 | Harendranarayan Ghosh | 17-11 | Second. |
| | 16 | Nareschandra Ghosh .. | 17-2 | First. |
| | 17 | Bhupatinath Ghosh ... | 17-11 | Second |
| | 18 | Paresnath Ghosh ... | 21-2 | Second |
| | 19 | Bhabeschandra Raychaudhuri ... | 18-1 | First. |
| | 20 | Jatindramohan Saha ... | 20-1 | Second. |
| | 22 | Satindranath Sarkar ... | 19-7 | Second |
| | 23 | Taranikanta Sarkar ... | 18-2 | Second |
| | | **Ballati Iswarchandra H. E. School.** | | |
| | 24 | Indubhushan Majumdar (MVm) ... | 16 1 | First |
| | 25 | Subodhkumar Raychaudhuri ... | 16 2 | Second. |
| | 26 | Krishnakanta Basak ... | 17-6 | First |
| | 27 | Sureschandra Sarkar (M) ... | 16-3 | First. |
| | 29 | Praphullachandra De (M) ... | 20 | First. |
| | 30 | Dhirendrakumar Saha, I (M) ... | 19-3 | First. |
| | 31 | Kiranchandra Saha ... | 20-1 | Second. |
| | 32 | Dhirendrakumar Saha, II ... | 20-10 | Second. |
| | 33 | Shek Ahsanuddin ... | 17-2 | Second. |
| | | **Rowita High School.** | | |
| | 34 | Jogendrakumar Saha | 17-2 | Second. |
| | 35 | Amiyabhashan Ray (Mm) ... | 18-2 | First. |
| | 36 | Purnachandra Chakrabarti (m) ... | 17-7 | First |
| | 37 | Suchindramohan Ray | 17-1 | First. |
| | 38 | Debendranath Kar ... | 17-3 | Second. |
| | 39 | Nirmalchandra Gupta | 18 | First. |
| | 40 | Thakurdas Bhattacharyya ... | 20 | First. |
| | 41 | Bikaschandra Chakrabarti ... | 21 3 | Second. |
| | 42 | Satismohan Chakrabarti | 21 | Second. |
| | 43 | Nagendralal Chakrabarti ... | 19-11 | Second. |
| | 45 | Naynuddin Moshi ... | 17-7 | Second. |
| | 46 | Anisuddin Miah ... | 19-2 | Second. |

| Roll. | No. | Name. | Age. | Division in which the candidate has passed. |
|---|---|---|---|---|
| | | **Tapta Academy.** | | |
| Mat. | 47 | Md. Abul Basher ... | 18-10* | First |
| | 48 | Jamiuddin Ahmed ... | 19-1 | Second |
| | 49 | Jasimuddin Ahamed ... | 21-8 | Second |
| | 50 | Mawlali Mia ... | 16-9 | First |
| | 51 | Ajitananda Bhattacharyya ... | 18-2 | First. |
| | 52 | Sureschandra Chaudhuri ... | 17-2 | Second |
| | 53 | Manikchandra Dasgupta ... | 17-11 | Second. |
| | 54 | Mohinikanta Guha (m) | 17-3 | First |
| | 55 | Dineschandra Ghosh ... | 19-1 | Second. |
| | 56 | Srischandra Ghosh (m) | 16 | First |
| | 57 | Meghlal Karar ... | 20 6 | First |
| | 58 | Sudhirchandra Ray ... | 19 | First |
| | 59 | Surenkramohan Saha (Mm) ... | 16-2 | First |
| | 60 | Syamapada Sarkar ... | 20 | Second. |
| | 61 | Saratchandra Sarkar ... | 21-1 | Third |
| | 62 | Satischandra Sinha (m) | 19-3 | First |
| | 63 | Jogeschandra Guha ... | 16-7 | Second |
| | 64 | Herambasankar Ray ... | 16-5 | First |
| | | **Dhulia Bhubanmohan H. E. School.** | | |
| | 66 | Sheik Syadah ... | 22 2 | Second |
| | 67 | Debiprasanna Chakrabarti ... | 19-3 | First |
| | | **Manikganj H. E. School.** | | |
| | 68 | Adyaprasad Datta . | 21-8 | Second |
| | 69 | Ramanikisor Sarkar .. | 21 2 | First |
| | | **Midnapur Hindu School.** | | |
| Mid. | 1 | Birendranath Basu ... | 16-1 | Second |
| | 3 | Niharnath Bagchi .. | 16-2 | Second. |
| | 7 | Sasadhar Bhakat ... | 16-10 | Second. |
| | 8 | Debendranath Sanyal | 19 | Third |
| | 9 | Narayankisor Chaudhuri | 17-6 | Second |
| | 10 | Syamapada Ray ... | 17-2 | Second |
| | 11 | Sailendranath Basu (m) | ... | First. |
| | 14 | Jayantikumar Faujdar | 18-3 | First |
| | 15 | Debendranath Ray ... | 17-5 | First |
| | 16 | Jamunaprasad Saha ... | 19-11 | Second |
| | 17 | Anadicharan Mukhopadhyay ... | 20-6 | Second |
| | 20 | Jatadhari Basu ... | 19-2 | First |
| | 21 | Benudhar Panda (M Lm) ... | 16-3 | First |
| | 22 | Sarojbihari Chanda ... | 20 10 | Second |
| | 24 | Madhusudan Mukhopadhyay ... | 17 1 | Third |
| | | **Midnapur Town School.** | | |
| | 28 | Kamalakanta Basu (m) | 16-6 | First. |
| | 30 | Radhasyam Chakrabarti | 17-3 | Second |
| | 31 | Harisadhan Das ... | 17-1 | First. |
| | 32 | Lakshmikanta Das ... | 17 11 | Second |
| | 33 | Bishnupada De ... | 19-10 | First |
| | 34 | Krishnachandra De ... | 16-1 | Second |
| | 36 | Ramratan De ... | 16 5 | First. |
| | 37 | Ajitranjan Datta (m) | 16 7 | First |
| | 38 | Girijabhushan Goswami (Mm) ... | 17 | First. |
| | 39 | Sudhiranjan Jana ... | 16-9 | First |
| | 42 | Trailokyanath Misra (Mm) ... | 18-2 | First |
| | 44 | Santabhushan Nandi ... | 19-5 | Third. |
| | 45 | Kumudchandra Patra (Mm) ... | 18-8 | First. |
| | 46 | Suryyakumar Patra (M) ... | 20-8 | First. |
| | 47 | Rajanikanta Phusti (m) | 16 | First. |
| | 48 | Mangalaprasad Ray ... | 19-6 | First. |

| Roll | No | Name. | Age | Division in which the candidate has passed. |
|---|---|---|---|---|
| | | **Midnapur Town School.** | | |
| Mid. | 49 | Bhupaticharan Sen ... | 21-1 | Third. |
| | 50 | Amulyachandra Sinha | 19-9 | Third |
| | 51 | Bilaichandra Sinha (m) | 17-1 | First |
| | 52 | Asutosh Datta (m) ... | 17-1 | Second |
| | 53 | Purnendukumar Datta | 16-5 | Second. |
| | 54 | Nisithkumar Majumdar | 16-3 | First |
| | 55 | Bibhutibhushan Mukhopadhyay ... | 16-8 | First |
| | 56 | Baidyanath Biswas .. | 16-6 | Second |
| | 57 | Rajanikanta Rath ... | 21-2 | Second |
| | 58 | Radhaballabh Sinha ... | 17-5 | Third. |
| | 61 | Saratchandra Ghosh ... | 21-1 | Third |
| | 62 | Jatindrakumar Mangal | 18 5 | Second |
| | 65 | Rampada Ghosh ... | 22-4 | Second |
| | 66 | Prithwinath Mahapatra | 20 2 | Second |
| | 67 | Syed Abdur Rashid .. | 22 | Third |
| | 69 | Syed Nasiruddin Ahmed (Mm) ... | 17 5 | First |
| | | **Garbeta H. E. School.** | | |
| | 70 | Jugalkisor Acharyya . | 17-11 | First |
| | 71 | Bholanath Bhattacharyya .. | 19-1 | Second |
| | 72 | Jagatbandhu Bhattacharyya (Mml) . | 17-11 | First |
| | 73 | Radhaballabh De (m) .. | 19 2 | First |
| | 74 | Birendranath Ghosh (Mm) ... | 17-6 | First. |
| | 75 | Sachindranath Ghosh | 21 1 | Second |
| | 76 | Ramchandra Guin . | 18-4 | First |
| | 77 | Tarinicharan Kar ... | 18-10 | Second |
| | 78 | Manindranath Kolya ... | 19 | First. |
| | 79 | Bankimbihari Mandal | 17-3 | First |
| | 80 | Bidhubhushan Mandal (m) ... | 17-1 | First. |
| | *81 | Gaurchandra Misra (MLml) . | 19 11 | First |
| | 82 | Krishnagopal Piri (m) | 20-4 | First. |
| | 83 | Bibhutibhushan Pramanik ... | 19 | First. |
| | 84 | Amulyaratan Pratihar (Mm) ... | 18 | First. |
| | *85 | Haragauri Ray (MLml) ... | 16 3 | First |
| | 86 | Narayanchandra Sinhamahapatra (MLml)* | 19 9 | First |
| | 87 | Surendranath Sural (m) | 18-11 | First. |
| | | **Midnapur Collegiate School.** | | |
| | 89 | Bhupendranath Masti | 18-4 | Second |
| | 90 | Sasankasekhar Mandal | 20 4 | First. |
| | 91 | Kalicharan Bandyopadhyay (Mm) ... | 18 | First |
| | *92 | Sailendrachandra Mukhopadhyay (MLml) | 16-6 | First |
| | 93 | Santoshkumar Guin (Mm) ... | 17-10 | First |
| | 94 | Gauranga Sinhamahapatra ... | 19 | First. |
| | 95 | Umeschandra Pal ... | 20-9 | First. |
| | 96 | Sohagkusum Misra (MLm) ... | 16-11 | First |
| | 97 | Kisorimohan Mukhopadhyay (Mm) ... | 16-8 | First |
| | 98 | Hrishikes Misra (MLml) ... | 16-5 | First |
| | 99 | Sachindrakrishna Ghose (m) ... | 18-4 | First |
| | 100 | Naranarayan Mahapatra | 20 6 | Third |
| | 101 | Satyasundar Ghosh ... | 17-3 | First |
| | 102 | Asutosh Sarangi ... | 17-11 | Second |
| | 103 | Hemendranath Sarkar | 16-2 | First |
| | 104 | Kalipada Satpati ... | 20-1 | Second |

| Roll. | No | Name. | Age. | Division in which the candidate has passed |
|---|---|---|---|---|
| | | **Midnapur Collegiate School.** | | |
| Mid. | 105 | Sasankasekhar Bandyopadhyay (Mm) ... | 17-7 | First |
| | 106 | Kshirodchandra Pani ... | 20-2 | Second |
| | 107 | Pramadacharan Gangopadhyay ... | 20-2 | First |
| | 108 | Santoshkumar Ghosh | 16-2 | First. |
| | 109 | Chunilal Mitra ... | 18-1 | First |
| | 111 | Bankimchandra Mandal | 16-10 | Second |
| | 112 | Samarendraprasad Hajra ... | 16-4 | Second |
| | 113 | Sureschandra Ray (Mm Mc) ... | 17 11 | First |
| | 114 | Bibhutibhushan Jana (m) ... | 17-3 | First |
| | 115 | Praphullakumar Sengupta (m) ... | 17-3 | First |
| | 116 | Phanibhushan Sarkar (Mm Mc) .. | 16-1 | First |
| | 117 | Amalkrishna Sarkar (Mm Mc) .. | 18-2 | First |
| | *118 | Nibasicharan Maiti (MLm Mc) ... | 17-3 | First |
| | 119 | Hrishikes De ... | 18-1 | First |
| | 121 | Sachindranath Kundu | 17-6 | Second |
| | 122 | Chandrasekhar Mitra ... | 17-10 | First |
| | 123 | Harihar Dasmahapatra | 17-5 | First |
| | 124 | Baidyanath Das ... | 18-11 | Second |
| | 125 | Sauricharan Mukhopadhyaay ... | 16 | Second |
| | 127 | Bijaykrishna Ghosh .. | 19-5 | Second |
| | 128 | Sachindranath Mitra ... | 19-2 | First |
| | 129 | Ramgobinda Datta ... | 18 9 | Third |
| | 130 | Sujanranjan Rakshit | 17-3 | Second |
| | 131 | Nrityagopal Maiti ... | 18-5 | Second |
| | 132 | Radhasyam Ray .. | 16 1 | Second |
| | 133 | Satyansumohan Datta | 19-6 | Second |
| | 134 | Susilkumar Mitra ... | 16 3 | Third |
| | 135 | Binajiban Ghose (H) | 16-9 | First. |
| | 136 | Kisoriprasad Bhanj ... | 20-2 | Second |
| | 137 | Syamsundar Das ... | 16 1 | First |
| | 138 | Mahendranarayan Panda (M) ... | 19 1 | First |
| | 139 | Radhakrishna Bala ... | 18-5 | Second |
| | 141 | Shaikh Darastulla (Mm) | 21-1 | Second |
| | 142 | Shaikh Ummar ... | 22 | Second |
| | | **Ghatal H. E. School.** | | |
| | 143 | Manoranjan Bandyopadhyay (ML) .. | 16-2 | First |
| | 144 | Durgapada Ghatak (Mml) ... | 16-6 | First |
| | 145 | Snehabhushan Chakrabarti (m) .. | 18-3 | First. |
| | 146 | Kshirodmohan Dasadhikari ... | 18 | First |
| | 147 | Gopeswar Bandyopadhyay ... | 16-5 | Second |
| | 148 | Siddheswar Datta ... | 18 | Second |
| | 149 | Narayanchandra Chakrabarti .. | 17-5 | Second |
| | | **Birsingha Bhagabati Vidyalaya.** | | |
| | 150 | Dharmadas Ghosh ... | 20-8 | Second |
| | 151 | Bibhutibhushan Kabiraj ... | 22 | Second |
| | 152 | Ramsaran Ray ... | 21-4 | Second. |
| | 153 | Purnananda Jana ... | 19-4 | Second. |
| | 154 | Tulasidas Pal ... | 17-3 | Second |
| | 155 | Harihar Konar ... | 20-1 | Second. |
| | 156 | Ramgoti Palodhi ... | 24 | Second. |
| | | **Kharagpur B. N. Railway Indian High School.** | | |
| | 157 | Rayisuddin Ahmad ... | 16 1 | First. |
| | 158 | Rasbihari Bandyopadhyay (MLmG) ... | 18-7 | First. |
| | | **Kharagpur B. N. Railway Indian High School.** | | |
| Mid. | 159 | Baidyanath Bandyopadhyay ... | 16-1 | First |
| | 160 | Niradachandra Lahiri ... | 19-2 | Second. |
| | 162 | Bholanath Biswas ... | 16-10 | Second |
| | 163 | Chandrasekhar Bajpai | 17-1 | First |
| | 164 | Shyamnarayan Bajpai | 16-3 | First |
| | 165 | Padamakerkrishna Rao Bhane (m) ... | 16-2 | First. |
| | 166 | Dinakar Moreshwar Kuntay ... | 19-1 | First |
| | 167 | Mahadeo ... | 17 3 | Second |
| | 168 | Purshottam Tewary ... | 19-2 | Second |
| | 169 | Syedali Nazir Ahmad | 17-4 | First. |
| | 170 | Sambhunath Kaul ... | 16-9 | First |
| | 171 | Raghubir Pershad ... | 16-3 | First |
| | | **Jara Government Aided H. E. School.** | | |
| | 172 | Paritoshkumar Barik (Mm) ... | 16-9 | First |
| | 173 | Goshthbihari Sarkar ... | 20-9 | First |
| | 174 | Krishnachandra Sarkar | 19-5 | Second |
| | 175 | Panchanan Kundu ... | 17-4 | Second |
| | | **Pingla Krishnakamini Institution.** | | |
| | 176 | Prankrishna De ... | 17-1 | Second |
| | 177 | Jnanendranath Maiti (M) ... | 18-3 | First |
| | 178 | Bhubanchandra Bera | 19-11 | Second |
| | 179 | Jnanendranath Bhunia | 21-3 | First |
| | 180 | Girischandra Hajra ... | 17 4 | First |
| | 181 | Radharaman Sinha ... | 18-9 | Second |
| | 182 | Sibadas Bhattacharyya | 21-1 | Second |
| | | **Midnapur Collegiate School.** | | |
| | 183 | Jaminimohan Sarkar (MLm) ... | 16-5 | First |
| | 187 | Partulchandra Basu ... | 16 | First |
| | | **Chandrakona-Jirat H. E. School.** | | |
| | 190 | Paresnath Ghosh ... | 18-2 | Second |
| | 191 | Jatindranath Chaudhuri | 22-1 | Second |
| | 192 | Kanailal Mandal (m) ... | 19 | First |
| | 193 | Ramgati Datta ... | 20-2 | Third |
| | 194 | Atulchandra Ghosh ... | 17-8 | Second |
| | 198 | Sarasibhushan Basu ... | 17 8 | Second |
| | 199 | Manmathanath Sengupta ... | 16 2 | Second |
| | 200 | Satischandra Das ... | 20-7 | Second |
| | 202 | Gaurmohan Santra ... | 20 | Second |
| | 204 | Bhubaneswar Bandyopadhyay ... | 17-11 | First |
| | 205 | Paresnath Ray ... | 17-3 | Second |
| | 206 | Paresnath Bandyopadhyay ... | 22-6 | Second. |
| | 207 | Manotosh Datta ... | 17-4 | First. |
| | 208 | Radharaman Sinha .. | 18-2 | First |
| | | **Female Private Student.** | | |
| Mid. F. P. | 1 | Renu Dasgupta ... | ... | Second |
| | | **Private Student.** | | |
| Mid. P. | 1 | Bijanbihari Bhattacharyya (L) ... | 16-7 | First. |
| | 2 | Syed Shamsuddoha ... | 19-6 | Second. |
| | 3 | Syed Abdul Jabbar .. | 18-6 | First |
| | | **Teacher.** | | |
| Mid. T. | 1 | Dhanaram Hembram ... | 24-9 | Second. |

| Roll. | No. | Name. | Age. | Division in which the candidate has passed. |
|---|---|---|---|---|
| | | **Hashara Kaliklshore High School.** | | |
| Muns. | 1 | Annadacharan Das (m) | 16-11 | First |
| | 2 | Trailokyanath Pal (MLm) ... | 18-1 | First |
| | 3 | Manoranjan Bhaumik | 17-4 | Second |
| | 4 | Satischandra Das ... | 18-9 | First |
| | 5 | Nisikanta Das ... | 19-3 | Third |
| | 7 | Dhirendramohan Kar ... | 18-8 | Second |
| | 11 | Subodhchandra Sengupta ... | 18-11 | Third |
| | 12 | Abdul Gofur Khan ... | 19-7 | Second |
| | 15 | Hemchandra Chakrabarti (MLml)* ... | 17-5 | First |
| | | **Kazirpagla A. T. Institution.** | | |
| | 16 | Biswambar Sarkar ... | 19-1 | First |
| | 17 | Binodbihari Mallik (m) | 17-1 | First |
| | 18 | Priyabandhu Chakrabarti ... ... | 17-3 | First |
| | 19 | Jyotischandra Baksi | 16 | Third |
| | 20 | Nityananda Sil . | 20 1 | Second |
| | 21 | Jagadischandra Pal . | 18 | Second |
| | 22 | Harratosh Guha . | 16-11 | First |
| | 23 | Rameschandra Das .. | 17-5 | Second |
| | 24 | Md Dabiruddin Khan | 17-2 | Second |
| | 25 | Sayudul Haque .. | 18 | Second |
| | 27 | Ismail Talukdar . | 17 8 | First |
| | 28 | Afsaruddin Ahmed .. | 16 2 | First |
| | | **Lohajang High School.** | | |
| | 30 | Kshitindrakumar Mukhopadhyay (MLm) | 18-5 | First |
| | 31 | Smarranjan Sengupta (Mm) ... | 17 1 | First |
| | 32 | Narayanlal Palchaudhuri (Mm) ... | 16-3 | First. |
| | 33 | Amulyakrishna Chaudhuri ... .. | 20-3 | Second |
| | 34 | Pulinbihari Chaudhuri | 17-5 | First. |
| | 36 | Madhusudan Pal ... | 16-4 | First |
| | 38 | Satischandra Kunda (Mm) ... | 17-1 | First |
| | 39 | Jogeschandra De (M) | 17 1 | First |
| | 40 | Apurbahari De (M) ... | 18-1 | First |
| | 41 | Priyanath Chattopadhyaay ... | 18-1 | Second |
| | 42 | Ahmed Hossain Fakir | 19 3 | Second |
| | 45 | Jyotiballabh Pal ... | 17-1 | Second |
| | 46 | Jnanendrachandra Chakrabarti ... | 17-1 | Second. |
| | 47 | Sudhansusekhar Sarkar | 17-1 | Second. |
| | | **Brahmangaon H. E. School.** | | |
| | 48 | Sudhirchandra Chakrabarti ... | 16 7 | Second. |
| | 49 | Narendranath De (M) | 19-1 | First |
| | 50 | Niharranjan Ghosh ... | 17-1 | First. |
| | 51 | Manindramohan Sil (m) | 16 | First |
| | 52 | Santoshchandra Sil (Mm) ... | 16-4 | First |
| | 53 | Amulyamohan Barari (H) ... ... | 17-1 | First |
| | 54 | Brajendralal Bandyopadhya (MLH) ... | 16-7 | First. |
| | 55 | Sasankamohan Chakrabarti ... | 17-1 | First |
| | 56 | Saileschandra De ... | 17-1 | Second |
| | 57 | Sureschandra Pal ... | 18-1 | Second. |
| | 58 | Kafiluddin Ahmed ... | 19-1 | Second. |
| | 59 | Abdur Razzaque Miah | 17 | First. |
| | 60 | Abdul Aziz Akan ... | 18 2 | Second. |
| | | **Mallikhanganji. E. School.** | | |
| | 62 | Habibullah Mia (Mm) | 17-2 | First. |
| | 63 | Anantamohan Chanda | 19-2 | Second |
| | 64 | Nripendrachandra Chakrabarti ... | 17-2 | First |

| Roll. | No | Name | Age | Division in which the candidate has passed. |
|---|---|---|---|---|
| | | **Haidia G. R. B. M. Institution.** | | |
| Muns. | 65 | Manomohan Banik (M) | 16-10 | First |
| | 66 | Sudhirkumar Maulik (Mm) ... | 16 | First |
| | 67 | Syamlal Saha (Mm) ... | 17-3 | First |
| | 68 | Gauranganchandra Das | 19-1 | Second |
| | 69 | Jadablal Banik (Mm) | 16 | First |
| | 70 | Haripada Guha ... | 17-6 | Second |
| | 71 | Indubhushan Kundu ... | 17-4 | Second. |
| | | **Siddheswari A. C. Institution.** | | |
| | 72 | Chittaranjan Mitra .. | 21-2 | Second |
| | | **Brahmanbhita Union Institution.** | | |
| | 73 | Abdul Ali Meah . | 16 7 | First |
| | 74 | Asutosh Mitra (M) ... | 17-2 | First |
| | 75 | Jaminikanta Bhawal (Mm) .. | 17 9 | First |
| | 76 | Satyaranjan Guha ... | 17 | Third |
| | 77 | Makhanlal Bhawal ... | 19 | First |
| | 78 | Nagendranath Chanda | 16-7 | Second |
| | 80 | Satischandra Pal ... | 16 10 | Second |
| | 81 | Chittaranjan Chakrabarti .. | 18 2 | Second |
| | 82 | Radhikamohan Das ... | 18 8 | Second |
| | | **Munshiganj H. E. School.** | | |
| | 84 | Anantanath Ray (ML ml) . | 18 1 | First |
| | 86 | Surendrachandra Saha | 17-10 | Second |
| | 87 | Banamali Sarkar (m) . | 16-4 | Second. |
| | 88 | Satyendraprasad Sen (Mm) ... | 18 1 | First |
| | 89 | Hariprasanna Sarkar | 18-10 | First |
| | 90 | Hiralal Sarkar . | 19 1 | Second |
| | 91 | Manindrachandra Sarkar ... | 21 8 | Second |
| | | **Sonarang High School.** | | |
| | 92 | Madhusudan Sutradhar ... | 18-1 | Third |
| | 93 | Bhupendralal Sengupta | 18-2 | First |
| | 95 | Gopalchandra Bandyopadhyay ... | 17 1 | Second |
| | 96 | Lakshminarayan Bandyopadhyay ... | 16-7 | Second. |
| | 97 | Karunakanta Bhaumik (m) ... | 16 6 | First. |
| | 98 | Pyarimohan Nath (m) | 18-1 | First. |
| | 99 | Prakaschandra Sil ... | 18-3 | First |
| | 101 | Harischandra Bhawal | 20-10 | Second |
| | 102 | Jadunath Gangopadhyay ... | 18 8 | Second |
| | 103 | Abdul Hoshen Bhuiya | 16-11 | Second |
| | | **Bajrayogini Jaykali High School.** | | |
| | 104 | Gopalchandra Datta | 17-7 | Second |
| | 105 | Bhupendrachandra De | 16 3 | First |
| | 106 | Hiralal Ghoshal ... | 19 1 | Second |
| | 108 | Tarinicharan Kunda ... | 20-2 | Third |
| | 109 | Gopinath Mantany ... | 17-5 | First |
| | 110 | Anathbandhu Sen .. | 16-8 | Second. |
| | 111 | Praphullachandra Mukhopadhyay (m) * | 17-1 | First |
| | 114 | Amulyacharandra De ... | 19 1 | Second |
| | 115 | Jatindranath Mukhopadhyay .. | 18-1 | Second |
| | 116 | Manasacharan Mukhopadhyay ... | 19-11 | Second |
| | 117 | Nazimuddin ... | 18-6 | Third |
| | 118 | Abdul Hakim ... | 16-10 | First. |
| | 119 | Abdul Aziz (M) ... | 18-9 | First. |

| Roll. | No. | Name. | Age | Division in which the candidate has passed |
|---|---|---|---|---|
| | | **Chanchartala Siddheswari A. G. Institution.** | | |
| Muns. | 120 | Bhupendrakumar Brahmachari (M) ... | 16-1 | First |
| | 121 | Paramachandra De ... | 18 2 | First |
| | 124 | Dhrubakisor De ... | 17 1 | First |
| | 125 | Dhirendralal Sen ... | 19-1 | Second |
| | 126 | Jogeschandra Datta (Mm) ... | 17-1 | First. |
| | 127 | Upendraprasad Ghosh (m) ... | 18-9 | First |
| | 128 | Sudhirchandra Sengupta ... | 20-2 | Second. |
| | 130 | Santoshchandra Bhattacharyya .. | 16 3 | Second |
| | 132 | Abdul Aziz Miah ... | 17-3 | Third. |
| | 133 | Hafezuddin Moral ... | 17-2 | Second. |
| | | **Munshiganj H. E. School.** | | |
| | 134 | Kalidas Bandyopadhyay (m) ... | 18-1 | First |
| | 135 | Syamlal Bhawal ... | 18 4 | Third |
| | 136 | Binaybhushan Das ... | 16-1 | Second |
| | *137 | Sureschandra Datta (MLml) ... | 16-6 | First. |
| | 138 | Mahananda Das ... | 18-8 | Second |
| | 139 | Nirmalkanta Ghosh (m) | 19 | First |
| | 140 | Brajmohan Gop .. | 21 8 | Second |
| | 141 | Hiralal Goswami ... | 17-3 | First |
| | 143 | Sudhirchandra Mukhopadhyay ... | 19 | Second. |
| | 144 | Thakurdas Namadas ... | 23 | Second |
| | 145 | Kalipada Chakrabarti | 20 | Second |
| | 146 | Jogeschandra Bandyopadhyay ... | 19-3 | Second |
| | 147 | Rameschandra Barari ... | 19-10 | First |
| | 148 | Hiralal Basak ... | 18 | First |
| | 149 | Binaykumar Basu ... | 18-7 | Second. |
| | 150 | Suhridchandra Basu ... | 19-7 | Second. |
| | 152 | Hiralal De ... | 20-7 | Second |
| | 153 | Dhirendranath Guha ... | 16-4 | Second |
| | 154 | Nripendrachandra Guha | 17 10 | First |
| | 155 | Binaybhushan Bal .. | 16-11 | Second |
| | 156 | Himansumohan Basu ... | 16-2 | Second |
| | 157 | Sureschandra Mukhopadhyay ... | 18-10 | Second |
| | 158 | Manindranath Bandyopadhyay ... | 22-4 | Second |
| | 159 | Rajendrachandra Barari | 19-8 | Second |
| | 160 | Satischandra Bhawal ... | 18-1 | Second |
| | 163 | Abdul Hares ... | 17-2 | First |
| | 164 | Abdus Samad Khan ... | 16-4 | Second |
| | 165 | Altabuddin Khan ... | 17 | First |
| | 166 | Gazi Ramizuddin ... | 17-1 | First |
| | 167 | Golamah ... | 21-7 | Third. |
| | 168 | Golam Mastaffa (m) ... | 16-2 | First |
| | 169 | Jamaluddin Ahamed (M) ... | 16-1 | First |
| | 170 | Jonabah ... | 16-1 | First |
| | 171 | Khalilar Rahaman ... | 19-6 | Second |
| | 172 | Monuruddin Bhuiah ... | 16-10 | Second |
| | 173 | Motahar Hossain (m) | 16-1 | First |
| | 174 | Abdul Jalil Khan ... | 21-11 | Second |
| | 176 | Altazaddin Ahamed ... | 16-2 | Second |
| | 178 | Azizur Rahaman ... | 21-4 | Second |
| | 183 | Ali Anwar Choudhury | 16-4 | Second |
| | | **Malkhanagar H. E. School.** | | |
| | 186 | Md Mobarakali Miah | 16-3 | First. |
| | 187 | Amritalal Gangopadhyay (MLml)* ... | 16-8 | First |
| | 188 | Sudhirchandra Chattopadhyay (Mm) ... | 16-9 | First. |
| | 189 | Jatindramohan Basuthakur ... | 17-5 | First. |
| | 190 | Herambacharan Chakrabarti ... | 16-7 | First |

| Roll. | No. | Name. | Age. | Division in which candidate has passed. |
|---|---|---|---|---|
| | | **Malkhanagar H. E. School.** | | |
| Muns. | 191 | Sachindramohan Mukhopadhyay ... | 20-1 | First. |
| | 192 | Madhusudan Pal (MLm) | 18-9 | First |
| | 193 | Jadunath Das (Mm) ... | 17-1 | First. |
| | 194 | Chittaranjan Haoldar | 17-1 | First. |
| | 195 | Phambhushan Rakshit (M) ... | 16-2 | First |
| | 196 | Pranballabh De (m) ... | 20-2 | First. |
| | 197 | Chandramohan Nandi | 20-2 | Second |
| | 198 | Rasmohan Pal ... | 18-3 | First |
| | 199 | Makhanlal Sen ... | 16 5 | First |
| | 200 | Sudhansubhushan Basu | 17. | First. |
| | 201 | Kasinath Das ... | 17-5 | First. |
| | 202 | Narendrachandra Nandi (Mm) ... | 17-5 | First. |
| | 203 | Pareschandra Datta ... | 18-10 | Second. |
| | 204 | Suratchandra Sen (Mm) | 17 | First. |
| | 205 | Amritalal Pal . | 16-8 | First. |
| | 206 | Hemchandra Chanda ... | 17-11 | First |
| | 207 | Haridas Mukhopadhyay | 17-7 | Second |
| | 208 | Abanranjan Sengupta | 16-5 | First |
| | 209 | Gaurangachandra Nath | 18-1 | Second. |
| | 210 | Bhaminiranjan Sengupta .. | 19 | Second |
| | *211 | Sachindranath Chakrabarti (MLml) . | 16-1 | First. |
| | 212 | Debendrachandra Das | 17-6 | First |
| | 213 | Dhirendrakumar Chattopadhyay (m) | 16-4 | First |
| | 214 | Satyanban Mukhopadhyay (m) .. | 18-1 | First |
| | 215 | Suranjan Chakrabarti | 16 9 | First |
| | 216 | Asutosh Bandyopadhyay .. | 18 | Second |
| | 217 | Sudhirkumar Dechaudhuri .. | 16-6 | Second |
| | 218 | Sudhirnath Basu ... | 17-1 | Second |
| | 219 | Jagadischandra Chakrabarti ... | 16-4 | First |
| | 220 | Sureschandra Pal ... | 20-3 | First |
| | 221 | Nagendralal Pal ... | 18-4 | Second. |
| | 222 | Basiruddin Ahamed ... | 20 1 | Second |
| | 223 | Priyalal Gangopadhyay | 21 2 | Second. |
| | 224 | Binodballabh Goswami | 18-2 | Second |
| | | **Banari H. E. School.** | | |
| | 225 | Jitendramohan Bandyopadhyay ... | 17-2 | First |
| | 226 | Debendrachandra Datta (m) ... | 19-1 | Second |
| | 227 | Bhabendranath Dasgupta ... | 21-2 | Second |
| | 228 | Novelchandra Dasgupta ... | 19-1 | First. |
| | 229 | Pareschandra Datta ... | 18-1 | First |
| | 230 | Digendrachandra De ... | 17-6 | First |
| | 231 | Hemangamohan Gangopadhyay ... | 17-2 | First |
| | 232 | Dineschandra Mukhopadhyay (m) ... | 17-1 | First |
| | 233 | Pareschandra Majumdar (Mm) ... | 17-1 | First |
| | 234 | Binaybhushan Nandi | 19-1 | Second. |
| | 235 | Taranimohan Sen (m) | 20-1 | First. |
| | 236 | Girijaprasad Chakrabarti ... | 21-2 | First |
| | | **Sonarang High School.** | | |
| | 237 | Sukhamay Dasgupta ... | 16-11 | First. |
| | | **Swarnagram Radhanath H. E. School.** | | |
| | *238 | Krishnachandra Bandyopadhyay (MLml) | 16 | First. |
| | 239 | Sudhendu Bandyopadhyay (L) ... | 17 | First. |

| Roll. | No. | Name. | Age. | Division in which candidate has passed |
|---|---|---|---|---|
| | | **Svarnagram Radhanath H. E. School.** | | |
| Mum. | 240 | Atulkumar Chakrabarti | 17-10 | First |
| | 241 | Nirmalchandra Sen (MLm) ... | 16-6 | First |
| | 242 | Surendrachandra Saha | 19 | First |
| | 243 | Surendrachandra Gupta (Mm) ... | 17-10 | First |
| | 244 | Kalachand Bhadra ... | 16-6 | First |
| | 245 | Basantakumar Mukhopadhyay (MLm)° ... | 16-8 | First |
| | 246 | Jogeschandra Gupta ... | 19-10 | First |
| | 247 | Sailendrachandra Mukhopadhyay (Mm) | 16-6 | First |
| | 248 | Sachindrachandra Ghoshal (M) ... | 18-8 | First |
| | 249 | Rammohan Chakrabarti (Mm) . | 17-3 | First |
| | 250 | Jitendranath Bandyopadhyay | 21 | First |
| | 251 | Harijiban Chakrabarti | 17-1 | Second |
| | 252 | Kalipada Chakrabarti | 18-11 | Second. |
| | 253 | Sitansubhushan Sengupta . | 17-6 | Second |
| | 254 | Tarapada Mukhoti ... | 18 | First |
| | 255 | Harendrachandra De | 19 | Second |
| | 256 | Manmathanath Chattopadhyay (m) .. | 17 | First |
| | 257 | Subodhchandra Dasgupta (Mm) ... | 18 | First |
| | | **Arial Swarnamayee H. E. School.** | | |
| | 261 | Manik Sikdar ... | 18-2 | Third |
| | 262 | Khoda Baksha Miah . | 21-1 | Second |
| | 264 | Nityagopal Nag . | 17-1 | Third |
| | 265 | Jatindramohan Chanda .. | 18 11 | Second |
| | 266 | Radhikajiban Nath .. | 17 2 | Second |
| | 267 | Jadabchandra Sarkar | 20 2 | Third |
| | 268 | Charuchandra Mukhopadhyay ... | 18-2 | Second |
| | 269 | Harimohan Bandyopadhyay .. | 18 | Second |
| | 270 | Kshitischandra Bandyopadhyay ... | 19-1 | First |
| | 271 | Niranjan Dattagupta (Mm) ... | 16 10 | First |
| | 272 | Gobindachandra Mukhopadhyay (M) | 20 2 | First. |
| | 273 | Harendralal Sarkar .. | 24 | Second |
| | 274 | Narendrachandra Ghatak ... | 17-9 | Second |
| | 275 | Krishnachandra Mukhopadhyay (Mm) | 18-2 | First. |
| | 276 | Radhikaranjan Gangopadhyay ... | 16 9 | First |
| | 277 | Kasinath Bhattacharyya (M) . | 18 1 | First |
| | | **Kukutia Kamalakanta Institution.** | | |
| | 278 | Tinkari Bandyopadhyay ... | 17-1 | Second |
| | 279 | Syamakanta Chakrabarti .. | 19-10 | First |
| | 280 | Haranidhi Chaudhuri (M) ... | 17 1 | Second |
| | 281 | Sudhirchandra Das ... | 17-1 | Second |
| | 282 | Amarchandra Das .. | 18-1 | Second |
| | 283 | Debataprasanna Datta | 20-1 | Second |
| | 284 | Tripurakanta Gangopadhyay ... | 17-1 | Third. |
| | 285 | Rameschandra Ghosh | 21-1 | Second |
| | 287 | Nityagopal Mukhopadhyay ... | 18-5 | Second. |

| Roll | No. | Name. | Age | Division in which the candidate has passed |
|---|---|---|---|---|
| | | **Tollirbag K. M. D. M. Institution.** | | |
| Mum. | 292 | Guruprasanna Kundu | 16-8 | First. |
| | 293 | Adhirchandra Sinha (M) ... | 17-8 | First |
| | 294 | Sudhirkumar Sinha ... | 19-6 | Second |
| | 295 | Dhirendramohan Basu | 17-11 | First |
| | 296 | Phanindrakumar Basu-ray ... | 17-4 | Third |
| | 298 | Sukumar Basuraychaudhuri ... | 16 2 | First |
| | 299 | Nanigopal Chakrabarti | 16-11 | Second |
| | 300 | Jnanaranjan Nath ... | 17 6 | First. |
| | 301 | Gaurangachandra Sil | 17 10 | Second. |
| | 304 | Jahiruddin Munshi ... | 19-1 | Second |
| | 305 | Shirajuddin Miah ... | 22-3 | Second |
| | | **Abdullapur H. E. School.** | | |
| | 306 | Manomohan Bardhan (M) .. | 20-6 | First |
| | 307 | Sanandachandra Basak | 21-11 | Second |
| | 308 | Rameschandra Bhattasali ... | 16 6 | First. |
| | 309 | Nrisinhachandra Chakrabarti ... | 19-7 | First |
| | 310 | Surendralal Chakrabarti | 19 | Second |
| | 311 | Radhikajiban Chattopadhyay ... | 22-2 | Second |
| | 312 | Jogeschandra Das (Mm) ... | 16-4 | First |
| | 313 | Srihari Datta ... | 18-3 | First |
| | 314 | Lalitmohan De (m) .. | 18-4 | First |
| | 315 | Nrityagopal De ... | 19-7 | Second |
| | 316 | Santoshchandra De ... | 19 4 | Second |
| | 317 | Santoshlal De ... | 22 1 | First. |
| | 318 | Brajendrachandra Ghosh (m) ... | 17-11 | First. |
| | 319 | Panchanan Karmakar | 17-8 | First. |
| | 321 | Madhusudan Kundu (Mm) ... | 18-1 | First |
| | 322 | Manindralal Kundu (m) ... | 19-2 | First |
| | 323 | Jadulal Nath ... | 21-7 | First |
| | 324 | Prabhatchandra Nath | 20 | First |
| | 326 | Hiralal Rudra (M) ... | 18-3 | First. |
| | 327 | Jamunikanta Rudra ... | 16-1 | First |
| | 328 | Lalmohan Sil ... | 23-5 | First |
| | 330 | Harendrachandra Das | 18-1 | Second |
| | 332 | Anukulchandra Kundu | 16-10 | First. |
| | 333 | Jnanendralal Kundu ... | 16-7 | Second. |
| | 335 | Ahindralal Saha ... | 17-6 | Third |
| | 336 | Haralal Sil ... | 17-2 | First |
| | 338 | Muhammed Mustafa Khan ... | 19-2 | Third |
| | 339 | Ferdaus Bepary ... | 19-2 | Second |
| | | **Autshahi R. N. H. E. School.** | | |
| | 340 | Abdul Ali Mian ... | 19-7 | Second. |
| | 341 | Pranballabh Pal (m) .. | 17-11 | First |
| | 343 | Nityananda Mandal (m) ... | 17-2 | First |
| | 344 | Asutosh Chakrabarti | 18-3 | First. |
| | 345 | Gurudas Chakrabarti ... | 18-11 | First |
| | *346 | Susilchandra Sengupta (MLml) .. | 16 3 | First |
| | 347 | Sureschandra Datta ... | 18-11 | Second |
| | 348 | Kalidas Bandyopadhyaya ... | 17-2 | Second |
| | 349 | Santoshchandra Gop .. | 17 10 | Third |
| | 350 | Nilratan Mukhopadhyay ... | 16-1 | Second |
| | 351 | Rameschandra Datta | 18-11 | Second. |
| | 352 | Upendrachandra Kar | 18-2 | Second |
| | 353 | Haribar Chaudhuri (M) | 17-1 | First |
| | 354 | Kalipada Ghatak ... | 18-1 | First. |

| Roll. | No. | Name. | Age. | Division in which the candidate has passed. |
|---|---|---|---|---|
| | | **Autshahi R. N. H. E. School.** | | |
| Mums. | 355 | Nalinikumar Nag ... | 20 7 | Second. |
| | 356 | Santibhushan Sengupta | 17-1 | First |
| | 357 | Naliniranjan Barari ... | 16-1 | Third |
| | 358 | Madhusudan Bandyopadhyay ... | 17-7 | Second |
| | | **Palkpara Union Institution.** | | |
| | 359 | Jatindramohan Aich (m) ... | 19 1 | First |
| | 360 | Girindrakumar Chakrabarti ... | 18-11 | Second |
| | 361 | Hemchandra Chaudhuri | 21-5 | Second |
| | 363 | Dhirendrachandra Datta ... | 19 6 | First |
| | 364 | Bisweswar Maulik ... | 16-2 | Second |
| | 365 | Dwijendrakumar Chakrabarti ... | 18 | Second. |
| | 366 | Jnanendrakumar Chakrabarti ... | 17-6 | Second |
| | 367 | Santoshchandra Gangopadhyay .. | 22-6 | Second. |
| | 368 | Harendralal Guha ... | 18 4 | Second |
| | 369 | Manoranjan Mukhoti | 17-2 | Second. |
| | | **Kalma Lakshmikanta H. E. School.** | | |
| | 370 | Kafiluddin Ahmed ... | 18-2 | Second |
| | 371 | Kalipada Bandyopadhyay (M) ... | 16 | First |
| | 372 | Kshirodnath Bandyopadhyay ... | 21-2 | Second |
| | 373 | Krishnaprasanna Maulik | 17-4 | First. |
| | 374 | Hiralal Rayghatak (M) | 16 | First |
| | *375 | Nripendranath Bandyopadhyay (Mm) ... | 16-11 | First. |
| | *376 | Nepalchandra Chattopadhyay (Mm) ... | 16-2 | First. |
| | 377 | Amulyachandra Das ... | 18 | First. |
| | 378 | Sudhirchandra Dasgupta (Mm) ... | 17-6 | First |
| | 379 | Kisorimohan Manjhi (m) | 19-8 | First. |
| | 380 | Nabadwipchandra Manjhi (Mm) ... | 21-3 | First |
| | *381 | Dineschandra Mukhopadhyay (Mm) ... | 16 | First. |
| | 382 | Kalipada Mukhopadhyay ... | 21-1 | First. |
| | 383 | Sitanshubhushan Sengupta (Mm) ... | 16-1 | First |
| | 384 | Jagadischandra Bandyopadhyay ... | 18-2 | First |
| | 385 | Jogeschandra Bandyopadhyay (m) ... | 17-11 | First. |
| | 386 | Santoshchandra Das (Mm) ... | 16 | First |
| | 387 | Amulyaratan Dasgupta | 19-2 | First. |
| | 388 | Bibhutibhushan Mukhopadhyay ... | 18-1 | First |
| | 389 | Sudhirkumar Dasgupta | 22-10 | First |
| | 390 | Sunilkumar Basu ... | 20 | First |
| | 391 | Kshetranath Ghosh ... | 17-2 | First. |
| | | **Swarnagram Radhanath H. E. School.** | | |
| | 392 | Muzoffar Hossain ... | 17-7 | Second |
| | 393 | Mukundahari Sengupta | 16-6 | First. |
| | 394 | Murahmohan Bandyopadhyay ... | 19-1 | Second |
| | | **Sinodepur Ramkumar H. E. School.** | | |
| | 395 | Rohinikumar Bhattacharyya (Mm) ... | 18-4 | First |
| | 396 | Bidhubhushan Chattopadhyay (M) ... | 17-2 | First. |
| | 398 | Prataplal Pal ... | 17-6 | First |

| Roll. | No | Name. | Age. | Division in which the candidate has passed. |
|---|---|---|---|---|
| | | **Sinodepur Ramkumar H. E. School.** | | |
| Mums. | 399 | Narendrachandra Pal (Mm) ... | 16-2 | First |
| | 400 | Basantakumar Pal ... | 18-1 | First |
| | 402 | Manomohan Ray (M) ... | 19-9 | First |
| | 403 | Harendrachandra Saha | 17 9 | First. |
| | 404 | Jogendralal Saha ... | 16-1 | First |
| | 405 | Gopalchandra Basu (MH) ... | 17-1 | First |
| | 406 | Kalipada Chakrabarti | 22-1 | Second. |
| | 407 | Upendrachandra Datta | 21-8 | First |
| | 409 | Pranballabh Kunda ... | 18-1 | Second |
| | 412 | Md Nozibar Rohoman Khan ... | 19-9 | Second. |
| | | **Sonarang High School.** | | |
| | 415 | Satyendrakumar Chakrabarti ... | 16-1 | Second. |
| | | **Sekharnagar Rai Bahadur Srinath Institution.** | | |
| | 417 | Tamizuddin Ahmed ... | 18 5 | Second. |
| | 418 | Nasiruddin Ahamed ... | 21-11 | Second |
| | 419 | Md. Osman ... | 21-7 | Second |
| | 420 | Ramnarayan Barari (m) | 18-4 | First |
| | 421 | Jatindrakumar Das ... | 16-2 | Second |
| | 422 | Mrinalkanti Sarkar ... | 17-1 | Second. |
| | | **Beltali Gangaprasad-Jagannath H. E. School.** | | |
| | 425 | Sudhirkumar Ghatak ... | 17-8 | Second. |
| | 427 | Dhirendrakrishna Pal | 20-6 | Second |
| | 429 | Sailendramohan Sinha | 16-4 | Second |
| | 430 | Labanyamohan Talukdar ... ... | 20-1 | Second |
| | 431 | Abdulaziz Miah ... | 2'-9 | Second. |
| | 432 | Hossainali Laskar ... | 20-3 | Second |
| | 435 | Debendrachandra Bhowal ... | 18-5 | Third. |
| | 436 | Matilal Chattopadhyay (Mm) ... | 16-4 | First |
| | 437 | Gobindachandra Datta | 19-3 | Third |
| | 439 | Narottamchandra Das | 19-6 | First |
| | 440 | Sudhirchandra Dasgupta ... | 17-1 | Second. |
| | 442 | Manohari De ... | 18-3 | Second |
| | 443 | Samiranchandra Gangopadhyay (Mm) ... | 18 | First. |
| | 444 | Sailendrachandra Ghatak (Mm) ... | 16-4 | First. |
| | 445 | Phanindrakanta Laskar | 20-1 | First |
| | 446 | Rakhalchandra Laskar (m) ... | 17-7 | Second. |
| | 448 | Kesablal Mukhopadhyay (Mm) ... | 17 | First. |
| | 449 | Debendrachandra Pal | 21-4 | Second. |
| | 450 | Rajanikanta Pal (m) ... | 19-1 | First. |
| | 452 | Haripada Talukdar (Mm) ... | 19-1 | First. |
| | 453 | Narendranath Bal ... | 17-1 | First |
| | 454 | Nepalchandra Ghosh (m) ... ... | 16-4 | First |
| | 455 | Jyotilal Mukhopadhyay | 17-3 | Third. |
| | 456 | Nirupam Bandyopadhyay ... ... | 17-2 | First |
| | 458 | Jitendrakumar Gangopadhyay ... | 18-4 | Second |
| | 459 | Aruneswar Ghoshal ... | 17-1 | First |
| | 460 | Munindranath Majumdar ... | 16-2 | Second. |
| | 461 | Bhupatimohan Mukhopadhyay ... | 21 | Second |
| | 462 | Prankumar Mukhopadhyay ... | 16-2 | First. |
| | 464 | Dhirendrachandra Bakshi | 22-1 | Third. |

| Roll. | No | Name. | Age. | Division in which the candidate has passed. |
|---|---|---|---|---|
| | | **Rajdia Abhaya H. E. School.** | | |
| Mums. | 465 | Manibhushan Gangopadhyay ... | 17-1 | Second. |
| | 466 | Santoshchandra Pal (M) | 16-2 | Second. |
| | 467 | Bhabaranjan Bandyopadhyay ... | 17-10 | First. |
| | 468 | Jatindralal Ray ... | 18 | Third |
| | 469 | Sudhirchandra Basu (M) | 16-5 | First. |
| | 470 | Abinaschandra Nath ... | 16-2 | Second. |
| | 471 | Sureschandra Bhattacharyya ... | 16 1 | Second. |
| | 472 | Dhirendrakumar Mukhopadhyay ... | 20-2 | Third |
| | 474 | Abdul Aziz Khan ... | 20-2 | Third |
| | 475 | Jnanendrachandra Nath | 20-3 | Second. |
| | | **Ichhapura H. E. School.** | | |
| | 476 | Mahendrachandra Chattopadhyay (Mm) ... | 16-6 | First |
| | 477 | Jamunikumar Nandi ... | 18-2 | First |
| | 478 | Amulyakumar Mukhopadhyay (Vm) ... | 17 3 | First. |
| | 479 | Debendrakumar Majumdar (m) ... | 18-2 | Second |
| | 480 | Kshiramohan Das (Mm) ... | 18-5 | First. |
| | 481 | Haramohan Datta ... | 20-4 | Second |
| | 482 | Jogeschandra Chattopadhyay (m) ... | 18-3 | First |
| | 483 | Rajkumar De ... | 18-2 | First |
| | 484 | Baikunthachandra Pal | 21-6 | Second. |
| | 485 | Kalipada Bandyopadhyay ... | 16 7 | First |
| | 486 | Nanigopal Bandyopadhyay ... | 21-3 | Second |
| | 487 | Herambachandra Bhattacharyya (H) ... | 17-2 | First. |
| | 488 | Sitanath Das ... | 18-8 | First |
| | 489 | Dhirendrakumar Pal ... | 16-5 | First |
| | 490 | Kamakhyacharan Chakrabarti ... | 20-1 | First |
| | 491 | Paresnath Bandyopadhyay ... | 16 | Second |
| | 493 | Rameschandra Pal ... | 19-5 | First |
| | 494 | Ushanath Chakrabarti | 18 | Second |
| | 495 | Pabitrakumar Bandyopadhyay ... | 19-10 | First |
| | 496 | Haridas Gangopadhyay | 19-8 | Second |
| | 497 | Kedarnath Chattopadhyay ... | 16-1 | First. |
| | 498 | Sureschandra Das ... | 18-4 | First |
| | 500 | Sachindranath Chakrabarti .. | 16-11 | Second |
| | 501 | Manmathanath Bandyopadhyay ... | 19-4 | Second |
| | 502 | Nagendrachandra Nandi | 18-8 | First. |
| | 503 | Nityananda Goswami | 20 | Third |
| | 504 | Sitanath Sil ... | 20-2 | Second. |
| | 505 | Jadabchandra De ... | 19 | Third |
| | 506 | Satischandra Das ... | 17-7 | Third |
| | 507 | Narayanchandra Bandyopadhyay ... | 18-10 | Second. |
| | 508 | Nanigopal De ... | 16-5 | Second. |
| | 510 | Reazuddin Bhuya ... | 18 | Third. |
| | 513 | Amjadali Howlader ... | 19-2 | Second |
| | 514 | Mohamed Abdul Khaleque ... | 19-10 | Third. |
| | 516 | Kalipada Chattopadhyay (m) ... | 16-5 | First. |
| | 517 | Sureschandra Khasnabis (Mm)* ... | 17-1 | First. |
| | 518 | Sarbamohan Mukhopadhyay (Mm) ... | 16-7 | First |
| | 519 | Haripada Chattopadhyay (Mm) ... | 18-6 | First |

| Roll. | No. | Name. | Age. | Division in which the candidate has passed. |
|---|---|---|---|---|
| | | **Kaliganj R. R. N. H. E. School.** | | |
| Mums. | 520 | Jibandhan Mukhopadhyay ... | 16-5 | First |
| | 521 | Manoranjan Sen ... | 17-1 | Second |
| | | **Kaliganj R. R. N. H. E. School.** | | |
| | 522 | Md. Jalaluddin ... | 17 | Second. |
| | | **Private Students.** | | |
| Mums. P. | 1 | Birendrakumar Ghosh | 17-6 | First |
| | 3 | Rameschandra Sarkar | 18 | First |
| | 4 | Sisirkumar Bandyopadhyay (m) ... | 19-2 | First |
| | 6 | Girijamohan Basu ... | 16-2 | First. |
| | 7 | Milanmohan Bandyopadhyay ... | 16-9 | First. |
| | 8 | Phanibhushan Chakrabarti ... | 17-2 | Second |
| | 9 | Rakhalchandra Desarkar | 18 | Second |
| | 10 | Saratchandra Gop (M) | 17-1 | First. |
| | 12 | Kiranchandra Das (M) | 16-1 | First |
| | | **Gauripur Rajendrakisor High School.** | | |
| Mym. | 1 | Daniel Henry ... | 18-5 | First |
| | 2 | Surendraprasad Acharyya ... | 19-2 | Second |
| | 3 | Kshitischandra Bhattacharyya (Mm) .. | 16 | First |
| | 4 | Sudarsan Chakrabarti (Mm) .. | 18 | First. |
| | 5 | Satischandra Dhar (Mm) .. | 16-1 | First |
| | 6 | Dhirendrachandra Lahiri (Mml) ... | 16-11 | First |
| | 7 | Dobikanta Lahirichaudhuri (MLml)* .. | 16 4 | First |
| | 8 | Manoranjan Mukhopadhyay (m) ... | 17-5 | First |
| | 10 | Surendrachandra Sarkar (m) ... | 20-6 | First |
| | 11 | Krishnakumar Bhattacharyya ... | 18-8 | Second. |
| | 12 | Priyanath Chakrabarti | 18-1 | Third. |
| | 13 | Nirendrakumar Maitra | 18-2 | First. |
| | 14 | Subhransubhushan Ray | 17-1 | First. |
| | 15 | Brajendrakumar Raypramanik ... | 16-4 | First. |
| | 16 | Phanindranath Sanyal | 19-3 | Third. |
| | 18 | Mohammad Munsif (ml) | 17-3 | First. |
| | 19 | A K M D. Hasaine Ali ... | 18 1 | Second |
| | 23 | Muhammad Harmuzali | 19-8 | Third |
| | 24 | Md Jasimuddin ... | 16 7 | Third |
| | | **Mymensingh Zila School.** | | |
| | 27 | Purnachandra Sil ... | 20 | Second. |
| | 28 | Binodbihari Ray ... | 17-10 | Second |
| | 29 | Barendranath Ray (m) | 16-3 | Second |
| | 30 | Gobindachandra Gop (m) ... | 18-7 | First. |
| | 31 | Surathanath Bhattacharyya (MLm)* ... | 16 5 | First |
| | 32 | Adhirchandra Bhattacharyya ... | 17-8 | First. |
| | 33 | Bhupendranath Basuray ... | 16-8 | First. |
| | *34 | Munindrakumar Ukil (MLm) ... | 16-1 | First |
| | 35 | Hirendrachandra Ray (MmMo) .. | 16-1 | First |
| | 36 | Adhirnath Ray (M) .. | 19 8 | First |
| | 37 | Manmathakumar Majumdar .. | 17-10 | Second |
| | 38 | Satyendrakanta Lahiri (MLm) ... | 16-9 | First. |

| Roll. | No | Name. | Age. | Division in which the candidate has passed. |
|---|---|---|---|---|
| | | **Mymensingh Zila School.** | | |
| Mym. | *39 | Jogendrachandra Chakrabarti (MLMc) | 17-3 | First. |
| | 40 | Ramdas Raychaudhuri (MH) ... ... | 16 11 | First. |
| | 42 | Rajendrachandra Kar... | 17-11 | First |
| | 43 | Mukhlesur Rahman (Mm) ... ... | 17-7 | First. |
| | 44 | Md Mortuza Ali (m) ... | 18-5 | First |
| | 46 | S M Fazlul Huque Chowdhury (Mm) ... | 17-1 | First |
| | 47 | Ahmad Ali Miah (M)... | 19-1 | First |
| | 48 | Abdul Gofur Khan .. | 16-1 | Third |
| | 49 | Mirza Ali Ahmad ... | 16-1 | Second |
| | 50 | Golam Arham ... | 19-1 | Third |
| | 51 | Md Sadat Ali ... | 21-1 | Second |
| | | **Mymensingh, Mrityunjay School.** | | |
| | 53 | Kumudchandra Chakrabarti (MLm) ... | 16 | First |
| | *54 | Satindramohan Modak (MLm) ... | 17 | First |
| | *55 | Kuladaranjan Dasarkar (MLVml) ... | 16-7 | First |
| | 56 | Sudhiranjan Ray (Lm) | 17-2 | First |
| | 57 | Kumudchandra Desarkar (Mml) ... | 20-3 | First |
| | 58 | Sachindrakisor Datta .. | 16-4 | Second |
| | 59 | Hiralal Bhattacharyya (M) ... ... | 17 11 | First |
| | 60 | Kumudkanta Desarkar (Mm) ... ... | 20-11 | First |
| | 61 | Birendrakisor Ray ... | 19-1 | Second |
| | 64 | Amareschandra Ray ... | 16-10 | First |
| | 65 | Aswinikumar Saha ... | 17 | First |
| | 66 | Harendrachandra Bhattacharyya ... | 19-6 | Second |
| | 67 | Lalitchandra Bhattacharyya ... | 18-3 | First. |
| | 68 | Sasadhar Chakrabarti... | 18 1 | First |
| | 69 | Nikhilranjan Ray ... | 16-1 | Second |
| | 71 | Akhilchandra Bagchi... | 16 | Second. |
| | 74 | Nareschandra Rauth ... | 17 7 | Third |
| | 75 | Jogeschandra Chakrabarti (Mm) ... | 18-2 | First |
| | 76 | Nagendrachandra Senray (Mm) ... | 18-4 | First |
| | 77 | Lokeschandra Guharay (Mm) ... ... | 16 | First |
| | 78 | Sudhansukumar Ukil ... | 16-1 | First |
| | 79 | Saileschandra Sarkar ... | 17-1 | Second. |
| | 80 | Satyapriya Ray (M) ... | 16 | First |
| | 81 | Asaranjan Basu ... | 16 | Third |
| | 82 | Hirendranath Chakrabarti .. ... | 20-2 | Second |
| | 83 | Sachindranath Bhattacharyya ... | 18-1 | Second |
| | 84 | Sureschandra Desarkar | 17-2 | Second |
| | 85 | Pabitrakumar Mitra ... | 16-9 | Second. |
| | 88 | Anantaprasanna Dasgupta ... .. | 18 11 | First. |
| | 89 | Kritantamohan Dasgupta ... ... | 17 5 | Second. |
| | 91 | Amulyajiban Sarkar ... | 16-2 | Second |
| | 92 | Sakhicharan Saha ... | 24-7 | Third. |
| | 93 | Upendranath Guha ... | 18-1 | Third |
| | 94 | Dharanikanta Guharay | 17 6 | Third |
| | 95 | Kazi Fazlul Karim (m) | 18 5 | First |
| | 96 | Rawshanah .. | 17-11 | First |
| | 97 | Imanali Ahmed ... | 20-2 | Second |
| | 98 | Md. Muazzem Hossain Khan ... | 19-1 | First. |
| | 99 | Golam Mokhdum ... | 21 | Third |
| | 101 | Md. Hossain Ali ... | 17-8 | Third. |
| | 104 | Sudhirchandra Guhathakurta ... | 18-4 | Third. |

| Roll. | No | Name | Age. | Division in which the candidate has passed |
|---|---|---|---|---|
| | | **Mymensingh, Mrityunjay School.** | | |
| Mym. | 105 | Satindramohan Ghosh | 19-7 | Third |
| | 106 | Sudhirchandra Ray ... | 16-1 | Second |
| | 109 | Syed Majibar Rahman | 17-1 | Third |
| | 112 | Md Abdul Karim ... | 16-8 | Third |
| | | **Kandipara Askarali H. E. School.** | | |
| | 123 | Mahammad Abdul Aziz | 21 3 | Second |
| | 124 | Mahammad Suleman ... | 19 | Third. |
| | | **Muktagacha R. K. H. E. School.** | | |
| | 131 | Sureschandra Bishnu (m) ... | 17;11 | First |
| | *132 | Girijakanta Chakrabarti (MLVm) ... | 16 5 | First |
| | 133 | Anadinath Sanyal (Mm) | 17-4 | First |
| | 134 | Sibchandra De ... | 20-1 | Second |
| | 135 | Hemantakisor Acharyyachaudhuri | 16-1 | Second |
| | 137 | Abanimohan Gun (m) | 16-1 | First |
| | 138 | Hirendranath Ray ... | 20 8 | First |
| | 139 | Nagendrachandra Datta (m) ... | 17-11 | First. |
| | 141 | Dhirendrachandra Chakrabarti ... | 16-7 | Second |
| | 142 | Bijaykumar Kundu (m) | 19-10 | First. |
| | 145 | Kshitischandra Datta | 18-1 | Second |
| | 147 | Nareschandra Mazumdar ... | 20 | Third |
| | 148 | Lal Mahmud Ahmed ... | 19-3 | Second |
| | 149 | Jahuri Lall Miah ... | 20-2 | Second |
| | 150 | Abdul Hye (Lm) ... | 16-4 | First |
| | 151 | Ahammadulla Miah (m) | 19-7 | First |
| | 153 | Basiruddin Ahamed ... | 18-1 | First |
| | | **Suti V. M. H. E. School.** | | |
| | 154 | Matilal Panik ... | 16-4 | First |
| | 157 | Paresnath Guha .. | 18-1 | Second |
| | 160 | Fayezuddin Ahamed ... | 21-7 | Second |
| | 163 | Md. Maslemuddin ... | 17-10 | Second |
| | | **Purbadhala J. M. H. E. School.** | | |
| | 166 | Dineschandra Bagchi | 16-7 | First. |
| | 167 | Manoranjan Bhattacharyya ... | 18-1 | First. |
| | 168 | Ramendrakanta Dhar | 17-2 | First |
| | 169 | Jyotischandra Joardar (Mm) ... | 16 10 | First. |
| | 170 | Harendrakisor Mazumdar (M) ... | 19-2 | First |
| | 171 | Nripendrakisor Ray ... | 16-11 | First |
| | 172 | Siteschandra Biswas ... | 16-5 | First. |
| | 173 | Satischandra Chakrabarti ... | 18 | Second |
| | 174 | Bhabatosh Joardar ... | 17 | Second |
| | 175 | Purnachandra Sinha ... | 18-1 | Third |
| | 178 | Musrabali Dewan ... | 19-3 | Second. |
| | | **Noapara H. E. School.** | | |
| | 179 | Satyamay Chakrabarti | 16-6 | First. |
| | 181 | Nikhilchandra Bhaumik ... | 16-1 | First |
| | 182 | Dhirendrachandra Ukil | 16-1 | Second. |
| | 186 | Sibananda Chakrabarti | 18 6 | Second |
| | 194 | Md Jahed Ali ... | 19-3 | Second. |
| | | **Chandipasa H. E. School.** | | |
| | 198 | Sureschandra Das ... | 18-1 | Second. |
| | 199 | Rajanikanta Pal ... | 17-8 | First |
| | 201 | Sureschandra Mali ... | 18-3 | Third. |
| | 205 | Md Abdul Hussain (Lm) ... | 18 1 | First |
| | 207 | Md Firuzali Bhuian ... | 18-5 | Second. |
| | 208 | Manindramohan Chaudhuri (m) ... | 16-2 | First. |

| Roll. | No. | Name. | Age. | Division in which the candidate has passed |
|---|---|---|---|---|
| | | **Chandrakona R. L. Institution.** | | |
| Mym. | 211 | Jitendrakisor Biswas | 16-2 | Second. |
| | 212 | Kaminikanta Chakrabarti .. | 18 1 | Second. |
| | 213 | Bhupendrakumar Biswas .. | 20 2 | Second |
| | | **Ghoshgaon Jatindra High School.** | | |
| | 214 | Syamacharan Bhaumik (Mm) . | 17-1 | First |
| | 215 | Nagendrakumar Datta (m) ... | 18-1 | First |
| | 216 | Ramsundar Datta ... | 20-6 | Second |
| | 217 | Bipinchandra De ... | 19-2 | Second |
| | 218 | Muhammad Abdul Aziz | 18 3 | First |
| | 219 | Mirza Mahammad Abdal Beg (L) ... | 17-11 | First |
| | | **Senbari V. M. Institution.** | | |
| | 220 | Harendrachandra De (m) . | 19 2 | First |
| | 221 | Satischandra Banik (m) | 20-3 | First |
| | 222 | Narendrachandra Banik | 19-4 | Second |
| | | **Mymensingh Mrityunjay School.** | | |
| | 229 | Narendraprasad Ghosh | 17-10 | Second |
| | 231 | Manindramohan Gupta | 21 3 | Second |
| | 232 | Jogeschandra Aich .. | 17 8 | Second |
| | | **Dhalla H. E. School.** | | |
| | 233 | Sureschandra Naha (m) | 18-1 | First |
| | 234 | Hridaynath Chakrabarti ... | 21-2 | Second |
| | 235 | Dinendranath Chakrabarti | 16 1 | Second |
| | 236 | Nagendrachandra Brahma . | 18-5 | First |
| | 237 | Jitendranath Bandyopadhyay (m) | 17-8 | First |
| | 238 | Birajmohan Datta .. | 19-7 | First |
| | 239 | Lakshmikanta Pandit | 18 6 | Second |
| | 240 | Bidhubhushan Chakrabarti ... | 18-6 | Second |
| | 241 | Jitendranath Ukil .. | 16-5 | Second |
| | 242 | Saroojprasun Ray ... | 18-2 | Second |
| | 244 | Manomohan Sinha .. | 18-4 | Second |
| | 245 | Rasmohan Saha ... | 17-4 | Second |
| | 246 | Aswinikumar Modak ... | 18-8 | Second. |
| | 247 | Susilkumar De . | 17-10 | Second |
| | 248 | Prankumar Chakrabarti (L) ... | 16 | First |
| | *249 | Umeschandra Basu ... | 16-3 | First |
| | 251 | Mahammad Ismail Hussain Mia ... | 18-1 | Second. |
| | 253 | Mahammad Abdul Gony .. | 17-10 | Third |
| | 255 | Muhammad Abdul Hai | 20-8 | Third |
| | 256 | Mahammad Imanullah Sikder ... | 18 3 | Third. |
| | 257 | Mahammad Hussain Ali. | 17-8 | First |
| | | **City Collegiate School, Mymensingh.** | | |
| | 258 | Md Shamsherali ... | 22-3 | Second |
| | 259 | Manmathanath Bhattacharyya ... | 20-6 | Third |
| | 262 | Srikrishna Dasarkar ... | 21-11 | Second |
| | 263 | Jogendrachandra Karmakar ... | 17-9 | Second. |
| | 264 | Bhrigukumar Guhathakurta (MLm) ... | 17-11 | First. |
| | 265 | Gobindalal Banik (L) | 16-1 | First |
| | 266 | Nripatimohan Sengupta (M) ... | 17 | First. |

| Roll. | No. | Name | Age. | Division in which the candidate has passed. |
|---|---|---|---|---|
| | | **City Collegiate School, Mymensingh.** | | |
| Mym. | 267 | Kshetramohan Chakrabarti (V) ... | 17-7 | First |
| | 268 | Sudhiranjan Sarkar . | 17-3 | First. |
| | 269 | Kshitiskumar Som (m) | 18-1 | First |
| | 270 | Nalinikanta Chakrabarti ... | 17-5 | First |
| | 271 | Khagendranath Chakrabarti ... | 16-3 | First. |
| | 272 | Jagadisprasanna Sengupta ... | 16 | Third |
| | 273 | Karunamdhan Kar ... | 17-3 | First |
| | 274 | Pritindranath Ray (m) | 16-2 | Second. |
| | 275 | Jogindramohan Ghosh | 16-7 | Second |
| | 276 | Labanyalal Ray ... | 18-1 | Third |
| | 277 | Mohinimohan Das ... | 23-1 | Second |
| | 278 | Akshayakumar Biswas | 17 3 | Second. |
| | 279 | Subodhchandra Bhaumik (m) ... | 16 | First. |
| | 280 | Arunangsubhushan De | 16 1 | First |
| | *281 | Amarendranath Ray (MLVm Mc) ... | 16-6 | First |
| | 282 | Phanindramohan Ray (Mm) ... | 17 2 | First. |
| | 283 | Sibendrakisor Chakrabarti (Mm) ... | 16 5 | First |
| | 284 | Jagadindubikas Goswami .. | 16-3 | First |
| | 285 | Ranendranath Chanda (Mm) ... | 16 3 | First |
| | 286 | Mrinalchandra Basu ... | 16-2 | First |
| | 287 | Kisinranjan Guha . | 16-1 | First |
| | 288 | Dwijendranath Basuray | 16-1 | First |
| | 289 | Manmathanath Sengupta (m) . | 17 6 | First |
| | 290 | Srimantaprasad Chakrabarti .. | 16-2 | First |
| | 291 | Saurindranarayan Majumdarchaudhuri | 16-2 | First |
| | 292 | Niramal Datta ... | 16-7 | Second |
| | 293 | Sudhirchandra Khasnabis . | 16-11 | Second |
| | 294 | Sureschandra Gangopadhyay .. | 17-8 | First |
| | 295 | Durgamohan Datta ... | 23-1 | Third. |
| | 298 | Narendraprasad Sen .. | 18-9 | Third |
| | 300 | Manimohan Sarkar ... | 16-9 | Third |
| | 302 | Sudhirchandra Gangopadhyay ... | 16-1 | Second. |
| | | **Hemnagar Sasimukhi H. E. School.** | | |
| | 306 | Birendrachandra Bhattacharyya ... | 17-1 | Second |
| | 307 | Abanikanta Bhaduri (M L) ... | 16 | First |
| | 309 | Rameschandra Chakrabarti ... | 16 | First |
| | 310 | Satiranjan Mukhopadhyay ... | 16-1 | First |
| | 311 | Purnachandra Datta (M) | 19-2 | First |
| | 313 | Debendrachandra Rakshit ... | 23 | Second |
| | 316 | Jitendranath Bhattacharyya ... | 20 4 | Second |
| | 336 | Sujatali Khan ... | 18-6 | First |
| | 337 | Md Aminur Rahaman Talukder ... | 18-1 | Third |
| | 339 | Shaikh Ahammed Ali | 19-6 | Second |
| | 342 | Sadequeali Miah ... | 18-3 | First |
| | | **Sherpur Town G. K. P. M. Institution.** | | |
| | *344 | Nalinikanta Chakrabarti (MLml) ... | 20 5 | First |
| | *345 | Sujitkumar Dasgupta (MLml) ... | 16 5 | First |
| | 346 | Kshitischandra Guha | 16 9 | First. |
| | 347 | Gurudas Kar ... | 16-1 | First |

| Roll. | No. | Name. | Age | Division in which the candidate has passed. |
|---|---|---|---|---|
| | | **Sherpur Town G. K. P. M. Institution.** | | |
| Mym. | 348 | Harendranath Bhattacharyya (m) ... | 19-3 | First |
| | 349 | Bimalchandra Nag . | 16 1 | First |
| | 350 | Nanigopal Dasgupta ... | 16 3 | First |
| | 355 | Dharanikanta De ... | 17 2 | Second |
| | 356 | Saileschandra Dattagupta ... | 18-8 | Second |
| | 357 | Harigopal Basak ... | 20-5 | Second |
| | 358 | Jadunath Misra ... | 18 11 | Second |
| | 360 | Dharanimohan Das ... | 19-2 | First |
| | 364 | Jagadischandra Ray ... | 16 6 | Second |
| | 465 | Sudhakantha Majumdar | 16-7 | Third |
| | 366 | Manindrakumar Sengupta ... | 17-9 | Second |
| | 367 | Nalinikanta Sengupta | 16-1 | Third |
| | 371 | Pramodkanta Das ... | 20-1 | Second. |
| | 372 | Nalinipraad Nag ... | 20-11 | Third. |
| | 373 | Manindranath Bhaumik ... | 19-3 | Second |
| | 374 | Harendrachandra Sinha | 20 | Second |
| | 375 | Rohatiprasad Das ... | 16-1 | First. |
| | 377 | Md Mainuddin Mia ... | 18-1 | First |
| | 379 | Shahedulla Ahemed ... | 19-5 | Third |
| | | **Gaila H. E. School.** | | |
| | 382 | Sudhansukumar Dasgupta ... | 16 7 | First. |
| | | **Ramgopalpur P. J. K. High School.** | | |
| | 383 | Hemchandra Chakrabarti .. | 19-2 | First |
| | 385 | Akshaykumar Chakrabarti ... | 19 1 | First |
| | 386 | Krishnadas Chakrabarti ... | 19 8 | Second |
| | 387 | Aswinikumar Sarmasarkar ... | 18-9 | First. |
| | 388 | Md Rajab Ali ... | 16-6 | Second |
| | 391 | Mohammed Abdul Gofur ... | 18-9 | Second |
| | | **Dhanbari Nawab Institution.** | | |
| | 392 | Dhirendrakisor Bishnu | 16-4 | Second |
| | 393 | Srigobinda Bhaumik ... | 16 5 | Third |
| | 394 | A K Md Sohahedur Rahaman Siddiqueyi | 19-2 | Second |
| | 397 | Sheikh Md Nurul Eslam ... | 19 2 | Second |
| | 398 | Md Badiar Rahman (L) ... | 16-3 | First |
| | 399 | Syedali Ahmed (Lm) ... | 18-2 | First |
| | 402 | Md. Nazir Hossain ... | 18 1 | Second |
| | 403 | Sheikh Abdul Aziz ... | 20-11 | Second. |
| | 405 | Mir Azahar Ali .. | 20-1 | Third |
| | 406 | Khondaker Md. Abdur Rashid (L) ... | 17-3 | First. |
| | | **Pingna H. E. School.** | | |
| | 407 | Rakhalchandra Desarkar (Mm) ... | 16 2 | First |
| | 408 | Raimohan Saha ... | 17-7 | First |
| | 410 | Rajendranath Ghatak | 18-7 | Second. |
| | 411 | Panchanan Malakar ... | 20-2 | First |
| | 412 | Asutosh Niyogi ... | 18 | First. |
| | 413 | Md Nazir Hossain (MLm) ... | 16-3 | First |
| | 414 | Md. Abdul Kareem ... | 18-2 | Second. |
| | 415 | Md. Abdur Rahaman | 19 8 | First. |
| | 416 | Sheikh Nazimuddin ... | 19 1 | First |
| | 417 | Abdur Rashid Janali ... | 17-4 | First |
| | 418 | Afsarali Ahamed ... | 17-4 | Second. |
| | 419 | Aftabuddin Miah ... | 21-10 | Third |
| | 420 | Md. Amir Ali ... | 24-2 | Third |

| Roll. | No | Name. | Age. | Division in which the candidate has passed |
|---|---|---|---|---|
| | | **Safargaon Islamia H. E. School.** | | |
| Mym. | 422 | Nareschandra Chaudburi ... | 17-8 | First |
| | 425 | Surendranath Sarkhel | 19-9 | First |
| | 426 | Umeschandra Das ... | 17-2 | Second. |
| | 428 | Dhirendrachandra Nandi | 17-10 | Third |
| | 431 | Md Abdul Hahm ... | 18-2 | Third |
| | 432 | Mahammad Amanulla | 18-1 | Second. |
| | 433 | Badrudduza ... | 16-2 | First |
| | 435 | Md Abdul Karim (m) | 17-11 | First |
| | | **Darirampur H. E. School.** | | |
| | 446 | A K. M. Ali Imam ... | 16-1 | Second |
| | 448 | Md Ahedullah ... | 18-2 | Second |
| | 449 | Md. Bahasuddin ... | 19 6 | Second |
| | | **Sherpur Victoria Academy.** | | |
| | 452 | Sachindrachandra Bhattacharyya ... | 18 3 | First |
| | 454 | Atulchandra Detapadar | 18-3 | First. |
| | 455 | Debendrachandra Chakrabarti ... | 19-1 | First |
| | 456 | Saratchandra Sil ... | 17-3 | Second |
| | 457 | Kiranchandra Debraj ... | 22-10 | Second |
| | 459 | Bijaykumar Karmakar | 18-2 | Third |
| | 460 | Hirendramohan Ray ... | 18 | First |
| | 463 | Narendrachandra Chakrabarti ... | 17-5 | First |
| | 464 | Subodhchandra Dasgupta ... | 20 1 | Third |
| | 465 | Sudhirkumar Ray ... | 17-1 | Second |
| | 469 | Dharanimohan Basu ... | 17-2 | Third |
| | 474 | Md Ismail ... | 17-4 | Second |
| | | **Choubari Islamia H. E. School.** | | |
| | 476 | Baluram Pal ... | 17-8 | Third |
| | 477 | Sasadharmohan Sil ... | 22 4 | Third |
| | 478 | Md. Bahadurali Akanda | 19-11 | Second. |
| | 479 | Md Abdul Hamid ... | 19-3 | Second |
| | 481 | Md Nayebuddin ... | 18-3 | Second |
| | 482 | Hassenali Sirker ... | 17-3 | First. |
| | 483 | Abdul Wajed Miah .. | 18-1 | Second |
| | 484 | Md Mayenuddin Sircar | 16-6 | Second |
| | | **Mymensingh Edward Institution.** | | |
| | *491 | Jyotischandra Majumdar (MLm) ... | 16-7 | First. |
| | 492 | Sitanath Goswami (MLm) ... | 16-9 | First. |
| | 493 | Ramsaday Bhattacharyya ... | 16-1 | First |
| | 494 | Ramhriday Bhattacharyya ... | 17-1 | First |
| | 495 | Ramsami Chaudhuri (m) | 17-8 | First |
| | 496 | Amritalal Sengupta ... | 17-3 | First. |
| | 497 | Ramdayal Nathsarkar | 16-8 | Second. |
| | 498 | Debendrachandra Bhushn ... | 19 | Second. |
| | 499 | Nirendramohan Ghosh (m) ... | 20 | First. |
| | 500 | Mukundalal Sen (Mm) | 18-4 | First. |
| | 501 | Girindrachandra Brahma ... | 16-2 | Second. |
| | 503 | Jogeschandra Chakrabarti ... | 20-3 | Second. |
| | 504 | Priyanath Bhattacharyya ... | 17-1 | Second |
| | 505 | Karunabandhu Hor ... | 16-1 | Second. |
| | 506 | Jogendramohan Chaudhuri ... | 17-3 | Second |
| | 507 | Anandananda Bhattacharyya ... | 22 11 | Second |
| | 508 | Priyanath De ... | 19-2 | Third |
| | 510 | Akshaykumar Saha ... | 16-3 | Second. |
| | 511 | Debendrachandra Pal | 22-3 | Third. |

| Roll. | No. | Name | Age | Division in which the candidate has passed. |
|---|---|---|---|---|
| | | **Mymensingh Edward Institution.** | | |
| Mym. | 512 | Jagadischandra Ray ... | 16 | Second |
| | 513 | Kartikchandra Saha ... | 17-7 | Second |
| | 514 | Sachindrachandra Nag | 17-4 | Second |
| | 517 | Nripendrakumar Sen | 19 9 | Second |
| | 518 | Abanikanta Talukdar | 16 | Second. |
| | 519 | Debendramohan Biswas | 17-1 | Second |
| | 521 | Pareschandra Sen . | 17-2 | Second |
| | 522 | Pramathachandra Bhattacharyya ... | 17 10 | Third |
| | 523 | Sudhirchandra Chakrabarti ... | 17 1 | Third |
| | 524 | Sachindramohan Ghosh | 17-2 | Third |
| | 525 | Sudhirkumar Haoladar | 18-7 | Third |
| | | **Achmita George Institution.** | | |
| | 526 | Mahammed Serajul Huque ... | 16 3 | First. |
| | 527 | Aswinikumar Banik ... | 18-1 | First |
| | 528 | Sachindramohan Biswas ... | 16-7 | First |
| | 530 | Jatindrachandra Bhaumik .. | 17-4 | Second |
| | 532 | Rameschandra Chakrabarti ... | 17-1 | Second |
| | 533 | Gopalchandra Datta ... | 21-8 | Second |
| | 535 | Upendrachandra De (m) | 16-8 | First |
| | 536 | Umeschandra Saha ... | 18 6 | Second |
| | 538 | Surendramohan Saha | 21 | Second |
| | 539 | Bankimchandra Bhattacharyya (L) ... | 16 | First |
| | 540 | Haripada Bhattacharyya ... | 18 | Second |
| | 541 | Hirendranath Bhattacharyya ... | 20-3 | Third |
| | 542 | Manoranjan Chakrabarti | 16-1 | Second |
| | 544 | Satischandra Acharyya | 20-2 | Second |
| | 546 | Birendrachandra Lahiri | 19 9 | Second |
| | | **Chaparkona Maheschandra Institution.** | | |
| | 547 | Narendranath Ray . | 16 2 | First |
| | 548 | Sasankasekhar Ray (m) | 19 1 | First |
| | 549 | Dinabandhu Raychaudhuri ... | 16 7 | Third |
| | 551 | Adharchandra Sil ... | 18-5 | Second |
| | 553 | Bhupendranath Pal ... | 18-4 | Second. |
| | 554 | Belayet Hossain Miah | 16-6 | Second. |
| | 556 | Abdur Rub Khan .. | 16-1 | First. |
| | | **City Collegiate School, Mymensingh.** | | |
| | 557 | Bhupendranath Ray .. | 17-1 | Second. |
| | 564 | Dhirendranath Sengupta ... | 18-8 | Third |
| | | **Mymensingh Edward Institution.** | | |
| | 565 | Md. Masiruddin ... | 19-4 | Second |
| | | **Ashujia J. N. C. Institution.** | | |
| | 567 | Nagendrachandra Ghosh ... | 18-5 | First |
| | 568 | Dinabandhu Chakrabarti ... | 17-2 | Second |
| | 571 | Jnanendramohan Das | 20-1 | Third |
| | 574 | Pramodranjan Majumdar | 20-7 | Third |
| | 575 | Dakshinaranjan Bhattacharyya ... | 19-9 | Second |
| | 577 | Aswinikumar Bhattacharyya ... | 22-3 | First |
| | 580 | Md. Asgarali Khan ... | 18-2 | Second |
| | 581 | Md. Ismail ... | 20 9 | Second. |
| | 582 | Md. Abdul Goni ... | 18 9 | Second |
| | 584 | Md. Abbasali ... | 22-2 | Third. |

| Roll | No | Name. | Age. | Division in which the candidate has passed |
|---|---|---|---|---|
| | | **Jatia H. E. School.** | | |
| Mym. | 586 | Jogendrachandra Bhaumik ... | 16-6 | Second |
| | 588 | Subodhchandra Ray ... | 16-2 | Third. |
| | 589 | Md Arajali ... | 17-2 | Second |
| | 590 | Nalendrachandra Ray | 17 | Second |
| | 591 | Surendrachandra Das | 16 | Third |
| | 594 | Mahmmad Mobarak Ali ... | 17 | Second |
| | 595 | Mahammad Abdul Khaleque ... | 23 | Second |
| | 596 | Mahammed Jubed Ali | 17 | Second |
| | 599 | Kazi Azemuddin Ahmed ... | 17 | First |
| | 601 | Raisuddin Ahamed ... | 18-2 | Second |
| | | **City Collegiate School, Mymensingh.** | | |
| | 606 | Harendrakisor Pal ... | 19-4 | Second |
| | 607 | Pramodkumar Chakrabarti ... | 16 5 | Second |
| | 609 | Dineschandra Das ... | 20-11 | Second |
| | 610 | Girijaprasad Bal ... | 19-1 | Third |
| | | **Jamirta H. E. School.** | | |
| | 612 | Rajendralal Bhadra ... | 16 4 | First |
| | 613 | Amulyachandra Das ... | 19-1 | Second |
| | 614 | Makhanlal Sarkar ... | 20-3 | Third |
| | 615 | Pareschandra Lahiri ... | 16-2 | Third |
| | 616 | Jibendrakumar Bagchi | 16-4 | First. |
| | 617 | Nagendrakanta Sarkar | 16-10 | Second |
| | 618 | Anadicharan Gun ... | 17-1 | Second |
| | 619 | Bireswar Bagchi ... | 16 | First |
| | 620 | Manikchandra Saha ... | 17-1 | Second |
| | 621 | Amarendranath Bagchi | 16 | Second |
| | 622 | Saileschandra Bagchi | 17 3 | Second |
| | 623 | Sudhansukamal Sanyal | 17-6 | Third |
| | 624 | Dwijendranath Datta | 18-1 | Second |
| | 625 | Md Moslemuddin Ahammed ... | 17-2 | Second |
| | 626 | Md Abul Fazal Miah | 20-7 | Third |
| | 627 | Md Entasali Pramanik | 16-1 | Third |
| | | **Susang Maharaja K. C. M. High School.** | | |
| | 628 | Haridas Goswami ... | 19-1 | First |
| | 629 | Mohinimohan Bhattacharyya ... | 16-9 | First |
| | 630 | Sudhindrachandra Bagchi ... | 19 4 | First |
| | 631 | Jagatchandra De (m) | 19-3 | First. |
| | 632 | Rameschandra Saha ... | 19-1 | Second |
| | | **Sherpur Victoria Academy.** | | |
| | 634 | Manindranath Sengupta | 16-2 | First |
| | | **Hailakandi V. M. High School.** | | |
| | 638 | Gajendranath Bhaduri | 21-3 | Second |
| | | **Sherpur Victoria Academy.** | | |
| | 639 | Syed Abul Kasem ... | 22 | Third |
| | | **Asujia J. N. C. Institution.** | | |
| | 640 | Rasmohan Deray (m) | 17-4 | First |
| | | **Chittagong Govt. Moslem High School.** | | |
| | 641 | Syed Abul Hayat Mohd Afzal (M) ... | 17-3 | First |
| | | **Nara School, Calcutta.** | | |
| | 642 | Sudhindrachandra Ray (Mm Mc) ... | 16-2 | First |

| Roll. | No. | Name. | Age. | Division in which the candidate has passed |
|---|---|---|---|---|
| | | **Vidyamoyee High School for Girls, Mymensingh.** | | |
| Mym. F. | 1 | Ambalika Dasgupta ... | ... | First |
| | 2 | Hiranprabha Dasgupta (L) ... | .. | First |
| | 3 | Hemnalini Debi .. | ... | First |
| | 4 | Aruna Nag (I) ... | ... | First |
| | 5 | Kamalbala Sarkar ... | ... | First |
| | 6 | Sucharubala Sarkar (M) | ... | First |
| | 7 | Mrinalini Sarkar ... | ... | Second |
| | | **Private Students.** | | |
| Mym. P. | 1 | Niradchandra Bhattacharyya ... | 17 4 | First |
| | 2 | Satischandra De ... | 18 | Third |
| | 3 | Kasimuddin Fokir ... | 17 | Second |
| | 4 | Nalinikanta Chakrabarti (Mm) ... | 18 5 | First |
| | 5 | Jayantakumar Ghosh | 17.5 | Third |
| | 6 | Arunoday Chakrabarti | 21-1 | Third. |
| | | **Teachers.** | | |
| Mym. T. | 2 | Md Maniruddin ... | 38 1 | Second |
| | 3 | Chandrakumar Bhattacharyya ... | 27 6 | Second |
| | | **Mirpur Sidhanta H. E. School.** | | |
| Nar. | 1 | Praphullachandra Chanda (m) ... | 18-6 | First |
| | 2 | Indubhushan Chattopadhyay (M) ... | 16-9 | First |
| | 3 | Praphullakumar Chaudhuri (M) ... | 17-5 | First |
| | 4 | Kamakhyaprasad Ghosh ... | 16 6 | First |
| | | **Sabhar A. C. H. E. School.** | | |
| | 6 | Nrityadacharan Datta | 17 10 | Second |
| | 7 | Bilaschandra Karmakar | 18-7 | Second |
| | 8 | Ramanimohan Ray | 23-8 | Second |
| | 9 | Lakshminarayan Saha | 22-2 | Second |
| | 10 | Jugalchandra Saha ... | 19-2 | First |
| | 11 | Rajendramohan Saharay ... | 18-8 | First. |
| | 12 | Abdul Aziz ... | 18 2 | First |
| | | **Baradi H. E. School.** | | |
| | 14 | Dwijendrachandra Das (M) ... | 16-3 | First |
| | 16 | Himansusekhar Aich | 16-1 | First |
| | 19 | Nalinikanta Basu ... | 18-7 | Second |
| | 27 | Rajendrachandra Saha (Mm) ... | 20-1 | First |
| | 28 | Pabitrakumar De ... | 16-2 | First |
| | 31 | Kshitischandra De ... | 16-2 | Second |
| | 33 | Surendrachandra De ... | 19 1 | Second |
| | 36 | Dhirendrachandra Saha | 19-1 | First |
| | 37 | Lokendrakanta Pain ... | 16-2 | First |
| | 38 | Praphullakumar Ghosh | 19-9 | First |
| | 39 | Rajabali Mollah ... | 21-2 | Third |
| | 40 | Abdul Karim Miah ... | 19-8 | Second |
| | 41 | Ramjuddin Bhuiya ... | 16-3 | Second |
| | 43 | Taleb Hossain ... | 16 2 | Second |
| | | **Nagari St. Nicholas Institution.** | | |
| | 44 | Baukimbihari Das (m) | 17-7 | Second |
| | 45 | Kshetramohan Banik (Vm) ... | 18 9 | First. |
| | 46 | Sudhirchandra Chakrabarti (m) .. | 18-8 | First |
| | 47 | Peninadhab Chaudhuri (M) ... | 17-5 | First |
| | 48 | Brajendrachandra Basu | 22-11 | Second |
| | 49 | Surendrachandra Banik | 16-11 | Second |
| | 50 | Hiralal De ... | 16-1 | Second |
| | 51 | Ramendrachandra Chakrabarti ... | 18-4 | Second |
| | 52 | Amiyaranjan Ghosh ... | 16-2 | Second |
| | 56 | Abdul Kaddus ... | 16-8 | First. |
| | | **Mathabhanga Bhairab H. E. School.** | | |
| Nar. | 57 | Bhupendrachandra Das | 16-8 | Third |
| | 58 | Pramodkumar Chakrabarti ... .. | 17-11 | Second |
| | 61 | Manomohan Chaudhuri | 17-9 | Second |
| | 62 | Sanatan Saha ... | 18-5 | Third |
| | 64 | Binodbihari Saha ... | 16-4 | Second |
| | 65 | Ayub Ali (M) ... | 17-2 | First |
| | 66 | Abdul Majid ... | 16-7 | Second |
| | 68 | Shamsul Haque (M) ... | 20-4 | First. |
| | 69 | Nayeb Ali ... | 21-11 | Second |
| | 70 | Chand Miah (Mm) ... | 17-3 | First. |
| | 73 | Mahammad Amanat Khan ... | 19-7 | First. |
| | 74 | Chunu Miah ... | 19-7 | Second |
| | | **Narayanganj H. E. School.** | | |
| | 75 | Devindernath Sabherwal (m) ... | 17 | First. |
| | 76 | Ramanimohan Saha | 18-1 | Second |
| | 77 | Nabadwipchandra Saha | 20 | Third |
| | 78 | Jaminimohan Saha ... | 19-11 | Second |
| | 79 | Ajitkumar Sengupta (Mm) ... ... | 16-8 | First |
| | 80 | Sudhanwachandra Rudra ... ... | 19-1 | Second |
| | 81 | Himansubhushan Ray chaudhuri (m) ... | 16 2 | First |
| | 82 | Nripendrakisor Pal (m) | 16-1 | Second |
| | 83 | Manindranath Mitra (Mm) ... ... | 16-1 | First |
| | 84 | Mohinimohan Mitra (Mm) ... ... | 16 7 | First. |
| | 85 | Upendrachandra Ghosh (Mm) ... ... | 17-10 | First. |
| | 86 | Sudhirchandra Ghosh (M) . ... | 18 | First |
| | 87 | Niharranjan Ghosh .. | 18 1 | Second. |
| | 88 | Jyotirindranath Ghosh (Mm) .. ... | 18-2 | First |
| | 89 | Ajitkumar Ghosh (Mm) | 16-10 | First. |
| | 90 | Hariprasanna Gangopadhyay (Mm) ... | 16-6 | First |
| | 91 | Monoranjan De ... | 21-3 | Second |
| | 92 | Jitendrakumar De (Mm) ... | 18-2 | First |
| | 93 | Sureschandra Datta ... | 17-9 | First |
| | 94 | Sachibhushan Datta (MVm) ... | 17-7 | First |
| | 95 | Manindrachandra Datta (M) ... | 18-5 | Second |
| | 96 | Indubhushan Datta ... | 18-5 | Second |
| | 97 | Dineschandra Datta (m) | 17-7 | First |
| | 98 | Nareschandra Datta (Mm) ... ... | 16 3 | First |
| | 99 | Lakshmikanta Chakrabarti (Mm) ... | 18-4 | First |
| | 100 | Amulyachandra Chakrabarti (Mm) ... | 18 | First |
| | 101 | Birendrachandra Chaudhuri ... | 17-1 | First |
| | 102 | Sisirkumar Basu ... | 17-4 | First |
| | 103 | Hrishikes Basak ... | 20-1 | Second |
| | 104 | Birendrachandra Bandyopadhyay (Mm) ... ... | 16-7 | First. |
| | 105 | Kshitindramohan Adhya (Mm) ... | 18 4 | First |
| | 106 | Sukhadaprasanna Som | 20-3 | First. |
| | 107 | Amarendranath Pal ... | 17-8 | Second. |
| | 108 | Pareschandra Ghosh (m) ... ... | 18 | First. |
| | 109 | Subodhchandra Das (m) | 17-4 | First |
| | 110 | Jyotirmay Chanda (Mm) ... ... | 16-1 | First. |
| | 111 | Prankrishna Raychaudhuri (Mm) ... | 16-4 | First. |

| Roll. | No. | Name. | Age. | Division in which the candidate has passed. |
|---|---|---|---|---|
| | | **Nawayangani H. E. School.** | | |
| Nar. | 112 | Ratiranjan Basak ... | 17-7 | Second |
| | 113 | Abanindra Bandyopadhyay ... | 19 2 | Second |
| | 114 | Debendranath Bandyopadhyay ... | 17-1 | First |
| | 115 | Jatindrachandra Sengupta ... ... | 20-6 | Second |
| | 116 | Priyanath Ray ... | 16-2 | First |
| | 117 | Radhasyam Pal ... | 16-2 | Second |
| | 118 | Pabitralal Mukhopadhyay ... | 18-5 | Third |
| | 119 | Sailendranath Guha ... | 18-5 | First. |
| | 121 | Makhanlal De ... | 16-11 | First |
| | 122 | Saratchandra Das (M) | 16-4 | First |
| | 123 | Narendrachandra Das | 17-1 | Second |
| | 124 | Nibarranjan Dattaray | 21-2 | Second |
| | 125 | Dhirendramohan Chakrabarti ... | 18-11 | Second |
| | 126 | Pankajkumar Basu ... | 16-11 | First |
| | 127 | Nareschandra Bandyopadhyay ... | 16 1 | First |
| | 128 | Bibhutimay Bandyopadhyay ... | 16-3 | First |
| | 129 | Santoshkumar Raychaudhuri ... | 17-2 | Second |
| | 130 | Haripada Ray (M) ... | 16-10 | First |
| | 131 | Ramendranath Nandi | 16-1 | Second |
| | 132 | Jatindramohan Mukhopadhyay ... | 19 4 | First |
| | 133 | Bishnupada Chattopadhyay ... | 17 6 | Second |
| | 134 | Jnanendrachandra Basu | 18 | Second |
| | 137 | Arabinda Chattopadhyay ... | 16-5 | Second |
| | 138 | Jaladharchandra Bandyopadhyay ... | 16-3 | First |
| | 139 | Muhammad Sekander Mian (M) ... | 16-3 | First |
| | 140 | Abdul Latiff ... | 19 11 | Second |
| | 141 | Syed Abdul Quader .. | 16 1 | First |
| | 142 | Syed Mohammed Mahmood ... | 19-1 | Second |
| | 143 | Fazlul Karim Dowan ... | 19 9 | Second |
| | 144 | Jalil Ahammed ... | 16-2 | Second |
| | 145 | Mahammad Kalimuddin Miah .. | 18 3 | Second |
| | 146 | Mohammed Zohurul Haque ... | 16-10 | First |
| | 147 | Mahbub Hossain Meah | 18 1 | Second. |
| | 148 | Sheik Ayatullah ... | 22 2 | Second |
| | 149 | Abul Bashirnural Huda | 19-6 | Second |
| | 152 | Budhubhushan Datta* (MVm) ... | 16 7 | First |
| | | **Balapur Nabinchandra H. E. School.** | | |
| | 193 | Sirajul Islam ... | 16-5 | First |
| | 194 | Abdul Maleque Bhuiyan (M) ... | 18-2 | First |
| | 195 | Baradakisor Chakrabarti (Mm) ... | 16-2 | First |
| | 196 | Prahladkumar Chakrabarti ... | 18-1 | First. |
| | 197 | Gokulbasi Sil (Mm) ... | 16-1 | First |
| | 198 | Birchandra Ray ... | 16-8 | Second. |
| | 199 | Narendrachandra Saha (M) ... | 19-5 | First |
| | 200 | Asutosh Ghosh ... | 16-1 | First |
| | 201 | Manindrachandra Majumdar ... | 19-5 | First. |
| | 202 | Jaladhar Bhuiya ... | 18-4 | First |
| | 203 | Atulchandra Saha (m) | 16-7 | First. |
| | 204 | Dhirendrachandra Das | 19-1 | Second |
| | 206 | Chandraprakas De ... | 17-8 | Second |
| | 207 | Pulinbihari Pal ... | 18-4 | First. |
| | 208 | Atulkumar Dhar ... | 17-1 | Second. |
| | | **Gaimpur Rahamania H. E. School.** | | |
| Nar. | 209 | Kalipada Debhaumik* (MLVm) ... | 17-1 | First. |
| | 210 | Nagendrabihari Bandyopadhyay (M) ... | 18 1 | First. |
| | 211 | Jagadischandra Das ... | 17-4 | Second |
| | 212 | Chandrakanta Debnath | 17-8 | Second. |
| | 213 | Nagendranath Chaudhuri ... | 17-7 | First |
| | 215 | Mahiuddin Khandoker | 21-1 | Second |
| | 216 | Matiar Rahman Khan (L) ... | 16-7 | First |
| | 217 | Md Alomali Bepari ... | 19-5 | Second |
| | | **Lakhpur Simulia H. E. School.** | | |
| | 218 | Nareschandra Sinha (Mm) . | 16-10 | First. |
| | 219 | Debendrachandra Sen (M) | 18 | First |
| | 220 | Bhupeschandra Ray ... | 17-3 | First |
| | 221 | Mahendrachandra Sil (M) ... | 16 9 | First |
| | 222 | Sureschandra Nag (M) | 17 1 | First. |
| | 223 | Narendrachandra Chakrabarti .. | 17 1 | First |
| | 224 | Narendrachandra Das (M) ... | 16-1 | First |
| | 225 | Rabindranath Ray (Mm) | 16 9 | First |
| | 226 | Gaurchandra Pal ... | 18 2 | First |
| | 227 | Surendrakumar Nag ... | 18 2 | First |
| | 228 | Pramodranjan Dasgupta ... | 17-8 | First |
| | 229 | Ramizuddin Khan .. | 16 2 | First |
| | 230 | Ashraf Ali .. | 16 4 | First |
| | 231 | Seraj Miah ... | 22-2 | First. |
| | | **Simulia S. P. H. E. School.** | | |
| | 232 | Pulinbihari Sarkar* (MVmd) .. | 17 1 | First. |
| | 233 | Saradindunath Sarkar (M) ... | 16-2 | First |
| | 234 | Sureschandra Karmakar | 16-2 | Second |
| | 235 | Saradaprasad Banik ... | 21-10 | Second. |
| | 237 | Pramathanath Nag ... | 18-1 | Second |
| | 238 | Binaykrishna Goswami (V) ... | 18-10 | Second |
| | 239 | Phanindrakumar Ray | 17-6 | Second. |
| | 240 | Kazimuddin Ahmed ... | 16-4 | Second. |
| | 241 | Mahamad Abdul Halim Khan ... | 21 | Second. |
| | 242 | Afsarali Khan ... | 22-3 | First |
| | 243 | Ickham Uddin Kazi ... | 20 8 | Second |
| | 244 | Safarali Ahmed ... | 18 | First. |
| | 245 | Choudhury Shamsuddin Hossain Siddiqui ... | 20 | Second. |
| | 247 | Momtaz Uddin Ahamed | 19-3 | Second |
| | | **Murapara Victoria H. E. School.** | | |
| | 248 | Jasodacharan Bandyopadhyay* (MVm) ... | 16-1 | First |
| | 249 | Sarojendramohan Malakar ... | 17-2 | First. |
| | 251 | Nripendramohan Bhattacharyya ... | 16-1 | First. |
| | 252 | Binaykumar Bhaumik | 17 10 | First. |
| | 253 | Brindabanchandra Gupta (Mm) ... | 16-10 | First. |
| | 254 | Jogendrachandra Das | 19 2 | Second |
| | 255 | Nityananda Pal ... | 18-1 | Second |
| | 256 | Kisorimohan Ray (m) | 18 3 | First |
| | 257 | Hirendrakumar Das (m) | 17-7 | First |
| | 258 | Bijaychandra Ray (Mm) | 18 1 | First |
| | 259 | Dhirendrachandra Das | 18 2 | First. |
| | 260 | Nalinbihari Nagbiswas | 17-1 | First. |
| | 261 | Nirmalchandra Kar (M) | 18-7 | First. |

| Roll. | No. | Name. | Age. | Division in which the candidate has passed |
|---|---|---|---|---|
| | | **Murapara Victoria H. E. School.** | | |
| Nar. | 262 | Jatindrachandra Chakrabarti .. | 17 1 | First |
| | 263 | Binaybhushan Bhattacharyya .. | 18 | First |
| | 264 | Aswinikumar Bhattacharyya ... | 20-10 | Second |
| | 265 | Sayed Boksha Kazee ... | 17-9 | Second |
| | 266 | Nur Baksha ... | 20-1 | Third |
| | 267 | Abbus Samad Khan ... | 19 1 | First |
| | 268 | Abdul Ghani ... | 18 | First |
| | 269 | Atchhah Miah ... | 21-6 | Second |
| | 270 | Abdul Halim Dewan ... | 19 | First |
| | | **Ujanchar K. N. H. E. School.** | | |
| | 322 | Rameschandra Bhattacharyya ... | 20-8 | Second |
| | 323 | Jogeschandra Bhadra | 21-2 | First |
| | 324 | Harendrachandra Das (m) ... | 20-2 | First |
| | 325 | Sanatan Das .. | 23 1 | First |
| | 326 | Manomohan Datta (M) | 18-3 | First. |
| | 327 | Nibaranchandra Debnath (MLm) ... | 16 3 | First |
| | 328 | Pulinbihari Pal (m) ... | 17-6 | First |
| | 329 | Haralal Ray (Mm) ... | 18 5 | First |
| | 330 | Abinaschandra Saha (Mm) ... | 19 4 | First |
| | 331 | Haradhan Saha (M) ... | 17-3 | First |
| | 332 | Kshitindramohan Saha (M) . | 16 | First |
| | 333 | Nabadwipchandra Saha | 16 6 | First |
| | 334 | Surendrachandra Saha (Mm) | 19 3 | First |
| | 335 | Ramanikanta Sarma ... | 18-6 | Second |
| | 336 | Lalmohan Das (M) .. | 18 4 | First |
| | 337 | Abdur Rahman ... | 16-3 | Second |
| | 338 | Abu Mohamed Abdus Sattar Chowdhuri ... | 16-3 | Second |
| | 339 | Md. Eanuse Miah .. | 20 | Second |
| | 340 | Abdul Awal ... | 16-8 | First |
| | 341 | Abdus Samad (m) ... | 17-1 | First |
| | 342 | Chand Mesh .. | 18-3 | First |
| | 343 | Raisuddin Ahmed ... | 18-10 | Second |
| | 344 | Sharafat Ali .. | 18-2 | First |
| | 345 | Tazammal Hossain (m) | 16-8 | First |
| | 346 | Yeakub Ali (MLm) .. | 17-2 | First |
| | | **Dhamrai Hardinge H. E. School.** | | |
| | 347 | Aswinikumar Das ... | 16-11 | Second |
| | 348 | Mahendrachandra Pal | 20-1 | Second |
| | 349 | Birendranarayan Sarkar | 18-1 | Second |
| | 350 | Manindranath Basak (m) ... | 16-1 | First |
| | 351 | Kshitindrakumar Guhamajumdar ... | 17-3 | Second |
| | 352 | Harekrishna Banik ... | 21-9 | Second |
| | 353 | Mohinimohan Goswami* (MLm) ... | 16-2 | First |
| | 354 | Sureschandra Pal ... | 16 | First |
| | 355 | Bijaybihari Basak ... | 17-10 | First |
| | 356 | Chittaranjan Mukhopadhyay ... | 17-6 | First |
| | 357 | Thakurdas Chandhuri (MLm) ... | 17-6 | First |
| | 358 | Jasodalal Basakhandi | 20-9 | First. |
| | 359 | Rameschandra Bhaumik ... | 18 6 | Second. |
| | 360 | Debendrachandra Basu | 20-1 | Third |
| | 362 | Kumudlal Majumdar ... | 16-2 | Second |
| | 363 | Nripendrachandra Pal | 19-5 | Second |
| | 364 | Matilal Majumdar ... | 18-6 | Third. |
| | 366 | Satischandra Sarkar ... | 20-3 | Third. |
| | 367 | Jatindramohan Deb ... | 18-1 | Second |
| | 368 | Pramathanath Sen ... | 20-8 | Second. |
| | 369 | Kedarnath Dekabiraj | 21 | Second. |

| Roll. | No. | Name. | Age. | Division in which the candidate has passed. |
|---|---|---|---|---|
| | | **Dhamrai Hardinge H. E. School.** | | |
| Nar. | 370 | Narendranarayan Sarkar ... | 16-1 | Second |
| | 371 | Sukumar Basu (M) ... | 17-6 | First. |
| | 372 | Debendranath Taraphdar ... | 20-1 | Second. |
| | 373 | Mahammad Ali ... | 18-4 | First. |
| | 374 | Razzakuddin Dewan (H) ... | 16-9 | First |
| | 375 | Jatior Rohman ... | 18 | Second. |
| | 376 | Asaruddin ... | 20-2 | Second. |
| | | **Taraganj Harendranarayan H. E. School.** | | |
| | 377 | Abdus Salam Khan ... | 16-11 | First |
| | 378 | Debendrachandra Das (M) ... | 20-7 | First |
| | 381 | Atulchandra Das ... | 18-2 | Second |
| | 382 | Ramanikanta Das ... | 18-6 | First |
| | 383 | Nandakumar Bhadra ... | 16 8 | Second |
| | 384 | Sureschandra Das* (MLm) ... | 16-8 | First |
| | 385 | Surendrachandra Karmakar ... | 19-2 | Second |
| | | **Rarikhal J. C. Bose Institution** | | |
| | 386 | Santoshkumar Basu ... | 17-1 | Second |
| | 387 | Priyanath Chakrabarti | 19 | Second |
| | 388 | Satyendranath Chaudhuri (Mm) ... | 18 10 | First. |
| | 389 | Prantosh Gop ... | 17-4 | Second |
| | 390 | Surendralal Gop ... | 18-2 | Third |
| | 391 | Himansuranjan Guha... | 17 1 | Second |
| | 393 | Bhupendrachandra Ghosh ... | 16-1 | First |
| | 394 | Kshitischandra Majumdar ... ... | 23-2 | Second. |
| | 395 | Aba Khaled Mahamed Abdur Rouch ... | 18-5 | Second |
| | 396 | Asutosh Ghosh ... | 17 | First |
| | 397 | Jasodajiban Ghosh (M) | 19-3 | First |
| | | **Sadasadi H. E. School.** | | |
| | 398 | Praphullachandra Das... | 16-8 | First |
| | 399 | Anukulchandra Das (Mm) ... | 17 | First |
| | 400 | Jogendrachandra Saha (m) ... | 19-4 | First. |
| | 401 | Rameschandra Das ... | 19 3 | First |
| | 402 | Upendrachandra Saha | 18-9 | First |
| | 403 | Sachchidananda Dasgupta ... | 17-4 | First |
| | 404 | Satyaranjan Saha (M)... | 17-7 | First. |
| | 405 | Pyarimohan Das ... | 19-4 | Second |
| | 406 | Kudrat Ali ... | 18-2 | Second |
| | 407 | Mohammad Solayman (M) ... | 16-10 | First |
| | 408 | Shahar Ali Miah ... | 20-1 | Second |
| | 409 | Amiruddin Bhuya ... | 22-6 | Second |
| | | **Kaliganj R. R. N. H. E. School.** | | |
| | 411 | Sibchandra Das ... | 17-2 | Second. |
| | 412 | Srischandra Kar ... | 17-3 | First |
| | 413 | Mohitlal Basu ... | 16-1 | Second. |
| | 418 | Md Sayedur Rahaman | 20-2 | Second. |
| | 420 | Bijendramohan Ghosh (m) ... | 17-4 | First. |
| | 421 | Anathbandhu Dhar ... | 21-1 | Second. |
| | 422 | Anukulchandra Bardhan | 18-6 | First |
| | 423 | Krishnadhan Saha ... | 19-7 | Second. |
| | 424 | Lalmohan Das ... | 16-8 | First. |
| | 425 | Pramathakumar Domajumdar ... | 20-7 | Second |
| | 426 | Abinaschandra Chakrabarti ... | 20-1 | Second. |
| | 428 | Bijaychandra Das ... | 17-3 | First. |

| Roll. | No. | Name. | Age | Division in which the candidate has passed. |
|---|---|---|---|---|
| | | **Kaliganj R. R. N. H. E. School.** | | |
| Nar. | 429 | Rajendrachandra Das ... | 20-2 | Third. |
| | 431 | Satischandra Das ... | 23 5 | Second |
| | 432 | Dhirendranath Ray ... | 18-1 | Second |
| | 433 | Binodbihari Saha ... | 18-10 | First |
| | 434 | Brajamohan Karmakar | 17-1 | Second |
| | 435 | Sukomalchandra Gupta | 17-1 | Second |
| | 436 | Abdul Gaffur Khan ... | 18 2 | First |
| | 437 | Mokhlas Uddin ... | 17-7 | First |
| | 438 | Masihuddin Ahmed ... | 20 3 | First |
| | 439 | Shafiqul Islam .. | 17 2 | Second |
| | 440 | Quazi Azizur Rohman... | 17 | First |
| | 445 | Eakub Ali, II ... | 19-3 | Second |
| | 446 | Anoweruddin Ahmed ... | 18-2 | Second |
| | | **Simulia Syamaprasad H. E. School.** | | |
| | 450 | Annadaprasad Saha ... | 18-5 | First |
| | | **Dhamrai Hardinge H. E. School.** | | |
| | 451 | Kisorimohan Banik (MLm) .. | 16-1 | First |
| | | **Kaliganj R. R. N. H. E. School.** | | |
| | 452 | Nisikanta Chakrabarti (m) ... | 17 10 | First |
| | | **Jaidebpur Rani Bhasmani High School.** | | |
| | 453 | Kshirodchandra Das ... | 16 | First |
| | 454 | Abinaschandra Baisya | 18-2 | First |
| | 455 | Kshetramohan Chakrabarti (Mm) .. | 20 11 | First |
| | 456 | Dhirendrachandra Chanda .. | 20-5 | Second |
| | 457 | Kshirodbandhu Ray .. | 21 | First |
| | 458 | Bharatchandra Saha ... | 17 6 | First |
| | | **Raipur R. K. R. M. Institution.** | | |
| | 459 | Sureschandra Chakrabarti ... | 17 2 | Second |
| | 460 | Abdul Karim . | 19-3 | Second |
| | 462 | Mazibar Rahman Miah | 19-5 | Second |
| | 463 | Mohammad Ali .. | 20 1 | Second |
| | 464 | Tayeb Uddin Ahmed | 17-10 | First |
| | | **Tegharia H. E. School.** | | |
| | 474 | Byomkes Sengupta (Lml) ... | 16-3 | First |
| | 475 | Barindrachandra Ray | 18 2 | First |
| | 476 | Girischandra Pal (m) ... | 18 1 | First |
| | 477 | Birendrakumar Desarkar ... | 17-1 | Second |
| | 478 | Makhanlal Chakrabarti | 16 4 | First |
| | | **Araihazar H. E. School.** | | |
| | 495 | Sachindrachandra De (Mm) . | 19 8 | First |
| | 496 | Pranmathakumar Ghosh ... | 18 | First |
| | 497 | Swarnakamal Chakrabarti ... | 21-1 | Second |
| | 498 | Birendrachandra Ghosh | 19-1 | First |
| | 499 | Jogeschandra Das ... | 16-8 | First |
| | 500 | Debendrachandra Biswas ... | 17-8 | First |
| | 501 | Dhirendrachandra Ray | 17-6 | Third |
| | 502 | Sailendrachandra Bhattacharyya ... | 17-1 | Second |
| | 503 | Kunjamohan Kar ... | 21-1 | Second |
| | 505 | Abdul Gafer Ahmed (m) ... | 17-2 | First. |
| | 506 | Abdumulla Khandakar | 17-11 | First. |
| | 507 | Mahammad Almas ... | 16-6 | First. |
| | 508 | Shamsuddin Khandkar | 16 1 | Second |

| Roll. | No | Name. | Age | Division in which the candidate has passed |
|---|---|---|---|---|
| | | **Sonakanda B. M. Union H. E. School.** | | |
| Nar. | 509 | Abanimohan Das, II ... | 16-2 | Second |
| | 510 | Chandrakisor Nandi ... | 19-4 | Second |
| | 512 | Sachindrachandra De (Mm) ... | 16 2 | First |
| | 513 | Pareschandra Debhaumik ... | 20 8 | First |
| | 514 | Anathbandhu Kunda | 16 4 | Second |
| | 515 | Abanimohan Das, I ... | 16-4 | First |
| | 516 | Satischandra Das ... | 16 3 | Second |
| | 517 | Gaurchandra Das (M) | 16-4 | First. |
| | 518 | Gajendrachandra Das | 16 2 | First |
| | 519 | Surendranath Sengupta (Mm) ... | 21 2 | First |
| | 520 | Kshitischandra Pal ... | 17-8 | First |
| | 521 | Birendrachandra Datta | 16 2 | Second. |
| | 524 | Shahajada ... | 21 | Third |
| | 525 | Mahamad Shamsul Hoque . | 18 2 | Second |
| | 526 | Mahammed Easin ... | 21 | Second |
| | 527 | Abdul Aziz, II ... | 20 6 | Second |
| | 528 | Abdul Aziz, I ... | 22 2 | First |
| | | **Satirpara K. K. Institution.** | | |
| | 529 | Jatindrabhusan Datta | 16 1 | First |
| | 533 | Sasimohan Pal ... | 19 | First |
| | 534 | Rabindrachandra Das (Mm) ... | 16 8 | First |
| | 535 | Nalinkanta Ray (Mm) | 17 | First. |
| | 536 | Upendrachandra Das . . | 20 8 | First |
| | 537 | Ramendrakumar Maulik | 16 4 | First |
| | 538 | Bhupendrachandra Das | 16-3 | First |
| | 541 | Sachindrakumar Acharya ... | 17 2 | Second |
| | 542 | Digendrakisor Dattaray | 19-7 | Second |
| | 543 | Manikchandra Chakrabarti ... | 22-6 | Second |
| | 547 | Abdul Mannan Khan | 16-5 | First |
| | 548 | Alfazuddin Ahamed ... | 17-4 | First |
| | 549 | Ashabuddin Bhuiah ... | 19 | Second |
| | 550 | Mahammed Jinnatali | 17 4 | Second. |
| | 552 | Abdul Awal ... | 25 | Second |
| | 554 | Manirudin Miah (Mm) | 20 4 | First |
| | 556 | Abdul Bari ... | 17-11 | First |
| | 557 | A H Ahasgar ... | 23-1 | Second. |
| | 558 | Md Faize Uddin Bhuia | 17 3 | Second |
| | | **Nawabganj H. E. School.** | | |
| | 559 | Phanibhusan Ray (Mm) | 16-8 | First |
| | 560 | Kshetramohan Karmakar (m) ... | 19-10 | First |
| | 561 | Munindrabhushan Chakrabarti ... | 16-8 | First. |
| | 562 | Chintaharan Saha ... | 18-1 | First. |
| | 563 | Rasikchandra Chakrabarti (m) ... | 17 11 | First |
| | 564 | Sasankabhushan Ray | 24-2 | First |
| | 565 | Manindranath Datta ... | 16-9 | First |
| | 566 | Haralal Saha (m) .. | 17-5 | First. |
| | 568 | Makhanlal Saha ... | 16 7 | Second |
| | 569 | Manindrachandra Saha | 17 1 | First |
| | 570 | Rajendrachandra Basu | 18 | Second |
| | | **Nawabganj H. E. School.** | | |
| | 571 | Srischandra Datta ... | 16-1 | Second |
| | 572 | Brajeswar De ... | 18 | Second |
| | 573 | Pakhilal Ray ... | 18-3 | First. |
| | 575 | Jatindranath Mitra ... | 19-6 | Second. |
| | 577 | Khondakar Mahbubazzaman ... | 18-7 | First. |
| | 579 | Mafzaluddin Ahmed ... | 17-3 | Second. |

| Roll | No. | Name. | Age. | Division in which the candidate had passed |
|---|---|---|---|---|
| | | **Bhagyakul Harendralal H. E. School.** | | |
| Mar. | 621 | Sarojkumar Bhattacharyya* (MLml) ... | 19 11 | First. |
| | 622 | Makhanlal Das (m) ... | 18 9 | First. |
| | 623 | Niranjan Ghosh (MLm) | 17-4 | First |
| | 624 | Jitendraprasad Ghosh (M) ... | 19-1 | First |
| | 625 | Sudhirkumar Rudra (M) | 18-10 | First |
| | 626 | Bibhutibhushan Bandyopadhyay (Mm) ... | 19-8 | First. |
| | 627 | Kanailal Gop ... | 20-10 | Second |
| | 628 | Amarchandra Kundu (Mm) ... | 17-3 | First |
| | 629 | Pabitrakumar Ray (Mm) ... | 17-6 | First |
| | 630 | Asutosh Thakur (m) ... | 16-3 | First |
| | 631 | Praphullachandra Das (Mm) ... | 18-3 | First |
| | 633 | Sasankamohan Kar (M) | 18 6 | First |
| | 634 | Nikhilchandra Pal (m) | 18-2 | First |
| | 635 | Taraknath Poddar (M) | 16-1 | First |
| | 636 | Sunilchandra Pal (m) | 16 | First |
| | 637 | Bhubanmohan Chakrabarti (m) ... | 16-5 | First |
| | 638 | Ramendrakumar Rudra | 18 10 | Second |
| | 639 | Jagatbandhu De (M) | 17-5 | First |
| | 640 | Satischandra Kundu | 17-8 | First |
| | 641 | Rainohan Das ... | 18-5 | First |
| | 642 | Dineschandra Basu (M) | 17 1 | First |
| | 643 | Nandalal Ray ... | 18-7 | Second |
| | 644 | Abambhushan Gop .. | 18-4 | Second |
| | 645 | Upendrachandra Bhattacharyya .. | 18 8 | First |
| | 647 | Praphullakumar Bandyopadhyay ... | 18-2 | Second |
| | 648 | Saratchandra Gop ... | 19-4 | Second |
| | 649 | Nripendranath Mukhopadhyay ... | 21 2 | Second |
| | 650 | Jitendrakumar Mitra | 20-6 | Second |
| | 651 | Jitendrakisor Ghosh | 16 10 | First |
| | 652 | Niharranjan Chaudhuri (M) ... | 17 7 | First |
| | 653 | Syamballabh Ray ... | 17-1 | First |
| | 654 | Satinath Mukhopadhyay ... | 19-1 | First |
| | 656 | Romizuddin Ahmed ... | 22-10 | Second |
| | 657 | Rehanuddin Ahmed (m) ... | 17-4 | Second |
| | 658 | Syed Ahamed Khan ... | 18-2 | Third |
| | 660 | Abdul Gani Miah ... | 16-1 | Second. |
| | | **Sajganw High School.** | | |
| | 661 | Abdul Aziz .. | 17 9 | First |
| | 662 | Abdul Mobarok (Mm)... | 16-8 | First. |
| | 663 | Rainohan Nath ... | 13-7 | First. |
| | 664 | Atulchandra Sengupta (M) ... | 16-10 | First. |
| | 666 | Amulyaratna Das ... | 16-7 | First |
| | 668 | Loknath Das ... | 19-2 | Second |
| | 669 | Sonajaddin Kazi ... | 16-8 | Third |
| | 670 | Mazaffar Ali ... | 19 | First |
| | | **Bhagyakul Harendralal H.E. School.** | | |
| | 671 | Manoranjan Ray ... | 17-11 | Second. |
| | | **Jaydebpur Rani Bilasmani High School.** | | |
| | 673 | Dhirendramohan Chakrabarti (m) ... | 18-7 | First |
| | 674 | Sobodhmohan Chakrabarti ... | 16-1 | First |
| | 675 | Sudhirmohan Chakrabarti (Mm) ... | 17-4 | First |

| Roll. | No. | Name. | Age. | Division in which the candidate has passed. |
|---|---|---|---|---|
| | | **Sonargaon G. R. Institution.** | | |
| Mar. | 678 | Hemantakumar Dassarkar (m) ... | 16-1 | First. |
| | 679 | Nirmalchandra Majumdar .. | 17.6 | First |
| | 680 | Upendrachandra De (Mm) ... | 23-7 | First. |
| | 681 | Baradakanta Karmakar | 17-3 | First. |
| | 682 | Kshitischandra De ... | 19-1 | First. |
| | 683 | Nagendrachandra De | 21-3 | First. |
| | 684 | Satyaranjan Sen ... | 19-9 | Second. |
| | 685 | Rohinikumar Bhattacharyya ... | 22-3 | Second. |
| | 686 | Rakhalchandra Saha ... | 20 | Second |
| | 687 | Surendrachandra Chakrabarti ... | 18-4 | First |
| | 688 | Dhirendrachandra Saha | 18-5 | First |
| | 689 | Surendrachandra Das | 18-1 | Second |
| | 690 | Sureschandra Datta ... | 21 | Second |
| | 691 | Satyaranjan Chaudhuri | 16-7 | First |
| | 692 | Binaybhushan Sen ... | 18-2 | First |
| | 693 | Phanindrachandra Das | 17-2 | Second |
| | 694 | Sachimohan Ray ... | 18-1 | Second. |
| | 696 | Bhagon Ali .. | 17-2 | Second. |
| | 697 | Affazaddin ... | 20-1 | Second |
| | 698 | Sultan Miah ... | 17-2 | First |
| | 699 | Abul Fazal Khan .. | 17-7 | Second |
| | | **Adiabad Islamia H. E. School.** | | |
| | 703 | Sibkisor Das ... | 22-4 | Second |
| | 704 | Upendrachandra Pal ... | 22-2 | Second |
| | 705 | Narendrachandra Das | 18-3 | Second |
| | 706 | Abdul Kader ... | 20-1 | Second |
| | 707 | Md Sekander Ali ... | 20-5 | Second |
| | 708 | Md Taiabali ... | 19-10 | First |
| | 709 | Momtazuddin Ahmed | 16-7 | First |
| | 710 | Abdul Hamid ... | 19-1 | First |
| | 711 | Abdur Razzaque (MLm) | 20-3 | First |
| | 712 | Ahmed Ali (m) ... | 16-5 | First |
| | 713 | Amir Hossain ... | 22-4 | Second |
| | | **Madhyapara Iswarchandra Institution.** | | |
| | 718 | Nahinnath Chakrabarti (Mm) ... | 17-5 | First |
| | 720 | Manindramohan Chakrabarti ... | 19-5 | Second |
| | 723 | Manindrachandra Mukhopadhyay ... | 18-8 | First. |
| | 724 | Amulyabhushan Sengupta ... | 20-2 | Second |
| | | **Kaliganj R. R. N. H. E. School.** | | |
| | 726 | Mahfujal Haque Khan | 17-9 | Second. |
| | 727 | Mahammad Rahmat Ullah (m) ... | 16-1 | First. |
| | 728 | Karamali Miah ... | 18-4 | Second |
| | | **Simulia S. P. H. E. School.** | | |
| | 730 | Sudhirchandra Bhandari ... | 16 | Second |
| | | **Shibpur H. E. School.** | | |
| | 731 | Abinaschandra Das ... | 18-11 | Second. |
| | 732 | Sudhishnunarayan Saha ... | 19 6 | Second. |
| | 733 | Sasibhusan Pal ... | 21-11 | Second. |
| | 735 | Tamasaranjan Das ... | 16-4 | Third. |
| | 737 | Saffiuddin Ahamad ... | 16-11 | Third |
| | 738 | Amzadali ... | 19-9 | Second. |
| | 739 | Mafizuddin Bhulah (M) | 16-8 | First. |
| | | **Lakhpur Simulia H. E. School.** | | |
| | 740 | Mahammad Idrisali ... | 20-10 | Third. |

| Roll. | No. | Name | Age. | Division in which the candidate has passed. |
|---|---|---|---|---|
| | | **Duptara Central Coronation School.** | | |
| Nar. | 741 | Abanikanta Biswas (m) | 19-4 | First. |
| | 743 | Sukeschandra Dasgupta | 17-5 | Second |
| | 744 | Rajendrachandra Dasray | 17-2 | First |
| | 745 | Narendrachandra Datta (Mm) | 16-8 | First. |
| | 746 | Sureschandra De (m) | 16-3 | First. |
| | 747 | Abanimohan Dhar | 16-4 | First. |
| | 748 | Rajeswar Dhar (Mm) | 16-2 | First |
| | 749 | Radhikamohan Pal (m) | 18-1 | First. |
| | 750 | Akshaykumar Pal | 17-11 | Second |
| | 751 | Pankajmohan Sen | 16-6 | Third |
| | 753 | Sharjuddin Ahamed | 18 | Second |
| | | **Sonakanda B. M. Union H. E. School.** | | |
| | 754 | Mohammad Abdul Ghani | 21 | Third |
| | | **Rarikhal Sir J.C. Bose Institution.** | | |
| | 756 | Priyanath Gangopadhya | 17-3 | First |
| | | **Narayanganj H. E. School.** | | |
| | 758 | Sudhischandra Ray | 17-4 | Second |
| | | **Murapara Victoria H. E. School.** | | |
| | 774 | Ramchandra Mandal | 21 | Second |
| | 775 | Narendrakumar Chanda | 22 1 | Third |
| | | **Private Students.** | | |
| Nar. P. | 1 | Susilkumar Datta | 16-6 | First |
| | 2 | Abdus Sobhan | 24 | First |
| | 3 | Nibaranchandra Das | 20 | First |
| | 4 | Satyendramohan Chakrabarti | 20 5 | First |
| | 5 | Karunakumar Acharyya | 22-10 | First |
| | | **Teacher.** | | |
| Nar. T. | 1 | Abdul Haque | P | |
| | | **Netrakona Dutt High School.** | | |
| Net. | 1 | Kalikanta Sarkar | 16-6 | Second |
| | 3 | Syamapada Ray (LV) | 17 6 | First |
| | 4 | Nandakumar Ray (MVm) | 17-5 | First. |
| | 5 | Phanindranath Majumdar* (MLVm) | 16-1 | First. |
| | 6 | Sailendramohan Kar (M) | 17-3 | First |
| | 7 | Dhirendrakisor Goswami* (MLm) | 19-1 | First |
| | 8 | Chittaranjan Bandyopadhyay (Mm) | 18 9 | First |
| | 9 | Nisikanta Karmakar | 18-1 | Second |
| | 10 | Manmohan Chakrabarti | 16-8 | Second |
| | 11 | Kalikumar Saha | 17-2 | Third. |
| | 13 | Sudhirchandra Majumdar, II | 16 | Second. |
| | 14 | Hassamuddin Khan | 23-2 | Second |
| | 15 | Syed Azizul Haque (m) | 16-4 | First. |
| | 16 | Nagendranath Biswas (MLm) | 16-4 | First. |
| | 17 | Binodlal Mukhopadhyay (MLm) | 16 | First. |
| | 18 | Nripendranarayan Ray | 16-5 | First |
| | 19 | Rebatisankar Baisya | 17 | Second. |
| | 20 | Namgopal Chaudhuri | 18-7 | First. |
| | | **Deotukun Harkishore H. E. School.** | | |
| Net. | 21 | Niradchandra Pal | 17-8 | First. |
| | 22 | Dineschandra Sarkar | 17 | Second. |
| | 23 | Baidyanath Bagchi | 19-1 | First |
| | 24 | Rameschandra Das (m) | 17-2 | First |
| | 25 | Kumudchandra Sarkar (Mm) | 17-2 | First |
| | | **Netrakona Anjuman H. E. School.** | | |
| | 27 | Gopalchandra Datta (Mm) | 17-1 | First |
| | 28 | Nibaranchandra Rudrasarma | 19 5 | Third |
| | 29 | Digindrakumar Nandi | 16-1 | First |
| | 30 | Abinaschandra Patranabis | 17-3 | First. |
| | 31 | Mohammed Khalilluddin | 21-2 | First |
| | 32 | Mohammad Mafizuddin Talukdar | 22 2 | Third |
| | 33 | Muhammad Kalimuddin | 22 6 | Third |
| | 34 | Abinaschandra Hom | 19 9 | Second |
| | 36 | Chunilal Sanyal | 16-2 | First. |
| | 38 | Saradacharan Datta | 23 | Third |
| | 39 | Md Mockbul Hossain | 18 7 | Second |
| | 40 | Azizul Huq Ahamed | 24 1 | First |
| | 41 | Momuddin Ahamed | 16-2 | Second. |
| | 42 | Md Sarafotali | 18 2 | First |
| | | **Netrakona Dutt High School.** | | |
| | 46 | Dhirendrachandra Majumdar | 16-11 | Third |
| | 48 | Jasodacharan Das | 18-6 | First |
| | 49 | Jogendrachandra Bhaumik | 17-7 | Second |
| | 50 | Pareschandra Ghosh | 17-2 | Third. |
| | 51 | Manindrakisor Talapatra | 17-2 | First |
| | 52 | Jnanranjan Guhathakurta (MLm) | 16 4 | First |
| | 53 | Phanibhushan Dasbhaumik (Mm) | 16 2 | First |
| | 55 | Jitendrakisor Bhattacharyya (Mm) | 18-5 | First |
| | 56 | Rajkumar Saharay (m) | 20 | First. |
| | 57 | Durganath Sinha | 17 1 | Second. |
| | 58 | Pareschandra Bhattacharyya | 17-10 | First. |
| | 59 | Sheikhali Mamud | 17-8 | Second. |
| | 60 | Khan Abdus Subhan | 18-10 | Second. |
| | 61 | Dhirendrachandra Ray | 18-1 | Second. |
| | 62 | Iswarchandra De (V) | 19-1 | Third |
| | 63 | Sachindramohan Ray | 20 2 | Third |
| | 65 | Jajneswar Patranabis (MH) | 19-2 | First |
| | 67 | Biswanath* (MLm) | 16-1 | First. |
| | 68 | Hridaychandra Sarkar | 18 4 | Second |
| | 69 | Satischandra Chakrabarti (M) | 18-8 | First |
| | 72 | Jitendranarayan Sarkar (M) | 19-1 | First |
| | 73 | Syed Serajal Haque | 17-6 | First |
| | | **Netrakona Anjuman H. E. School.** | | |
| | 75 | Jitendrachandra Chakrabarti | 17-3 | First |
| | | **Barhatta Coronation Krishnaprasad Institution.** | | |
| | 76 | Nareschandra Bhadraray (m) | 16-3 | First. |
| | 77 | Sudhansubhusan Datta (LVm) | 17-3 | First. |
| | 78 | Akhilchandra Biswas (m) | 16-3 | First |
| | 79 | Nripendramohan Chaudhuri (M) | 16-2 | First. |

| Roll. | No. | Name | Age. | Division in which the candidate has passed. |
|---|---|---|---|---|
| | | **Barshatta Coronation Krishnaprasad Institution.** | | |
| **Net.** | 80 | Rameschandra Ghosh (m) ... ... | 16-7 | First |
| | 81 | Mahendrachandra Deb | 19-5 | First |
| | 82 | Gajendrakisor Chunge | 17-7 | First. |
| | 83 | Sureschandra Talukdar ... ... | 16-11 | First. |
| | 84 | Nagendranath Biswas | 16-9 | Second |
| | 85 | Jogendrachandra Chakrabarti ... | 17-3 | Second. |
| | 87 | Jatindrachandra Datta | 19-6 | Second |
| | 89 | Reazuddin Bhunya ... | 16-4 | Second |
| | 92 | Abdulkhaleque Ahmed (M) ... ... | 17-1 | First |
| | | **Kendua Spry Institution.** | | |
| | 93 | Manoranjan Biswas (M) ... | 16-5 | First |
| | 94 | Prakharchandra Sen .. | 16-5 | First. |
| | 95 | Sambhas Sennajumdar | 16 9 | First |
| | 96 | Bhupatinath Chaudhuri ... | 16-1 | First |
| | 97 | Jaynath Nath . | 17-1 | First |
| | 98 | Rameschandra Pal ... | 17-3 | First. |
| | 99 | Abdul Halim Khan, I | 16-11 | First |
| | 101 | Muhammad Abul Hossain .. | 20-9 | Second |
| | 102 | Md Maniruddin ... | 24-1 | Second |
| | 103 | Shyek Abdul Munaf (m) ... ... | 19 | First. |
| | 104 | Bahauddin Mallik ... | 16-8 | First |
| | 105 | Md. Aftabuddin Bhuiyan (L) ... | 18 8 | First. |
| | 106 | Md Alefuddin ... | 19 6 | Second. |
| | 107 | Mahammed Jamshed Ali ... ... | 18-2 | Second |
| | | **Netrakona Anjuman H. E. School.** | | |
| | 111 | Bhimchandra Nathbhaumik ... | 18 1 | First. |
| | | **Kendua Spry Institution.** | | |
| | 112 | Lalmohan De ... | 18-9 | Second |
| | | **Teachers.** | | |
| **Net. T** | 1 | M. Mirasuddin ... | 31 | P |
| | 2 | Md Abdul Karim ... | 27-9 | Second |
| | | **Lakhmipur H. E. School.** | | |
| **Nos.** | 1 | Nitischandra Sengupta | 18-3 | First |
| | 2 | Basantakumar Sarma | 16-11 | Second |
| | 5 | Rasaraj Rudrapal ... | 18-2 | Second |
| | 6 | Birendranarayan Ray | 16-7 | First. |
| | 7 | Rajanikumar Pal (M) | 18 6 | First |
| | 9 | Ramchandra Majumdar | 18 | Second. |
| | 10 | Birendrachandra Majumdar .. | 17 4 | Second |
| | 11 | Jayhari Kirtania (m) | 16-1 | First |
| | 13 | Mukundalal Das ... | 16-11 | First. |
| | 14 | Durgamohan Chakrabarti ... | 17-1 | Second |
| | 16 | Jatindrachandra Bhatta | 16-1 | Second |
| | 17 | Jatindramohan Adhikari ... | 17-11 | Second. |
| | 18 | Harimohan Nath ... | 21-5 | Third. |
| | 19 | Kulachandra De ... | 20-3 | Second. |
| | 20 | Mahammad Haris ... | 18 | Third. |
| | 21 | Hashmotullah ... | 22-1 | Third |
| | 23 | Mojibal Haque ... | 19 | First |
| | 24 | Mohammad Mohebullah | 17-7 | First. |
| | 26 | Kazi Amiuddin Ahamed | 17-8 | Second. |

| Roll. | No. | Name. | Age. | Division in which the candidate has passed. |
|---|---|---|---|---|
| | | **Raipur G. C. H. E. School.** | | |
| **Nos.** | 29 | Krishnakumar Nath (M) ... | 17-9 | First. |
| | 30 | Aswinikumar Das ... | 16-8 | Second |
| | 31 | Mahammed Arshadullah ... | 17-2 | Second. |
| | 32 | Mahammad Hares Boksh ... | 19-11 | Third |
| | 33 | A. F. M Gazenfer Ali Chowdhury ... | 17-4 | Third |
| | | **Dattapara R. R. H. E. School.** | | |
| | 36 | Sachindrakumar Chakrabarti ... | 17-1 | First |
| | 37 | Raj Birendranarayan Chaudhuri . | 16-1 | First. |
| | 39 | Nagendrakumar De ... | 18 3 | Second |
| | 40 | Aditikanta Chakrabarti | 18-8 | First. |
| | 43 | Manoranjan Chakrabarti ... | 16-7 | Second. |
| | 44 | Pramathanath Majumdar ... | 16-1 | Third |
| | 53 | Mohammad Yakub Ali | 18-1 | Second. |
| | | **Noakhali Zila School.** | | |
| | 55 | Kesabchandra Bhaumik (Mml) ... | 17 | First |
| | 57 | Binaleuduprakas Das | 16-4 | Second |
| | 58 | Bijayprasanna Das (Mm) ... | 16-11 | First. |
| | 61 | Khagendranath Guharay (m) ... | 17 | First |
| | 62 | Bhupalchandra Narayanchaudhuri ... | 17-1 | Second |
| | 63 | Jagatbandhu Poddar ... | 19-1 | Second |
| | 65 | Sachindrakumar Sen (m) ... | 16 11 | First |
| | 66 | Anantakumar De | 16 | First |
| | 67 | Sankariprasad Mukhopadhyay ... | 16-1 | Third. |
| | 69 | Reyazal Islam ... | 19 2 | Third |
| | 70 | Safiqul Islam .. | 16 | Second |
| | 73 | Kazi Abul Assem Md Enayetullah ... | 16-6 | Second |
| | 74 | Amir Miah ... | 20-10 | Third |
| | 75 | Azizul Huque ... | 17-2 | Second. |
| | 79 | Md. Sayedur Rohman | 20-9 | Third. |
| | | **Noakhali R. K. Jubilee H. E. School.** | | |
| | 81 | Prabodhchandra Balo | 16-1 | First |
| | 82 | Mahendralal Bandyopadhyay ... | 17-7 | First. |
| | 83 | Indubhushan Basu (m) | 17-1 | First. |
| | 85 | Jasodakumar Bhaumik (m) ... | 16 3 | First. |
| | 88 | Jogeswar Chakrabartithakur ... | 16 | Second |
| | 89 | Sudhirranjan Das (m) | 16-3 | First. |
| | 90 | Chittaranjan Dasgupta | 16-9 | First. |
| | 91 | Narendrakumar Dattaray ... | 16-6 | Third. |
| | 93 | Satyaranjan Guha ... | 17 7 | First. |
| | 95 | Nripendrakumar Majumdar ... | 16-8 | Third. |
| | 96 | Satyaranjan Bandyopadhyay ... | 17-4 | Third. |
| | 99 | Bimalapada Chakrabarti | 17-1 | Second |
| | 101 | Bhubaneswar Ghosh ... | 16 3 | Second. |
| | 102 | Sailendrakumar Ghosh | 17-3 | Second |
| | 107 | A. K M. Majibur Rahman ... | 16-10 | Third. |
| | 110 | A. K. M Sujait Hossain | 16-7 | Second. |
| | 112 | Bashir Ulla ... | 19-7 | Third |
| | 113 | Din Ahamed ... | 17-4 | Second. |
| | 118 | Luthful Haider Chowdhury ... | 16-6 | First. |

| Roll. | No. | Name. | Age. | Division in which the candidate has passed. |
|---|---|---|---|---|
| | | **Farashganj H. E. School.** | | |
| Nos. | 120 | Rameschandra Chanda | 17-2 | Second |
| | 121 | Jatindranath Sarkar ... | 16-5 | Second |
| | 122 | Jogeschandra Bhaumik | 20-1 | Second |
| | 123 | Mohammad Ullah ... | 18-6 | First |
| | 124 | Md. Abul Mohsen ... | 16-10 | Second. |
| | 125 | Mesbahuddin Mahmud | 16-8 | Second |
| | | **Noakhali R. K. Jubilee H. E School.** | | |
| | 126 | Nakuleswar Mukhopadhyay (Vm) ... | 19-1 | First. |
| | 128 | Kanchilal Rakshit ... | 17-2 | Third. |
| | 129 | Prankumar Raychaudhuri .. | 16 | Second |
| | 131 | Annadacharan Rakshit | 18-3 | Third |
| | 133 | Nur Mahammad Chowdhury ... | 22-1 | Third |
| | | **Mahammadpur Ramendra H. E. School** | | |
| | 134 | Krishnakumar Banik | 18-8 | Second |
| | 135 | Basantakumar Majumdar ... | 17-6 | Second |
| | 136 | Aswinikumar Das ... | 17 8 | Third |
| | 138 | Harinarayana Das ... | 18-2 | Second |
| | 140 | Shirajuddin Ahammad | 16-11 | First. |
| | | **Begumganj H. E. School.** | | |
| | 142 | Luthful Haque .. | 17 1 | Third |
| | 143 | Mahammad Idris ... | 19-2 | Second |
| | 144 | Reazuddin Ahammad | 17-5 | First. |
| | 145 | Rustam Ali ... | 17-11 | First |
| | 146 | Muradazzaman ... | 16-4 | Third. |
| | 147 | Nader-uz zaman .. | 16-9 | First |
| | 148 | Nural Islam ... | 16-7 | Second. |
| | 150 | Manoranjan Sen ... | 18 8 | Third |
| | 151 | Sachindrakumar Saha | 16-2 | Second |
| | 153 | Jnanendrachandra Ray | 18 11 | First |
| | 154 | Surendralal Majumdar | 20-5 | Third |
| | 155 | Narendrakumar Majumdar ... | 18-4 | Third |
| | 157 | Radharaman Gop ... | 16 3 | Second. |
| | 158 | Indubhushan Ghosh (Mm) ... | 18-1 | First |
| | 159 | Mathuramohan De (Mm) ... | 17-1 | First. |
| | 160 | Jadukrishna Chakrabarti ... | 16 2 | First |
| | 161 | Hemchandra Chakrabarti (M) ... | 16-2 | First |
| | 162 | Radhamadhab Bhaumik | 19-8 | Second. |
| | 163 | Jatischandra Bhaumik | 16-5 | First |
| | 164 | Jasodakumar Bhaumik | 16 5 | Second |
| | 165 | Bagalaprasanna Ghosh | 17-6 | Second |
| | | **Hatiya H. E. School.** | | |
| | 167 | Manoranjan Brahmachari ... | 16-2 | First |
| | 179 | Mosharrof Hossain ... | 19 | Second |
| | | **Panamia T. F. H. E. School.** | | |
| | 186 | Rajkumar Nath (Mm) .. | 16-6 | First |
| | 187 | Haricharan Pal (m) ... | 18 6 | First |
| | 188 | Harikanta Majumdar ... | 17-5 | Third |
| | 189 | Manomohan Pal ... | 18-6 | First |
| | 190 | Md Serajal Hoque ... | 17-6 | First |
| | 191 | Md. Shofiullah ... | 16-1 | Second. |
| | 192 | M. Maphizullah ... | 17-1 | Second. |
| | 193 | Abid Ullah ... | 18-1 | Second. |
| | | **Raipur G. C. H. E. School.** | | |
| | 196 | Jitendrachandra Majumdar ... | 18-1 | First |

| Roll. | No | Name. | Age. | Division in which the candidate has passed. |
|---|---|---|---|---|
| | | **Rajganj Union High School.** | | |
| Nos. | 197 | Mahammad Belayat Hussin Miah ... | 17 2 | Second. |
| | | **Arunchandra H. E. School, Noakhali.** | | |
| | 198 | Hridayranjan Baksi ... | 17-7 | Third |
| | 199 | Mahendrakumar Banik | 17 1 | Second |
| | 200 | Balaram Bhatta *(MLml) ... | 16-2 | First. |
| | 201 | Krishnalal Bhaumik ... | 17-10 | Second |
| | 202 | Mukundalal Bhaumik (m) ... ... | 17-6 | First |
| | 204 | Rabindramohan Das ... | 19-11 | Second |
| | 205 | Harinarayan Gangopadhyay ... ... | 16-1 | Second |
| | 206 | Krishnakumar Majumdar ... ... | 16-5 | Second |
| | 208 | Rasamay Majumdar ... | 16-2 | Second |
| | 209 | Upendrakumar Majumdar ... ... | 17-4 | Third. |
| | 210 | Prabodhchandra Nag *(Lml) ... | 16-1 | First |
| | 212 | Prabhatchandra Pal ... | 18 | First |
| | 213 | Dhirendrakumar Ray... | 18-6 | Second. |
| | 214 | Taraprasanna Ray ... | 18-4 | First |
| | 215 | Debendranath Sarkar... | 18-2 | Second |
| | 216 | Manindramohan Sen (Mm) ... ... | 16-1 | First |
| | 217 | Jitendramohan Sengupta (m) ... | 16 1 | First |
| | 218 | Jnanendranath Sengupta (Mm) ... | 16-6 | First |
| | 219 | Rabindrakumar Sengupta ... ... | 16 7 | Second |
| | 220 | Radhakaraman Sengupta (M) ... | 16 3 | First. |
| | 221 | Uttamkumar Sengupta | 16-3 | First |
| | 222 | Nityamohan Basu ... | 16-8 | Second. |
| | 225 | Anukulchandra Majumdar .. ... | 17-3 | Second |
| | 227 | Girindrakumar Ray ... | 16-3 | Third. |
| | 228 | Dudha Miah ... | 17-1 | Second |
| | 229 | Md Mojibul Hoque ... | 17-3 | Third |
| | 230 | Sultan Mahammed ... | 16-9 | First |
| | 231 | Jamal Abdin ... | 17 8 | Second |
| | | **Dattapara R. R. H. E. School.** | | |
| | 232 | Munindrakumar Chakrabartithakur ... | 17-4 | Second. |
| | | **Rajganj Union High School.** | | |
| | 233 | Kailaschandra Chakrabarti ... ... | 17 | Second |
| | 234 | Atulchandra Gupta (m) | 18 | First |
| | 235 | Krishnabandhu Sarma ... | 17-9 | Second |
| | 236 | Surendrakumar Nag ... | 18-5 | Second |
| | 237 | Radhakanta Majumdar (M) ... ... | 16 7 | First |
| | 238 | Bibhuranjan Majumdar | 17-2 | Second |
| | 247 | Nalinimohan Dasgupta | 16-4 | Second |
| | 248 | Jasodakumar Pal ... | 18-1 | Third |
| | 250 | Sachindramohan Gupta | 16-4 | Third |
| | 251 | Birendranath Chakrabarti ... | 16-3 | Second. |
| | 252 | Sachindramohan Bandyopadhyay ... | 16-1 | First |
| | 253 | Mohammad Wajihullah | 19-3 | Second |
| | 254 | Quadiah Ahammad ... | 17-1 | First |
| | 255 | Quadi Mohmed Serajal Hoque ... | 17-4 | First |
| | 256 | Mohammad Ali Hyder | 17-3 | Second. |

| Roll. | No. | Name | Age. | Division in which the candidate has passed. |
|---|---|---|---|---|
| | | **Chatkhil-Panchgaon Gupta High School.** | | |
| Nos. | 257 | Surendranath Majumdar (Mm) ... | 16 11 | First |
| | 258 | Jagatbandhu Das ... | 18-11 | Second |
| | 259 | Jagatbandhu Nath ... | 16-10 | Second. |
| | 262 | Jasodakumar Chanda ... | 17-10 | Second |
| | 263 | Sitanath Nath ... | 19-5 | Second |
| | 266 | Dineschandra Sen ... | 17 2 | Second |
| | 278 | Debendrakumar Das, I | 17-6 | First |
| | 279 | Sumatibijay Bhaumik | 16-8 | Second |
| | 287 | Mahmedali Azzam ... | 19-6 | Second |
| | 296 | Amanur Rasul (M) ... | 17-4 | First. |
| | 297 | Abdul Latif Miah, I ... | 18 | Second |
| | 299 | Azahar Miah ... | 17-6 | Second |
| | | **Senaimuri H. E. School.** | | |
| | 303 | Gangacharan Nath ... | 17-8 | Third |
| | 304 | Rohinikumar Chakrabarti ... | 18 | Second |
| | 305 | Nalinranjan Majumdar | 16 3 | First |
| | 306 | Pareschandra Datta ... | 17-4 | First |
| | 308 | Jaminikanta Chakrabarti ... | 20-10 | Second |
| | 320 | Md Rahman ... | 25 1 | Second |
| | | **Noakhali Zila School.** | | |
| | 324 | Gholam Mostafa ... | 18-4 | Second |
| | | **Khilpara H. E. School.** | | |
| | 325 | Paresnath Bhattacharyya (W) ... | 16 1 | First |
| | 326 | Surendrakumar Bhaumik ... | 18-9 | Second |
| | 328 | Debendrachandra Chakrabarti ... | 17 9 | Second |
| | 329 | Pramathanath Chakrabarti ... | 16 | First. |
| | 332 | Dwarakanath Karmakar (m) ... | 16-4 | First |
| | 333 | Birendramohan Surray (Ld) ... | 16-6 | First. |
| | 334 | Sudhindrakumar Bandyopadhyay ... | 16 1 | Second |
| | 335 | Birendrakisor Chakrabarti ... | 16-2 | Second. |
| | 336 | Dwijeschandra Chakrabarti ... | 17 10 | Second |
| | 337 | Asutoshnarayan Chaudhuri ... | 17 | First |
| | | **Ramganj-Madhupur Union H. E. School.** | | |
| | 339 | Santoshchandra Basu (m) ... | 16-2 | First. |
| | 340 | Debendrakumar Bhaumik ... | 18-4 | Second |
| | 341 | Rameschandra Chakrabarti ... | 19-1 | Second |
| | 342 | Jogendrakumar De ... | 16-10 | Second |
| | 343 | Kamalasagar Das ... | 18-10 | Second |
| | 344 | Makhanlal Ghosh ... | 17-10 | Second. |
| | 345 | Pramathanath Guha ... | 18 6 | Second |
| | 347 | Harimohan Nath (m) | 17-11 | First |
| | 348 | Harendrakumar Rakshit ... | 17-7 | Second |
| | 350 | Manindrachandra Chakrabarti ... | 20 6 | Third |
| | 351 | Manindramohan Chakrabarti ... | 18-2 | Third |
| | 354 | Fazu Miah ... | 20 10 | Second. |
| | | **Noakhali Zila School.** | | |
| | 359 | Sayed Ahamed (m) ... | 18-1 | First. |

| Roll. | No. | Name. | Age. | Division in which the candidate has passed. |
|---|---|---|---|---|
| | | **Private Students.** | | |
| Nos. P. | 3 | Maulvi Abdul Karim ... | 22-4 | Third. |
| | 7 | Ahamed Hussain ... | 18 | Second. |
| | 8 | Amalendu Dasgupta (m) ... | 19-7 | First. |
| | | **Teacher.** | | |
| Nos. T. | 2 | M Hafizullah ... | 27-3 | First. |
| | | **Sanwarinagar G. B. High School.** | | |
| Pab. | 1 | Akhtarezzaman ... | 16-1 | First |
| | 2 | Khan Abu Md Nazmal Haque ... | 18-7 | Second |
| | 3 | Nawabjan Khan ... | 18-2 | First. |
| | 4 | Md Ibrahimuddin (m) | 16-6 | First |
| | 5 | Mafizuddin Pramanik | 17-8 | Second |
| | 6 | Aftabuddin Sircar ... | 18-9 | Second |
| | 8 | Goljar Hossain Khondkar ... | 19-1 | Second |
| | 10 | Md Majibar Rahaman | 19-2 | Second. |
| | 12 | Sanatkumar Gun .. | 16-2 | First |
| | 13 | Asutosh Maitra ... | 20-9 | Second |
| | 14 | Nrisimhaprasad Bhaumik ... | 17 1 | First |
| | 16 | Dwijendranath Datta (Mm) ... | 18-5 | First |
| | 17 | Haranchandra Kundu | 20-10 | Second |
| | 18 | Jyotischandra Sarkar (m) ... | 18-7 | First |
| | 19 | Mohinimohon Sarkar ... | 19-9 | Third. |
| | 20 | Panchanan Saha ... | 16-8 | First |
| | | **Pabna Institution.** | | |
| | 21 | Hirendranath Sen (Mm) | 17 | First. |
| | 22 | Ambikacharan Chakrabarti (m) ... | 18 | First |
| | 23 | Kisorimohan Pal ... | 19-2 | First |
| | 24 | Dwijadas Maitra (Mm) | 17-11 | First |
| | 25 | Gaurdas Poddar ... | 20 | Second |
| | 26 | Prabhaschandra Poddar (m) ... | 19-1 | First |
| | 28 | Harischandra Majumdar ... | 16 3 | First |
| | 29 | Badalchandra Pal ... | 18-1 | First. |
| | 30 | Sureschandra Sarkar ... | 16-9 | Second |
| | 31 | Ramanimohan Saha ... | 17-11 | Second |
| | 32 | Hrishikes Basak ... | 20-5 | Second |
| | 33 | Kshitischandra Bhaumik ... | 17-1 | First |
| | 34 | Gurupada Saha ... | 18-2 | First |
| | 35 | Pabitracharan Das ... | 17-11 | Second |
| | 36 | Makhangopal Bagchi (m) ... | 17-5 | First. |
| | 37 | Bhubaneswar Pal ... | 16-1 | First |
| | 38 | Taraknath Saha ... | 19-7 | Second. |
| | 39 | Debendranath Ghosh | 19-10 | Second. |
| | 40 | Nikunjabihari Karmakar (Mm) ... | 17 3 | First. |
| | 41 | Debeschandra Ghosh | ... | First. |
| | 42 | Nilkamal Sen ... | 19-3 | Second |
| | 43 | Apurbachandra Lahiri (m) .. | 18 | First. |
| | 44 | Kshitischandra Bandyopadhyay ... | 22-1 | First. |
| | 46 | Mahimathanath Chaudhuri ... | 21-5 | First |
| | 48 | Parasuram Saha ... | 17 9 | Second. |
| | 49 | Dhirendranath Saha (Mm) ... | 16 10 | First. |
| | 50 | Dwijendrahath Das ... | 20-1 | Second. |
| | 52 | Rakhalchandra Chakrabarti ... | 16-4 | Second. |
| | 54 | Santoshkumar Saha (m) | 19-2 | First. |
| | 57 | Anukulchandra Bagchi | 16-10 | Third. |
| | 58 | Jnanendranath Mitra ... | 17-2 | First. |

| Roll. | No. | Name. | Age. | Division in which the candidate has passed. |
|---|---|---|---|---|
| | | **Pabna Institution.** | | |
| Pab. | 59 | Banwarilal Saha ... | 17-10 | First. |
| | 60 | Rasbihari Goswami* (MLmMc) ... | 16-4 | First. |
| | 61 | Sunilchandra Lahiri (Mm) ... | 16-1 | First |
| | 62 | Nirendranath Gupta (m) | 16-1 | First |
| | 63 | Bhupendranath Biswas (M) ... | 16-2 | First. |
| | 64 | Praphullakumar Baksi | 17-2 | Second. |
| | 65 | Upendranath Sarkar (m) ... | 16-3 | First. |
| | 66 | Kshitischandra Guha | 20-1 | Second. |
| | 67 | Bijaychandra Bagchi | 23-10 | Second. |
| | 68 | Haranchandra Saha ... | 18-8 | Second. |
| | 69 | Rohatcharan Chakrabarti ... | 16-9 | First |
| | 70 | Shashthipada Saha ... | 21-4 | Second |
| | 71 | Sriballabh Basak ... | 17-1 | Second |
| | 73 | Rameschandra Chakrabarti ... | 17-4 | Second |
| | 74 | Ahamed Raisuddin (m) | 19-1 | First. |
| | 75 | Mahammad Abdul Jabbar Miah .. | 19-11 | Third |
| | 76 | Basiruddin Ahmed .. | 20-2 | Second |
| | 77 | Akmal Hossain Miah | 16 4 | Second |
| | 82 | Sheikh Abu Bakkar Shiddique ... | 22-1 | Second |
| | | **Chatmohar S. N. H. E. School.** | | |
| | 83 | Jitendra Bhattacharyya | 18-2 | First |
| | 84 | Satyendranath Bhattacharyya . | 19-5 | Second |
| | 85 | Kuberendra Kundu ... | 17-1 | Second |
| | 88 | Jatadhar Saha .. | 18-1 | First |
| | 90 | Kalidas Chakrabarti ... | 16-3 | First |
| | 91 | Gobindachandra Datta | 18-1 | Second |
| | 93 | Jatindranath Majumdar ... | 22-2 | Third |
| | 95 | Manindranath Bhattacharyya ... | 16-2 | Third |
| | 98 | Hazarat Ali Ahamed ... | 17-8 | Second |
| | 100 | Rafatulla Sarkar ... | 23-8 | Second |
| | | **Satbaria H. E. School.** | | |
| | 101 | Md. Sagiruddin Mollah | 17-3 | Second |
| | 103 | Hakimuddin Shaikh ... | 21-4 | Second |
| | 104 | Kshitischandra Biswas | 17-8 | First |
| | 105 | Upendranath Brahma | 18 6 | Second |
| | 106 | Md Mazir Uddin Pramanic ... | 20-4 | Second |
| | | **Bharenga Academy.** | | |
| | 108 | Gurudas Saha ... | 16-7 | Third. |
| | 110 | Manomohan Malakar ... | 16-6 | Second. |
| | 112 | Sarafatuddin Khan ... | 16-3 | Second |
| | 113 | Mir Asgarali ... | 17 | Second. |
| | | **Sara Marwari H. E. School.** | | |
| | 114 | Gopalchandra Mukhopadhyay (m) ... | 16-10 | First |
| | 115 | Dhirendranath Bhattacharyya (ML) ... | 17-10 | First |
| | 116 | Lakshman Hirjee (m) | 16-2 | First. |
| | 117 | Phanibhushan Basu ... | 17-2 | First |
| | 118 | Nripendranath Sen ... | 18-7 | Second |
| | 120 | Asutosh Chaudhuri ... | 18-4 | First |
| | 121 | Kshetranath Haldar ... | 20-10 | Second. |
| | 122 | Birajasankar Maitra ... | 18-10 | Second |
| | 124 | Md. Mayez Uddin ... | 17-3 | First. |
| | 125 | Fakir Mohammed Mia | 21-7 | Second. |

| Roll. | No. | Name. | Age. | Division in which the candidate has passed. |
|---|---|---|---|---|
| | | **Potazia H. E. School.** | | |
| Pab. | 127 | Jitendranath Chakrabarti ... | 20-11 | Second. |
| | 128 | Rabindranath Ghosh ... | 20-1 | Second |
| | 131 | Khagendranath Ghosh | 16-1 | Second. |
| | 132 | Prabhatchandra Nag ... | 17-1 | Second |
| | 134 | Dharanidhar Kundu ... | 17-3 | Second. |
| | 135 | Upendranath Pal ... | 17-11 | Second. |
| | | **Nakalia-Sarasia Merchants' Institution.** | | |
| | 136 | Aswinikumar Lahiri .. | 16-11 | First. |
| | 137 | Ganeschandra Das ... | 20-6 | First |
| | 140 | Birendranath Das ... | 18-3 | Second |
| | 143 | Jyotischandra Majumdar ... | 16-10 | Third |
| | 147 | Abdur Rashid Miah ... | 18-5 | Second |
| | 149 | Mohiuddin Mondal ... | 19-3 | Second. |
| | | **Pabna Zila School.** | | |
| | 150 | Kumudkanta Sen ... | 16-3 | First |
| | | **Sara Bipinbihari H. E. School.** | | |
| | 151 | Md Dwaraguddin ... | 18-1 | Second |
| | 152 | Md Abdul Jalil Khan | 20-1 | Second. |
| | 154 | Sudhirchandra Chaudhuri ... | 19-2 | First |
| | 155 | Nagendranath Das ... | 19-2 | Second |
| | 156 | Sachindranath Sen ... | 22-11 | Second. |
| | 157 | Kshitishchandra Bagchi | 17-1 | Second |
| | 158 | Kaligopal Majumdar ... | 19 10 | Second |
| | | **Daulatpur H. E. School.** | | |
| | 159 | Harunar Rasid Khan . | 16 | First |
| | 160 | Hemantakumar Gun (Lml) ... | 16-5 | First. |
| | 161 | Taranikanta Bhaumik (m) ... | 16-4 | First |
| | 162 | Kotiswar Saha . | 16 2 | First |
| | 163 | Haripada Karmakar ... | 17-10 | Second. |
| | 165 | Harshanath Chakrabarti | 17 2 | First |
| | 166 | Sachindranarayan Chakrabarti .. | 19-1 | Second. |
| | | **Pabna Zila School.** | | |
| | 168 | Gaurangabhushan Das | 21 | First |
| | 169 | Satimohan Sanyal (ml) | 17-4 | First |
| | 170 | Subodhnarayan Chaudhuri (m) ... | 18-10 | First |
| | 171 | Tarapada Saha ... | 18-7 | First |
| | 172 | Satyendrakumar Pal ... | 16-4 | First |
| | 173 | Manoranjan Chakrabarti | 17-1 | First. |
| | 174 | Dharanikanta Majumdar (m) ... | 17-3 | First. |
| | 175 | Amalendu Bagchi (m) | 16-1 | First |
| | 176 | Kumudbandhu Basak | 19 9 | First. |
| | 177 | Atulkrishna Maitra (m) | 16-10 | First |
| | 178 | Sudhindrakumar Gupta (m) ... | 16-1 | First. |
| | 179 | Harendralal Basu ... | 16-5 | First |
| | 180 | Brindabanbihari Basak (Mm) ... | 16 9 | First |
| | 181 | Tushtalal De* (MLm) | 19-1 | First |
| | 182 | Phanibhushan Basu *(MmMc) ... | 16-8 | First |
| | 183 | Kamakhyachandra Lahiri ... | 16-8 | First |
| | 184 | Praphullakumar Basak * | 19-2 | First |
| | 185 | Adhirkumar Sanyal ... | 16-1 | First |
| | 186 | Gopiballabh Saha ... | 16-10 | First |
| | 187 | Mahitosh Maitra ... | 16-6 | First |
| | 188 | Baharuddin Shaikh ... | 19 7 | Second. |
| | 189 | Kazi Abdul Hamid ... | 17 9 | Third. |
| | 191 | Md Isa (ml) ... | 16-4 | First. |
| | 192 | Anwarali Mia. ... | 22-1 | Second. |

| Roll. | No. | Name. | Age. | Division in which the candidates has passed |
|---|---|---|---|---|
| | | **Pabna Zilla School.** | | |
| Pab. | 194 | A K M. Monsur Ali ... | 17-2 | Second. |
| | 195 | Md Akhtar Hosain ... | 18-2 | Second |
| | 197 | Mohammed Wahed Ali | 19 1 | Second. |
| | 198 | Mohammed Sadat Ali | 16-5 | First |
| | | **Daulatpur H. E. School.** | | |
| | 201 | Abdul Kader Bhuiya ... | 20-11 | Third. |
| | | **Khalipur H. E. School.** | | |
| | 203 | Debendranath Bhaumik | 17-1 | First. |
| | 205 | Atulkumar Raha .. | 18-2 | Second |
| | 206 | Surendranath Sarkar ... | 18-2 | Second |
| | 207 | Kalipada Ghosh ... | 20-4 | Second |
| | 208 | Rupendranath Nandi ... | 19 | Third |
| | 209 | Tarakchandra Pal ... | 22-2 | Second |
| | 211 | Afazuddin Ahamed ... | 19-7 | Second |
| | 212 | Mohamed Amanatuddin Miah ... | 17-7 | First |
| | 213 | Mohammed Saadatali ... | 21 9 | Second |
| | | **Salap H. E. School.** | | |
| | 214 | Debendranath Karmakar (Miml) ... | 18-8 | First |
| | 215 | Upendranath Sen (Miml) | 16-10 | First |
| | 216 | Kalipada Lahiri ... | 18-1 | First |
| | 220 | Manindranath Bhaumik (Vl) ... | 19-5 | First |
| | 221 | Manindranath Sanyal | 21-1 | Second |
| | 222 | Sudhirchandra Talukdar ... | 17-9 | Second |
| | 223 | Jatindrakumar Sarkar | 16-6 | Third |
| | 224 | Purnachandra Sarkar ... | 18 | Second |
| | 227 | Rahimuddin Sarkar ... | 17-8 | Second |
| | 228 | Md Mohzuddin Shaikh | 18 1 | Second |
| | 231 | Md Hamider Rohoman Miah ... | 18-3 | Second |
| | | **Parjana M. N. H. E. School.** | | |
| | 235 | Sureschandra Chakrabarti ... | 18 | Second |
| | 236 | Amritalal Sarkar ... | 21-4 | Third |
| | 237 | Madanchandra Saha ... | 21-3 | Second |
| | 238 | Kumarsankar Chakrabarti ... | 19 3 | Second |
| | 239 | Anadigobinda Ray ... | 16-2 | Second |
| | 240 | Afazuddin Sarkar ... | 19-3 | Second |
| | 241 | Kashemali Sarker ... | 18 2 | Third |
| | | **Dhobakhola Coronation H. E. School.** | | |
| | 242 | Surendranath Das ... | 17-9 | First |
| | 243 | Debendranath Basu ... | 16-8 | Second |
| | 244 | Taraprasanna Bhaduri | 16-7 | Second |
| | 247 | Matilal Sil . | 19-11 | Second |
| | 248 | Praphullachandra Lahiri | 16 | First |
| | 249 | Birendranath Bhattacharyya ... | 17-4 | Second |
| | 250 | Hemantakumar Chaudhuri ... | 18 1 | First. |
| | 252 | Abu Md Faizur Rahman Miah ... | 17-4 | Second |
| | 253 | Abdur Razzak Biswas (I) ... | 16-10 | First |
| | 254 | Md. Abdul Kaddus ... | 17-11 | Second. |
| | | **Sitlai H. E. School, Pabna.** | | |
| | 257 | Jnanendramohan Niyogi (M) ... | 16-11 | First. |
| | 258 | Jyotischandra Maitra... | 19-5 | Second |
| | 259 | Bhabanicharan Sarkar | 19-2 | First |
| | 260 | Giridhar Pal (m) ... | 17-3 | First. |
| | 261 | Ramendranath Kundu | 17-8 | Second. |
| | 263 | Rakhalkrishna Majumdar ... | 17-11 | Third. |
| | 264 | Hyderali Ahmed ... | 17-1 | Second. |
| | | **Bharenga Academy.** | | |
| Pab. | 265 | Pranadananda Sarkar... | 19-1 | Second. |
| | | **Radhanagar Majumdar Academy.** | | |
| | 266 | Pranbandhu Sarkar ... | 16-1 | Second. |
| | 267 | Radharaman Gupta ... | 20-5 | Second. |
| | 268 | Jatindranath Chakrabarti (m) ... | 16-1 | First. |
| | 269 | Nanigopal Adhikari (m) | 16-1 | First |
| | 270 | Manindranath Ray (m) | 18-11 | First |
| | 271 | Nityananda Saha ... | 18-1 | First. |
| | 272 | Sarojkumar Majumdar | 18-9 | Second. |
| | 273 | Kalipada Das ... | 18-7 | First |
| | 274 | Nareschandra Sarkar ... | 18-4 | Second |
| | 275 | Mahatabuddin Miah ... | 19-7 | First |
| | 276 | Bondeyali Miah ... | 18-8 | Second |
| | | **Pabna Zila School.** | | |
| | 277 | Dinendranath Saha ... | 16-10 | First. |
| | 278 | Golam Hyder Abu Daud Chowdhury ... | 16-2 | Second |
| | | **Parjana M. N. High School.** | | |
| | 279 | Rabindranath Chakrabarti (Miml) ... | 16 9 | First |
| | 280 | Surathchandra Sanyal | 16 5 | Second |
| | 281 | Taranath Chakrabarti | 18 1 | Third |
| | 282 | Manindranath Sanyal | 19-6 | Second |
| | | **Satbaria H. E. School.** | | |
| | 283 | Ganeschandra Biswas | 21 | Second |
| | | **Bharenga H. E. School.** | | |
| | 290 | Krishnachandra Sil (m) | 16-2 | First. |
| | 292 | Dakshinaranjan Bhattacharyya ... | 18-9 | Second |
| | | **Radhanagar Majumdar Academy.** | | |
| | 293 | Niradendulal Ray ... | 21-4 | Second |
| | | **Baje Shibpur B. K. Pal's Institution.** | | |
| | 294 | Prakaschandra Datta (m) ... | 16 4 | First |
| | | **Murshidabad Nawab Bahadur's Institution.** | | |
| | 296 | Md. Mansurali ... | 18-8 | First |
| | | **Private Students.** | | |
| Pab. P. | 1 | Tarakeswar Bagchi ... | 19-1 | First |
| | 2 | Narendranath Ray ... | 20-2 | First |
| | 3 | Anantakumar Ghatak (m) ... | 17 | First. |
| | 4 | Sureschandra Basu ... | 16-4 | First |
| | 5 | Md Rastumali ... | 21-1 | First. |
| | | **Koondi H. E. School.** | | |
| Rang. | 1 | Saratchandra Bandyopadhyay (M) ... | 18-5 | First. |
| | 2 | Akshaychandra De (ml) | 19-2 | First. |
| | 3 | Baidyanath Datta ... | 19-11 | Second |
| | 4 | Kamalakanta Das ... | 18-2 | Second |
| | 7 | Syamadas Raychaudhuri ... | 18-11 | Second. |
| | 10 | Kafiluddin Ahammed | 16-11 | Third. |
| | 11 | Md Abdur Rouf (Ll) | 16-8 | First. |
| | 13 | Mohammed Abdul Jabbar ... | 22 | First. |
| | 15 | Niamatullah Ahamed | 17-8 | Second |
| | 16 | Mahammed Fazlul Haque ... | 20-1 | Second. |

| Roll. | No. | Name. | Age. | Division in which the candidate has passed. |
|---|---|---|---|---|
| | | **Rangpur Kailasranjan H. E. School.** | | |
| Rang. | 18 | Abdul Majid ... | 16-4 | First. |
| | 19 | Md. Ismailuddin Khan | 16-2 | Second |
| | 20 | Haridas Bagchi (M) ... | 17-1 | First |
| | 21 | Baradasankar Chakrabarti ... | 19-6 | Second |
| | 22 | Baradamohan Das ... | 22-1 | Second |
| | 23 | Kshetramohan Karmakar (m) ... | 16-5 | First |
| | 24 | Dhirendrachandra Lahiri (Mm) ... | 16-2 | First |
| | 25 | Bharatchandra Mahanta | 18-5 | Second |
| | 26 | Nripendrachandra Majumdar (l) ... | 16-1 | First |
| | 27 | Subodhchandra Ray ... | 16 1 | First |
| | 28 | Bhabeschandra Sen* (M Lml) ... | 16-8 | First |
| | 29 | Dhirendralal Sengupta (m) ... | 18 2 | First |
| | 30 | Susilchandra Sengupta | 17 4 | First. |
| | 31 | Pabitrakumar Bhattacharyya ... | 20-5 | Second |
| | 32 | Praphullakamal Chakrabarti ... | 18-3 | First |
| | 33 | Jyotirischandra Dasgupta ... | 17-4 | Second |
| | 34 | Manmohan Majumdar (M) ... | 18-5 | First |
| | 36 | Saurendranath Ray ... | 18-1 | First |
| | 38 | Dhirendrachandra Chaudhuri (MmMc) ... | 17-1 | First |
| | 39 | Anadinath Chaudhuri | 20-1 | Second |
| | 40 | Nirmalchandra Dasgupta (M) ... | 16-4 | First |
| | | **Rangpur Kailasranjan H. E. School.** | | |
| | 42 | Jatindrachandra Lahiri | 16 2 | First |
| | 43 | Manindragopal Lahiri | 16-7 | First |
| | 44 | Bhupatikanta Maitra* (MLVmMc) ... | 16-10 | First |
| | 45 | Manindramohan Mitra | 16-9 | First |
| | 46 | Sudhansusekhar Sanyal (m) ... | 18-4 | First. |
| | 47 | Satyendranath Sen (A) | 19-10 | Second |
| | 48 | Sudhirkumar Sengupta (Mm) ... | 16 1 | First |
| | 49 | Bhupendralal Bagchi | 20-9 | Second |
| | 52 | Anukul Chandra Lahiri ... | 18-7 | First. |
| | 53 | Manomohan Majumdar | 17 3 | First. |
| | 54 | Manindrachandra Raychaudhuri ... | 16-10 | First. |
| | 55 | Mukundachandra Raysarkar ... | 22-1 | Second. |
| | 56 | Jitendranath Sanyal ... | 20 7 | Second |
| | 57 | Sudhirkumar Sarkar ... | 17-4 | Second |
| | 59 | Sureschandra Sen ... | 17-6 | Second. |
| | 60 | Subodhchandra Sengupta ... | 16-1 | First. |
| | 61 | Sudhindranath Chakrabarti ... | 19-10 | First. |
| | 62 | Satyendranath Sen (B) | 16 1 | First |
| | 63 | Bibhutibhushan Lahiri | 16-1 | First. |
| | 64 | Manoranjan Sengupta | 20-2 | Second |
| | | **Rangpur Zila School.** | | |
| | 65 | Mahommed Eanus ... | 16-2 | First. |
| | 66 | Sailendranath Bandyopadhyay ... | 17-3 | First |
| | 67 | Niranjan Bhattacharyya (l) ... | 16-4 | First |
| | 68 | Sasadhar Basu ... | 16-10 | First |
| | 69 | Dhirendramohan Palchaudhuri ... | 16-2 | First |
| | 70 | Nareschandara Ghosh | 18-1 | First |
| | 71 | Jnanendraram Bakai ... | 20-8 | Second. |

| Roll. | No. | Name. | Age. | Division in which the candidate has passed. |
|---|---|---|---|---|
| | | **Rangpur Zila school.** | | |
| Rang. | 72 | Kasiprasad Basu* (Mm) | 17 | First |
| | 73 | Phambhushan Mitra ... | 17-8 | First |
| | 74 | Radhajiban Mukhopadhyay ... | 16-3 | First |
| | 75 | Brindabanchandra Ray (m) ... | 18-3 | First |
| | 76 | Manindranath Sen (m) | 16-2 | First. |
| | 77 | Nabagopal Bhaumik | 19 8 | First. |
| | 78 | Prabodhchandra Biswas (Ll) ... | 18-5 | First |
| | 79 | Jatindranath De ... | 20-9 | First. |
| | 80 | Nareschandra Datta ... | 17 | First |
| | 81 | Pratulkrishna Ghosh ... | 17-5 | First. |
| | 82 | Benimadhab Majumdar | 17-2 | First |
| | 84 | Hariprasanna Ray ... | 17-1 | First. |
| | 85 | Banabihari Sarkar ... | 19-5 | Second. |
| | 86 | Nalinikumar Sen ... | 22-6 | Second |
| | 87 | Raoharuddin Ahmed ... | 19 | Second |
| | 88 | Mahammed Abdul Aziz (m) ... | 16-7 | First. |
| | 89 | Mahmed Emdad Ali ... | 18-7 | Second |
| | 90 | Naziruddin Ahmed ... | 21 | First |
| | 91 | Abdul Jobber ... | 18-2 | First |
| | 92 | Bondeyali Ahmed (Vm) | 16-3 | First. |
| | 93 | Mahammed Shamsul Huda Khan ... | 18-9 | First |
| | 94 | Shamsuddin ... | 19-2 | First |
| | 95 | Zafrunali Ahamed (l) | 18-1 | First. |
| | | **Tajhat H. E. School.** | | |
| | 99 | Babarali Mia ... | 20-2 | Second |
| | 100 | Amareschandra Datta | 16-1 | First |
| | 101 | Syamaprasanna Mukhopadhyay ... | 17-1 | First. |
| | 102 | Chinmay Lahiri ... | 16-6 | First. |
| | 103 | Bhabendranath Deb ... | 16-2 | Second |
| | 105 | Jitendramohan Sarkar | 21-9 | Second. |
| | 107 | Sailendranath Pandit | 19-1 | Second. |
| | 112 | Susilgopal Goswami ... | 18 | First. |
| | 113 | Manindrachandra Ray | 19-7 | Second |
| | 114 | Haridas Datta ... | 19-10 | Second. |
| | 116 | Manoranjan Das ... | 17 | Second. |
| | | **Lalmanirhat H. E. School.** | | |
| | 117 | Pinaybhushan Ghosh (Mml) ... | 19-10 | First. |
| | 118 | Sudhirchandra Ray ... | 16-10 | First |
| | 119 | Bholanath Das ... | 16-5 | First |
| | 121 | Surendranarayan Barma (Ml) ... .. | 16 8 | First. |
| | 122 | Phanezuddin Ahamed | 22 | Second |
| | | **Kurigram H. E. School.** | | |
| | 123 | Narayanchandra Mukhopadhyay ... | 17-11 | Second |
| | 124 | Hiralal Chaudhuri ... | 17-2 | First |
| | 125 | Satyendrachandra Ray chaudhuri (Mm) ... | 17 | First. |
| | 127 | Rabindramohan Gupta | 19 1 | First |
| | 128 | Sureschandra Sarkar ... | 19 | First. |
| | 129 | Jnanadasankar Chakrabarti ... ... | 18 | Second |
| | 130 | Surendrakumar Ray* (MLml) ... | 16 1 | First |
| | 131 | Durgaprasanna Chaki (Mm) ... ... | 19-1 | First. |
| | 132 | Sudhirchandra Basu* (MLVml) ... | 17 | First |
| | 133 | Phanindramohan Bandyopadhyay (m) ... | 16-2 | First. |
| | 134 | Bibhutibhushan Ray (Mm) ... ... | 17-11 | First. |
| | 135 | Ratikanta Das ... | 18-5 | First |
| | 136 | Kalidas Chaudhuri (M) | 20-2 | First. |

| Roll. | No. | Name. | Age. | Division in which the candidate has passed. |
|---|---|---|---|---|
| | | **Kurigram H. E. School.** | | |
| Rang. | 137 | Baijnath Prosad (m) ... | 17-10 | First. |
| | 138 | Charuchandra Chakrabarti ... ... | 18 2 | First |
| | 139 | Sailendramohan Gupta (m) ... ... | 16-1 | First. |
| | 140 | Sachindranath Chakrabarti (l) ... | 16-2 | First |
| | 141 | Susilkumar Sengupta | 16-2 | First. |
| | 142 | Sudhirkumar Talapatra | 17-1 | First |
| | 143 | Pramodranjan Sen (ml) ... ... | 16-1 | First. |
| | 144 | Sachindranath Mukhopadhyay (m) ... | 16-3 | First |
| | 145 | Jitendranath Chakrabarti (Mml) ... | 19-8 | First |
| | 146 | Amritalal Chattopadhyay (L) ... | 19 1 | First |
| | 147 | Jogendrachandra Das (ml) ... ... | 17-4 | First |
| | 148 | Susilchandra Majumdar (Mm) ... ... | 18 3 | First |
| | 149 | Kartikchandra Das .. | 18-7 | First |
| | 150 | Herambachandra Das (m) ... ... | 16-5 | First |
| | 151 | Rajaram Misra ... | 19 2 | First |
| | 152 | Sachindralal Chaudhuri | 16-1 | First |
| | 153 | Jyotischandra Raychaudhuri ... | 16-10 | Third |
| | 154 | Kartikchandra Sarkar | 19-11 | Second. |
| | 156 | Nalinikanta Sarkar ... | 17 | Second |
| | 157 | Rameschandra Barma | 22-1 | Second |
| | 158 | Sudhireswar Dasgupta | 16 | Second |
| | 159 | Mohinimohan Datta ... | 21-2 | Second |
| | 160 | Praphullachandra Bhattacharyya ... | 18-7 | Second |
| | 164 | Nohaluddin Ahmed ... | 19-3 | Second |
| | 165 | Golam Rabbani ... | 17-1 | Second. |
| | 168 | Jasimuddin Ahamed | 19 | Second |
| | | **Kakina Mahimaranjan Memorial H. E. School.** | | |
| | 170 | Jogeschandra Adhikari (M) ... ... | 20-11 | First |
| | 172 | Syamapada Chakrabarti | 17-1 | First. |
| | 173 | Benimadhab Mukhopadhyay (M) ... | 18-6 | First |
| | 174 | Sachindralal Ray ... | 17-3 | Second |
| | 175 | Kanailal Sarkar ... | 24-2 | Second. |
| | 179 | Narendrachandra Sengupta (MmG) ... | 16-6 | First |
| | 180 | Akhilmohan Sen (MmG) | 16-10 | First |
| | 181 | Pramathanath Mukhopadhyay ... | 18-3 | Third |
| | 182 | Binaybhushan Dasgupta ... | 19-9 | Second |
| | 183 | Mohommad Eshaque .. | 16 | First |
| | 184 | Maizuddin Ahamod ... | 19-3 | Third |
| | 185 | Aseruddin Ahmed ... | 18-10 | First |
| | 186 | Omar Ali Mian ... | 20-5 | Second. |
| | | **Tajhat H. E. School.** | | |
| | 187 | Kumudnath Mukhopadhyay ... | 18-4 | Second |
| | 188 | Sudirchandra Chakrabarti ... ... | 19-10 | Third |
| | 189 | Upendrachandra Bairagi ... | 26-3 | Second |
| | | **Rajarampur E. H. E. School.** | | |
| | 201 | Md. Afizuddin Miah ... | 18-9 | Second. |
| | 203 | Md. Ashrafuddin Mulla | 18-6 | Second |
| | 206 | Kasiruddin Ahmed ... | 19-3 | Second. |
| | 207 | Mohammed Eshahque | 18-1 | First. |
| | | **Lalmanirhat H. E. School.** | | |
| Rang. | 209 | Panchkari Das ... | 16-1 | Second |
| | | **Tushbhandar R. M. M. P. Institution.** | | |
| | 210 | Ashubuddin Ahmed ... | 19-1 | Third. |
| | 211 | Lalitchandra Das ... | 19-10 | Second |
| | 212 | Sureschandra Barman | 19-3 | Third. |
| | | **Rajarampur E. H. E. School.** | | |
| | 213 | Abul Moonsur Ahmed-ali Miah ... | 17 5 | Second |
| | | **Barisal Model H. E. School.** | | |
| | 217 | Praphullanath Mukhopadhyay (Ll) ... | 16-5 | First |
| | | **Private Student.** | | |
| Rang. P. | 1 | Md. Abul Kasem ... | 24 6 | First. |
| | | **Ullapara Merchants' High English School.** | | |
| Seraj. | 1 | Rameschandra Chaki ... | 17-6 | Second |
| | 3 | Jogendranath Sinha (m) .. ... | 18-6 | First |
| | 4 | Haranchandra Sarkar | 19-4 | Second |
| | 5 | Sanatkumar Majumdar | 16-1 | First |
| | 6 | Manindranarayan Majumdar (m) ... | 16-4 | First |
| | 7 | Jnanendranath Poddar | 16-8 | First |
| | 8 | Haralal Pal ... | 16 9 | First |
| | 9 | Binaykrishna Saha (Mm) ... | 16 3 | First |
| | 10 | Bidhubhushan Sanyal | 19-7 | Second |
| | 11 | Jnanendranath Kundu | 16-11 | Second |
| | 12 | Jogendranath Saha ... | 16-3 | First |
| | 13 | Ganendranath Saha ... | 17-2 | Second. |
| | 14 | Gopendrakrishna Saha | 16-8 | Second |
| | 17 | Mohammad Asgarali ... | 16-1 | Second |
| | | **Shahazadpur H. E. School.** | | |
| | 18 | Jogiban Bagchi (MLm) ... | 17-1 | First |
| | 19 | Taranath Sarkar (Mm) | 16-2 | First |
| | 21 | Syamapada Sen (Mm) | 17-1 | First |
| | 22 | Mahendranath Deb (MG) ... | 16-3 | First. |
| | 23 | Dhirendranath Chakrabarti ... | 17-5 | First |
| | 28 | Ramanmohan Adhikari ... ... | 17 7 | Second |
| | 30 | Upendranath Chakrabarti ... | 19-7 | Second |
| | 33 | Prangopal Adhikari ... | 21-2 | Second. |
| | 37 | Rostamali Khan (l) ... | 16 | First. |
| | 38 | Abul Hossen Khan ... | 16-3 | Second |
| | 39 | Abdul Jubbar Talukdar | 20-6 | Second |
| | 41 | Asiruddin ... | 16-7 | First. |
| | 42 | Md. Mofakshar Ali (Mm) ... | 16-1 | First. |
| | | **Sthai Pakrasi Institution.** | | |
| | 43 | Jnansankar Chattopadhyay (Mm) ... | 16-6 | First. |
| | 44 | Bhupendranath Gangopadhyay (MLm) ... | 17-11 | First. |
| | 45 | Durganath Pal (m) ... | 18-1 | First |
| | 48 | Bholanath Chakrabarti | 18-3 | Third. |
| | 49 | Surendranath De ... | 18 | Second. |
| | 53 | Manindramohan Saha | 18-7 | Third. |
| | 54 | Rabindramohan Bandyopadhyay ... | 17-1 | Second. |
| | 56 | Khuditam Pramanik ... | 20-11 | Second. |

| Roll. | No. | Name. | Age. | Division in which the candidate has passed. |
|---|---|---|---|---|
| | | **Sthai Pakrasi Institution.** | | |
| Seraj. | 58 | Subodhkumar Biswas | 17 10 | First. |
| | 59 | Jogeswar Chattopadhyay ... | 17-1 | Third |
| | 60 | Birendralal Pakrasi ... | 17 | First |
| | 61 | Susilkumar Pakrasi ... | 16-1 | Second. |
| | 63 | Amulyaratan Ghoshal | 19-1 | Second |
| | 64 | Abhibhushan Bhattacharyya . | 18-1 | Second |
| | 65 | Binaykrishna De . | 17-9 | Second |
| | 71 | Abu Md Mozammel Hoque Talukder ... | 16-5 | First |
| | 73 | Pareshuddin Molla (I) | 16-1 | First |
| | 74 | Kazi Maizuddin Ahamed ... | 19-11 | Second |
| | 78 | Abdul Kader Mia | 18-7 | Second |
| | | **Paisia Rani Dinamani H. E. School.** | | |
| | 80 | Mountazuddin Ahamed | 17-1 | Second |
| | 81 | Ramanikanta Basak . | 16-8 | First |
| | 82 | Jaladhar Das ... | 17-2 | Third |
| | 83 | Rajmohan Ray ... | 23-5 | Second |
| | 84 | Kunjabihari Sil (M) ... | 20-5 | First |
| | 86 | Sailesch.ndra Sen ... | 17 5 | Second |
| | | **Meghai H. S. A. Islamia H. E. School.** | | |
| | 90 | Desharali Miah ... | 18-1 | First |
| | 92 | Md Babar . | 18-3 | First. |
| | | **Harina-Bagbati H. E. School.** | | |
| | 94 | Gopendrachandra Sen (m) ... | 16-1 | First. |
| | 96 | Sudhirchandra Dasgupta .. | 16-6 | Second |
| | 97 | Taranath Bhattacharyya . | 17 | Third |
| | 98 | Murarimohan Bhaumik | 19-1 | Third |
| | 101 | Mahadebchandra Saha | 18-1 | Third |
| | 105 | Abedali Talukder ... | 18-7 | Second |
| | | **Serajganj B. L. High School.** | | |
| | 109 | Rabindranath Biswas[c] (MLm) ... | 16-5 | First |
| | 110 | Gaurchandra Pal[c] (MLm) .. | 16-3 | First |
| | 111 | Praphullakanta Guha (MLm) ... | 16 6 | First |
| | 112 | Bijaychandra Sen (m) | 16-6 | First |
| | 113 | Haripada Bhaumik (V) | 17-11 | First |
| | *114 | Makhanlal Taraphdar (M) ... | 17-10 | First. |
| | 115 | Sudhansukumar Bandyopadhyay (Mm) | 16 1 | First. |
| | 116 | Sudarsan Bandyopadhyay .. | 18-2 | First |
| | 117 | Rebatikanta Ray (m) ... | 16-5 | First. |
| | 118 | Susilkumar Chaudhuri (m) . | 18 10 | First |
| | 120 | Dhirendranath Majumdar .. | 20-3 | Third |
| | 122 | Abinaschandra Saha ... | 19-3 | Second |
| | 123 | Kalicharan Bandyopadhyay (Mm) ... | 16 1 | First |
| | 124 | Manindranath Sen (Mm) | 19-1 | First. |
| | 125 | Durgadas Bandyopadhyay ... | 17-6 | Second. |
| | 126 | Ramaprasad Chattopadhyay ... | 16-2 | Second. |
| | 128 | Bhabeschandra Ray ... | 16 | Second. |
| | 130 | Sureschandra Bhattacharyya ... | 17-3 | First. |
| | 131 | Atulchandra Bhador ... | 18-1 | Second. |
| | 132 | Debkiranjan Mitra ... | 16-10 | Second. |

| Roll. | No | Name | Age | Division in which the candidate has passed. |
|---|---|---|---|---|
| | | **Serajganj B. L. High School.** | | |
| Seraj. | 134 | Jitendranath Chakrabarti ... | 16-8 | Third |
| | 137 | Nanigopal Chakrabarti | 16-11 | First |
| | 139 | Susilchandra Guha ... | 18-2 | Second. |
| | 145 | Bimalaprasanna Talukdar ... | 16-5 | Second |
| | 147 | Mihirgopal Majumdar | 20-3 | Second |
| | 148 | Shaikh Akbar Hossain | 21-4 | Third |
| | 149 | Shukurullah Mondal ... | 17 | First |
| | 150 | Chowdhury Ghulam Mafzol .. | 17-4 | First |
| | 151 | Shakorali Biswas ... | 19-7 | Second |
| | 155 | Sakhawatali Talukder | 17-8 | First |
| | 156 | Md Alauddin Sirkor ... | 17-9 | First |
| | 157 | Md Umedali Serker ... | 21 1 | First. |
| | 158 | Abdul Ghanni Khan (I) | 19-4 | First |
| | 159 | Md Abdur Rohman (I) | 16-4 | First |
| | 160 | Mohiruddin Khan ... | 17 10 | First |
| | 161 | Mir Abdul Hamid .. | 19-6 | Second |
| | 162 | Moazzem Hossain Khan | 17-3 | Second |
| | 164 | Kobadali Talukder .. | 16-6 | Second. |
| | 169 | Md Sahjahan Ali ... | 17-9 | Second |
| | | **Mohanpur Kshitimohan Institution.** | | |
| | 175 | Narayanchandra Ghosh | 17-10 | Second |
| | | **Chowbari Islamia H. E. School.** | | |
| | 178 | Kisorilal Goswami .. | 19-2 | Third |
| | | **Ullapara Merchants' H. E. School.** | | |
| | 179 | Srinarayan Biswas ... | 17-4 | First |
| | | **Shahzadpur H. E. School.** | | |
| | 181 | Mahammedali Sarkar ... | 17-1 | Second. |
| | | **Serajganj Victoria H. E. School.** | | |
| | 182 | Purnachandra Basak .. | 17-2 | First |
| | 183 | Jatindramohan Chakrabarti . | 16-2 | First. |
| | 184 | Kalidas Chakrabarti[c] (Lm) .. | 17-1 | First |
| | 185 | Sudhansusekhar Chakrabarti ... ... | 16-2 | First |
| | 186 | Narendranath Deb .. | 18-3 | Third |
| | 187 | Nanigopal Goswami ... | 16-3 | Second. |
| | 188 | Jatindramohan Saha .. | 17 4 | Second |
| | 189 | Kanailal Saha (m) . | 16 6 | First |
| | 190 | Kalidas Basu (m) ... | 17 5 | First |
| | 191 | Sureschandra Talukdar (M) ... ... | 16-3 | First. |
| | 192 | Rameschandra Ghatak | 16-1 | Third |
| | 193 | Nabadwipchandra Acharyya ... | 19-1 | Third |
| | 194 | Kalidas Bhaduri ... | 17 2 | Second |
| | 195 | Prabhaschandra Datta | 20-7 | Second |
| | 196 | Ganeschandra Majumdar . ... | 22-4 | Second |
| | 198 | Nitaipada Saha ... | 17-11 | Second |
| | 199 | Binaybhushan Sen | 18-1 | Second |
| | 201 | Naushorali Sarker .. | 16-2 | First |
| | 202 | Abdul Mazid Talukder | 16 10 | Second |
| | 205 | Md Rafatuddin Sarkar | 17-5 | Second |
| | 206 | Atsarali Khan ... | 17-2 | First |
| | | **Gopalganj M. N. Institution.** | | |
| | 208 | Sureschandra Datta ... | 19-6 | Second |
| | 209 | Sudhirchandra Datta .. | 17-4 | Second. |
| | | **Private Students.** | | |
| Seraj. P. | 1 | Nandalal Chanda ... | 18-7 | Second. |
| | 2 | Kshitischandra Basu ... | 22-2 | Second. |

| Roll. | No. | Name. | Age. | Division in which the candidate has passed |
|---|---|---|---|---|
| | | **Chatra Nandalal Institution.** | | |
| Ser. | 1 | Subalchandra Pal ... | 19 4 | First. |
| | 2 | Bishnupada Ghosh ... | 18-1 | First |
| | 3 | Bimalkumar Ghosh . | 16-1 | First |
| | 4 | Rameschandra Datta (M) .. | 17 1 | First |
| | 5 | Panchanan Dutta (M) | 17-9 | First |
| | 6 | Maniklal Chattopadhyay (m) .. | 17-4 | First |
| | 7 | Raghunath Chattopadhyay (M) ... | 16-2 | First |
| | 8 | Haradhan Bhattacharyya ... | 18 | Second |
| | 9 | Upendranath Sen (Mm) | 19 1 | First |
| | 10 | Banabihari Das (Mm) | 21-7 | First |
| | 11 | Upendranath Chattopadhyay (Mm) .. | 16 10 | First |
| | 12 | Upananda Modak (M) | 20-7 | First |
| | 13 | Asutosh Basu ... | 18-10 | Second |
| | 14 | Satyasanti Bandyopadhyay ... | 17-8 | Second |
| | 19 | Susilkumar Bhaduri ... | 18-2 | Third |
| | | **Baidyabati Banamali Mukherjee Institution** | | |
| | 20 | Santoshkumar Bandyopadhyay .. | 20-3 | Second |
| | 21 | Sailendranath Nag (Mm) ... | 19 3 | First |
| | 22 | Manindramohan Mukhopadhyay° (MmG) ... | 16-1 | First |
| | 23 | Santoshkumar Chattopadhyay ... | 18-8 | Second |
| | 24 | Bijaymohan Bandyopadhyay ... | 17-3 | Second |
| | 25 | Santoshkumar De ... | 16 3 | First |
| | | **Konnagar H. E. School.** | | |
| | 27 | Prabhatkumar Bandyopadhyay ... | 17 1 | First |
| | 29 | Syamacharan Chattopadhyay° (MLml) ... | 16-8 | First |
| | 30 | Anilkumar Chattopadhyay (MmL) ... | 16-7 | First |
| | 31 | Sudhirkumar Chaudhuri ... | 16-11 | Second |
| | 33 | Herambachandra Dasgupta ... | 18-11 | Third |
| | 34 | Hrishikes De (M) .. | 16-5 | First |
| | 36 | Balbihari Ghoshal ... | 19-8 | First |
| | 38 | Adikesab Laha (Mm) | 18 4 | First |
| | 40 | Sambhunath Mukhopadhyay (Mml) ... | 19-9 | First |
| | 41 | Bipinbihari Mukhopadhyay ... | 18 | First |
| | 44 | Sudhirkumar Basu (m) | 16 1 | First |
| | 46 | Jitendranath Mukhopadhyay ... | 16-2 | Second |
| | 47 | Ramchandra Chattopadhyay ... | 19 1 | Second |
| | 48 | Susilkumar Majumdar | 17-11 | Second |
| | 49 | Subodhkumar Mitra .. | 16 2 | Second |
| | 50 | Ajitkumar Mitra ... | 16-1 | First |
| | 51 | Girijaprasanna Mukhopadhyay ... | 17-8 | Second |
| | | **Kaikala H. E. School.** | | |
| | 52 | Krishnachandra Santra (Mml) ... | 17-5 | First |
| | 53 | Kalicharan Sen ... | 18-1 | First |
| | 54 | Bholanath De ... | 18-2 | Second |

| Roll. | No. | Name. | Age. | Division in which the candidate has passed. |
|---|---|---|---|---|
| | | **Serampur Union Institution.** | | |
| Ser. | 55 | Biswanath Ash (M) ... | 17-3 | First. |
| | 56 | Kanailal Bhattacharyya (V) ... | 16-6 | First |
| | 57 | Dhirendranath Ghosh | 18-8 | Second. |
| | 58 | Panchan Pal (Mm) ... | 17-3 | First |
| | 60 | Ramkrishna Basu ... | 19-4 | Second |
| | 61 | Dhirendranath Datta | 18-4 | Second |
| | 62 | Kapilchandra Datta .. | 16-11 | Second |
| | 63 | Sukumar Datta° (Mm Mc) .. | 16-5 | First |
| | 64 | Birendranath Dhar ... | 16-7 | Second |
| | 65 | Subalchandra Ghosh ... | 17-7 | Second |
| | 66 | Bibhaskumar Ghosh (Mm) ... | 16-4 | First |
| | 67 | Phatikchandra Kundu (M) ... | 16-4 | First. |
| | 68 | Arabinda Mitra (Mm) | 16 | First |
| | 69 | Nityananda Sirmani (Mm) ... | 16-9 | First |
| | 70 | Harimohan Mukhopadhyay (m) ... | 17-10 | First. |
| | 71 | Amarnath Bhattacharyya ... | 16-9 | Second |
| | 72 | Bhabaniprasad Bhattacharyya (M) ... | 16-7 | First |
| | 73 | Prabodhchandra Bhattacharyya ... | 17-7 | First |
| | 74 | Kalicharan Das ... | 17 | First |
| | 75 | Jyotischandra Ghosh | 16 7 | First |
| | 77 | Subodhkumar Lahiri ... | 17-1 | Second |
| | 78 | Phanindranath Mukhopadhyay ... | 17-10 | First |
| | 80 | Tarakumar Mukhopadhyay ... | 17-5 | Second |
| | 81 | Sarojbhushan Mukhopadhyay ... | 18-2 | Second |
| | 83 | Krishnabihari Chattopadhyay ... | 18-11 | Second |
| | 84 | Sunilkumar Ghosh ... | 17-7 | Third |
| | 86 | Khagendranath Ghoshal (M) .. | 17 6 | First |
| | 87 | Sibaprasad Mukhopadhyay (Ml) ... | 17-4 | First |
| | 88 | Bimalkumar Mukhopadhyay ... | 16-4 | Second |
| | 89 | Sudhirchandra Pal ... | 17-3 | Second |
| | 90 | Binaykrishna Pal ... | 21-7 | First |
| | 91 | Dhirendranath Som ... | 16 6 | Second |
| | 93 | Upendramohan Bhattacharyya (M) ... | 17 | First. |
| | 94 | Kasinath Chattopadhyay ... | 18 2 | Second. |
| | 98 | Dwijendralal Lahiri ... | 17-2 | First |
| | 100 | K Luke Eappen ... | 21-5 | Second. |
| | 101 | P G Mathew | 22-8 | First |
| | 102 | K V Mathew ... | 21-8 | Second |
| | 103 | P E John ... | 19 9 | First. |
| | | **Serampur Collegiate School.** | | |
| | 104 | Prabhatchandra Samaddar ... | 17-6 | First. |
| | 106 | Sailendranath Mukhopadhyay .. | 17-1 | Second |
| | 108 | Prabodhchandra Chattopadhyay ... | 21-1 | Second. |
| | 109 | Ekkari Chaudhuri ... | 16-2 | Second |
| | 110 | Birendranath Barui ... | 18-9 | Second. |
| | 112 | Satyacharan Sarkar ... | 16-2 | First |
| | 119 | Namlal Chakrabarti ... | 18-2 | Second. |
| | 114 | Nisirkumar Sen ... | 17 1 | Second |
| | 116 | Sudhirkumar Bhar ... | 17-4 | First. |
| | 117 | Amalchandra Ghosh ... | 17-11 | Second. |
| | 118 | Praphullakumar Biswas | 18-8 | Third |
| | 119 | Bansilal Mistri ... | 19-1 | Second |
| | 120 | Bikasbhushan Basuray (m) ... | 17-1 | First. |

| Roll. | No. | Name. | Age. | Division in which the candidate has passed. |
|---|---|---|---|---|
| | | **Serampur Collegiate School.** | | |
| Ser. | 121 | Amritalal Bong ... | 18 11 | First. |
| | 122 | Prasaddas Basu ... | 16-6 | Second |
| | 123 | Satyendrakumar Biswas | 17 10 | Second |
| | 125 | Tinkari De (m) ... | 16-7 | First |
| | 126 | Abraham P Thomas Deacon ... | 25 1 | Second. |
| | | **Rajbalhat H. E. School.** | | |
| | 127 | Panchnan Saha ... | 21-3 | Second |
| | 128 | Achutyananda Chakrabarti ... | 20-1 | Second |
| | 129 | Prayagchandra Manna (Mm) ... | 18 5 | First |
| | 130 | Kisorimohan De .. | 19 6 | First |
| | 131 | Jaharlal Sil (m) .. | 20 8 | First |
| | 133 | Dasarathi Pan ... | 17-2 | Second |
| | 134 | Sibkrishna Bandyopadhyay ... | 16-4 | First |
| | | **Chittagong Municipal School.** | | |
| | 135 | Sachindrakumar Datta | 16-9 | First. |
| | | **Private Students.** | | |
| Ser. P. | 1 | George Varghese ... | 17-10 | P |
| | 2 | P K Varughese ... | 19 | P |
| | 3 | K G Varughese .. | 17 | P |
| | 4 | K M Elias ... | 21 | P |
| | 5 | K G Mammen | 19 | P |
| | 6 | P K Gobinda Pillai ... | 21 | P |
| | 7 | Varghese K Thomas ... | 19 | P |
| | 8 | K E. Naman ... | 19 | P |
| | 9 | T G. George ... | 19 2 | P |
| | 10 | P C. George .. | 20 4 | P |
| | 11 | Eipe Varghese .. | 25 | P |
| | 12 | P O Chanda Pillay . | 23 8 | P |
| | 13 | K I Koshy ... | 22 | P |
| | 14 | C Philip ... | 19-9 | P |
| | | **Town-Sripur H. E. School.** | | |
| Taki | 1 | Bandyanath Sardar° (MLml) ... | 17-11 | First |
| | 2 | Tarakchandra Mandal (Lm) ... | 16-4 | First |
| | 3 | Sudhendu Bhattacharyya° (L) ... | 17-5 | First |
| | 4 | Krishnapada Ghosh (M L) ... | 17-1 | First |
| | 5 | Binaybhushan Mitra (m) ... | 18 3 | First |
| | 6 | Radhaballabh Mallick (m) ... | 18-2 | First |
| | 7 | Prapullachandra Ghosh | 16 4 | First |
| | 8 | Subodhchandra Bhattacharyya (M) ... | 16-4 | First. |
| | 9 | Asokkumar Sarkar ... | 18-5 | First |
| | 12 | Chittaranjan Bhattacharyya ... | 17-1 | First |
| | 13 | Nanibhushan Majumdar ... | 17-3 | Second |
| | 15 | Subodhkanta Sarkar . | 21 | Second |
| | | **Taki Government School.** | | |
| | 18 | Rameschandra Raychaudhuri . | 17-10 | First. |
| | | **Sir Rajendra-Dhabla Tantra H. E. School.** | | |
| | 19 | Dwijendranath De (Mm) | 19-8 | First |
| | 20 | Jatindranath Ghosh ... | 18-1 | First |
| | 21 | Shaikh Abdur Rofique (M) ... | 19-8 | First |
| | 22 | Indubhushan Gangopadhyay ... | 18-4 | Second |
| | 23 | Shaikh Abdul Gani ... | 21 | Second. |

| Roll. | No. | Name | Age. | Division in which the candidate has passed |
|---|---|---|---|---|
| | | **Babulia J. S. H. E. School.** | | |
| Taki | 24 | Balahari Daphadar ... | 17-5 | First |
| | 25 | Jyotischandra Sen .. | 19-9 | Third. |
| | 30 | Shaikh Goysural Haque | 18-11 | Second |
| | | **Basirhat H. E. School.** | | |
| | 32 | Abanikumar Bandyopadhyay (Mml) ... | 17 | First |
| | 33 | Sachindranath Basu ... | 16 11 | First |
| | 34 | Susilkumar Basu .. | 16-4 | First. |
| | 35 | Mohinimohan Chattopadhyay (m) ... | 17-8 | First |
| | 36 | Bishnupada De (m) ... | 19-1 | First |
| | 37 | Charuchandra De ... | 16-1 | First |
| | 38 | Krishnadas De (m) .. | 16-8 | First |
| | 39 | Mahiuddin Ahmed (Mm) ... | 18 | First. |
| | 40 | Akhilchandra Mallik (MLl) ... | 20 | First |
| | 41 | Momtazali Gazi ... | 16-9 | First |
| | 42 | Dineschandra Majumdar ... | ... | Second |
| | 43 | Indubhushan Majumdar ... | 20-2 | First |
| | 46 | Amarnath Pal° (MLml) | 17-1 | First |
| | 47 | Kalipada Pal° (MLml) | 17-3 | First |
| | 48 | Anadinath Bhattacharyya ... | 16-4 | First. |
| | 49 | Bibhutibhushan Biswas | 20-5 | First |
| | 50 | Surendranath Daphadar | 17-4 | First |
| | 51 | Habibar Rahman ... | 20-2 | Second |
| | 52 | Paresnath Haldar . | 18-11 | Second |
| | 53 | Biswanath Kar .. | 18-11 | Second |
| | 54 | Kumudbandhab Mukhopadhyay ... | 17-1 | Second |
| | 55 | Goshthabihari Sarkar | 18 2 | First. |
| | 56 | Abul Hassan Md. Ebna Qorraishi . | 16-11 | First |
| | 57 | Kazi Maruful Haque ... | 18-4 | Second. |
| | 58 | Abdul Aziz Khan ... | 17-7 | First |
| | 59 | Lathfe Ahamed | 16 3 | First. |
| | 60 | Shaikh Abdul Mabud ... | 20 5 | Second |
| | 61 | Syed Abdul Goffar .. | 19-6 | First |
| | | **Taki Govt. School.** | | |
| | 63 | Shaikh Golam Rahoman | 16-10 | First |
| | 65 | Panchanan Majumdar (m) ... | 17-6 | First |
| | 66 | Harendranarayan Basu | 18 2 | First |
| | 67 | Nandakumar Chaudhuri | 19-7 | First. |
| | 68 | Sachindranath Nandi (Mm) .. | 16-4 | First |
| | 69 | Sadhankrishna Bandyopadhyay (Mm) . | 16-9 | First. |
| | 70 | Nabakumar Das ... | 17-1 | Second |
| | 71 | Krishnagopal Datta (M) | 17 | First |
| | 72 | Rabindranath Basu ... | 20-3 | Second |
| | 73 | Rabindranath Mukhopadhyay (m) ... | 18-1 | First |
| | 74 | Nirendranath Raychaudhuri ... | 17-1 | First |
| | 75 | Binayendranath Basu | 18 9 | Second |
| | 76 | Anilkumar Basu . | 16-1 | First |
| | 77 | Praphullakumar Mukhopadhyay ... | 18-9 | Second |
| | 78 | Jibandhan Bandyopadhyay ... | 18-1 | Second |
| | | **Nakipur H. C. H. E. School.** | | |
| | 80 | Narayandas Bandyopadhyay (Mm) ... | 16-7 | First |
| | 81 | Amarendranath Bhattacharyya (m) . | 16 9 | First |
| | 82 | Chandrakanta Biswas (m) ... | 19-7 | First. |

| Roll | No | Name | Age | Division in which the candidate has passed. |
|---|---|---|---|---|
| | | **Nakipur H. C. H. E. School.** | | |
| Taki | 83 | Kalipada Das° (MVml) | 18-3 | First |
| | 84 | Tarapada Dhali | 17-3 | Second |
| | 85 | Haripada Haldar (Mm) | 19-3 | First |
| | 86 | Sudhirkrishna Mukhopadhyay° (MLml) ... | 17-2 | First |
| | 88 | Susilkumar Chattopadhyay ... | 19-1 | First. |
| | 89 | Haridas Mukhopadhyay | 18 4 | First |
| | 90 | Kalidas Raychaudhuri | 20 | Second |
| | | **Naita H. E. School.** | | |
| | 91 | Atzaddin Mondal ... | 19-2 | First |
| | 94 | Krishnachandra Basu (Mm) .. | 19 6 | First |
| | 96 | Amulyakrishna Gangopadhyay ... | 18 2 | Second |
| | 97 | Pannalal Ghosh .. | 17-2 | First |
| | 98 | Sitanath Sardar ... | 17 | First |
| | 99 | Tarapada Mukhopadhyay (Mml) .. | 16-3 | First |
| | 100 | Praphullakumar Basu | 17 6 | First |
| | 101 | Lalitmohan Sardar (Mm) ... | 19-6 | First |
| | 103 | Lalbihari Das . | 18-11 | Second |
| | | **Satkhira P. N. H. E. School.** | | |
| | 104 | Amiyapada Chattopadhyay ... | 16-6 | First |
| | 107 | Ramanranjan Chattopadhyay ... | 16-2 | First |
| | 108 | Nagendranath Ghosh | 16-6 | First |
| | 109 | Debendranath Mukhopadhyay (m) ... | 17-7 | First |
| | 110 | Ajitkumar Ghosh .. | 16 5 | First |
| | 113 | Narendranath Bhattacharyya ... | 16-2 | Second |
| | 114 | Dhirendranath Basu ... | 17 1 | Second |
| | 116 | Binaykumar Sengupta (H) ... | 16-10 | First |
| | 117 | Pulinbihari Bandyopadhyay ... | 17-2 | Second |
| | 118 | Harinath Mukhopadhyay . | 17-1 | First |
| | 119 | Ejahirah Shana .. | 17-3 | Second |
| | 121 | Zeai Rahman Khan-chowdhury | 16 | Second |
| | 122 | Muhammad Akramah (m) ... | 19-3 | First |
| | | **Taki Govt. School.** | | |
| | 123 | Nareschandra Acharyya | 18-9 | Second. |
| | | **Private Students.** | | |
| Taki P. | 2 | Taradas Ghosh ... | 20 | First |
| | 3 | Ambikacharan Karmakar ... | 31-11 | Second |
| | | **Jamurki Sir Nawab Abdul Gani H. E. School** | | |
| Tang. | 1 | Jasodalal Karmakar (M) ... | 18 4 | First |
| | 2 | Pramathanath Chakrabarti .. | 22-3 | First |
| | 3 | Anadicharan Sengupta (m) ... | 17-7 | First. |
| | 4 | Pramathanath Chanda | 17-3 | First. |
| | 7 | Radhagobinda Saha (I) | 17-4 | First. |
| | 8 | Purnalbihari Ray ... | 16-3 | Second. |
| | 9 | Anilkumar Sarkar ... | 17-7 | Second. |
| | 10 | Hemantakumar Das ... | 17-5 | Second. |
| | 13 | Md. Khalilar Rahaman Khan Eusofzi ... | 20-3 | Second |
| | 14 | Mahzuddin Miah ... | 22-11 | Second. |
| | 15 | Md. Nousherah Miah | 16-4 | First. |

| Roll | No. | Name. | Age. | Division in which the candidate has passed. |
|---|---|---|---|---|
| | | **Nagarpur Jadunath High School.** | | |
| Tang. | 16 | Umacharan Saha (MLm) ... | 19-1 | First |
| | 17 | Ramendranath Bandyopadhyay (Mm) ... | 16-6 | First |
| | 18 | Bidhubhushan Mukhopadhyay (m) ... | 17-4 | First |
| | 19 | Abanikanta Maitra (LH) ... | 18-2 | First. |
| | 20 | Upendralal Saha ... | 17-5 | First. |
| | 21 | Chakradhar Saha .. | 18-5 | Second |
| | 22 | Gurudas Bhaumik ... | 17-5 | Second. |
| | 23 | Akhilchandra Saha ... | 19-2 | Second |
| | 24 | Jatindramohan Saha, I | 18-7 | Third |
| | 25 | Girindrakumar Saha ... | 19 2 | Third |
| | 27 | Himansubhushan Sarkar (VH) ... | 17-8 | First |
| | 28 | Pramathachandra Chakrabarti . ... | 17-2 | Third |
| | 29 | Jatindramohan Saha, II ... | 21-1 | Third |
| | 31 | Khoda Boksha Miah ... | 20-5 | Second |
| | | **Mirzapur S. K. H. E. School.** | | |
| | 32 | Nibaranchandra Sanyal (Mm) ... ... | 16-1 | First |
| | 33 | Sudhansumohan Raychaudhuri (m) ... | 17 3 | First |
| | 34 | Jatindramohan Sanyal | 19-8 | Second |
| | 36 | Umacharan Saha ... | 18-5 | First |
| | 37 | Sureschandra Chakrabarti ... ... | 16-3 | Second |
| | 42 | Manomohan Ghosh ... | 17-9 | Third |
| | 44 | Nripendralal Datta ... | 22 | Second |
| | 45 | Jalaluddin Ahamed ... | 18-3 | Second |
| | | **Santosh Jahnabhi H. E. School.** | | |
| | 46 | Afazuddin Miah (m) ... | 19-7 | First. |
| | 47 | Mahammad Rastamah (Ml) ... ... | 16 | First |
| | 48 | Mahmad Sakayet Hossain Miah (m) ... | 18-1 | First |
| | 49 | Kulendranath Acharyya (m) ... ... | 18-4 | First |
| | 50 | Pramathanath De ... | 16-5 | First. |
| | 51 | Bidhubhushan Mitra (MLl) ... | 17-9 | First. |
| | 52 | Charuchandra Niyogi | 19-3 | Second |
| | 53 | Krishnasankar Niyogi | 19-2 | First |
| | 54 | Dinabandhu Saha ... | 21-1 | Second |
| | 55 | Hiralal Saha ... | 18-2 | First |
| | 57 | Rajendramohan Saha ... | 16-5 | First. |
| | 58 | Nanikanta Sarkar (Mm) ... ... | 20-1 | First |
| | 59 | Bhabeschandra Mazumdar .. ... | 17-2 | First. |
| | 60 | Prabodhchandra Niyogi | 17-4 | First |
| | 61 | Surendrachandra Pal (m) ... ... | 16 | First |
| | 62 | Mahadebchandra Ray (Mm) .. ... | 19-2 | First |
| | 63 | Batakrishna Saha ... | 17-1 | Second. |
| | 64 | Durgapada Chakrabarti ... ... | 17-5 | Third. |
| | 65 | Jogeschandra Karmakar ... ... | 16-6 | First. |
| | 66 | Jnanendranath Sengupta ... ... | 16-7 | Second. |
| | 67 | Girijakanta Bhattacharyya ... | 16-10 | First. |
| | 68 | Nibaranchandra Chakrabarti ... ... | 20-1 | Second. |
| | 69 | Jaygobinda Datta ... | 16 | First |
| | 70 | Kalidas Karmakar ... | 17-1 | Second. |

| Roll. | No. | Name. | Age. | Division in which the candidate has passed. |
|---|---|---|---|---|
| | | **Santosh Jahnabhi H. E. School.** | | |
| Tang. | 72 | Nagendranath Pal ... | 16-7 | First. |
| | 74 | Binodbihari Saha ... | 16-1 | Second |
| | 75 | Jatindramohan Sengupta ... ... | 16-11 | Second. |
| | 76 | Dwijendranath Niyogi | 19-8 | Second |
| | | **Tangail Bindubasini H. E. School.** | | |
| | 77 | Surendramohan Adhikari ... ... | 17-9 | Second |
| | 78 | Girijasankar Bandyopadhyay (m) ... | 16-2 | First |
| | 79 | Himansukumar Bandyopadhyay (m) | 18-7 | First |
| | 80 | Abinaschandra Bhattacharyya ... | 18-9 | First |
| | 83 | Manibhushan Datta (MLml) ... | 16-1 | First |
| | 84 | Kshitischandra Ghosh (MLV) ... | 18-2 | First |
| | 86 | Paresnath Kar ... | 21-2 | Second |
| | 87 | Manindramohan Mukhopadhyay ... | 20-7 | First |
| | 92 | Jatindranath Chakrabarti ... | 17-6 | First |
| | 93 | Sachindrachandra Chakrabarti ... | 16 2 | First |
| | 94 | Purnachandra Guha ... | 19-2 | First |
| | 95 | Sudhirchandra Gupta | 18-1 | Second |
| | 96 | Phanindramohan Mitra | 18-8 | First |
| | 97 | Debeschandra Chakrabarti, I ... | 17-6 | Second |
| | 98 | Phanindranath Chaudhuri ... | 18-2 | First. |
| | 99 | Jatindranath Das ... | 23-1 | Third |
| | 100 | Padmanimohan Datta gupta ... | 18 | Second |
| | 101 | Durlabhchandra Desarkar ... | 17-4 | First |
| | 103 | Debeschandra Chakrabarti, II .. | 18-2 | Second |
| | 104 | Jyotischandra Dattagupta ... | 18-5 | Third |
| | 106 | Sasadhar Pal ... | 20-7 | Third |
| | 108 | Raisuddin Ahamed ... | 16-1 | Second |
| | 109 | Khandaker Abdul Ali | 19-8 | First |
| | 110 | Mahamed Joynal Abedin .. | 16 3 | First |
| | 111 | Jamiruddin Ahamed ... | 19-11 | Third |
| | | **Tangail Shivanath H. E. School.** | | |
| | 116 | Atulchandra Chakrabarti (LM) | 16 | First |
| | 117 | Kshitischandra Saha ... | 16-1 | First. |
| | 118 | Matilal Banik ... | 21-11 | Second |
| | 119 | Nirendralal Chaudhuri | 16-1 | First |
| | 120 | Jnanendralal Chaudhuri | 17-4 | Second |
| | 121 | Asutosh Ghoshthakur (m) ... | 16-3 | Second. |
| | 122 | Jitendranarayan Chakrabarti (ML) ... | 17-7 | Second |
| | 123 | Sudhirchandra Biswas (ML) ... | 17-1 | First |
| | 125 | Jnanendranath Adhikari ... | 17-2 | First. |
| | 126 | Surendranath Panja ... | 17-4 | First |
| | 128 | Bisweswar Bandyopadhyay ... | 18-4 | First |
| | 132 | Phanibhushan Ray ... | 19-1 | Third |
| | 133 | Sachindralal Chaudhuri .. | 18 1 | Second |
| | 134 | Kshirodlal Chaudhuri | 18-1 | Second |
| | 135 | Kalachand Ray ... | 17-1 | Second |
| | | **Tangail Shivanath H. E. School.** | | |
| Tang. | 137 | Debeschandra Chakrabarti ... | 20-11 | First. |
| | 138 | Saurindramohan Ghosh (M) ... | 17-1 | First |
| | 139 | Aswinikumar Saha ... | 17-11 | Second. |
| | 141 | Birendrakumar Sarkarchaudhuri ... | 18 | Second |
| | 143 | Nezamuddin Min (MLml) ... | 19-2 | First |
| | 148 | Nainuddin Sarker ... | 19-7 | Second |
| | | **Salia Coronation H. E. School.** | | |
| | 151 | Rohinikanta Chakrabarti (Mm) .. | 16-6 | First |
| | 152 | Girischandra Das ... | 16 2 | First |
| | 153 | Akshaykumar Das (M) | 17 2 | First. |
| | 154 | Nirmalchandra Ghosh | 16-10 | First |
| | 155 | Dhirendrakumar Saha (Mm) ... | 19 1 | First |
| | | **Dhubaria Seffatoollah High School.** | | |
| | 156 | Makhanlal Ghosh (m) | 17 | First |
| | 158 | Dineschandra Mitra | 18-11 | Second. |
| | 160 | Surendranath Guha ... | 17-1 | Second |
| | 161 | Amiyakanti Ghosh ... | 16-3 | First |
| | 162 | Raghunath Sarkar ... | 19-1 | Second |
| | 164 | Md Abul Kasem ... | 16-4 | Second |
| | 167 | Hiralal Raykarmakar ... | 20-9 | Second. |
| | 168 | Riajuddin Mollah ... | 18-6 | Third. |
| | | **Maishamura Basantakumari H. E. Institution.** | | |
| | 169 | Easimali Khan (Mm) .. | 18-8 | First |
| | 170 | Aswinikumar Mitra ... | 18-6 | Second |
| | 171 | Pramathanath Datta ... | 19 3 | Second |
| | 172 | Nitaichandra Bhaumik | 20 3 | Second. |
| | 174 | Sureschandra Guha ... | 19-3 | Second |
| | 175 | Pareschandra Bhattacharyya ... | 18-2 | Second |
| | | **Dhankora Girls Institution.** | | |
| | 178 | Moslem Ali Ahmed (ml) ... | 16-5 | First. |
| | 181 | Charuchandra Sarkar (M) ... | 16-7 | First. |
| | 182 | Manoranjan Bhattacharyya (m) ... | 16 2 | First |
| | 183 | Susilnath Chaudhuri ... | 20 2 | First. |
| | 184 | Manmathanath Sikdar (m) ... | 17-1 | First |
| | 185 | Haridas Basak ... | 17-1 | Third |
| | 186 | Manindranath Goswami | 16-4 | Second |
| | 187 | Binodbihari Chakrabarti ... | 19-1 | Second |
| | 188 | Adityanath Bhattacharyya ... | 16 | Second |
| | 189 | Abanikumar Bandyopadhyay ... | 17-6 | Third. |
| | 190 | Abinaschandra Sarkar | 20 2 | First |
| | 192 | Jogendralal Bandyopadhyay ... | 16-6 | First |
| | 193 | Bankimchandra Bhattachayya ... | 16 | First |
| | | **Private Student.** | | |
| Tang. P. | 1 | Nibaranchandra Bhaumik ... | 18-1 | Second |

*Calcutta, the 5th July 1923.*

A. C. BOSE, *Controller of Examination.*

# The Calcutta Gazette

WEDNESDAY, JULY 11, 1923.


## PART II.

### *Advertisements.*

### LAND SALE NOTICES.

#### Advertisement of sale.

NOTICE is hereby given that the undermentioned plots of land, no longer required by Government, situated along the Assam Bengal Railway, in the district of Mymensingh, will be put up to sale at 12 o'clock, on the 30th August 1923.

The purchasers of the several plots of land will be subject to the following conditions —

*1st* —The purchasers will have no power to make any excavations on the land nearer than fifteen feet from the railway boundary, or to plough the land nearer than three feet from the same.

*2nd* —If the amount of purchase money does not exceed Rs 100, the whole amount must be paid down at once

*3rd* —If the amount of purchase-money exceed Rs 100, one fourth of the amount must be immediately deposited If the balance be not paid by noon of the fifteenth day after the sale, reckoning the day of sale as one, or if that day be a close holiday, then by noon of the first succeeding office day, the sale shall be cancelled, the sum deposited being forfeited to Government, and the lot again put up for sale at the risk of the defaulting purchaser, after issue of advertisement, as in the case of original sale

*4th* —The plots of land will be sold revenue-free to the highest bidders.

*5th* —The sale will become final on receipt by the Collector of the orders of the Commissioner confirming it, and a regular conveyance will then be granted to the purchaser.

| 1 | 2 | 3 | 4 | 5 | 6 | | 7 | | 8 | 9 |
|---|---|---|---|---|---|---|---|---|---|---|
| Consecutive lot No. | Name of district. | Pargana and mauza | Number of mile on which land is situate. | Situated on which side of the railway | Approximate area of lot in bighas and in acres | | Land excluded from sale from each lot | | Commencement and termination of lot | Boundary of lot. |
| | | | | | B. K. C. | Acres and decimals. | Reasons for exclusion. | Acres and decimals | | |
| 1 | Mymensingh... | Pargana Mymensingh, mauza Char Iswardia. | .. | On the northern side of Assam-Bengal railway at Jogondranagar jute siding | ... | 0·0689 | | | | *North*—By settlement plot No 2107 and lands of Kangugain and Jogar Mea<br>*East*—By settlement plots Nos 2174 and 2175 and lands of Roman Sheik and Sonai Bibi.<br>*South and West*—By settlement plot No. 2108 and lands of Kutub Moral. |

D. M SEN, *for* Collector.

Mymensingh Collectorate, the 19th June 1923.

## Notification B.

NOTICE is hereby given, under sections 5 and 13, Act XI of 1859, that unless the arrears mentioned below are paid on or before the next latest date of payment, viz., the 28th June 1923, the undermentioned estates or shares of estates in the district of Midnapore will be put up for sale at the office of the Collector of that district on the 26th September, at 12 o'clock for the said arrears.

When in columns 5, 7 and 9 of the following statement it is stated that only a share is to be sold, it is to be understood that a separate account is kept for that share —

| Tauzi No. | Name of mahal and pargana. | Sadar jama of whole estate | Whether the whole estate is to be sold | If only a share is to be sold, specification of such share or shares. | Names of proprietors of property to be sold | If only a share is to be sold, the sadar jama of such share. | If the whole estate is to be sold, the arrears due from it. | If only a share is to be sold, the arrears due from it. | Nature and amount of demand for which to be sold. |
|---|---|---|---|---|---|---|---|---|---|
| 1 | 2 | 3 | 4 | 5 | 6 | 7 | 8 | 9 | 10 |
| | | Rs A P | | | | Rs A P. | | Rs. A P | |
| 933 | Pargana Kashijora, mahal Dandeswar | 1,924 4 0 (including police) | | Residuary share excluding separate account Nos 1 to 4 only. 5 as 14 gds 2 c 2 kt share of the mahal will be sold<br>All other shares than that specified will be excluded from the sale | Gouranga Prasad Bhuian and 7 others. | 689 8 6 (including police) | | 307 4 2 | |
| 947 | Pargana Kashijora, mahal Gograna Patna. | 1,512 2 3 (including police). | | Separate account No 1. 10 as 13 gds 1 c 1 kt share of the mahal will be sold<br>All other shares than that specified will be excluded from the sale | Mt R K Nag and 5 others | 1,008 1 6 (including police) | | 85 15 0 (January and March 1923), including police | |
| 1466 | Pargana Khandar mahal Barh Banshi | 19,085 0 0 | | Residuary share excluding separate account Nos 1 to 20 and 22 to 44 only<br>The following shares of the mauzas will be sold —<br>A G C Kt Dt<br>Mauza—<br>Ashapura 0 4 1 2 1<br>Atmarambarh 0 8 3 1 2<br>Atmarambarh kismat 0 17 3 0 1<br>Astidangor 0 17 3 0 1<br>Astidangor kismat 0 17 3 0 1<br>Aymachauk 0 6 0 1 1<br>Bankabheri 0 6 0 1 1<br>Ballavbarh 1 15 2 0 2<br>Bara Chehara 0 8 3 1 2<br>Bagdigoria Sana 1 15 2 0 2<br>Bagdi Palasia 1 15 2 0 2<br>Bagageria 0 8 3 1 2<br>Bagali chak 4 5 1 1 0<br>Baghadangor 0 8 3 1 2<br>Bakhrabadpatra 0 17 3 0 1<br>Barhbansi 1 15 2 0 2<br>Barunchak 1 15 2 0 2<br>Banspukburia 4 5 1 1 0<br>Bilkuma 1 15 2 0 2<br>Benode chak 1 5 1 0 1<br>Bishnu Pandit 8 3 1 0 2<br>Brindaban chak kismat 0 1 15 2 2<br>Bharat chak 0 8 3 1 2<br>Bhim chak 3 0 0 0 0<br>Bhojraj chak 0 4 1 2 1<br>Chaturbhuj chak 0 8 3 1 2<br>Chandagobra kismat 0 8 3 1 2<br>Chand kuri 0 4 1 2 1<br>Chapsahara 0 4 1 2 1<br>Chonga 0 17 3 0 1<br>Dahanandan chak 0 8 3 1 2<br>Darhra 0 4 1 2 1<br>Darara chak kismat 0 4 1 2 1<br>Dwaripatua 0 17 3 0 1<br>Dantonda chak 0 4 1 2 1<br>Duria 0 11 1 0 0<br>Duria chak 0 17 3 0 1<br>Eral chak 1 5 1 0 1<br>Eral Dakshin 0 17 3 0 1<br>Eral kismat 1 5 1 0 1<br>Eral Uttar 1 5 1 0 1<br>Fasil chak 0 4 1 2 1<br>Gangadasbarh kismat 0 17 3 0 1<br>Gangadas chak 0 4 1 2 1<br>Ganak chak 0 17 3 0 1<br>Gunnorlabheri 0 6 0 1 1<br>Gomunda chak 0 6 0 1 1<br>Gopal chak 0 4 1 2 1<br>Haribarh 0 17 3 0 1<br>Harinath chak 0 8 3 1 2<br>Hariram 0 17 0 1<br>Hariram chak 0 17 3 0 1<br>Hatpatua 1 15 2 0 2<br>Hosenpur 0 17 3 0 1<br>Jal chak 0 8 3 1 2<br>Jadu chak 0 17 3 0 1<br>Jamini chak 0 17 3 0 1<br>Jugalbarh kismat 0 17 3 0 1<br>Juned chak 0 17 3 0 1 | Nagendra Kumar Nag and 10 others | 937 2 0 | | 113 5 1 (September 1921 to March 1923) | |

| Tauzi No. | Name of mahal and pargana. | Sadar jama of whole estate. | Whether the whole estate is to be sold. | If only a share is to be sold, specification of such share or shares. | Names of proprietors of property to be sold. | If only a share is to be sold, the sadar jama of such share | If the whole estate is to be sold, the arrears due from it | If only a share is to be sold, the arrears due from it. | Nature and amount of demand for which to be sold. |
|---|---|---|---|---|---|---|---|---|---|
| 1 | 2 | 3 | 4 | 5 | 6 | 7 | 8 | 9 | 10 |
| | | Rs. A P. | | A G C Kt. Dt<br>Mauza— | | | | | |
| 1466 | Pargana Khandar, mahal Barh Banshi. | 19,085 0 0 | | Jotborh chak 0 4 1 2 1<br>Kalung-Kalbara 3 0 0 0 0<br>Kalagechhia chak 1 15 2 0 2<br>Kanchanpur 1 15 2 0 2<br>Kapasgeria 1 15 2 0 2<br>Kapasgeria kismat 1 15 2 0 2<br>Kusia chak 0 4 1 2 1<br>Kaidana 0 4 1 2 1<br>Kolanda . 1 15 2 0 2<br>Krishnageria 1 15 2 0 2<br>Kharika 0 4 1 2 1<br>Kharikabarh 0 17 3 0 1<br>Kharika chak . 0 4 1 2 1<br>Khandarbheri 0 6 0 1 1<br>Kharan chak 0 4 1 2 1<br>Lal chak 0 4 1 2 1<br>Lawdangra 0 17 3 0 1<br>Luahat 1 15 2 0 2<br>Mabarak chak 1 15 2 0 2<br>Madhuban chak 0 17 3 0 1<br>Mahabat chak 0 17 3 0 1<br>Mahammad Kasim chak ... 1 15 2 0 2<br>Masafor chak 0 4 1 2 1<br>Mangalpur . 0 17 3 0 1<br>Manahar chak 1 15 2 0 2<br>Masagan 0 17 3 0 1<br>Modinabari chak 0 17 3 0 1<br>Madhubpur 0 17 3 0 1<br>Mahammad Ali chak 0 4 1 2 1<br>Malpari 0 8 3 1 2<br>Malpari chak 0 8 3 1 2<br>Malikara 0 4 1 2 1<br>Mamudpur 0 17 3 0 1<br>Mamudabas 0 17 3 0 1<br>Mangial 1 15 2 0 2<br>Mana chak 1 5 2 0 1<br>Matkadpur . 0 17 3 0 1<br>Matkadpur kismat 0 17 3 0 1<br>Mirza chak 0 17 3 0 1<br>Nayan chak 0 8 3 1 2<br>Nar 0 4 1 2 1<br>Nibra 1 15 2 0 2<br>Nibra chak 1 15 2 0 2<br>Nurmahammad chak 1 15 2 0 2<br>Nua kismat 1 15 2 0 2<br>Nidhua 0 8 3 1 2<br>Nidhua kismat 0 8 3 1 2<br>Nidhua chak 0 8 3 1 2<br>Paramananda chak kismat 0 8 3 1 2<br>Paschimgeria . 1 15 2 0 2<br>Pathra chak . 0 17 3 0 1<br>Patna chak 0 6 0 1 1<br>Pindrageria 1 15 2 0 2<br>Pithapur 1 15 2 0 2<br>Pithapurbarh 1 15 2 0 2<br>Pithapura chak 1 15 2 0 2<br>Purbageria 1 15 2 0 2<br>Putrangi 0 17 3 0 1<br>Prasadbarh kismat 3 0 0 0 0<br>Pratappur 0 17 3 0 1<br>Ratanchack kismat 3 0 0 0 0<br>Rampal chak . 1 15 2 0 2<br>Ditto 1 15 2 0 2<br>Saiad Bibi chak 1 15 2 0 2<br>Safachar chak 1 15 2 0 2<br>Safichak 1 15 2 0 2<br>Sarfaraz chak 3 0 0 0 0<br>Saluka kismat 0 4 1 2 1<br>Sanchehara 0 8 3 1 2<br>Sanchara 0 4 1 2 1<br>Sahucanpur 0 17 3 0 1<br>Sarangachak .. 0 17 3 0 1<br>Satsai 0 17 3 0 1<br>Sikharchak 0 17 3 0 1<br>Subhadra chak 0 17 3 0 1<br>Sujanagor 0 17 3 0 1<br>San char kismat 0 4 1 2 1<br>Saula Dakshin .. 0 17 3 0 1<br>Shyambhuian chak . 1 15 2 0 2<br>Taladiha .. 0 6 0 1 1<br>Tulshi chak ... 0 4 1 2 1<br>Teghari Junbalida ... 3 0 0 0 0 | | | | | |

[ILLEGIBLE], *for* Collector.

Midnapore, the 17th May 1923.

**List of unclaimed documents of the Calcutta Registry Office for the year 1920 for destruction under section 85 of Act XVI of 1908.**

| Serial No. | Names of parties — Claimant. | Executant | Nature of document | Number of document in Register | Book. | Volume. | Pages. | Date of— Completion of registration. | Refusal. |
|---|---|---|---|---|---|---|---|---|---|
| | | | | | | | | 1920. | |
| 1 | Bengal Loan Company, Ld | Narendra Nath Bhattacherjee | Mortgage .. | 56 | I | 3 | 22-26 | 8th Jan. | |
| 2 | Bholaram Moosaddee and another. | Gora Chand Mullick and others .. | T Lease . | 159 | I | 8 | 31-36 | 13th ,, | |
| 3 | Jamna Das Mandra and another | Maharaj Kumar Dharendra Krishna Deb | Do | 212 | I | 33 | 40-47 | 14th ,, | |
| 4 | Amtoollatai | Asgharbhai Alibhai . | Settlement | 251 | I | 26 | 89-97 | 17th ,, | |
| 5 | Narendra Nath Chatterjee | Hari Charan Dey Sarkar | Release | 301 | I | 26 | 98-103 | 20th ,, | |
| 6 | Kaisar Mirza | Mahmuda Dai | Agreement | 96 | IV | 5 | 33 34 | 20th ,, | |
| 7 | Panchoo Das Bose | A K Co, Ltd, and others . | Security Bond | 109 | IV | 6 | 36-37 | 21st ,, | |
| 8 | Ram Sundar Misser | Sm Lakhpati Thakurani | T Lease | 418 | I | 48 | 13-15 | 27th ,, | |
| 9 | Ram Prosad Sonee and another | Satish Chandra De and others | Indemnity Bond | 657 | I | 11 | 127-130 | 7th Feb. | |
| 10 | Ghurnoo Narain Barma | Hari Ahir | Sale | 342 | IV | 6 | 46-47 | 9th ,, | |
| 11 | Seth Raghunath Prosad Poddar and others | Hari Ram Didwania | Mortgage | 735 | I | 36 | 139-147 | 12th ,, | |
| 12 | | Abdul Karim | Declaration of Trade mark | 318 | IV | 7 | 98-99 | 20th ,, | |
| 13 | Aga Hashar Kashmiri | Bungsidhar Khettry | Reconveyance | 349 | IV | 8 | 92 97 | 24th ,, | |
| 14 | Abdulla Mullick and another | Nalin Chandra Dey | T. Lease | 1114 | I | 29 | 178-180 | 26th ,, | |
| 15 | Abdul Hamid Aymadar | Syed Sakayet Hossain | Sale | 365 | IV | 6 | 71-72 | 27th ,, | |
| 16 | Dr C W. Maine and another | Mahmood Jowah Mamoojee | T Lease | 1211 | I | 57 | 245-254 | 2nd Mar | |
| 17 | Apurba Kristo Mitter and another | Mahendra Narayan Banerjee and others. | Partnership | 373 | IV | 4 | 141-147 | 2nd ,, | |
| 18 | Deb Jiban Banerjee and another | Jatindra Nath Ghose .. | Ditto | 455 | IV | 1 | 264-272 | 11th ,, | |
| 19 | Nazir Ahumed and another . | Abdul Suttar and another . | Agreement | 456 | IV | 6 | 124-126 | 12th ,, | |
| 20 | Jatish Chandra Pal Chowdry | Rakhal Chandra Shau Mandal | Sale . | 1510 | I | 27 | 156-159 | 17th ,, | |
| 21 | Jatish Chandra Pal Chowdry | Gaur Chandra Mandal . | Transfer of mortgage | 1511 | I | 27 | 160-163 | 17th ,, | |
| 22 | Nut Behari Majumdar | Ganga Churn Nag | Sale | 512 | IV | 6 | 151-152 | 23rd ,, | |
| 23 | Pandit Sunder Lal Misra | Balakiram Kahar | Lease | 1769 | I | 68 | 23 25 | 29th ,, | |
| 24 | Shaik Abul Fazal | Gosto Behari Dey | Mortgage . | 1809 | I | 52 | 233-242 | 31st ,, | |
| 25 | Pabitra Chandra Singha | Kalyan Chandra Sinha ... | Sale | 1811 | I | 15 | 268-293 | 7th Apl | |
| 26 | Hara Gobinda Malakar and others | Krishna Behari Gangopadhya | Release | 1902 | I | 77 | 39-41 | 9th ,, | |
| 27 | Bal Kissen Lakshani | Pabitra Chandra Singha | Sale | 2063 | I | 84 | 1-25 | 20th ,, | |
| 28 | Shaikh Imaduddin | Shaik Makdum Baksh and another | Do | 2105 | I | 92 | 30-33 | 22nd ,, | |
| 29 | Purnendu Narain Singha | Satish Chandra Ghatak | Do | 2179 | I | 63 | 186-193 | 23rd ,, | |
| 30 | Hari Dhone Dutt | Narasinga Das Agarwala | T Lease | 2234 | I | 68 | 174 176 | 24th ,, | |
| 31 | Shamsunnesa Bibi and others | Shaik Samnoo . | Do ... .. | 2295 | I | 90 | 35-39 | 27th ,, | |
| 32 | Hira Lal Mandal | Upendra Nath Sadhukhan | Agreement | 781 | IV | 6 | 194 195 | 12th May | |
| 33 | . | Nagendra Nath Shaw | Declaration of Trade mark | 814 | IV | 12 | 98 99 | 15th ,, | |
| 34 | Narang Ray and another | Bepin Chandra Sadhukhan | Sale | 2623 | I | 91 | 119-121 | 17th ,, | |
| 35 | Sushil Kumar Basu and another | Asim Chandra Ghose | Do .. | 826 | IV | 7 | 199-202 | 17th ,, | |
| 36 | | Jnan Chandra Dutta Roy . | Declaration of Trade mark | 867 | IV | 7 | 217-218 | 26th ,, | |
| 37 | | Baidya Nath Byack .. . | Ditto . | 1075 | IV | 17 | 4 5 | 28th June | |
| 38 | Ramendra Nath Mitra . | Natabar Dey and others . | Mortgage | 3215 | I | 115 | 26 29 | 29th ,, | |
| 39 | Annada Bala Dasi | Satya Churn Karmakar .. | T. Lease .. | 3448 | I | 88 | 214-216 | 10th July | |
| 40 | Sitaram Saha and another . | Shaik Sotab Ali .. ... | Mortgage ... | 3443 | I | 101 | 279-280 | 12th ,, | |
| 41 | Debendra Krishna Ghose | Abinash Chandra Ghosal .. | Release .. | 3482 | I | 81 | 291-292 | 12th ,, | |
| 42 | Shaik Mansoor Ali . .. | Tabbar Khan ... . . .. | Sale .. . | 3516 | [illegible] | 125 | 11-14 | 14th ,, | |
| 43 | Patoshi Bibi . .. | Shaik Abdul Rahman .. . | Do. . ... | 3683 | I | 125 | 27-28 | 21st ,, | |

| Serial No. | Names of parties. Claimant. | Executant. | Nature of document | Number of document in register | Book. | Volume | Pages. | Date of— Completion of registration | Refusal |
|---|---|---|---|---|---|---|---|---|---|
| 44 | Anukul Chandra Mookerjee ... | Sachindra Nath Mookerjee .. | Gift .. | 3701 | I | 106 | 226 231 | 1920. 23rd July | |
| 45 | Saren Chand Dutt . .. | Surendra Nath Haldar and another | Reconveyance | 3761 | I | 134 | 54 60 | 27th ,, | |
| 46 | Chuni Lal Rakhit ... .. | Gokul Chandra Chandra . | Release | 3800 | I | 109 | 233 235 | 27th ,, | |
| 47 | Netwar Lall Acharat Lall Nanawati and others | Elias Emmanud Moses Jacob | T Lease | 3857 | I | 128 | 124 128 | 30th ,, | |
| 48 | ... | Mohamed Ahsan . | Declaration of Trade mark. | 1292 | IV | 16 | 108 109 | 31st , | |
| 49 | Sew Prasad Beula .. .. | Baludin Kalwar . | Release | 1299 | IV | 16 | 110-111 | 2nd Aug. | |
| 50 | Yeouf Haju Ahamad | Franklin Marston Leslie and others. | T Lease | 3931 | I | 127 | 145 161 | 4th ,, | |
| 51 | Jatindra Nath Biswas . | Juscuru Baid and another . | Reconveyance | 3917 | I | 115 | 235 243 | 5th ,, | |
| 52 | Prasad Chandra Bej | Manindra Nath Dhara | Sale . | 1382 | IV | 18 | 124 125 | 14th ,, | |
| 53 | Hakimam Hamadey Abdul Khaleq. | Abdul Rashid | Do | 4136 | I | 106 | 250-252 | 17th ,, | |
| 54 | Jyotish Chandra Ray | Sm Indra Mati Debi | Do | 4164 | I | 105 | 298 300 | 18th ,, | |
| 55 | Bata Krishna Dey and another | Sm Kshiroderani Dassi and another | T Lease | 4152 | I | 135 | 144-146 | 19th ,, | |
| 56 | Hari Das Nundy and another | Hajee Kasim Hajee Ebrahim Salehjee and another | Ditto | 4210 | I | 112 | 292 296 | 19th ,, | |
| 57 | Shaikh Asahar Ali | Shaikh Afsuddin Mullick | Release | 1409 | IV | 16 | 150 151 | 19th , | |
| 58 | Bibhuti Bhusan Chatterjee and another. | Manesh Chandra Das Gupta | Partnership | 1536 | IV | 24 | 15-25 | 8th Sept | |
| 59 | Surendra Nath Chakrabarti and another | Shaikh Manjoor Ali Sircar and another | Sale | 1513 | IV | 18 | 192 195 | 14th ,, | |
| 60 | Asmat Ali Mullick and another | Lankhi & Co. | T. Lease | 4614 | I | 151 | 61 63 | 14th , | |
| 61 | Bhabani Churn Bandopadhya | Sm Naresh Nandini Dasi | Release | 4690 | I | 137 | 183 184 | 15th ,, | |
| 62 | Mamana Bibi Bewa | Ujiran Bibi Bewa . | Sale | 4711 | I | 125 | 218 220 | 18th ,, | |
| 63 | Dwijendra Nath Dhar | Jogo Prakash Brambachari .. | Settlement . | 4817 | I | 138 | 248 251 | 28th , | |
| 64 | Haji Meah Mahomed and others | Faseldin and others | Deed of Rectification | 4993 | I | 170 | 1 7 | 5th Oct | |
| 65 | Debendra Nath Sadhookhan | Bhupendra Krishna Ghose | T Lease | 5079 | I | 157 | 161 165 | 8th , | |
| 66 | Abhoy Churn Gangopadhya | Abinash Chandra Sircar | Sale | 1713 | IV | 17 | 237 239 | 12th ,, | |
| 67 | Purnananda Singha | Lachmi Narain Shroff | T Lease | 5562 | I | 178 | 29-36 | 16th ,, | |
| 68 | Muhammad Ali and another | Shaik Ejad Bux and another | Partnership | 1732 | IV | 20 | 221-225 | 16th ,, | |
| 69 | | Gopal Chandra Dutta | Declaration of trade mark | 1734 | IV | 17 | 251-252 | 16th ,, | |
| 70 | Shaikh Mahammad Safi and another | Musamat Khatija Bibi | Sale | 5572 | I | 145 | 265-270 | 8th Nov | |
| 71 | | Ram Ratan Mimani | Declaration of Trade mark. | 1857 | IV | 19 | 268 296 | 25th ,, | |
| 72 | Fakir Mahammad and another | Basiran Bibi | Sale | 6147 | I | 191 | 18-21 | 21st Dec | |
| 73 | | Muhamad Ahamad Dadobhoy | Declaration of Trade mark | 2538 | IV | 28 | 41 42 | 21st ,, | |
| 74 | Shaikh Saidoo Miah and another | Naran Chandra Ruidas | Partnership | 2065 | IV | 24 | 298-299 | 28th ,, | |
| 75 | A. E. Garah and another | Jal F. Karani and another | T Lease | 2 R | II | | . | | 1920 31st March |
| 76 | Shaikh Basir Ali .. . | Narayan Kisson Sen, 1 S O, and another | Reconveyance | 7 S R | II | | | | 10th April |
| 77 | Sarat Chandra Mookerjee | Anango Mohun Pal | Ditto | 8 S. R. | II | | | | 11th ,, |
| 78 | Ajoy Nath Mitter . . | Biressur Mookerjee . | Mortgage | 9 S. R. | II | | | | 12th ,, |
| 79 | Manabendra Kissen Mitter | K. A. B Sadka | T Lease | 3 R | II | — | . | | 4th May |
| 80 | Hari Das Daw . . ... | Kiran Kumar Dutt and another | Surrender of Lease. | 12 S R | II | | | | 28th April |
| 81 | Panna Lal Shaw and another | Shaikh Mohammed Ibrahim and another | T. Lease | 14 S R | II | | | | 6th May |
| 82 | Messrs. J. G. Bagram & Co. and another. | T. M. Aniscough and another . | Ditto | 10 R. | II | | | | 4th Sept |
| 83 | Ban Behari Shaha ... . | Dasarathi Sinha . . | Agreement | 27 S. R | II | | | | 18th ,, |
| 84 | Ochhav Lal Magan Lal Parikh | Dasarath Lal Gordhondas Bhat . | Mortgage .. | 32 S. R | II | | | | 5th Nov |
| 85 | Bijay Lal Seal and another .. | Central Hydraulic Press Co., Ld ... | T. Lease . | 34 S R. | II | | | | 12th ,, |
| 86 | Bhut Nath Pal and others .. | Hari Das Daw ... | Ditto | 13 R | II | | | | 3rd Dec |
| 87 | Land Acquisition Collector of Chittagong. | Gooran Ali *alias* Ichuf Ali Mistri | Indemnity Bond | 1000 | IV | 5 | 287-289 | 14th June | ... |

CALCUTTA REGISTRATION OFFICE,
*The 19th June 1923.*

P. C. CHATTERJI,
*District Registrar of Assurances, Calcutta.*

## The Commissioners for the Port of Calcutta.

**Notice of sale under sections 118 and 119 of the Calcutta Port Act, III of 1890 (B.C.).**

NOTICE is hereby given that the liability of the Commissioners for the undermentioned goods consigned to order ex the undermentioned vessels has, in terms of section 118 of the abovementioned Act, ceased on the expiration of three clear days from the date of landing. These goods accordingly remain on the Port Commissioners' premises at the sole risk and expense of the owners, and if not cleared on or before the 25th August 1923, on payment of all charges due, will be sold by public auction.

| Date of landing. | Marks and numbers. | Quantity. | Description. |
|---|---|---|---|
| | **SHED No. 7.** | | |
| | **SS. "City of Valencia."** | | |
| 11th June 1923... | 418 in a diamond, A W on top, J Co below | 1 | Case lace curtains |
| 9th " " ... | 2556 in a diamond, K S on top ... | 1 | Case advertising matter |
| 13th " " ... | 2393 in a diamond, P Co on top ... | 6 | Cases screws. |
| 9th " " ... | 406 in a diamond, R K on top ... | 7 | Bales cotton goods |
| 18th " " ... | R K C in a block .. ... | 1 | Package earthenware samples |
| 11th " " ... | 1502 in a diamond, 3 S on top .. | 3 | Bales cotton piece goods |
| 12th " " ... | 1501 in a diamond, S S on top ... | 5 | Ditto |
| | **SS. "Explorer."** | | |
| 22nd June 1913... | 898 A in a diamond, J S on top, S L below | 1 | Case cotton goods |
| 22nd " " ... | D D S in a diamond ... | 2 | Cases electric switches. |
| 20th " " ... | D in a triangle, C on top, LL below, 1 ... | 1 | Case |
| 20th " " ... | G M & C in a diamond, E 1764 on top, 1919 Ltd 390941. | 1 | Case auto parts. |
| 19th " " ... | H & C C N B C ... | 2 | Cases drugs. |
| 21st " " ... | H W W & Co 3411 ... | 14 | Coils copper wire. |
| 20th " " ... | J O S Shillong, 496-498 .. ... | 3 | Packages. |
| 20th " " .. | 015 in a diamond, M M on top ... | 1 | Case machinery knives |
| 22nd " " ... | P S & Co in a diamond ... ... | 3 | Cases auto parts. |
| 22nd " " ... | S C C in a block ... ... | 1 | Cask china clay. |
| 22nd " " ... | 3697 Stewart 973759 ... ... ... | 1 | Case automobile parts. |
| 19th " " ... | Y in a diamond, N J on top ... | 1 | Case machinery. |
| | **SHED No. 4.** | | |
| | **SS. "Chupra."** | | |
| 13th June 1923... | B E Co, 2866. 510-14. | 2 | Cases dog spikes. |
| 13th " " ... | E E Co, 6, 2875 ... ... | 2 | Ditto. |

| Date of landing | Marks and numbers | Quantity | Description |
|---|---|---|---|
| | **SHED No. 4** —*concld* | | |
| | **SS. "Chupra"**—*concld* | | |
| 11th June 1923 ... | 388 in a diamond, L F on top, E H C below, 1913-15. | 3 | Cases essential oil. |
| 12th " " ... | P S, 6296-98 ... . ... | 3 | Cases merchandise. |
| 12th " " ... | S M S, 2758 ... . . ... | 1 | Case merchandise. |
| | **SHED No. 2.** | | |
| | **SS. "Maimyo."** | | |
| 11th June 1923... | H M S, N-N ... . ... | 20 | Cases jam |
| 11th " " ... | M E, N-N .. . ... | 20 | Ditto. |
| 11th " " ... | B N Shaw Calcutta in a block, 51-60 ... | 10 | Ditto |
| | **SHED No. 5.** | | |
| | **SS. "Nellore."** | | |
| 11th June 1923 | 433 in a diamond, A W on top, J Co below, 61 | 1 | Case |
| 12th " " ... | B S E Patna J ... ... ... | 1 | Case paints |
| 9th " " ... | B P & Sons, 1-35 ... .. | 35 | Cases. |
| 9th " " ... | C M W L, 122-41, 77-121 ... | 65 | Do. |
| 9th " " ... | G V Co in a diamond, 36-38 ... | 3 | Do |
| 9th " " ... | M I in a triangle, 6153 ... | 1 | Case |
| 9th " " ... | P C B & S in a diamond, 33-34 .. | 2 | Cases. |
| 11th " " ... | P & S 2306 & 2307 ... ... ... | 25 | Cases brandy. |
| 11th " " ... | P & S 2310 ... ... ... | 5 | Cases olive oil. |
| 9th " " ... | S H in a diamond, 19 ... ... | 1 | Case. |
| 9th " " ... | V E F ... ... ... | 10 | Cases wine. |
| | **SHED No. 6.** | | |
| | **SS. "Algio."** | | |
| 19th June 1923 ... | Calcutta, 1-2 ... ... ... | 2 | Cases. |
| 25th " " ... | C A L 1 ... ... ... | 1 | Case. |
| 29th " " ... | Nil ... ... ... | 2 | Bags merchandise. |

| Date of landing. | Marks and numbers | Quantity | Description. |
|---|---|---|---|
| | **DOCK SHED No. 29.** | | |
| | **SS. "Streefkerk."** | | |
| 2nd May 1923 ... | Nil ... ... ... | 1 | Bundle iron saws. |
| 3rd " " ... | Nil ... ... ... | 2 | Packets buttons. |
| | **DOCK SHED No. 6.** | | |
| | **SS. "Jacox."** | | |
| 10th May 1923 ... | Nil ... ... ... | 1 | Case |
| | **DOCK SHED No. 29.** | | |
| | **SS. "Clan Macindoe."** | | |
| 10th May 1923 .. | R V D in a diamond A Y on top, M Z below, 305-07 | 3 | Cases |
| 12th " " .. | Star Works Glenboig .. ... | 24 | Pieces fire-bricks |
| 12th " " . | Nil ... ... .. | 78 | Pieces marble tiles |
| 10th " " .. | 526-22 in a triangle, T V on top, 12 ... | 1 | Case. |
| | **DOCK SHED No. 11.** | | |
| | **SS. "Namsang."** | | |
| 1st June 1923 ... | R No 214 in a diamond, A K on top, C J below, 9639 42 | 4 | Cases. |
| 1st " " ... | R No 245 in a diamond, A K on top, C J below, 9643 44. | 2 | Do |
| 1st " " ... | M S M S in a block, 106-10 ... | 5 | Do |
| | **DOCK SHED No. 1.** | | |
| | **SS. "Torilla."** | | |
| 4th June 1923 ... | M S M S in a block, 101 05 ... | 5 | Cases. |
| | **DOCK SHED No. 29.** | | |
| | **SS. "Novara."** | | |
| 23rd May 1923 ... | 105 in a diamond, A W on top, J Co below, 449-50 | 2 | Cases |
| 22nd " " ... | L J, 32-2 ... ... ... | 1 | Case |
| 23rd " " ... | M I & Co, 1 ... ... ... | 1 | Do. |
| 23rd " " ... | T W T Co in a triangle, 6124 ... | 1 | Do |
| 25th " " ... | W M in a diamond, 57 ... ... | 1 | Do. |
| 23rd " " ... | 215043 in a diamond, B T 11 on top, 175. | 1 | Do. |

H. H. HUDSON, Traffic Manager (offg.)

Port Commissioners' Office, Calcutta, the 11th July 1923. (1298—1)

## Statement of Government Promissory Notes enfaced for payment of interest in London

### Under deduction of amount re-transferred to India, and outstanding in the Books of the Imperial Bank of India on the 30th June 1923.

| Particulars. | 3 per cent. of 1896 97 | 3½ PER CENT. LOANS | | | | | 4 PER CENT. | | INDIAN WAR LOAN. | | |
|---|---|---|---|---|---|---|---|---|---|---|---|
| | | of 1842-43 | of 1854-55 | of 1865 | of 1879. | of 1900-01. | Terminable Loan of 1915-16. | Conversion Loan of 1916-17. | 5 per cent War Loan, 1929-47 | 5½ per cent. War Bonds, 1920 | 5½ per cent. War Bonds, 1922. |
| Balance of 15th June 1923 ... | 19,53,800 | 57,63,000 | 2,92,38,500 | 1,19,20,800 | 36,60,200 | 21,98,050 | 23,400 | 2,40,22,900 | 29,40,450 | 100 | 500 |
| ADD— | | | | | | | | | | | |
| Amount of Loan certificate transferred to Stock in London . . | ..... | .. .. | . .. | . | ... . | ..... | .. .. | .. | | ... . | .. |
| Amount issued in London by conversion under Notification No | ... | . ... | . . | . | . | ..... | . . . | ..... | . . . | . ... | ..... |
| Amount enfaced at Madras up to | | | . | .. | . . . | . ... | .. ... | | | | ... .. |
| Amount enfaced at Bombay up to 22nd June 1923 . .. | ... | ... | .. | | . | | ..... | | . | ... . | .. . |
| Amount enfaced at Calcutta between and 19 .. | ... . | .. | ... | . | | . | . | ... .. | | .. | ..... |
| Total | 19,53,800 | 57,63,000 | 2,92,38,500 | 1,19,20,800 | 36,60,200 | 21,98,050 | 23,400 | 2,40,22,900 | 29,40,450 | 100 | 500 |
| DEDUCT— | | | | | | | | | | | |
| Amount written off in the London Registers .. .. .. | ... | 1,000 | 48,300 | 2,000 | 5,000 | 13,500 | . . | . | 1,200 | . . | |
| Balance on 30th June 1923 | 19,53 800 | 57,62,000 | 2,91,89,700 | 1,19,18,800 | 36,55,200 | 21,84,550 | 23,400 | 2,40,22,900 | 29,39,250 | 100 | 500 |

| Particulars. | SECOND INDIAN WAR LOAN. | | | 5 per cent Loan, 1945-55 | Ten year 6 per cent. Bonds, 1930 | Five year 6 per cent. Bonds, 1926 | Ten year 6 per cent Bonds, 1931 | Five year 6 per cent. Bonds, 1927 | Ten year 6 per cent Bonds, 1932 | Total |
|---|---|---|---|---|---|---|---|---|---|---|
| | 5½ per cent War Bonds, 1923 | 5½ per cent. War Bonds, 1925 | 5½ per cent War Bonds 1928 | | | | | | | |
| Balance of 15th June 1923 .. | 5,000 | 47,600 | 2,34,275 | 3,90,800 | 23,07,900 | 52,87,800 | 67,06,600 | 30,90,800 | 41,73,600 | 10,39,66,075 |
| ADD— | | | | | | | | | | |
| Amount of Loan certificate transferred to Stock in London . . | | | | | ..... | | .. . | . | . . | .. ... |
| Amount issued in London by conversion under Notification No | . ... | . .. | .. . | | . | .. .. | ..... | .. . | . | ... .. |
| Amount enfaced at Madras up to | . .. | .. | .. | .... | | ... | ..... | . ... | ..... | ..... |
| Amount enfaced at Bombay up to 22nd June 1923 ... .. . | . . | ..... | .. | . | ... .. | . | .... | ..... | 59,700 | 59,700 |
| Amount enfaced at Calcutta between and 19 . .. | .... | ... | . | . . | ... | ... . | ..... | ... | . . | . |
| Total . | 5,000 | 47 600 | 2,34,275 | 3,90,800 | 23,07,900 | 52,87,800 | 67,06,600 | 30,90,800 | 42,33,300 | 10,40,25,775 |
| DEDUCT— | | | | | | | | | | |
| Amount written off in the London Registers .. .. | ..... | .. . . | . | . . | .... | 1,00,000 | . .. | 2,00,000 | 25,200 | 3,96,700 |
| Balance on 30th June 1923 ... ... | 5,000 | 47,600 | 2,34,275 | 3,90,800 | 23,07,900 | 51,87,800 | 67,06,600 | 28,90,800 | 42,08,100 | 10,36,29,075 |

NOTE.—From 9th June 1867 to 30th April 1923—Enfaced from India 13,098 lacs re-transferred from London 13,411 lacs.
" 1st May 1923 to 15th May " " " " 17 " " " " 1 lac
" 16th " " to 31st " " " " " 8 " " " " 16 lacs
" 1st June " to 15th June " " " " 2 " " " " 14 "
" 16th " " to 30th " " " " " 1 lac " " " 4 "
13,126 lacs. 13,446 lacs.

J. A. GILBERT,
*Superintendent.*

S. A. H. SITWELL,
*Secretary & Treasurer.*

PUBLIC DEBT OFFICE, IMPERIAL BANK OF INDIA,
*Calcutta, the 6th July 1923.*

## IMPERIAL BANK OF INDIA.

***Statement of the affairs of the Imperial Bank of India on the 28th June 1923.***

**LIABILITIES.**

| | Rs | A | P |
|---|---|---|---|
| Subscribed Capital ... ... ... ... | 11,25,00,000 | 0 | 0 |
| Capital paid up ... .. ... | 5,62,50,000 | 0 | 0 |
| Reserve ... ... ... .. .. ... | 4,22,50,000 | 0 | 0 |
| Public Deposits ... ... ... . ... | 12,37,77,000 | 0 | 0 |
| Other Deposits ... .. .. .. ... | 68,26,08,000 | 0 | 0 |
| Loans against securities per contra .. ... | . .. | | |
| Contingent liabilities .. ... ... ... | . ... | | |
| Sundries ... ... ... ... ... ... | 1,91,67,000 | 0 | 0 |
| | 92,42,52,000 | 0 | 0 |

**ASSETS.**

| | Rs | A. | P. |
|---|---|---|---|
| Government Securities ... ... ... | 8,15,54,000 | 0 | 0 |
| Other authorized securities under the Act | 1,28,89,000 | 0 | 0 |
| Loans ... . ... ... ... ... | 15,46,55,000 | 0 | 0 |
| Cash credits .. ... .. .. ... | 29,64,02,000 | 0 | 0 |
| Inland bills discounted and purchased .. | 5,17,84,000 | 0 | 0 |
| Foreign bills discounted and purchased ... | 28,98,000 | 0 | 0 |
| Bullion . ... ... ... ... | ..... | | |
| Dead Stock ... ... . ... ... | 2,50,22,000 | 0 | 0 |
| Liability of constituents for contingent liabilities per contra .. . ... | ..... | | |
| Sundries .. ... ... .. ... | 83,17,000 | 0 | 0 |
| Balances with other Banks . ... ... | 77,50,000 | 0 | 0 |
| | 64,02,16,000 | 0 | 0 |
| Cash ... ... .. ... .. ... | 28,40,36,000 | 0 | 0 |
| | 92,42,52,000 | 0 | 0 |

The above balance sheet includes—

| | | |
|---|---|---|
| Deposits in London ... ... ... ... ... | £ | 741,900 |
| Advances in London . ... .. ... ... | £ | 244,800 |
| Cash and balances at other Banks in London ... | £ | 508,600 |

Percentage 84 39

Bank Rate 4 %

R. AITKEN,

W. B. HUNTER,

Managing Governors.

Calcutta, the 5th July 1923. (1281—1)

## Proclamation of Sale.

TO be peremptorily sold by the Sheriff of Calcutta in his sale-room on Friday, the 10th day of August 1923, at 12 o'clock noon, pursuant to an order made by the High Court of Judicature at Fort William in Bengal in its Ordinary Original Civil Jurisdiction in Execution Case No. 68 of 1922 (wherein C V. C T K. R Chetty is the decree-holder and Esoff Mohammed Parekh and others are the judgment-debtors) and dated the 1st day of February 1923 the right, title and interest of Mohammed Ismail Mohammed one of the judgment-debtors aforesaid in the following property :—

All that the partly three and partly two storied tenanted or dwelling house together with the land thereunto belonging whereon or on part whereof the same is erected and built containing by estimation 10 cottahs 2 chitaks 10 square feet be the same a little more or less situate and lying at and being premises No. 19, Amratolla Street, being holding No 83 in Block No XI in the North Division of the town of Calcutta an annual Government revenue of Re 1-14-5 being payable to the Calcutta Collectorate in respect of the said holding and butted and bounded in the manner following, namely —

On the north by the house now or lately belonging to Heeralal Mullick, on the east by Amratolla Street, on the south by the house and land belonging to the Armenian Church and on the west by the house of Kasturamull.

So far as the decree-holders have been able to ascertain the said judgment-debtor Mahommed Ismail Mohammed is entitled to an undivided $\frac{11}{24}$th share of the said premises No. 19, Amratolla Street. By a search in the records of the Registrar of Assurances at Calcutta from 1865 to March 1923 it appears that the said premises No. 19, Amratolla Street, are subject to the following encumbrances in respect whereof no release has been found to have been executed —

(1) Deed of equitable mortgage executed by Howa Bibi and others in favour of Ramprotap Chamaria and another, dated 9th March 1917, for Rs 1,00,000, bearing interest at 8 per cent per annum payable monthly with quarterly rests and registered in book 1, Vol. 41, pages 168-177, being No 990 for 1917.

(2) Transfer of the above equitable mortgage executed by the above mortgagees in favour of Hossain Ebrahim Saleji and dated 20th January 1920 for Rs 1,26,221-5 and registered in book 1, Vol. 36, pages 44-55, being No 357 for 1920.

The amount for the recovery of which the sale has been ordered is Rs 15,707-2 together with the costs of execution less Rs. 3,272-5-1 paid on the 12th June 1922

The conditions of sale can be seen at the office of the Sheriff on any day before the sale and will be produced at the sale

M. M. ALI NAKEY, Sheriff.

Suresh Chandra Mookerjee & Co., Plaintiffs' Attorneys.
Sheriff's Office, Calcutta, the 4th July 1923.

(1275—1)

### Proclamation of sale.

TO be sold by the Sheriff of Calcutta in his sale-room in the Court House, on Friday, the tenth day of August 1923, at 12 o'clock noon, pursuant to the decree and order made in suit No. 1915 of 1922 (Rabindra Nath Dutt *versus* S. Abdul Haq Mahomed Ishaq) and dated, respectively, the 24th day of July 1922 and 9th day of April 1923, the right, title and interest of Abdul Haq, a member of the defendant firm abovenamed, in the following property, viz :—

All that two-storied brick-built messuage or dwelling house together with the piece or parcel of revenue paying land thereunto belonging containing by estimation 3 cottahs 23 square feet in block No XVII, Holding No. 264, South Division, and being No 2, Free School Street, in the town of Calcutta, butted and bounded on the north by Mott's Lane, on the east by Free School Street, on the south by the tenanted land of Lukhmaram Sett and on the west by the house of Butto Kristo Dutt and paying an annual revenue of annas 10-4 to the Collector of Calcutta.

From a search made at the Registry Office from the year 1865 to 1923, it appears that there are no encumbrances affecting the said premises No. 2, Free School Street, save and except the following, viz —

(1) Indenture of security bond executed by the defendant firm abovenamed and the said Abdul Haq, in favour of the Registrar, High Court, charging the said premises for Rs. 4,727-12-6 in suit No. 2333 of 1920 and registered at Calcutta Registration Office, in book I, Volume 23, at pages 69 to 73 being No 295 for 1921.

The sum for the recovery of which the sale has been ordered is Rs. 9,069-7-6 together with interest from 24th July 1922 until realization and the costs of execution.

The condition of sale can be seen at the office of the Sheriff of Calcutta at any time before the sale and will be produced at the sale.

M M ALI NAKEI,
Sheriff

N C Bural & Pyne, Attorneys for the plaintiff.

6, Old Post Office Street, Calcutta, 4th July 1923

(1274—1)

---

### In the High Court of Judicature at Fort William in Bengal, in Insolvency.

No 100 OF 1918

*Re* . Damodardas Daga, debtor

*Ex parte* · Bansidhar Karnani, creditor

To Damodardas Daga, the debtor abovenamed, and Babu N G Roy, his attorney, and G M Falkner, Esq, Official Assignee of Calcutta and Assignee of the estate and effects of the debtor abovenamed.

PLEASE take notice that on the 23rd day of July 1923 at the hour of 11 o'clock in the forenoon or so soon as the matter can be heard an application will be made before the learned Registrar in insolvency on behalf of Bansidhar Karnani, one of the creditors of the abovenamed debtor, for an order that the order of adjudication made herein on the 27th day of June 1918 on the petition of the debtor abovenamed be set aside or annulled and that the costs of and incidental to this application be paid by the debtor abovenamed.

Dated this 29th day of June 1923.

SURENDRO CHUNDER GHOSE, applicant's attorney.

*Grounds* :—Petition of Bansidhar Karnani, the creditor abovenamed, affirmed on the 28th day of June 1923.

(1287—1—1307)

---

ORDER OF ADJUDICATION

[*Section 16 of the Provincial Insolvency Act, V of 1920.*]

### In the Court of the District Judge at Chittagong.

INSOLVENCY APPLICATION No 12 OF 1923.

PURSUANT to a petition, dated 24th April 1923, filed by Anwar Ali, son of Meajan, of Madarsha, police-station Hathazari, district Chittagong, and on the application of the debtor himself and on reading his petition and hearing his pleader it is ordered that the debtor be and the said debtor is hereby adjudged insolvent, and is directed to apply for his discharge within six months Mr Percival is appointed Receiver.

Dated this 29th day of June 1923

J W. NELSON, District Judge.

(1258—1)

---

NOTICE TO CREDITORS OF APPLICATION FOR DISCHARGE.

[*Under section 41 of the Provincial Insolvency Act, V of 1920* ]

### In the Court of the District Judge at Chittagong.

INSOLVENCY CASE No 7 OF 1922

Abdul Hoque, son of Abdul Ghani Sadagar, of Bakalia, police-station Panchlaish, district Chittagong, insolvent, petitioner

TAKE notice that the abovenamed insolvent has applied for his discharge and that the Court has fixed the 23rd day of July 1923, at 10 o'clock, for hearing the application

Dated this 30th day of June 1923

J. W NELSON, District Judge

(1259—1)

---

NOTICE TO CREDITORS OF APPLICATION FOR DISCHARGE

(*Under section 41 of the Provincial Insolvency Act, V of 1920* )

### In the Court of the District Judge of Chittagong.

INSOLVENCY CASE No. 32 OF 1922

Mahammad Abdul Jobbar, son of Basir Mohammad Sadagar, of Patharghata, police-station Kotwali, district Chittagong, insolvent, petitioner

TAKE notice that the abovenamed insolvent has applied for his discharge and that the Court has fixed the 23rd day of July 1923 at 10 o'clock for hearing the application

Dated this 30th day of June 1923

J. W. NELSON District Judge

(1260—1)

---

ORDER OF ADJUDICATION

[*Section 16 of the Provincial Insolvency Act, V of 1920* ]

### In the Court of the District Judge at Chittagong.

INSOLVENCY APPLICATION No 14 OF 1923.

PURSUANT to a petition, dated 21st May 1923, filed by Amin Sarif, son of Chand Mea, of Chandgong, police-station Panchlaish, district Chittagong, and on the application of the debtor himself and on reading his petition and hearing his pleader it is ordered that the debtor be and the said debtor is hereby adjudged insolvent, and is directed to apply for discharge within six months from this date Mr Percival is appointed Receiver.

Dated this 29th day of June 1923.

J. W. NELSON, District Judge

(1269—1)

NOTICE.

**In the Court of the District Judge of Dacca.**

INSOLVENCY CASE No. 1 OF 1922

Chandra Nath Shaha, insolvent

TAKE notice that the abovenamed insolvent has applied to the Court for his discharge and that the Court has fixed the 30th July 1923 for hearing the application.

J. F GRAHAM, District Judge

Dacca, the 28th June 1923. (1239—1)

---

**In the Court of the District Judge of Faridpur.**

INSOLVENCY CASE No 14 OF 1923

TAKE notice that Sadhan Bairagi, of Charshyampur, police-station Sadarpur, in the district of Faridpur, is adjudicated an insolvent on the 28th June 1923

Dated the 30th June 1923

R L SADHU, District Judge

(1257—1)

---

**In the Court of the District Judge of Faridpur.**

INSOLVENCY CASE No 3 OF 1920

TAKE notice that the adjudication order of Ram Chandra Sikdar, of Amirabad, police-station Sadarpur, district Faridpur, has been annulled on the 28th June 1923

R L SADHU, District Judge.

Faridpur, the 2nd July 1923. (1271—1)

---

**In the Court of the District Judge of Faridpur.**

INSOLVENCY CASES Nos 6 AND 7 OF 1920

TAKE notice that the adjudication orders of Fatik Chandra and Kailash Pramanik, of Amirabad, police-station Sadarpur, in the district of Faridpur, have been annulled on the 28th June 1923

R L SADHU, District Judge.

Faridpur, the 2nd July 1923 (1272—1)

---

**In the Court of the District Judge of Hooghly.**

NOTICE is hereby given, under clause (2) of section 12 of the Provincial Insolvency Act, V of 1920, to his creditors that the insolvency petition of Jitendranath Nandi, son of late Dwarikanath Nandi, of Jamgram, thana Pandua, district Hooghly, has been admitted by this Court as No 28 of 1923 and that 14th July 1923 has been fixed for the hearing thereof.

H. C. LIDDELL, District Judge.

Chinsura, the 21st June 1923 (1208—1—1209)

**In the Court of the District Judge of Nadia.**

INSOLVENCY CASE No 27 OF 1923

Petitioner Ijjatali Sheik, son of late Umedali Sheik, of Ghurni, police-station Kotwali, district Nadia.

NOTICE is hereby given, under clause (2) of section 19 of the Provincial Insolvency Act, V of 1920, to his creditors that the abovenamed petitioner has filed an insolvency petition and that 28th July 1923 has been fixed for the hearing thereof

B. G CHATTARJI, District Judge.

Krishnagar, the 3rd July 1923 (1273—1)

---

**In the Court of the District Judge of Rajshahi.**

INSOLVENCY CASE No 61 OF 1922.

NOTICE is hereby given that Gagan Mondal, of Gangair, police-station Niamatpur, district Rajshahi, has been adjudicated by this Court on the 24th day of March 1923.

B K. BASU, District Judge.

Rajshahi, the 11th June 1923 (1140—1—1301)

---

**In the Court of the District Judge of Rajshahi.**

INSOLVENCY CASES Nos. 71 & 72 OF 1922.

NOTICE is hereby given that (1) Fulmon Bibi, (2) Mariam Bewa, of Damol, police-station Gomastapur, district Malda, have been adjudicated insolvents by this court on the 8th day of March 1923.

S BANARJI, *for* District Judge.

Rajshahi, the 29th June 1923. (1241—1—1334)

---

NOTICE

**In the Court of the District Judge of Rangpur.**

INSOLVENCY CASE No. 7 OF 1923.

PRESENT:

P. K Mukherjee, Esq, District Judge.

SHITAL CHANDRA SHIL, son of late Uddhab Chandra Shil, of Kabirarbhita, police-station Nageswari, in the district of Rangpur, was, on the 28th June 1923, adjudged an insolvent by this Court He will apply for his final discharge within six months

P. K. MUKHERJEE, District Judge

Rangpur, the 29th June 1923 (1238—1)

---

**In the Court of the District Judge of Tippera.**

INSOLVENCY CASE No 7 OF 1923

NOTICE is hereby given under clause (2) of section IXX of the Provincial Insolvency Act, V of 1920, to the creditors that the insolvency petition of Wajuddi, son of deceased Patta Gaji, of village Najar Doulat, pargana Bardakhat, police-station Nabinagar, district Tippera, has been admitted by this Court as No. 7 of 1923, and that the 30th July 1923 has been fixed for hearing.

H. C. STORK, District Judge.

Comilla, the 28th June 1923 (1218—1)

NOTICE.

**In the 4th Court of the Sub-Judge of 24-Parganas.**

INSOLVENCY CASE No 68 OF 1923.

R. A. Purcell, residing at Ichapore Park, Ichapore, 24-Parganas, applicant.

To Rafo Khan Kabuli, of 12, Pipe Road, Kidderpore, 24-Parganas, and others, creditors.

ON the 14th day of April 1923 it was ordered that the matter of the petition of the applicant be heard on the 16th July 1923 and that the said applicant do attend to be examined by this Court on that date

A T. PAL, Sub-Judge.

Alipore, the 30th May 1913. (1052—1—1345)

NOTICE.

**In the 4th Court of the Sub-Judge of 24-Parganas.**

INSOLVENCY CASE No 78 OF 1923.

Panchoo Shaikh, of Jagaddal, thana Jagaddal, 24 Parganas, applicant

To Amir Khan, of Garifa, 24-Parganas, and others, creditors

ON the 17th day of April 1923 it was ordered that the matter of the petition of the applicant be heard on the 16th July 1923 and that the said applicant do attend to be examined by this Court on that date.

A. T PAL, Sub-Judge

Alipore, the 30th May 1923 (1053—1—1346)

NOTICE

**In the 4th Court of the Sub-Judge of 24-Parganas.**

INSOLVENCY CASE No 82 OF 1923.

Gangadhar Bag, of Bishpur, thana Hasnabad, 24-Parganas, applicant

To Krishna Mohan Jana, of Bishpur, thana Hasnabad, 24-Parganas, and others, creditors.

ON the 11th day of April 1923 it was ordered that the matter of the petition of the applicant be heard on the 16th July 1923 and that the said applicant do attend to be examined by this Court on that date

A. T. PAL, Sub-Judge.

Alipore, the 30th May 1923. (1054—1—1347)

NOTICE

**In the 4th Court of the Sub-Judge of 24-Parganas.**

INSOLVENCY CASE No 84 OF 1923.

Ramdas Kalwor, of Titagarh, thana Titagarh, 24-Parganas, applicant.

To Nripendra Nath Banarji, of Sukchar, thana Khordah, 24-Parganas, creditor.

ON the 16th day of April 1923 it was ordered that the matter of the petition of the applicant be heard on the 16th July 1923 and that the said applicant do attend to be examined by this Court on that date

A. T. PAL, Sub-Judge.

Alipore, the 30th May 1923. (1055—1—1348)

NOTICE.

**In the 4th Court of the Sub-Judge of 24-Parganas.**

INSOLVENCY CASE No 86 OF 1923

Billi Sha, residing at Chetla, thana Alipore, 24-Parganas, applicant

To Gangadhor Sha, of Keddirpur Orphangan, 24 Parganas, and others, creditors

ON the 12th day of April 1923 it was ordered that the matter of the petition applicant be heard on the 16th July 1923 and that the said applicant do attend to be examined by this Court on that date.

A T. PAL, Sub-Judge.

Alipore, the 30th May 1923. (1056—1—1349)

NOTICE.

**In the 4th Court of the Sub-Judge of 24-Parganas.**

INSOLVENCY CASE No 93 OF 1923

Amir Ali Chedi, of 220, Dharbagan, thana Beleghatta, 24-Parganas, applicant.

To Sewprosad Mitharwala, of Bistupur Bazar, thana Jamsedpur, Tatanagore, creditor

ON the 17th day of April 1923 it was ordered that the matter of the petition of the applicant be heard on the 16th July 1923 and that the said applicant do attend to be examined by this Court on that date.

A. T PAL, Sub-Judge.

Alipore, the 30th May 1923 (1057—1—1350)

NOTICE

**In the 4th Court of the Sub-Judge of 24-Parganas.**

INSOLVENCY CASE No 94 OF 1923.

Ram Logan Gowala, of 13, Tantibagan Road, thana Beniapukur, 24 Parganas, applicant

To Ram Devi Tewari, of 70, Corporation Street, Calcutta, and others, creditors.

ON the 18th day of April 1923 it was ordered that the matter of the petition of the applicant be heard on the 23rd July 1923 and that the said applicant do attend to be examined by this Court on that date

A. T. PAL, Sub-Judge.

Alipore, the 30th May 1923. (1058—1—1351)

ORDER OF ADJUDICATION.

[*Section 16 of the Provincial Insolvency Act, III of 1907.*]

**In the Court of the District Judge at Alipore, 24-Parganas.**

MISCELLANEOUS JUDICIAL APPLICATION No. 86 OF 1922.

PURSUANT to a petition, dated 11th August 1922 as amended by a subsequent petition, dated 15th February 1923, filed by insolvents Rajnarayan Pakhira Ramk Lal Pakhira, a firm carrying on business in partnership at Shahapur, police station Behala in the district of 24-Parganas, and on the application of the said insolvents and on reading their petition and hearing their pleader it is ordered that the debtors be and the said debtors are hereby adjudged insolvents and the petitioners must apply for discharge within one year

Dated this 18th day of June 1923.

G. N. ROY, District Judge.

(1162—1—1277)

ORDER OF ADJUDICATION.

[*Section 16 of the Provincial Insolvency Act, III of 1907.*]

**In the Court of the District Judge at Alipore, 24-Parganas.**

INSOLVENCY APPLICATION No. 8 OF 1923.

PURSUANT to a petition, dated 27th February 1923, filed by Amirali Mistry, son of Maslan Mia, of 109 Russa Road, Bhowanipur, and on the application of the said insolvent and on reading his petition and hearing his pleader it is ordered that the debtor be and the said debtor is hereby adjudged insolvent and he will apply for discharge within a year

Dated this 19th day of June 1923.

G. N. ROY, District Judge.

(1204—1—1332)

ORDER OF ADJUDICATION.

[*Section 16 of the Provincial Insolvency Act, III of 1907*]

**In the Court of the District Judge at Alipore, 24-Parganas.**

INSOLVENCY APPLICATION No. 45 OF 1922.

PURSUANT to a petition, dated 21st December 1922, filed by Abdur Rahman Mistry, son of Amirali Mistry, of 109, Russa Road, Bhowanipur, and on the application of the said insolvent and on reading his petition and hearing his pleader it is ordered that the debtor be and the said debtor is hereby adjudged insolvent and he will apply for discharge within a year

Dated this 19th day of June 1923

G N ROY, District Judge

(1205—1—1333)

NOTICE.

**In the Court of the District Judge of 24-Parganas.**

INSOLVENCY CASE No. 17 OF 1923.

Bhagabania Dei, widow of Bhikhu Lal Halooai, residing at 144, Munshiganj, Khidderpur, applicant,

To Ram Narain Dass and others, creditors.

ON the 20th day of June 1923 it was ordered that the matter of the petition of the applicant be heard on the 23rd day of July 1923 and that the said applicant do attend to be examined by this Court on that date

G. N. ROY, District Judge

Alipore, the 22nd June 1923 (1203—1—1331))

LT BEJOY PROSAD SINGH ROY intends to be enrolled as a Vakil of the High Court, Calcutta.

(1123—4—1217)

PROVAT KUMAR SEN, B.L., intends to be enrolled as a Vakil of the High Court, Calcutta.

(1209—4—1278)

SATYENDRANATH BANERJEE intends to be enrolled as a Vakil of the High Court, Calcutta.

(1122—4—1216)

WANTED candidates for admission into the Amin class of the B G Technical School, Rangpur Students passing the M E. or M. V. examinations and the annual examinations for promotion to class VII (4th class) of H. E. schools, above 16 years old, are qualified for admission, but preference will be given to students of higher classes of H. E. schools and specially passed and plucked Matriculates.

There are two scholarships of Rs 10 each a month tenable for one year for the two best boys of this class. Session commences from July There is a Hindu hostel attached to the school Mahammadan boys may put up at the Hare Moslem Hostel, Rangpur.

Apply for rules with half anna postage stamps.

SIDDHESWAR SHAHA, Superintendent,

B G. Technical School, Rangpur.

Rangpur, the 5th June 1923.

**Howrah Municipality.**

APPLICATIONS with copies of testimonials are invited for the post of an Assistant Accountant on a graded pay of Rs. 90—6—120 per month and will be received by the Secretary up till 3 P.M of the 21st July 1923

Candidates should state—

(*a*) Age,
(*b*) Educational qualifications,
(*c*) Present employment, if any, or past experience,
(*d*) Whether related to a Municipal Commissioner of Howrah

None need apply who has not passed the Accountantship Examination of Public Works Department and has no experience in municipal account

The successful candidate will have to deposit a security of Rs. 1,000 either in cash or in 6 per cent Government Promissory Notes and will be required to execute a security bond.

Personal application to the Chairman, Vice-Chairman, Deputy Chairman or the Secretary, unless called for, will disqualify the applicant.

J. N MITRA, Deputy Chairman.

Howrah, the 4th July 1923. (1286—1)

**Government of Bengal.**

**PUBLIC HEALTH DEPARTMENT.**

**Engineering Branch.**

NOTICE.

THE offices of the Chief and Executive Engineers, Public Health Department, and the Sanitary Board will be removed to No. 3, Charnock Place, on Friday, the 22nd June 1923.

G. B. WILLIAMS, Chief Engineer,

Public Health Department, Bengal

**APPENDIX A (FORM B).**

**Abstract of the Estates Partition Fund of the Dacca District for the year 1922-23 prepared as required by section 42, Act V (B. C.) of 1897.**

| | | Rs. | A. | P. |
|---|---|---|---|---|
| Balance at credit of the Fund on 1st April 1922 | ... | 23,510 | 1 | 9 |
| Receipt for the year 1922-23 | ... | 19,891 | 5 | 3 |
| Disbursement during the year 1922-23 | | 12,825 | 7 | 3 |
| Balance at credit on 31st March 1923 | | 30,575 | 15 | 9 |

J. G. DRUMMOND, Collector.

Dacca, the 20th June 1923. (1236—1)

### Notice.

THE Bengal and Madras Service Family Pension Fund which is provisionally managed and assisted by Government has for its object the provision of monthly pensions for the maintenance of the widows and children of subscribers and is open, with certain exceptions, to all active and pensioned members of the Uncovenanted Service of Government (except those serving under the Government of Bombay), and to Local Fund servants earning pensions from Government. Some of the special features of the fund are—(1) that widowed daughters incapable of remarriage or children labouring under such mental or bodily infirmities as incapacitate them from earning their livelihood or preclude the possibility of marriage (in case of a daughter) are admitted to its benefits; and (2) that subscribers to the Widows' and Daughters' branches are entitled to a refund of 30 per cent. of the premia paid, should the nominees predecease them after five years of admission. The second quinquennial valuation of the fund has been completed by the Actuary to the Government of India and his report discloses very favourable results For forms of application and rules of the Fund apply to the Accountant-General, Central Revenues, Imperial Secretariat Buildings, Calcutta.

---

### The Commissioners for the Port of Calcutta.

NOTIFICATION No. 43

THE following scale of charges framed under the provisions of section 105 of the Calcutta Port Act, III (B C.) of 1890, and approved by the Local Government, as required by section 107 of the same Act, is hereby notified for general information. The charge has effect from the 1st August 1921 —

Haulage of stock of Eastern Bengal and Bengal-Nagpur Railways over the Port Commissioners' lines between East Dock Junction and the transfer sidings at West Dock Junction and *vice versa*, 10 annas per wagon

By order of the Commissioners,

W J Good, Secretary (offg )

Calcutta, the 5th July 1923 (1285—1)

---

### Custom House Notice.

NOTICE is hereby given that if the duty, interest, warehouse rent and all charges be not paid within ten days from the date of this notice on one package of Brandy marked K B. S & S. *ex* SS. "Warfield" bonded by K. B. Singha and Sons in 7, Radha Bazar Lane, the goods will be sold by public auction under the provisions of the section 119 of the Sea Customs Act.

W. W. Nind, Collector of Customs.

The 2nd July 1923. (1270—2)

---

### Custom House Notice.

NOTICE is hereby given that if the duty interest, warehouse rent, and all charges be not paid within ten days from the date of this notice on 25 packages of whisky marked K. B. S *ex* SS "Malbar" from bonded by The Mercantile, 1 25, Bank of India, Limited, in the Bengal Bonded Warehouse Association, the goods will be sold by public auction under the provisions of the section 119 of the Sea Customs Act.

W. W. Nind, Collector of Customs.

(1282 —2 )

### Custom House Notice.

NOTICE is hereby given that, if the duty interest, warehouse rent and all charges be not paid within ten days from the date of this notice on 13 packages of whisky marked Framjee *ex.* SS. "Clan Robertson", from Glasgow, bonded by Framjee & Sons, in the Private Warehouse No 11, Bentinck Street, the goods will be sold by public auction under the provisions of the section 119 of the Sea Customs Act

W W Nind, Collector of Customs.

Calcutta, the 6th July 1923. (1293—2)

---

### Lost.

THE Government Promissory notes Nos 090611 and 090612 of the 3½ per cent. loan of 1900-01 for Rs 1,000 each, originally standing in the name of Hara Sundari Debi, the proprietress, by whom they were never endorsed to any other person, having been lost, notice is hereby given that payment of the above notes and the interest thereupon have been stopped at the Public Debt Office, Imperial Bank of India, Calcutta, and that application is about to be made for the issue of duplicates in favour of the proprietress. The public are cautioned against purchasing or otherwise dealing with the abovementioned securities

Mahesh Chandra Lahiri,
Sarat Chandra Lahiri,
(Successors in the Estate of late Hara Sundari Debi.)

Address—Village and post office Bhandarpur, police-station Badalgachi, district Rajshahi

(850—3—1303)

---

### Stolen.

THE Government Promissory Notes Nos 123482, 131911, 122395, 140123 and 147734 of the 3½ per cent loan of 1854-55 for Rs 1 000 each, originally standing in the name of the Ram Lall Sadhukhan, the proprietor, by whom they were never endorsed to any other person having been stolen notice is hereby given that payment of the above notes, and the interest thereupon have been stopped at the Public Debt Office, Imperial Bank of India, Calcutta, and that application is about to be made for the issue of duplicates in favour of Kanai Lall Pramanik, Amirta Lall Pramanik and Sambhu Nath Pramanik The public are cautioned against purchasing or otherwise dealing with the above-mentioned securities.

Name of the Advertiser—Sambhu Nath Pramanik
Residence—No 11, Grey Street, Calcutta

(1027—3—1304)

---

### In the matter of the Indian Companies Act, VII of 1913, and

### In the matter of the Eastern Machinery and Engineering Company, Limited.

NOTICE is hereby given that a petition for the winding up of the abovenamed Company by the High Court of Judicature at Fort William in Bengal was on the 22nd day of June 1923 presented before the Honourable Mr. Justice Greaves in Chambers by C. W. Metcalfe of 19-1, Convent Road, Entally, in the town of Calcutta, a creditor of the said Company And that the said petition is directed to be heard before the Honourable Mr. Justice Greaves on the 23rd day of July 1923, and any creditor or contributory of the said Company desirous to oppose the making of an order for the winding up of the said Company under the above Act should appear at the time of hearing by himself or by counsel for that purpose; and a copy of the petition will be furnished to any creditor or contributory of the said Company requiring the same by the undersigned on payment of the regulated charge for the same

Morgan & Co.,
Attorneys for the petitioners.

1, Hastings Street, Calcutta, the 27th June 1923.

(1219—1—1300)

IN THE HIGH COURT OF JUDICATURE AT FORT WILLIAM IN BENGAL.

(ORDINARY ORIGINAL CIVIL JURISDICTION.)

**In the matter of the Indian Companies Act, VII of 1913, and**

**In the matter of Furkating Saw Mills, Ltd.**

NOTICE is hereby given that a petition for winding up of the abovenamed Company by the High Court of Judicature at Fort William in Bengal was, on the 29th day of June 1923, presented to the said Court by Messrs. Henry F Elliot (India), Ltd, Managing Agents and creditors of the said Company, and that the said petition is directed to be heard before the Judge sitting in Chambers on the 23rd day of July 1923 and any creditor or contributory of the said Company desirous to oppose the making of an order for the winding up of the said Company under the above Act should appear at the time of hearing either in person or through his counsel for the purpose.

A copy of the petition will be furnished to any creditor or contributory of the said Company requiring the same by the undersigned on payment of the regulated charge for the same.

LESLIE & HINDS, Attorneys for the applicants

6, Hastings Street, Calcutta, the 29th day of June 1923. (1235—1—1344).

---

**In the matter of the Indian Companies Act, 1913, and**

**In the matter of DePenning Brothers, Limited (in liquidation).**

PROCEEDINGS of an extraordinary meeting of the shareholders held at the registered office of the Company, 28, Ezra Mansions, 10, Government Place, East, Calcutta, on Friday, the 22nd day of June 1923.

PRESENT :

H. A. DePenning, Esq
L. A. DePenning, Esq
V E. DePenning, Esq
Mrs DePenning, by her proxy, H DePenning, Esq.

H A DePenning, Esq, voted to the chair.

The notice convening the meeting having been read the following resolution was placed before the meeting —

"That the Company by reason of its liabilities cannot continue its business and that it is advisable that the Company be hereby wound up voluntarily and that J. M. Mukerjee, Esq, Vakil, High Court, Calcutta, be appointed Liquidator for the purpose of winding up the same on a remuneration of Rs 100"

The resolution was carried unanimously.

H A. DEPENNING, Chairman.

Calcutta, the 29th June 1923. (1222—1—1305)

---

NOTICE.

**In the matter of the Indian Companies Act, 1913, and**

**In the matter of DePenning Brothers, Limited (in Liquidation).**

NOTICE is hereby given, pursuant to section 209 of the Indian Companies Act, 1913, that a meeting of the creditors of the abovenamed Company will be held at 6, Hastings Street, Calcutta, on Saturday, the 21st day of July 1923, at 12 noon.

J. M. MUKERJEE, Liquidator.

Calcutta, the 29th June 1923.

(1231—1—1306)

---

**In the matter of the Indian Companies Act, 1913, and**

**In the matter of the Chulsa (Selangor) Rubber Company, Limited (in liquidation).**

AT an extraordinary general meeting of the abovenamed Company duly convened and held on Friday, the 1st day of June 1923, the following resolution was duly passed and at a subsequent extraordinary general meeting of the said Company, also duly convened and held on Friday, the 29th day of June 1923, the same resolution was duly confirmed as a special resolution, viz —

"That it is desirable to wind up the Company and accordingly that the Company be wound up voluntarily and that Leonard Hamfhond Blick and Edward Sayer Stewart, both of No. 11, Clive Street, Calcutta, be and they are hereby appointed Liquidators for the purpose of such winding up with joint and several powers at a fixed remuneration of Rs. 3,000"

G L SCOTT, Chairman.

11, Clive Street, Calcutta, the 30th June 1923.

(1277—1—1338)

---

**In the matter of the Indian Companies Act, VII of 1913, and**

**In the matter of the Chulsa (Selangor) Rubber Company, Limited (in liquidation.)**

NOTICE is hereby given that the creditors of the abovenamed Company, which is being wound up voluntarily, are required on or before the 20th day of July 1923, being the day fixed for that purpose by the undersigned, to send their names and addresses and of their Solicitors (if any) to the undersigned the Liquidator of the said Company at 11, Clive Street, Calcutta, and, if so required by notice in writing from me, are by their Solicitors to come in and prove their said debts and claims at such time and place as shall be specified in such notice, or in default they will be excluded from the benefit of any distribution made before such debts are proved

L. H BLICK, *for* Self and Co-Liquidator.

11, Clive Street, Calcutta, this 30th day of June 1923.

(1278—1—1339)

---

**In the matter of the Indian Companies Act, VII of 1913, and**

**In the matter of the Chulsa (Selangor) Rubber Company, Limited (in liquidation).**

NOTICE is hereby given under section 209 of the Indian Companies Act, 1913, that the first meeting of the creditors of the abovenamed Company will be held at 11, Clive Street, Calcutta, on Friday, the 27th day of July 1923, at 3 o'clock in the afternoon.

L. H. BLICK, *for* Self and Co-Liquidator.

11, Clive Street, Calcutta, this 30th day of June 1923

(1279—1—1340)

---

**In the matter of the Indian Companies Act, VII of 1913, and**

**In the matter of the Agarkoond Coal Company, Limited (in liquidation).**

NOTICE is hereby given pursuant to section 209 of the Indian Companies Act, 1913, that a meeting of the creditors of the abovenamed Company will be held at 25, Mangoe Lane, Calcutta, on Monday, the 23rd July 1923, at 5 P.M.

KENNETH B. DUNLOP, *for* Self and Co-Liquidators

Calcutta, the 6th July 1923. (1289—1—1341)

**In the matter of the Indian Companies Act, 1913, and**

**In the matter of the Agarkoond Coal Company, Limited (in liquidation).**

NOTICE is hereby given that at an extraordinary general meeting of the members of the abovenamed Company duly convened and held at Nos. 1 and 2, Hare Street, in the town of Calcutta, on the 29th day of June 1923, the resolution below mentioned was passed as an extraordinary resolution :—

"That it has been proved to the satisfaction of this meeting that the Company cannot by reason of its liabilities continue its business and that it is advisable to wind up the same and accordingly that the Company be wound up voluntarily and that Messrs Dugald McKechnie, Charles Ernest Walker, Kenneth Blair Dunlop, Joseph Benjamin Stanley of Messrs. Lovelock and Lewes be and they are hereby appointed liquidators jointly and severally for the purpose of such winding up on the remuneration at their usual scale of fees."

KENNETH B DUNLOP, *for* self and Co-Liquidators

25, Mangoe Lane, Calcutta, the 6th July 1923

(1290—1—1342)

**In the matter of the Indian Companies Act, 1913, and**

**In the matter of the Burma Valley Saw Mills, Limited (in liquidation).**

NOTICE is hereby given pursuant to section 209 of the Indian Companies Act, 1913, that a meeting of the creditors of the abovenamed Company will be held at 25, Mangoe Lane, Calcutta, on Monday, the 30th July 1923, at 5 P M

KENNETH B DUNLOP, *For* Self and Co Liquidators.

25, Mangoe Lane, Calcutta, the 6th July 1923

(1291—1—1343)

**Descriptive Catalogue of Sanskrit Manuscripts.**

**PARTS I, II, and III of a Descriptive Catalogue** of the Sanskrit Manuscripts in the Library of the Calcutta Sanskrit College, prepared by Pandit Hrishikesh Sastri and Babu Siva Chandra Gui, M A., B.L., of that College, are offered to the public for sale The Catalogue having to be completed in 23 parts the price of each part is 12 annas a copy exclusive of postage Copies can be obtained from the Principal of the Sanskrit College, Calcutta.

## Post Office.

### Despatch of Sea-borne Mails.

| MAILS FOR— | Day or date of closing of mails | LATEST HOURS OF POSTING AT THE G. P O | | | |
|---|---|---|---|---|---|
| | | UNREGISTERED LETTERS AND PACKETS | | REGISTERED LETTERS AND PACKETS. | |
| | | Without late fee | With late fee * | Without late fee | With late fee * |
| | | P M | P M | P M | P M |
| United Kingdom, Europe, Aden, Egypt, East and West Africa and America .. ... | Thursday | 5 45 | 6 15 | 4 45 | 5-15 |
| Ceylon ... ... ... ... | Daily .. | 4 15 | 4 45 | 3 15 | 3-45 |
| † Australia and New Zealand (*vid* Colombo) .. | July 11 . | 4 15 | 4 45 | 3 15 | 3-45 |
| Straits Settlements, French Indo-China, Federated Malay States, Philippine Islands, Netherlands-India Siam, China and Japan per SS "Janus" ... | " 10 . | 7 30 | 8 0 | 5 0 | 6-0 |
| Burma ... ... ... ... | " 9 ... | 7-30 | 8 0 | 5-0 | 6-0 |
| Port Blair (*vid* Rangoon) ... ... .. | " 14 ... | 7-30 | 8 0 | 3 0 | 5-0 |
| † South Africa per SS "Maindy Manor" from Colombo. | " 10 ... | 4 15 | 4-45 | 3-15 | 3-45 |

NOTE —The latest date and hour for booking Money Orders and Parcels for despatch by the Homeward English mail is Wednesday, 3 P.M., and Thursday noon respectively.

* The late fee is 4 annas for each registered or unregistered article of the Letter Mail to any place in the countries named above except for Aden, Burma, Ceylon and Port Blair, the late fee for which is ½ anna for unregistered articles and 2 annas for registered articles. Letters are accepted with late fee only on occasions when a direct mail is closed by the Calcutta G P O for Foreign countries

† When there is no direct mail from Calcutta, correspondence for South Africa and Mauritius posted up to 5-15 P M in the Calcutta G. P O. is despatched to Bombay and correspondence for Australia, New Zealand and Japan posted up to 4-15 P M., to Colombo for transmission by the first available steamer.

Calcutta, G. P. O., the 7th July 1923.

H. M RICHARDSON, Presidency Postmaster

## CINCHONA FACTORY PRODUCTS.

BY order of the Government of Bengal Cinchona Factory Products will be sold by the **Superintendent, Juvenile Jail, Alipore,** at the undernoted rates from the 1st June 1923 :—

### Quinine Sulphate.

| | |
|---|---|
| For 60 lbs and above in one delivery ... ... ... ... | Rs. 27 per lb. |
| For 6 lbs and over but less than 60 lbs. in one delivery ... ... ... | " 28 " |
| For any quantity less than 6 lbs. ... ... .. ... ... | " 29 " |

### Quinine Hydrochloride.

| | |
|---|---|
| For 60 lbs and above in one delivery . ... ... ... | Rs 35 per lb. |
| For 6 lbs and over but less than 60 lbs in one delivery .. ... ... | " 36 " |
| For any quantity less than 6 lbs. ... ... ... ... .. | " 37 " |

### Quinine Di-Hydrochloride.

| | |
|---|---|
| For 60 lbs. and above in one delivery ... ... .. ... | Rs 38 per lb. |
| For 6 lbs and over but less than 60 lbs in one delivery ... ... ... | " 39 " |
| For any quantity less than 6 lbs ... ... ... ... ... | " 40 " |

### Cinchonidine Sulphate and Cinchonine Sulphate.

| | |
|---|---|
| For not less than 6 lbs in one delivery ... ... ... ... | Rs. 12 per lb. |
| For any quantity less than 6 lbs. ... ... ... ... ... | " 13 " |

### Cinchona Febrifuge Powder.

| | |
|---|---|
| For not less than 6 lbs in one delivery ... ... ... ... | Rs. 8 per lb. |
| For any quantity less than 6 lbs ... ... ... ... ... | " 9 " |

### Cinchona Febrifuge Tablets.

| | |
|---|---|
| For not less than 6 lbs in one delivery ... ... ... ... | Rs. 9 per lb. |
| For any quantity less than 6 lbs. ... ... ... ... ... | " 10 " |

### Quinoidine Tablets.

| | |
|---|---|
| For not less than 6 lbs in one delivery ... ... ... ... | Rs 7 per lb. |
| For any quantity less than 6 lbs. ... ... ... ... ... | " 8 " |

### Quinoidine (in Mass).

| | |
|---|---|
| For not less than 6 lbs. in one delivery ... ... ... ... | Rs 6 per lb. |
| For any quantity less than 6 lbs ... ... ... ... ... | " 7 " |

### Quinidine Sulphate.

| | |
|---|---|
| For any quantity less than 6 lbs .. ... ... ... ... | Rs. 39 per lb |

**Quinine Sulphate** is for sale to Government Institutions and Missionaries only. It is not for sale to Private Firms or the General Public.

**Cinchona Febrifuge** in Powder and Tablet form (when in stock) is for sale to Government Institutions, Missionaries and the General Public.

Quinine Sulphate will be supplied to Hospitals and Dispensaries of this Presidency only at the wholesale rate of Rs. 27 per lb., irrespective of quantities. For all other purchasers the rates given above will apply.

*Transit charges extra in every case.*

The system of payment is by—*Cash in advance*—by "*Treasury Chalans*" which should accompany the order or indent.

In cases where this is not possible, payment should be made by "*Remittance Transfer Receipts*" or crossed "*Cheques.*"

Indents unaccompanied by Cash in advance will be sent Value Payable Post.

In the case of *Government Officers* payments will be recovered by *Book Transfer* or *Countersigned Invoices* in the event of *Cash* not accompanying the Indent by "*Treasury Chalans.*" *R. T. R.*, or *Cheque.*

2. Price and postage must accompany the price of the drug (when the drug is required by post).

3 The name of the Railway and Steamer Station or Post-Office must be written distinctly when the parcels are required by Rail, Steamer or by Post

4 A scale of postage is given below —

For ¼ lb. 4 annas, ½ lb 5 annas, 1 lb 8 annas, 1½ lbs 11 annas, 2 lbs 14 annas, 2½ lbs. Re. 1-1, 3 lbs Re 1-1, 3½ lbs Re. 1-4, 4 lbs Re 1-7, 4½ lbs. Re 1-13, 5lbs. Re 1-13, 6 lbs Rs. 2.

Local sale at the Jail gate from 7 to 10 A.M., and 2 to 4 P.M

*N.B*—Postage stamps are not accepted as revenue.

**Government reserve the right to alter the price without notice.**

## NOTICE.

Advertisements, Notices, etc., intended for insertion in this Part of the Gazette cannot be received after noon on Saturday.

REGISTERED No. C207. No. 28 of 1923.

# The Calcutta Gazette

WEDNESDAY, JULY 11, 1923.

## SUPPLEMENT.

### *Official Papers.*

[*Non Subscribers to the* GAZETTE *may receive* SUPPLEMENT *separately on payment of five rupees per annum if delivered in Calcutta, or seven rupees and eight annas if sent by post*]

CONTENTS


| | Page. |
|---|---|
| Approximate return of traffic on the Circular and Eastern Canals for the week ending Saturday, the 30th June 1923 .. ... . . | 829 |
| Statement showing the daily gauge readings of certain rivers for the week ending 5th July 1923 | 830—836 |
| Weather and Crop Report for the week ending on the 4th July 1923 . . | 837—840 |
| Local areas referred to in notification No. 1897L.S.G., dated the 25th June 1923 | 841—847 |
| Statement of weekly gauge readings on the rivers in Bengal | 848—849 |
| Statement showing heights over mean sea level and low water in the rivers for the month of April 1923 | 850—851 |
| Statement showing the quantity of salt during the half month from the 16th to 30th June 1923 | 852 |


## GOVERNMENT OF BENGAL, IRRIGATION DEPARTMENT.

***Approximate return of traffic on the Circular and Eastern Canals for the week ending Saturday, the 30th June 1923, as compared with the corresponding week of the previous year.***

| Nature of cargo. | Week ending Saturday, the 30th June 1923. | | | Week ending Saturday, the 1st July 1922 | | |
|---|---|---|---|---|---|---|
| | Number of boats | Weight of cargo | Tollage | Number of boats | Weight of cargo | Tollage |
| | | Mds | Rs | | Mds | Rs. |
| Rice and paddy ... ... | 228 | 59,820 | 849 | 216 | 40,980 | 618 |
| Jute ... ... ... | 24 | 26,100* | 231 | 66 | 53,650† | 464 |
| Firewood ... ... | 50 | 29,325 | 443 | 64 | 35,500 | 599 |
| Other articles ... ... | 931 | 332,600 | 3,636 | 1,141 | 313,995 | 3,089 |
| Total ... | 1,233 | 447,845 | 5,159 | 1,487 | 444,125 | 4,770 |
| Empty boats and rafts ... | 419 | ... | 1,581 | 337 | ... | 953 |
| GRAND-TOTAL ... | 1,652 | 447,845 | 6,740 | 1,824 | 444,125 | 5,723 |

| | Mds |
|---|---|
| * Weight by canal measurement .. | 30,904 |
| † Ditto ditto . | 55,450 |

*N.B.*—It is intended to discontinue publishing this information unless some one protests, from 1st August 1923.

T. C. BHATTACHARYA,
*Assistant Secretary to the Government of Bengal.*

CALCUTTA, *the 7th July 1923.*

**Statement showing the daily gauge readings of certain rivers at the stations named below for the week ending Thursday, the 5th July 1923.**

| Name of river and place where readings are taken. | | Date. | Hour | Reading on gauge | Value of zero referred to P. W D datum. | Height above P. W D. datum | Compared with previous day's height | | Height above P W D datum on same date in— | | Remarks. |
|---|---|---|---|---|---|---|---|---|---|---|---|
| | | | | | | | Rise. | Fall. | 1922. | 1921. | |
| Ganges ... | Monghyr ... | 29th June 1923 | 6 A.M. ... | 105·10′ | 0·00′ | 105·10′ | 0·10′ | ... | 109 50′ | 100·90′ | |
| | Rajmahal ... | 29th „ „ | 6 „ ... | ... | 56·319′ | ... | ... | ... | 70·019′ | 67·719′ | |
| | Goalundo ... | 29th „ „ | 8 hours ... | 20·00′ | 4 896′ | 24·896′ | Steady | | 23·296′ | 24 496′ | |
| Brahmaputra ... | Gauhati ... | 29th „ „ | 8 A.M. ... | 17·70′ | 135·18′ | 152·88′ | 0·20′ | ... | 160·78′ | 157·08′ | |
| | Serajganj ... | 29th „ „ | 12 hours ... | 35·00′ | 1·509′ | 36 509′ | 0·05′ | ... | 38·409′ | 39·409 | |
| | Dibrugarh ... | 29th „ „ | 9 A.M. ... | 19·50′ | 314·18′ | 333·68′ | 1·20′ | ... | 336·68′ | 330·68′ | |
| Meghna ... | Bhairab Bazar | 29th „ „ | 6 hours ... | 17·00′ | 1·61′ | 18·61′ | 0·33′ | ... | 15·19′ | ... | |
| | Chandpur ... | 29th „ „ | 5-30 „ ... | 11·33′ | 1·61′ | 12·94′ | 0·08′ | ... | 12·36′ | 11·53′ | |
| | Fenchuganj ... | 29th „ „ | 7 „ ... | 31·50′ | 1 509′ | 33 009′ | ... | 0·20′ | 26·809′ | 30·759′ | |
| Dhaleswari ... | Sabhar ... | 29th „ „ | 6 A.M. ... | 24·80′ | – 8·62′ | 16·18′ | ... | 0·20′ | 15 48′ | 15·68′ | |
| Bhagirathi ... | Swarupganj ... | 29th „ „ | 6 „ ... | 5·74′ | 1·509 | 7·249′ | 0·89′ | ... | 18·129′ | 9·529′ | |
| Damodar ... | Edilpur ... | 29th „ „ | 6 „ ... | 7·00′ | 92·58′ | 99·58′ | 0 87′ | ... | 104·41′ | 102·08′ | |
| Lakhya ... | Narayanganj | 29th „ „ | 8 „ ... | 20·62′ | – 5 59′ | 15 03′ | 0·04′ | ... | 14·28′ | 14·24′ | |
| Madaripur Bil Route | Takerhat ... | 20th „ „ | 6 „ ... | 89·50′ | – 0 599′ | 88·901′ | 0·20′ | ... | 9·001′ | 9·201′ | |

**Statement showing the daily gauge readings of certain rivers at the stations named below for the week ending Thursday, the 5th July 1923.**

| Name of river and place where readings are taken | | Date. | Hour | Reading on gauge. | Value of zero referred to P. W. D. datum. | Height above P. W. D. datum | Compared with previous day's height | | Height above P. W. D. datum on same date in— | | Remarks. |
|---|---|---|---|---|---|---|---|---|---|---|---|
| | | | | | | | Rise | Fall | 1922 | 1921 | |
| Ganges | Monghyr ... | 30th June 1923 | 6 A.M. ... | 106·00′ | 0 00′ | 106 00′ | 0·90′ | ... | 111·30′ | 110·10′ | |
| | Rajmahal ... | 30th „ „ | 6 „ ... | ... | 56 319′ | ... | ... | ... | 70·219′ | 69 269′ | |
| | Goalundo ... | 30th „ „ | 8 hours ... | 20·10′ | 4 896′ | 24·996′ | 0·10′ | ... | 23·896′ | 24·496′ | |
| Brahmaputra | Gauhati ... | 30th „ „ | 8 A.M. ... | 17·90′ | 135 18′ | 153 08′ | 0 20′ | ... | 161·08′ | 157·48′ | |
| | Serajganj ... | 30th „ „ | 12 hours ... | 35·10′ | 1 509′ | 36 609′ | 0·10′ | ... | 38 909′ | 39·309′ | |
| | Dibrugarh ... | 30th „ „ | 9 A.M. ... | 19·50′ | 314·18′ | 333 68′ | Steady | | 336·28′ | 332·18′ | |
| Meghna | Bhairab Bazar | 30th „ „ | 6 hours ... | 17·17′ | 1 61′ | 18 78′ | 0 17′ | ... | 15·53′ | ... | |
| | Chandpur ... | 30th „ „ | 6 „ ... | 11·42′ | 1·61′ | 13 03′ | 0 08′ | ... | 12·44′ | 11·11′ | |
| | Fenchuganj ... | 30th „ „ | 7 „ ... | 31·30′ | 1 509′ | 32·809′ | ... | 0·20′ | 26·909′ | 30 709′ | |
| Dhaleswari ... | Sabhar ... | 30th „ „ | 6 A.M. ... | 24·70 | – 8·62 | 16·08′ | ... | 0·10′ | 15·78′ | 15·58′ | |
| Bhagirathi .. | Swarupganj .. | 30th „ „ | 6 „ ... | 6·20′ | 1·509′ | 7·709′ | 0 46′ | ... | 18·249′ | 8 619′ | |
| Damodar ... | Edilpur ... | 30th „ „ | 6 „ ... | 11·79′ | 92 58′ | 104·37′ | 4 79′ | ... | 103 66′ | 100 75′ | |
| Lakhya ... | Narayanganj | 30th „ „ | 8 „ ... | 20·67′ | – 5 59′ | 15·08′ | 0 04′ | ... | 14 14′ | 14 24′ | |
| Madaripur Bil Route | Takerhat ... | 30th „ „ | 6 „ ... | 89·60′ | – 0 599′ | 89·001′ | 0 10′ | ... | 9·001′ | 9 101′ | |

**Statement showing the daily gauge readings of certain rivers at the stations named below for the week ending Thursday, the 5th July 1923.**

| Name of river and place where readings are taken | | Date | Hour | Reading on gauge. | Value of zero referred to P W D datum. | Height above P W D datum. | Compared with previous day's height: Rise | Compared with previous day's height: Fall | Height above P W D datum on same date in— 1922 | Height above P W D datum on same date in— 1921. | Remarks. |
|---|---|---|---|---|---|---|---|---|---|---|---|
| Ganges ... | Monghyr ... | 1st July 1923 | 6 A.M. ... | 108·10′ | 0·00′ | 108 10′ | 2·10′ | ... | 111·50′ | 110·20′ | |
| | Rajmahal ... | 1st " " ... | 6 " ... | ... | 56 319′ | ... | ... | ... | 72·319′ | 70·319′ | |
| | Goalundo ... | 1st " " ... | 8 hours ... | 20·20′ | 4·896′ | 25·096′ | 0·10′ | ... | 24 396′ | 24 696′ | |
| Brahmaputra ... | Gauhati ... | 1st " " ... | 8 A.M. ... | 19 30′ | 135 18′ | 154·48′ | 1·40′ | ... | 161 38′ | 157·68′ | |
| | Serajganj ... | 1st " " ... | 12 hours ... | 35·20′ | 1 509′ | 36·709′ | 0 10′ | ... | 39·409′ | 39·209′ | |
| | Dibrugarh ... | 1st " " ... | 9 A.M. ... | 19·70′ | 314 18′ | 333 88 | 0 20′ | ... | 335·88′ | 334 28′ | |
| Meghna ... | Bhairab Bazar | 1st " " ... | 6 hours ... | 17·33′ | 1 61′ | 18 94′ | 0·17′ | ... | 15·69′ | ... | |
| | Chandpur ... | 1st " " ... | 6-30 " ... | 11 25′ | 1·61′ | 12 86′ | ... | 0·17′ | 12 44′ | 11·36′ | |
| | Fenchuganj ... | 1st " " ... | 7 " ... | 31 05 | 1 509′ | 32·559′ | ... | 0·25′ | 27·009′ | 30·809′ | |
| Dhaleswari ... | Sabhar ... | 1st " " ... | 6 A.M. ... | 24 80′ | –8·62′ | 16 18′ | 0·10′ | ... | 16 18 | 15·48′ | |
| Bhagirathi ... | Swarupganj ... | 1st " " ... | 6 " ... | 7 02′ | 1 509′ | 8 529′ | 0·82′ | ... | 18·329′ | 7·799′ | |
| Damodar ... | Edilpur ... | 1st " " ... | 6 " ... | 11·50′ | 92·58′ | 104·08′ | ... | 0·29′ | 104·08′ | 98·75′ | |
| Lakhya ... | Narayanganj | 1st " " ... | 8 " ... | 20·44′ | –5·59′ | 14 85′ | ... | 0 23′ | 14·24′ | 14·16′ | |
| Madaripur Bil Route | Takerhat ... | 1st " " ... | 6 " ... | 89 60′ | –0 599′ | 89·001′ | Steady | | 9·201′ | 9 051′ | |

**Statement showing the daily gauge readings of certain rivers at the stations named below for the week ending Thursday, the 5th July 1923.**

| Name of river and place where readings are taken | | Date | Hour | Reading on gauge. | Value of zero referred to P W D datum | Height above P W D datum | Compared with previous day's height: Rise. | Compared with previous day's height: Fall. | Height above P W D datum on same date in— 1922. | Height above P W D datum on same date in— 1921 | Remarks. |
|---|---|---|---|---|---|---|---|---|---|---|---|
| Ganges ... | Monghyr ... | 2nd July 1923 | 6 A.M ... | 109 00′ | 0·00′ | 109 00′ | 0 90′ | .. | 111·50′ | 111·30′ | |
| | Rajmahal .. | 2nd „ „ .. | 6 „ ... | . | 56·319′ | ... | ... | ... | 72 519′ | 70·719′ | |
| | Goalundo ... | 2nd „ , ... | 8 hours ... | 20 20′ | 4·896′ | 25 096′ | Steady | | 24·796′ | 25·096′ | |
| Brahmaputra ... | Gauhati ... | 2nd „ , ... | 8 A M. ... | 20 80′ | 135 18′ | 155 98 | 1 50′ | ... | 160·78′ | 158 18′ | |
| | Serajganj ... | 2nd „ „ ... | 12 hours ... | 35 35′ | 1·509′ | 36·859′ | 0 15 | ... | 39 709′ | 39 709′ | |
| | Dibrugarh ... | 2nd „ , ... | 9 A.M. ... | 19 30′ | 314·18′ | 333 48′ | ... | 0·40′ | 335 08′ | 336·48′ | |
| Meghna ... | Bhairab Bazar | 2nd „ „ ... | 6 hours | 17 42′ | 1·61′ | 19 03 | 0 08 | ... | 16·11′ | ... | |
| | Chandpur ... | 2nd „ „ ... | 7-30 „ ... | 10 75′ | 1 61′ | 12 36′ | 0 50′ | ... | 12·19′ | 11 53′ | |
| | Fenchuganj ... | 2nd „ „ ... | 7 „ . | 30 85′ | 1 509′ | 32 359′ | ... | 0 20 | 27 109′ | 30 809′ | |
| Dhaleswari ... | Sabhar ... | 2nd „ „ ... | 6 A M .. | 24 80′ | – 8 62 | 16 18′ | Steady | | 16 58′ | 15·48′ | |
| Bhagirathi ... | Swarupganj ... | 2nd , „ ... | 6 „ ... | 8 42 | 1 509′ | 9 929′ | 1 40′ | ... | 18 099′ | 7 169′ | |
| Damodar ... | Edilpur ... | 2nd „ . ... | 6 , ... | 10 33′ | 92 58′ | 102 91′ | ... | 1 17′ | 103 83′ | 97·50′ | |
| Lakhya ... | Narayanganj | 2nd , „ ... | 8 „ ... | 20 33′ | – 5 59′ | 14 74 | ... | 0 10′ | 14 24′ | 14 41′ | |
| Madaripur Bil Route | Takerhat ... | 2nd „ „ ... | 6 „ ... | 89 60′ | – 0·599′ | 89 001′ | Steady | | 9·401′ | 9 001 | |

**Statement showing the daily gauge readings of certain rivers at the stations named below for the week ending Thursday, the 5th July 1923.**

| Name of river and place where readings are taken. | | Date | Hour | Reading on gauge | Value of zero referred to P. W. D. datum | Height above P. W. D datum | Compared with previous day's height: Rise | Compared with previous day's height: Fall | Height above P. W. D datum on same date in— 1922. | Height above P. W. D datum on same date in— 1921 | Remarks. |
|---|---|---|---|---|---|---|---|---|---|---|---|
| Ganges | Monghyr | 3rd July 1923 | 6 A. M. | 109 50′ | 0·00′ | 109 50′ | Steady | | 112·10′ | 112 30′ | |
| | Rajmahal | 3rd „ „ | 6 „ | ... | 56·319′ | ... | ... | ... | 72·719′ | 71·119′ | |
| | Goalundo | 3rd „ „ | 8 hours | 20 30′ | 4·896′ | 25 196′ | 0·10′ | ... | 24 896′ | 25 696′ | |
| Brahmaputra | Gauhati | 3rd „ „ | 8 A.M. | 21·60′ | 135·18′ | 156 78′ | 0 80′ | .. | 160·68′ | 159 68′ | |
| | Serajganj | 3rd „ „ | 12 hours | 35·55′ | 1·509′ | 37·059′ | 0 20′ | ... | 40·109′ | 40·209′ | |
| | Dibrugarh | 3rd „ „ | 9 A.M. | 19·30′ | 314·18′ | 333·48′ | ... | ... | 335 38′ | 336·38′ | |
| Meghna | Bhairab Bazar | 3rd „ „ | 6 hours | 17·50′ | 1·61′ | 19·11′ | 0 08′ | ... | 16 44′ | 18·86′ | |
| | Chandpur | 3rd „ „ | 8-30 „ | 10 50′ | 1 61′ | 12·11′ | ... | 0 25′ | 12 11′ | 11·19′ | |
| | Fenchuganj | 3rd „ „ | 7 „ | 30 65′ | 1·509′ | 32·159′ | ... | 0 20′ | 27 209′ | 30·809′ | |
| Dhaleswari | Sabhar | 3rd „ „ | 6 A M | 24 60′ | – 8·62′ | 15·98′ | ... | 0·20′ | 16 88′ | 15·58′ | |
| Bhagirathi | Swarupganj | 3rd „ „ | 6 „ | 8·16′ | 1·509′ | 9 669′ | ... | 0·26′ | 17·909′ | 7·049′ | |
| Damodar | Edilpur | 3rd „ „ | 6 „ | 11·75′ | 92·58′ | 104·33′ | 1·42′ | ... | 103·41′ | 96 33′ | |
| Lakhya | Narayanganj | 3rd „ „ | 8 „ | 20·17′ | – 5·59′ | 14 58′ | ... | 0·17′ | 14·33′ | 14·80′ | |
| Madaripur Bil Route | Takerhat | 3rd „ „ | 6 „ | 89·60′ | – 0·599′ | 89·001′ | Steady | | 9·551′ | 9·051′ | |

**Statement showing the daily gauge readings of certain rivers at the stations named below for the week ending Thursday, the 5th July 1923.**

| Name of river and place where readings are taken. | | Date. | Hour. | Reading on gauge | Value of zero referred to P W D datum. | Height above P W D datum | Compared with previous day's height | | Height above P. W. D. datum on same date in— | | Remarks. |
|---|---|---|---|---|---|---|---|---|---|---|---|
| | | | | | | | Rise. | Fall. | 1922 | 1921. | |
| Ganges ... | Monghyr ... | 4th July 1923 | 6 A.M. ... | 109·70′ | 0·00′ | 109·70′ | 0·20′ | ... | 112·60′ | 113 00′ | |
| | Rajmahal ... | 4th „ „ ... | 6 „ ... | ... | 56 319′ | ... | ... | ... | 73·019′ | 72·019′ | |
| | Goalundo ... | 4th „ „ ... | 8 hours ... | 20·60′ | 4 896′ | 25 496′ | 0·30′ | ... | 24·996′ | 26·196′ | |
| Brahmaputra ... | Gauhati ... | 4th „ „ ... | 8 A.M. ... | 21 90′ | 135·18′ | 157 08′ | 0·30′ | ... | 161·18′ | 160·48′ | |
| | Serajganj ... | 4th „ „ ... | 12 hours ... | 35·80′ | 1 509′ | 37 309′ | 0 25′ | ... | 40 109′ | 40 409′ | |
| | Dibrugarh ... | 4th „ „ ... | 9 A.M. ... | 19·40′ | 314·18′ | 333·58′ | 0·10′ | ... | 335·88′ | 336·18′ | |
| Meghna ... | Bhairab Bazar | 4th „ „ ... | 6 hours | 17·42′ | 1·61′ | 19·03′ | ... | 0·08′ | 16 61′ | 18·94′ | |
| | Chandpur ... | 4th „ „ ... | 9-30 „ | 10·17′ | 1·61′ | 11 78′ | ... | 0·33′ | 12·11′ | 11·36′ | |
| | Fenchuganj ... | 4th „ „ ... | 7 „ | 30·45′ | 1·509′ | 31·959′ | ... | 0 20′ | 27·209′ | 30·709′ | |
| Dhaleswari ... | Sabhar ... | 4th „ „ ... | 6 A M. | 24·70′ | – 8 62′ | 16 08′ | 0·10′ | | 17·08′ | 15·88′ | |
| Bhagirathi ... | Swarupganj ... | 4th „ „ ... | 6 „ ... | 6·94′ | 1 509′ | 8·449′ | ... | 1·22′ | 17·809′ | 7·219′ | |
| Damodar ... | Edilpur ... | 4th „ „ ... | 6 „ ... | 9 58′ | 92 58′ | 102 16′ | ... | 2·17′ | 99 75′ | 95·75′ | |
| Lakhya ... | Narayanganj | 4th „ „ ... | 8 „ .. | 20·00′ | – 5 59′ | 14·41′ | ... | 0·17′ | 14 49′ | 15·01′ | |
| Madaripur Bil Route | Takerhat ... | 4th „ „ ... | 6 „ ... | 89 60′ | – 0·599′ | 89·001′ | Steady | | 9·801′ | 9 301′ | |

**Statement showing the daily gauge readings of certain rivers at the stations named below for the week ending Thursday, the 5th July 1923.**

| Name of river and place where readings are taken. | | Date | Hour. | Reading on gauge. | Value of zero referred to P W D datum | Height above P W. D datum | Compared with previous day's height. Rise. | Compared with previous day's height. Fall. | Height above P W. D. datum on same date in— 1922. | Height above P W. D. datum on same date in— 1921 | Remarks. |
|---|---|---|---|---|---|---|---|---|---|---|---|
| Ganges | Monghyr | 5th July 1923 | 6 A.M. | 109 70′ | 0·00′ | 109 70′ | Steady | | 113·00′ | 113·70′ | |
| | Rajmahal | 5th „ „ | 6 „ | ... | 56 319′ | ... | ... | ... | 73·119′ | 72·819′ | |
| | Goalundo | 5th „ „ | 8 hours | 20·90′ | 4·896′ | 25·796′ | 0·30′ | ... | 25·296′ | 26·796′ | |
| Brahmaputra | Gauhati | 5th „ „ | 8 A.M. | 21·90′ | 135·18′ | 157·08′ | Steady | | 161·08′ | 161·78′ | |
| | Serajganj | 5th „ „ | 12 hours | 36·20′ | 1 509′ | 37·709′ | 0·40′ | ... | 40·209′ | 40·809′ | |
| | Dibrugarh | 5th „ „ | 9 A.M. | 20·00′ | 314·18′ | 334·18′ | 0·60′ | ... | 334·78′ | 335 08′ | |
| Meghna | Bhairab Bazar | 5th „ „ | 6 hours | 17·42′ | 1 61′ | 19·03 | Steady | | 16·61′ | 19·03′ | |
| | Chandpur | 5th „ „ | 10-30 „ | 10 17′ | 1 61′ | 11·78 | Steady | | 12·44′ | 11·61′ | |
| | Fenchuganj | 5th „ „ | 7 „ | 30·30′ | 1·509′ | 31·809′ | ... | 0 15′ | 27·259′ | 30 709′ | |
| Dhaleswari | Sabhar | 5th „ „ | 6 A.M. | 24·60′ | – 8·62′ | 15·98′ | ... | 0·10′ | 17·28′ | 16·18′ | |
| Bhagirathi | Swarupganj | 5th „ „ | 6 „ | 5·90′ | 1 509′ | 7·409′ | ... | 1·04′ | 17·229′ | 7·119′ | |
| Damodar | Edilpur | 5th „ „ | 6 „ | 7 58′ | 92 58′ | 100 16′ | ... | 2 00′ | 99·08′ | 95·50′ | |
| Lakhya | Narayanganj | 5th „ „ | 8 „ | 20·04′ | – 5 59′ | 14·45′ | 0·04′ | ... | 14·66′ | 15·24′ | |
| Madaripur Bil Route | Takerhat | 5th „ „ | 6 „ | 89·60′ | – 0·599′ | 89·001′ | Steady | | 9·701′ | 9·351′ | |

## DISTRICT REPORTS ON WEATHER AND CROPS

**For the week ending on the 4th July 1923.**

**Summary.**—The rainfall throughout the Presidency was generally light Cutting and steeping of lowland jute and harvesting of autumn paddy are progressing under favourable conditions in East and North Bengal districts. Transplantation of winter paddy seedlings and reaping of summer *til* are proceeding. Condition and prospects of standing crops are fairly good. The average price of common rice for the Presidency has remained almost stationary as compared with that of the previous week

| Serial No. | District and subdivision | Rainfall | Price of common rice, in seers, per rupee | | Character of the weather, condition of crops, etc. |
|---|---|---|---|---|---|
| | | | This week | Previous week | |
| 1 | 2 | 3 | 4 | 5 | 6 |
| | | Inches. | | | |
| 1 | 24-PARGANAS ... | 0 35 | 6½ | 6 | Effects of weather on crops are good. Fodder and water are sufficient Cattle-disease is reported from Basirhat subdivision |
| | Diamond Harbour. | 1·35 | 7 1/16 | 7 7/16 | |
| | Barrackpore ... | 0·35 | 6⅝ | 6⅝ | |
| | Barasat ... | 0 10 | 7 5/16 | 7 5/16 | |
| | Basirhat ... | 0 77 | 7 1/16 | 7⅝ | |
| 2 | NADIA ... | 0 41 | 7¼ | 7½ | Weeding of autumn paddy and jute and transplantation of *aman* paddy seedlings continue Fodder and water are sufficient |
| | Kushtia ... | 0 97 | 7½ | 7½ | |
| | Meherpur ... | 1·49 | 6¾ | 6¼ | |
| | Chuadanga ... | 1·11 | 7¼ | 7¼ | |
| | Ranaghat ... | 0 11 | 6½ | 6½ | |
| 3 | MURSHIDABAD | 1·49 | 8½ | 8½ | Weather occasionally cloudy. Prospects of autumn crops are not favourable for want of rain More rain is urgently wanted for *bhadoi* crops and for the cultivation of winter paddy Fodder is sufficient. No large import or export. Cattle-disease is reported from Khargram thana in Kandi |
| | Lalbagh ... | 0·58 | 8 | 8 | |
| | Jangipur ... | 2·28 | 9 | 9 | |
| | Kandi ... | 2·13 | 9¼ | 9¼ | |
| 4 | JESSORE . | 1·67 | 7½ | 7½ | Ploughing and weeding continue. Slight damage has been done to jute in Bongaon by insect-pests More rain is wanted. Export of rice continues from Bongaon. Fodder and water are sufficient. |
| | Jhenidah ... | 2·24 | 8 | (a) | |
| | Magura ... | 1·17 | 7 | 7½ | |
| | Narail ... | 0 69 | 7 | 7 | |
| | Bongaon ... | 0·89 | 8 | 7⅝ | |
| 5 | KHULNA ... | 0 41 | 7½ | 7½ | Weather seasonable. Fodder and water are sufficient Cattle-disease is reported from Morrelganj and Shyamnagar thanas and Pratapnagar beat-house. |
| | Satkhira ... | 5·44 | 8 | 8 | |
| | Bagerhat ... | 3 23 | 8 | 8 | |

(a) Not reported

| Serial No. | District and subdivision | Rainfall. | Price of common rice, in seers, per rupee. | | Character of the weather, condition of crops, etc. |
|---|---|---|---|---|---|
| | | | This week | Previous week. | |
| 1 | 2 | 3 | 4 | 5 | 6 |
| | | Inches. | | | |
| 6 | BURDWAN ... | 2·30 | 7 | 7 | Weather cloudy. The effects of rain have been good to jute and sugarcane. Ploughing of lands for *aman* paddy is going on and re-planting of *aus* paddy seedlings are going on. Condition and prospects of standing crops are fair. The exports and imports of rice are going on as usual. Cattle-disease is reported from some places in the villages of Atghoria and Bridhya para within Kalna circle. Fodder sufficient. Water is sufficient except in some places of Kalna and Asansol. |
| | Asansol ... | 3·00 | 6¼ | 6½ | |
| | Katwa ... | 1·00 | 8¾ | 8¾ | |
| | Kalna ... | 0·89 | 7¼ | 7⅛ | |
| 7 | BIRBHUM ... | 2·04 | 9 | 8½ | Weather hot and cloudy. Transplantation of winter paddy seedlings has not commenced for want of sufficient rain. Fodder and water are sufficient. |
| | Rampurhat ... | 0·92 | 8½ | 8½ | |
| 8 | BANKURA ... | 1·44 | 8 | 8 | Weather seasonable. Transplantation of *aus* paddy seedlings has commenced in places. Condition of standing crops is fair. Export of rice and paddy continues. |
| | Vishnupur ... | 4·91 | 8⅛ | 8 3/16 | |
| 9 | MIDNAPORE ... | 2·18 | 8 11/16 | 8⅝ | Transplantation of winter paddy seedlings continues. Outturn of *rabi til* is fair. Jute is thriving well. Cattle-disease is reported from Chandrakona thana Fodder is sufficient. |
| | Contai ... | 0·67 | 8 | 8 | |
| | Tamluk ... | 1·18 | 6¾ | 6¾ | |
| | Ghatal ... | 2·48 | 7¾ | 7⅝ | |
| | Jhargram ... | 1·99 | 8 | 8½ | |
| 10 | HOOGHLY ... | 2·72 | 6¾ | 6½ | Effects of weather are favourable. Fodder is sufficient The price of rice is falling at Sadar and rising at Serampur. |
| | Serampore ... | 0·18 | 6¼ | 6½ | |
| | Arambagh ... | 2·34 | 8½ | 8½ | |
| 11 | HOWRAH ... | 0·30 | 6½ | 6½ | The weeding of jute has begun. Prospects of standing crops are fair. |
| | Uluberia ... | 0·68 | 7½ | 7½ | |
| 12 | RAJSHAHI (RAMPUR-BOALIA). ... | 1·34 | 7½ | 7½ | Rainfall moderate. Prospects of standing crops are fair. Fodder is sufficient. |
| | Naogaon ... | 1·06 | 6¾ | 6¼ | |
| | Nator ... | 1·46 | 7⅛ | 7⅛ | |
| 13 | DINAJPUR ... | 2·93 | 8⅛ | 8⅛ | Prospects of jute and other autumn crops are fair. Fodder and water are sufficient. Cattle-disease is reported from the police-station Atwari in Thakurgaon subdivision. |
| | Thakurgaon ... | 2·88 | 8½ | 9 | |
| | Balurghat ... | 0·68 | 8 | 8⅛ | |
| 14 | JALPAIGURI ... | 3·78 | 7 | 7 | Condition and prospects of standing crops are not satisfactory. |
| | Alipur ... | 2·01 | 6½ | 6½ | |

| Serial No. | District and subdivision | Rainfall. | Price of common rice, in seers, per rupee. | | Character of the weather, condition of crops, etc. |
|---|---|---|---|---|---|
| | | | This week. | Previous week | |
| 1 | 2 | 3 | 4 | 5 | 6 |
| | | Inches. | | | |
| 15 | DARJEELING ... | 4·44 | 5 | 5 | Maize and *marua* are progressing and potatoes are being harvested. Cattle-disease exists at places. Fodder and water are sufficient. |
| | Kurseong ... | 8·03 | 6 | 6 | |
| | Siliguri ... | 7·05 | 7 | 7 | |
| | Kalimpong ... | 3·08 | 5¾ | 5¾ | |
| 16 | RANGPUR ... | 2·01 | 7 | 7¼ | Weather cloudy. Reaping of jute is going on briskly. Transplantation of winter paddy is going on. Prospects of standing crops are good Fodder and water are sufficient. |
| | Nilphamari ... | 1·41 | 7 | 7 | |
| | Kurigram ... | 1·46 | 7¼ | 7¼ | |
| | Gaibandha ... | 1 32 | 7¼ | 7⅜ | |
| 17 | BOGRA ... | 2 29 | 7¼ | 7½ | Transplantation of *aman* paddy seedlings and reaping of jute have commenced. |
| 18 | PABNA ... | 1 38 | 7¼ | 7¼ | The prospects of crops are good Stock of rice, pasturage and water supply are sufficient |
| | Sirajganj ... | 1·83 | 6¼ | 6¼ | |
| 19 | MALDA ... | 1 32 | 8 | 8 | Prospects of standing crops are fair Lands are being prepared for the transplantation of winter paddy |
| 20 | COOCH BEHAR | 1·35 | 8 | 8 | Weather seasonable Transplantation of *haimanti* seedings and harvesting of *bitri* paddy are going on. Condition of standing crops are fair Cattle-disease is reported from Tufanganj Fodder is sufficient. |
| 21 | DACCA ... | 1·46 | 7½ | 7½ | Weather seasonable. Prospects of jute are favourable. Transplantation of winter paddy, harvesting of *aus* and summer *til* and cutting and steeping of jute are in progress. Cattle-disease is reported from the Narayanganj subdivision. Fodder and water are sufficient. |
| | Manikganj ... | 2·14 | 7¼ | 7¼ | |
| | Narayanganj ... | 2·09 | 7½ | 7½ | |
| | Munshiganj (a) | 1·97 | 7 | 7 | |
| 22 | MYMENSINGH ... | 0 87 | 7 | 7 | Weather rainy and seasonable. Transplantation of winter rice continues Cutting and steeping of jute progressing. Rice market is slightly rising in Tangail and Sadar. Prospects of standing crops are good. Fodder and water are sufficient and available. |
| | Jamalpur ... | 1·59 | 7½ | 8 | |
| | Tangail ... | Nil | 6⅞ | 7⅛ | |
| | Netrakona ... | 2·11 | 7 | 7¾ | |
| | Kishorganj ... | 1·69 | 7 | 7 | |

(a) Munshiganj being very near to Dacca and Narayanganj, its rainfall statistics are not quoted To give information regarding the northern part of the district, rainfall figures for Kapasia thana are reported here.

| Serial No | District and subdivision | Rainfall | Price of common rice, in seers, per rupee | | Character of the weather, condition of crops, etc |
|---|---|---|---|---|---|
| | | | This week | Previous week | |
| 1 | 2 | 3 | 4 | 5 | 6 |
| | | Inches. | | | |
| 23 | FARIDPUR ... | 2·28 | 7½ | 8 | Rain has been beneficial to crops. Prospects of standing crops are favourable. Weeding of jute and paddy is almost finished. Fodder is sufficient. |
| | Goalundo (Rajbari). | 0·88 | 7¼ | 7¼ | |
| | Madaripur ... | 2·19 | 8 | 8 | |
| | Gopalganj (a) ... | 2·00 | 7 | 7 | |
| 24 | BAKARGANJ (BARISAL). | 3·41 | 8 | 7¾ | Weather seasonable. Prospects of standing crops are good Fodder and water are sufficient. |
| | Pirojpur ... | 5·45 | 7 | 7 | |
| | Patuakhali ... | 4·70 | 7 | 7 | |
| | Dakshin Shabazpur (Bhola). | 4·70 | 7¼ | 7 | |
| 25 | CHITTAGONG ... | 3·22 | 6¼ / 6½* | 6 / 6¼* | Weather seasonable. Prospects of standing crops are good. Sowing of *aman* paddy has commenced. Water and fodder are sufficient. *Panga* salt is selling at 11 and 8 seers per rupee at Sadar and Cox's Bazar subdivisions, respectively |
| | Cox's Bazar ... | 9·76 | 7 | 7 | |
| 26 | TIPPERA (COMILLA). | 2·64 | 7¾ | 7¼ | Weather hot and cloudy Prospects of standing crops are good. Cattle-disease is reported from Brahmanbaria subdivision. |
| | Brahmanbaria | 0·63 | 6 2/3 | 6 2/3 | |
| | Chandpur ... | 2·77 | 6⅔ | 6 2/7 | |
| 27 | NOAKHALI ... | 2·32 | 6¼ | 6½ | Weather seasonable Prospects of standing crops are good. Fodder and water are sufficient. |
| | Feni ... | 1·52 | 7½ | 6½ | |
| 28 | CHITTAGONG HILL TRACTS. | 1·81 | 7 | 7 | Weather seasonable Fodder and water are sufficient. |
| 29 | TRIPURA STATE | 0·75 | 7½ | 7½ | Weather seasonable. Ploughing for autumn crops is nearly finished and that for winter paddy continues. Weeding of jute and *jhoom* crops is going on. Condition of cattle is good. Prospects of crops are fair. Fodder and water are sufficient. Cleansed cotton is selling at Rs. 20 to Rs 35 per maund and jute at Rs. 7 to Rs. 10 per maund. |

* Burma rice.

(a) The rainfall at Haridaspur, which is very near to Gopalganj, is shown here.

J. C. ROY, for *Director of Agriculture, Bengal.*

DACCA, *the 7th July 1923.*

**Local areas referred to in notification No. 1897L.S.-G., dated the 25th June 1923.**

| Name of district. | Name of Local Board | Name of thana or police-station | Name of union | Names of mauzas constituting the area of the union board with their jurisdiction list numbers | Boundaries of the union |
|---|---|---|---|---|---|
| Dacca .. | Narayanganj | Sonakanda | Kalagachia | Enatnagar .. 258<br>Bijoydi . 256<br>Jirakdi .. 253<br>Hazipur . 254<br>Kalyandi .. 259<br>Adampur . 260<br>Jindhara . 261<br>Selsardi 284<br>Mukaldi . 285<br>Hardi . 287<br>Nayanagar 286<br>Sibkandi .. 293<br>Uttar Salbdi 283<br>Salbdi 282<br>Dighaldi 281<br>Madhabpasa .. 262<br>Madanganj 252<br>Namchar 264<br>Baha .. 265<br>Naigaon 267<br>Tartaria 266<br>Sagardi 278<br>Dakshin Chandpur . 279<br>Hazradi .. 280<br>Nurpadi 276<br>Barundi .. 277<br>Gharmura 268<br>Ailsardi 269<br>Gokul Gobindbari 270<br>Suchia 271<br>Subhakardi . 272<br>Kalagachia 273<br>Nisang .. 275<br>Mohanpur 274 | North—Bandar union board<br>South—Dhaleswari river<br>East—Sambhupura union<br>West—Municipality area |
| Do .. | Do | Baidyerbazar | Kachpur | Bhargaon 22<br>Sadipur 23<br>Bharot . 37<br>Das Noagaon 38<br>Baragaon .. 35<br>Nayapur . 29<br>Baraibari .. 28<br>Singrabi .. 27<br>Baraba . 24<br>Sairpa . 21<br>Behakair 20<br>Kachpur ... 141<br>Nagar Kachpur .. 142<br>Lakshya Kutubpur .. 139<br>Khaspara ... 140<br>Chongail . 25<br>Lalati .. 26<br>Kusaba ... 129<br>Baghuri ... 128<br>Nanakhi .. 127 | North—Tarabo union<br>East—Jampur union<br>South—Dhamgar union<br>West—Sidhirganj union |
| Do ... | Do. .. | Do .. | Baidyerbazar | Hamchhadi .. 447<br>Uttar Khansardi .. 457<br>Basundardi ... 452<br>Chak Damudardi ... 448<br>Paschim Damudardi ... 449<br>Khamargaon ... 88<br>Par Bagbari ... 86<br>Nayapara ... 87<br>Purba Damudardi ... 450<br>Tengarchar ... 451<br>Narasuldi ... 453<br>Namrakpur ... 456<br>Dakshin Khansardi ... 458<br>Kewar Pattan ... 459<br>Dighi Chandpur ... 460 | North—Baradi union<br>South—Aminpur union board.<br>East—Meghna river<br>West—Sammandi union |

| Name of district. | Name of Local Board. | Name of thana or police-station | Name of union | Names of mauzas constituting the area of the union board with their jurisdiction list number. | | Boundaries of the union. |
|---|---|---|---|---|---|---|
| Dacca ... | Narayanganj | Baidyerbazar | Baidyerbazar—contd | Gabtali | ... 445 | |
| | | | | Panam Gabtali | ... 444 | |
| | | | | Nakati Bhanga | ... 461 | |
| | | | | Purba Chandpur | ... 464 | |
| | | | | Nagarpur | ... 462 | |
| | | | | Nagar Joar | ... 463 | |
| | | | | Mobarakpur | ... 455 | |
| | | | | Syampur | .. 454 | |
| | | | | Sonamayi | ... 466 | |
| | | | | Haria | .. 465 | |
| | | | | Chanderkirti | ... 430 | |
| | | | | Sat Bhaipara | ... 429 | |
| | | | | Bara Tilak | .. 470 | |
| | | | | Chhota Deobhog | ... 468 | |
| | | | | Ramchandradi | ... 469 | |
| | | | | Dharmadi | .. 467 | |
| Do ... | Do .. | Rupganj | Murapara | Atiaspur | .. 168 | North—Lakshya river and Kachpur union |
| | | | | Mathaba | .. 135 | East—Golakandail union |
| | | | | Masinabad | .. 136 | South—Baidyerbazar police-station |
| | | | | Beron | ... 137 | West—Rupganj and Kahetpara union. |
| | | | | Paraba | ... 138 | |
| | | | | Baniadi | ... 133 | |
| | | | | Lakshya Jatrabari | ... 134 | |
| | | | | Mangalkhali | ... 132 | |
| | | | | Murapara | ... 130 | |
| | | | | Chhota Baniadi | ... 131 | |
| | | | | Saritganj | ... 129 | |
| | | | | Sibganj | ... 128 | |
| | | | | Brahmangaon | ... 127 | |
| | | | | Paragaon | ... 139 | |
| | | | | Panchaikhan | .. 140 | |
| | | | | Bhaela | ... 141 | |
| | | | | Mirkuli | ... 142 | |
| | | | | Mirkuthi Chhao | ... 143 | |
| | | | | Chhota Karnagope | .. 144 | |
| | | | | Narsingal | ... 145 | |
| | | | | Bhulta | ... 147 | |
| Do .. | Do ... | Do ... | Golakandail | Amlaba | .. 166 | North—Kanchan union. |
| | | | | Panaba | ... 164 | East—Duptara union board and Brahmandi union. |
| | | | | Adhuria | .. 163 | South—Baidyerbazar police-station. |
| | | | | Kesraba | ... 159 | West—Murapara union |
| | | | | Mahana | ... 161 | |
| | | | | Saoghata | ... 162 | |
| | | | | Golakandail | ... 148 | |
| | | | | Darikandi | ... 153 | |
| | | | | Chhota Darikandi | ... 152 | |
| | | | | Datterkandi | ... 151 | |
| | | | | Gabtalihat | ... 149 | |
| | | | | Darikandi Chowk | ... 150 | |
| Do .. | Do. . | Araihazar | Araihazar | Kamrangarchar | ... 375 | North—Madhabdi union board |
| | | | | Gazipara | ... 376 | East—Sadasadi union board |
| | | | | Mukundi | .. 379 | South—Dhandi and Uchitpura union |
| | | | | Mirka | ... 378 | West—Duptara union board and Brahmandi union. |
| | | | | Turkini | ... 393 | |
| | | | | Balarampur | ... 391 | |
| | | | | Chhota Barapara | .. 390 | |
| | | | | Ronabil | ... 389 | |
| | | | | Burakanda | ... 388 | |
| | | | | Bagadi | ... 401 | |
| | | | | Lolurkandi | ... 400 | |
| | | | | Bagadi Noapara | ... 399 | |
| | | | | Daripara | ... 402 | |
| | | | | Fatepur | ... 404 | |
| | | | | Brahmanpara | ... 405 | |
| | | | | Chhota Sadardia | ... 407 | |
| | | | | Bara Sadardia | ... 406 | |
| | | | | Bailat | ... 403 | |
| | | | | Chhota Khamarchor | ... 443 | |
| | | | | Dakshinpara | ... 444 | |
| | | | | Lesardi | .. 386 | |
| | | | | Baghanagar | ... 387 | |
| | | | | Sibpur | ... 385 | |
| | | | | Krishnapura | ... 381 | |

| Name of district. | Name of Local Board. | Name of thana or police-station. | Name of union | Names of mauzas constituting the area of the union board with their jurisdiction list numbers | Boundaries of the union. |
|---|---|---|---|---|---|
| Dacca .. | Narayanganj | Araihazar | Araihazar - contd | Nagorchar ... 380<br>Jhaughara ... 464<br>Noapara ... 382<br>Araihazar ... 384<br>Failadi ... 383<br>Chautharkandi ... 461<br>Joar Hanschadi .. 460<br>Kaempur ... 445<br>Singarbil ... 446<br>Naikaham .. 447<br>Agharpara . 459<br>Daburpara .. 448<br>Chhota Daburpara . 449<br>Latardi ... 450<br>Singarpur ... 451<br>Sultansahadi 452 | |
| Do .. | Do ... | Do. ... | Brahmandi | Binarchar ... 465<br>Ujan Gobindi ... 466<br>Bara Monohardi ... 467<br>Chhota Monohardi . 468<br>Narandi ... 477<br>Sulpandi . 476<br>Dighaldi . 478<br>Maruadi ... 479<br>Laskardi .. 475<br>Jatrabari .. 463<br>Brahmandi . 462<br>Noadda . 480<br>Fasua .. 481<br>Muraldi 482<br>Rishirchar .. 471<br>Bati Gobindi .. 470<br>Bahapara .. 472<br>Edbardi ... 473<br>Pajardia ... 474<br>Para Silmandi . 483<br>Kumarbhog ... 484<br>Langardi ... 485<br>Prabhabardi .. 486 | North—Duptara union board<br>East—Araihazar and Dhandi union<br>South—Baidyerbazar police station<br>West—Golakandail union |
| Do ... | ... | Narsingdi (Rupganj Revenue thana.) | Narsingdi | Chhota Brahmanpara ... 291<br>Bara Brahmanpara .. 292<br>Satirpara . 293<br>Sridharpur ... 294 | North—Chinispur union<br>West—Shilmandi union<br>South—Meghna river<br>East—Haridhoa river |
| Do ... | Do . | Do ... | Shilmandi | Shilmandi . 275<br>Huguha ... 298<br>Khatra .. 299<br>Baghata .. 300<br>Tulsipur ... 301<br>Khidirpur ... 302<br>Kisinat Baniadi ... 303<br>Ganergaon .. 304<br>Sekherchor . 306<br>Nagor Baniadi .. 305 | North— } —Brahmaputra<br>West— } river<br>South—Mohishashura union<br>East—Chinishpur and Mohishashura union |
| Do . | Do .. | Do ... | Karimpur | Karimpur .. 315<br>Kalikapur .. 319 | North—Meghna river.<br>West—Nazirpur union<br>South—Char Dighaldi union.<br>East—Alokbali union. |
| Do ... | Do ... | Do ... | Paikarchar | Khadimerchar ... 332<br>Bara Khamerchar . 333<br>Char Balapur .. 334<br>Noreswardi ... 335<br>Paikarchor ... 340<br>Bhangorchor ... 341<br>Uttor Bhasania ... 342<br>Bara Balapur ... 343<br>Hesendi ... 344<br>Char Bhasania . 326<br>Kandarpadi . 339<br>Baherchar ... 338 | North—Mohishashura union<br>West—Sadasadi union board<br>South—Bishnandi union<br>East—Meghna river |

| Name of district | Name of Local Board. | Name of thana or police-station. | Name of union. | Names of mauzas constituting the area of the union board with their jurisdiction list numbers | Boundaries of the union. |
|---|---|---|---|---|---|
| Dacca ... | Narayanganj | Narsingdi (Rupganj Revenue thana) | Paikarchar—contd | Banirchar .. 336<br>Bhaterkandi .. 337<br>Puranchar . 327 | |
| Do ... | Do ... | Do ... | Satgaon | Panchrukhi 157<br>Bara Noagon . 217<br>Satgaon .. 216<br>Chairgaon .. 231<br>Uriam ... 228<br>Deboi ... 227<br>Dakshin Swarupabo ... 226<br>Rasulpur . 221 | North— } Amdia union<br>West— } board<br>South—Duptara union board.<br>East—Madhabdi do |
| Do ... | Do ... | Raipura | Sallabad | Belabo ... 204<br>Char Belabo ... 205<br>Char Lakshipur ... 206<br>Purba Char Lakshipur 207<br>Uttar Kalika Prasad .. 209<br>Dakshin do ... 219<br>Saralabad ... 220<br>Ibrahimpur .. 221 | North—Brahmaputra river<br>West—Marjal union<br>South—Narainpur union<br>East—Brahmaputra river |
| Do ... | Do .. | Do ... | Narainpur | Narainpur .. 217<br>Jalalabad ... 218<br>Joar Gobindapur . 210<br>Joar Lakshipur .. 208 | North—Sallabad union<br>West—Marjal union<br>South—Radhanagar union.<br>East—Brahmaputra river |
| Do .. | Do ... | Raipura | Radhanagar. | Kukurmara ... 216<br>Mahmudabad ... 222<br>Chhota Mirjapur . 223<br>Chhota Lakshipur .. 225<br>Nijgaon ... 221<br>Sahar Char . 213<br>Mandharabad . 214<br>Pirpur . 249<br>Prizei Kandi ... 248<br>Anarabad ... 245<br>Sadhunagar ... 246 | North— } Narainpur union<br>West— }<br>South—Raipura union board.<br>East—Moheshpur Union Board |
| Do . | Do | Do .. | Palashtali | Nabuachar ... 271<br>Palashtali ... 272<br>Phuldi ... 273<br>Khalilabad ... 380<br>Dakshin Gobindapur .. 381<br>Sahapur ... 387<br>Mallikpur ... 386<br>Ashrampur .. 385<br>Barampur ... 384<br>Sheoratali ... 382<br>Khagchar .. 383<br>Methiakanda ... 266<br>Tulatali ... 267<br>Nabiabad ... 265 | North—Morjal union<br>West—Arial Khan river.<br>South—Meghna river<br>East—Raipura union board. |
| Do ... | Do ... | Do ... | Amirganj | Rohimabad ... 374<br>Mamudnagar ... 373<br>Hasinabad ... 372<br>Dakshin Mirzanagar ... 371<br>Battali ... 370<br>Bhati Badarpur ... 369<br>Ahmagar ... 366<br>Char Aralia ... 368 | North—Arial Khan river.<br>West— } Meghna river.<br>South— }<br>East—Hairmara union. |

| Name of district. | Name of Local Board. | Name of thana or police-station. | Name of union | Names of mauzas constituting the area of the union board with their jurisdiction list numbers. | Boundaries of the union |
|---|---|---|---|---|---|
| Dacca ... | Narayanganj. | Sibpur (Raipura Revenue thana) | Sadharchar | Bojorkandi ... 315<br>Khupi .. 316<br>Bhabbadi ... 317<br>Dasardi 318<br>Uttar Sadharchar . 314<br>Madhabdi 319<br>Dakshin Sadharchar 320<br>Syder Khola ... 321<br>Harihardi 322<br>Gobindi . 323<br>Maishadi .. 325<br>Piti Palashi 326<br>Shirar Kandi ... 328<br>Kalnar Kandi ... 327<br>Sankardi . 324 | North—Dulalpur union board.<br>West— } Brahmaputra<br>South— } river<br>East—Masimpur union |
| Do ... | Do .. | Do .. | Masimpur. | Mochhimpur . 172<br>Parkardia . 311<br>Dattagaon . 312<br>Miargaon ... 313<br>Kharia . 329<br>Dhama 310<br>Sandandia . 308<br>Abdul Khona 309<br>Bamadi .. 307<br>Bandardia 330 | North—Dulalpur union board and Chakradha union<br>West— } Sadharchar<br>South— } union<br>East—Boghaba union and Paharia Khal |
| Do ... | Do ... | Do ... | Chakradha | Asatia 173<br>Majlishpur . 174<br>Satpara . 182<br>Lakursi Chhapa . 181<br>Boraigaon . 183<br>Ningaon .. 178<br>Bilsoian 177<br>Ghusu .. 179<br>Bangal Satpara . 18<br>Asrafpora 176<br>Pubergaon . 175<br>Shibpur .. 306<br>Arali . 305<br>Chandalbanda 184<br>Bailabo ... 188 | North— } Joynagar union<br>East— }<br>West—Mashimpur union<br>South—Baghabo union. |
| Do ... | Do . | Do .. | Joynagar | Asta Ani . 190<br>Kamrabo 189<br>Sujatpur . 191<br>Pahar Joynagar ... 193<br>Ajkitala 192<br>Maishortek .. 201<br>Gilaber ... 200 | North—Paharia river<br>West—Chakradha union<br>South—Joshar union<br>East—Moryal union |
| Do ... | Do ... | Do ... | Baghabo | Sapharia .. 301<br>Baherdia . 302<br>Baghabo .. 303<br>Panchpaika ... 304<br>Joymongal ... 297<br>Birajnagar ... 194<br>Srifalia ... 196<br>Bangpur ... 296<br>Nowala ... 295<br>Paschim Gobindapur ... 298<br>Akrasol ... 299<br>Hamirdia ... 300<br>Brahmandi ... 294<br>Lampur ... 293<br>Chaupat .. 292<br>Kunderpara ... 291<br>Bil Ichhamati ... 290<br>Chandpasa ... 289<br>Itna ... 287<br>Khainkut ... 286 | North—Joynagar and Chakradha union.<br>West—Paharia river and Masimpur union<br>South—Adiabad union and Arial Khan river<br>East—Joshar union. |

| Name of district. | Name of Local Board | Name of thana or police-station | Name of union | Names of mauzas constituting the area of the union board with their jurisdiction list number | Boundaries of the union |
|---|---|---|---|---|---|
| Dacca ... | Narayanganj. | Shibpur (Raipura Revenue thana) | Hazipur | Saspur ... 342<br>Adgatia ... 343<br>Ghasirdia ... 332<br>Gorargaon ... 344<br>Chandandia .. 348<br>Trisha .. 347<br>Khotsakhali ... 346<br>Bonshirdia ... 358<br>Ayorpur ... 361<br>Nandalpur .. 362<br>Badharchar ... 363<br>Hajipur ... 364<br>Char Hajipur ... 365<br>Badarpur .. 360<br>Hosenpur . 359<br>Dakshin Noadia ... 345 | North—Baghabo union<br>West—Butia union<br>South—Amal Khan river and Amirganj union<br>East—Adhabad union. |
| Do | Do | Do | Adhabad | Telipara . 288<br>Kabipur ... 378<br>Char Khankut . 377<br>Kasimnagar .. 376<br>Adhabad .. 379<br>Dankerchar ... 375 | North—Baghabo and Joshar unions<br>West—Dankerchar union<br>South—Mirzanagar union<br>East—Mirzanagar and Palashtali unions |
| Do .. | Do | Manohordi (Raipura Revenue thana) | Char Mandalia | Char Manalia 31<br>Char Golgalia 33<br>Krishnapur . 34 | North—Brahmaputra river<br>West } Khidirpur union<br>South }<br>East—Mymensingh district |
| Do | Do .. | Do | Borachopa | Aloakandi .. 68<br>Char Tarakandi .. 66<br>Noanagar .. 65<br>Balga ... 69<br>Pir Marjdia .. 70<br>Urubia ... 71<br>Bhoradia . 64<br>Bhayasan ... 63<br>Barachopa ... 62<br>Parkan .. 35<br>Char Krishnapur ... 37<br>Jamalpur ... 36<br>Chanditala ... 61<br>Kabotergaon ... 72<br>Panch hati ... 59<br>Kalidhakona .. 58<br>Kasba ... 57<br>Atosal ... 60<br>Brahmanergaon ... 39 | North—Khidirpur union<br>West—Kachikata union<br>South—Patuli union<br>East—Bimaband union |
| Do | Do ... | Do. | Chandanbari | Achhadnagar ... 9<br>Naluachak ... 19<br>Chalakchar ... 18<br>Chengain ... 17<br>Madhupur ... 13<br>Kismat—Lakhpur<br>" Bagber<br>" Sarai Kandi<br>" Habipur.<br>Arjun char ... 10<br>Chandanbari ... 11 | North—Lebutala union board.<br>West—Kapasia police-station<br>South—Sukundi union.<br>East—Kachikata union. |

| Name of district. | Name of Local Board. | Name of thana or police-station. | Name of union. | Names of mauzas constituting the area of the union board with their jurisdiction list numbers | Boundaries of the union |
|---|---|---|---|---|---|
| Dacca ... | Narayanganj | Monohardi (Raipura Revenue thana). | Sukundi | Monohordi ... 118<br>Madhabdi chak ... 12<br>Sallabad ... 117<br>Mirzanagar .. 116<br>Horardia . 119<br>Dighakandi .. 120<br>Chak Narandi . 121<br>Narandi .. 122<br>Das Jonar chak ... 123<br>Sukandi .. 124<br>Gandordia .. 127<br>Sabhordia ... 128<br>Salpa Panchkandi .. 126<br>Khajnabat .. 129<br>Balupara . 130<br>Ramchandradi ... 125 | North—Chandanbari union<br>West—Kapasia police-station<br>South—Ekduaria union board<br>East—Gotashia union |
| Do ... | Do .. | Do ... | Gotashia | Dongaon 114<br>Brahmanbata . 113<br>Gotashia . 112<br>Sarba Lakhana 111<br>Panchkandi .. 110<br>Chula 109<br>Akanagar . 108 | North—Kachikata union<br>East—Baznabo union<br>South—Joynagar union<br>West—Sukundi union and Ekduaria union board |
| Do .. | Do .. | Do. . | Patuli .. | Htabispur .. 56<br>Nagar Nalua Kot 55<br>Galgaha ... 54<br>Bil Kandi . 53<br>Muga .. 42<br>Uttar Patuli . 40<br>Uttar Bangalgaon 41<br>Poradia . 50<br>Rayergaon . 52<br>Pubertek . 51<br>Tangirtek . 89<br>Dapunia .. 88<br>Bangalgaon .. 90<br>Gobindadi .. 94<br>Dhanertek .. 93<br>Chandipara ... 95<br>Kanairtek . 97<br>Salania ... 98<br>Nandarampur .. 96<br>Jamtala .. 92<br>Ckakaimkhola . 91<br>Bhabla ... 107<br>Patuli ... 99 | North—Borachapa union<br>East—Binnabaid union<br>South—Baznabo union<br>West—Kachikata union |
| Do ... | Do ... | Do ... | Baznabo | Hari Sangan ... 105<br>Chitan . 106<br>Baghber .. 100<br>Chandanpur ... 104<br>Dakshin Dheru ... 103<br>Baznabo ... 102<br>Buribari ... 101 | North—Patuli union<br>East—Arial Khan river<br>South—Marjal union<br>West—Gotashia union. |

***Statement showing the gauge-readings at Dacca Water-works station on the river Buriganga for the week ending 23rd June 1923.***

| Date. | At 7 A.M. | At highest water | | At lowest water | | At 5 P.M. | Remarks |
|---|---|---|---|---|---|---|---|
| | | Time | Readings. | Time. | Readings. | | |
| 1923. 17th June | 58 65 | 13-0 | 59 6 | 7-0 | 58·65 | 59 35 | F. T. at 7-12. H. T. at 13-15. |
| 18th „ ... | 58 75 | 13 52 | 60 0 | 7-15 | 58 8 | 59·6 | F. T. at 8 H. T. at 14 5. |
| 19th „ ... | 60 1 | 14-35 | 60 25 | 8-40 | 59 0 | 60 0 | F. T. at 8-55 H. T. at 14-50 |
| 20th „ ... | 60 6 | 15 20 | 60 8 | 9-20 | 59·6 | 60 65 | F. T. at 9-35 H. T. at 15-30 |
| 21st „ ... | 61 15 | 16-10 | 61 25 | 10 10 | 60 5 | 61 1 | F. T. at 10-22. H. T. at 16-35. |
| 22nd „ ... | 61·4 | 17-0 | 61 4 | 11-0 | 60 8 | 61 4 | F. T. at 11-15 H. T. at 17 15. |
| 23rd „ .. | 61 25 | 17-40 | 61 45 | 11-50 | 60 95 | 61 4 | F. T. at 12-0 H. T. at 17 55 |

*Notable high and low water-levels of previous years.*

| | | | |
|---|---|---|---|
| | | High | |
| 27th August | 1906 | 70 5 | Taken at high tide |
| 5th September | 1909 | 67 86 | |
| 10th August | 1910 | 69 86 | |
| 1st „ | 1911 | 68 46 | |
| 13th „ | 1912 | 67 16 | |
| 31st „ | 1915 | 69 7 | |
| 18th „ | 1916 | 68 1 | |
| 12th „ | 1917 | 67 1 | |
| 31st „ | 1918 | 69 12 | |
| 2nd „ | 1919 | 66 8 | |
| 8th September | 1920 | 66 9 | |
| 28th July | 1921 | 68 4 | |
| 10th August | 1922 | 68 00 | |
| | | Low | |
| 23rd February | 1907 | 51 06 | Taken at low tide |
| 13th „ | 1908 | 51 06 | |
| 12th March | 1912 | 51 06 | |
| 6th „ | 1914 | 50 60 | |
| 22nd February | 1915 | 50 80 | |
| 15th „ | 1916 | 50 60 | |
| 3rd March | 1917 | 51 0 | |
| 21st February | 1918 | 51 40 | |
| 26th „ | 1919 | 50 4 | |
| 18th „ | 1920 | 50 9 | |
| 19th „ | 1921 | 50 9 | |
| 8th March | 1922 | 51 05 | |

*N B.*—Zero of the gauge at Dacca water-works = – 48 51 with reference to P W D datum

B. L. SUBARWAL, *Executive Engineer,*
*Khulna Division.*

CALCUTTA, *the 30th June 1923.*

***Statement of weekly gauge-readings on the river Ganges at Rampur-Boalia for the week ending 30th June 1923.***

| Date. | Hour. | Height of surface above zero of P W.D datum. | Height of surface above P. W. D datum. | Height of surface above P. W D datum on the same date last year. | Remarks |
|---|---|---|---|---|---|
| 1923. | | | | | |
| 24th June ... | 7 A M. | 43 30 | 43 30 | 43·10 | P W D datum 6 25 feet above Kidderpore old dock sill<br>B M on Rajshahi College step 64 95.<br>Value of zero = 0·00 P W. D. |
| 25th " ... | 7 " | 43 80 | 43 80 | 43·70 | |
| 26th " ... | 7 " | 44 00 | 44 00 | 44·40 | |
| 27th " ... | 7 " | 44 00 | 44 00 | 45 40 | |
| 28th " ... | 7 " | 43 95 | 43 95 | 46 80 | |
| 29th " ... | 7 " | 43 95 | 43·95 | 47 80 | |
| 30th " ... | 7 " | 44 10 | 44·10 | 48 40 | |

| | | Old value | According to P W D datum |
|---|---|---|---|
| The previous year's | Highest water-level .. | on 15th September 1922 ... | 61 75 |
| Ditto | Lowest " ... | on 4th May 1923 | 35 80 |
| Record | Highest " .. | 69 25 on 26th August 1879 ... | 64 44 |
| Do | Ditto " ... | 69 08 on 9th September 1885 ... | 64 27 |
| Do. | Ditto " ... | 68 30 on 25th August 1906 ... | 63 47 |
| Do | Ditto " .. | 68 21 on 26th August 1890 .. | 63 40 |
| Do | Lowest " ... | 37 68 on 25th April 1884 ... | 32 82 |
| Do | Ditto " ... | 38 18 on 14th and 15th April 1888 ... | 33 32 |
| Do | Ditto " ... | 39 02 on 21st and 22nd April 1897 . | 34 21 |
| Do | Ditto " ... | 39 28 on 6th and 7th May 1908 .. | 34 47 |
| Do | Ditto " | on 9th May 1922 . | 34 70 |

*N B* —The gauge-readings commenced from the 1st August 1887

JADAB CHANDRA GHOSH, for *Subdivisional Officer*,

BOALIA, *the 30th June 1923.* *I. D., Jangipur.*

***Statement of weekly gauge-readings on the rivers Ganges and Brahmaputra at Goalundo for the week ending 30th June 1923.***

| Month and date. | Hour. | Height of surface above or below zero of gauge. | Height of surface above mean sea-level | Height of surface above mean sea-level on same date last year | Remarks. |
|---|---|---|---|---|---|
| 1923 | | | | | |
| 24th June ... | 7 A.M. | 19 9 | 19 9 | 18 1 | Zero is placed at mean sea-level.<br>The bench-mark for the gauge is on a pucca pillar between the passenger ghat and Chandpore ghat<br>Its reduced level is 26 84. |
| 25th " ... | 7 " | 19·9 | 19 9 | 16 3 | |
| 26th " ... | 7 " | 19 8 | 19 8 | 17 0 | |
| 27th " ... | 7 " | 19 8 | 19 8 | 17 5 | |
| 28th " ... | 7 " | 20 0 | 20 0 | 18 0 | |
| 29th " ... | 7 " | 20 0 | 20 0 | 18·4 | |
| 30th " ... | 7 " | 20 1 | 20 1 | 19 5 | |

| | | |
|---|---|---|
| The previous year ... ... | Highest water-level .. | 24 6 on 16th August 1922. |
| Ditto ... ... | Lowest " .. | 4 3 on 14th March 1922. |
| Record (H. F in Brahmaputra and Ganges) ... .. | Highest " . | 25 75 on 28th August 1906 |
| Record (average flood in Brahmaputra and Ganges) ... | Ditto " ... | 25 74 on 20th and 21st August 1893 |
| Record (H F. in Brahmaputra and Ganges) ... .. | Ditto " .. | 25 66 on 11th to 17th and 31st August 1889 and on 1st to 3rd September 1889 |
| Record (H F. in Brahmaputra only) .. ... | Ditto " .. | 25 66 on 31st July 1900 |
| Record ... ... | Lowest " . | 1·0 on 8th February 1914 |
| Do. ... ... | Ditto " ... | 2 42 on 18th March 1908. |
| Do. ... ... | Ditto " ... | 2 91 on 21st to 24th February 1884 and 8th to 9th March 1884 |
| Do. .. ... | Ditto " .. | 3 16 on 9th to 11th March 1885 |
| Do ... ... | Ditto " .. | 3 16 on 16th, 17th and 29th to 31st March 1901. |

*N.B* —The gauge-readings commenced from 3rd October 1909

R. C. GUHA, *Subdivisional Officer*,

RAJBARI, *the 30th June 1923.* *P. W. D., Faridpur.*

**IRRIGATION DEPART**

***Statement showing heights over mean sea-level and low water in the rivers Ganges, reading of each gauge over M. S. L. as***

| Date. | RIVER GANGES | | | | | | | | | | | |
|---|---|---|---|---|---|---|---|---|---|---|---|---|
| | Mirzapur Zero of gauge 206 22 ft | | | Benares, Zero of gauge 196 80 ft | | Buxar Zero of gauge 167 55 ft | | Dinapore. Zero of gauge 124 23 ft. | | Monghyr Zero of gauge is at mean sea-level. | |
| | Distance in miles. | From Allahabad, 56 | | From Allahabad 134 | From Mirzapur, 48 | From Benares, 90. | | From Benares, 177 | From Buxar, 87 | From Benares, 287 | From Dinapore, 110 |
| | Highest gauge reading. | 2nd September 1916 265 97 | | 2nd September 1916. 244 30 | | 3rd and 4th September 1916 200 80 | | 5th September 1901. 169 78 | | 8th September 1901. 128 19. | |
| | Lowest gauge reading. | 28th June 1897. 187 30 | | 1st May 1877 182 80 | | 10th to 14th May 1914 159 30 | | 20th April 1912 135 13 | | 29th April to 6th May 1914. 94 59. | |
| | | Height over zero of gauge. | Height over mean sea-level | Height over zero of gauge | Height over mean sea level | Height over zero of gauge | Height over mean sea level | Height over zero of gauge | Height over mean sea-level | Height over zero of gauge | Height over mean sea level |
| 1 | 2 | 3 | 4 | 5 | 6 | 7 | 8 | 9 | 10 | 11 | 12 |
| 1st ... | ... | 4 46 | 210 68 | 1 33 | 198 13 | 3 25 | 170 80 | 9 20 | 143 43 | 100 20 | 100 20 |
| 2nd ... | ... | 4 42 | 210 64 | 1·33 | 198 13 | 3 25 | 170 80 | 9 20 | 143 43 | 100 20 | 100·20 |
| 3rd ... | ... | 4 42 | 210 64 | 1 25 | 198 05 | 3 25 | 170 80 | 9 20 | 143·43 | 100 20 | 100 20 |
| 4th ... | ... | 4·42 | 210 64 | 1 25 | 198 05 | 3 17 | 170 72 | 9 20 | 143 43 | 100 20 | 100 20 |
| 5th ... | ... | 4·33 | 210 55 | 1 17 | 197 97 | 3·17 | 170·72 | 9 20 | 143·43 | 100 20 | 100 20 |
| 6th .. | ... | 4 33 | 210 55 | 1 17 | 197 97 | 3 17 | 170 72 | 9 20 | 143 43 | 100 20 | 100 20 |
| 7th ... | ... | 4 33 | 210 55 | 1 08 | 197 88 | 3 17 | 170 72 | 9 20 | 143 43 | 100 20 | 100 20 |
| 8th ... | ... | 4 25 | 210 47 | 1 00 | 197 80 | 3 17 | 170 72 | 9·10 | 143 33 | 100 30 | 100 30 |
| 9th ... | ... | 4 25 | 210 47 | 0 92 | 197 72 | 3 17 | 170 72 | 8·90 | 143·13 | 100 40 | 100 40 |
| 10th ... | ... | 4 25 | 210 47 | 0 92 | 197 72 | 3 17 | 170·72 | 8 60 | 142 83 | 100 40 | 100 40 |
| 11th ... | ... | 4 17 | 210 39 | 0 75 | 197·55 | 3 17 | 170·72 | 8 30 | 142 53 | 100 40 | 100 40 |
| 12th ... | .. | 4 17 | 210 39 | 0·58 | 197·38 | 3·00 | 170 55 | 8·20 | 142 43 | 100·40 | 100 40 |
| 13th ... | ... | 4 08 | 210 20 | 0 42 | 197 22 | 3·00 | 170·55 | 8 20 | 142 43 | 100 30 | 100 30 |
| 14th ... | ... | 4 08 | 210 30 | 0 25 | 197 05 | 3·00 | 170 55 | 8 20 | 142·43 | 100 30 | 100 30 |
| 15th .. | ... | 4 00 | 210 22 | 0 08 | 196 88 | 3 00 | 170 55 | 8 20 | 142 43 | 100·20 | 100 20 |
| 16th .. | ... | 4 00 | 210 22 | 0 00 | 196 80 | 3 00 | 170 55 | 8·20 | 142 43 | 100 20 | 100 20 |
| 17th ... | ... | 4·00 | 210 22 | Below zero. 0 17 | 196 63 | 2·83 | 170 38 | 8 00 | 142·23 | 100 10 | 100·10 |
| 18th ... | ... | 3 92 | 210 14 | 0 25 | 196 55 | 2·67 | 170 22 | 7 90 | 142·13 | 100 10 | 100 10 |
| 19th ... | ... | 3 92 | 210 14 | 0 33 | 196 47 | 2 42 | 169·97 | 7 90 | 142 13 | 100 10 | 100 10 |
| 20th ... | ... | 3 83 | 210 05 | 0 42 | 196 38 | 2 17 | 169·72 | 7 90 | 142 13 | 100 00 | 100·00 |
| 21st ... | ... | 3 83 | 210·05 | 0 50 | 196 30 | 2 00 | 169·55 | 7 90 | 142 13 | 100 00 | 100 00 |
| 22nd ... | ... | 3 75 | 209 97 | 0·58 | 196 22 | 2 00 | 169·55 | 7 90 | 142·13 | 100·00 | 100 00 |
| 23rd ... | .. | 3 75 | 209 97 | 0 67 | 196 13 | 2 00 | 169 55 | 7 80 | 142·03 | 99 90 | 99 90 |
| 24th ... | ... | 3 75 | 209 97 | 0 75 | 196 05 | * | * | 7·80 | 142·03 | 99 80 | 99·80 |
| 25th ... | ... | 3 67 | 209·89 | 0 83 | 195 97 | * | * | 7·80 | 142·03 | 99 80 | 99·80 |
| 26th ... | ... | 3 58 | 209 80 | 0 92 | 195·88 | * | * | 7·80 | 142·03 | 99·80 | 99·80 |
| 27th ... | ... | 3 58 | 209 80 | 1 00 | 195 80 | * | * | 7·80 | 142·03 | 99 70 | 99·70 |
| 28th ... | ... | 3·50 | 209 72 | 1·08 | 195·72 | * | * | 7 80 | 142·03 | 99 70 | 99 70 |
| 29th .. | ... | 3 50 | 209 72 | 1·17 | 195 63 | * | * | 7 80 | 142·03 | 99 60 | 99·60 |
| 30th ... | ... | 3·42 | 209 64 | 1 25 | 195 55 | * | * | 7·80 | 142·03 | 99 60 | 99·60 |

* The gauge post being swept away by current, no readings

*The 10th July 1923.*

**MENT, BENGAL.**

***Bhagirathi, Jalangi and Brahmaputra for the month of April 1923, and the highest well as the lowest gauge reading since 1876.***

| | | | | | | River Bhagirathi | | River Jalangi. | | River Brahmaputra. | |
|---|---|---|---|---|---|---|---|---|---|---|---|
| Rajmahal. Zero of gauge is at 56·219. | | Rampur-Boalia. Zero of gauge 1 51 ft | | Goalundo Zero of gauge is 4 896 ft. above mean sea-level | | Berhampore Zero of temporary gauge 31 509 | | Swarupganj Zero of gauge 1,809 | | Gauhati Zero of gauge 135 18 | |
| From Benares, 407. | From Monghyr, 120. | From Benares, 471. | From Rajmahal, 64. | From Benares, 591. | From Rampur-Boalia, 120. | | | | | | |
| 18th August 1913. 97·319 | | 26th August 1879. 28·76. | | 28th August 1906 and 14th September 1915 30 446 | | 14th August 1890 63 459 | | 25th September 1900 34·109 | | 24th August 1908 167 53 | |
| 2nd May 1910 56·559. | | 23rd April 1856 —1·43. | | 28th March 1910 7 146 | | 19th to 24th April 1917 33 909. | | 28th March 1915 1 209 | | 9th February 1888. 125 88 | |
| Height over zero of gauge. | Height over mean sea level. | Height over zero of gauge | Height over mean sea-level | Height over zero of gauge. | Height over mean sea-level | Height over zero of gauge | Height over mean sea-level | Height over zero of gauge | Height over mean sea-level | Height over zero of gauge | Height over mean sea-level |
| 13 | 14 | 15 | 16 | 17 | 18 | 19 | 20 | 21 | 22 | 23 | 24 |
| | | | | | | | | | | Below zero | |
| 6·80 | 63 119 | 34 69 | 36 20 | 6 40 | 11 296 | 3 50 | 35 009 | 3 91 | 5 419 | 3 40 | 131 78 |
| 6·80 | 63 119 | 34 64 | 36 15 | 6 90 | 11 796 | 3 50 | 35 009 | 4 38 | 5 889 | 3 20 | 131 98 |
| 6·55 | 63·169 | 34·59 | 36 10 | 7 10 | 11 996 | 3 50 | 35 009 | 4 15 | 5 659 | 2·90 | 132 28 |
| 6 85 | 63 169 | 34 59 | 36 10 | 7 20 | 12·096 | 3 40 | 34 909 | 3 98 | 5 489 | 2 10 | 133 08 |
| 6 85 | 63 169 | 34 64 | 36 15 | 7 30 | 12 196 | 3·40 | 34 909 | 4 01 | 5 519 | 1 70 | 133 48 |
| 6 85 | 63 169 | 34 64 | 36 15 | 7 20 | 12 096 | 3 40 | 34 909 | 3 90 | 5 409 | 1 70 | 133 48 |
| 6 90 | 63 219 | 34 69 | 36 20 | 7 00 | 11 896 | 3 40 | 34 909 | 3 26 | 4 769 | 1 90 | 133 28 |
| 6·90 | 63 219 | 34 69 | 36 20 | 6 80 | 11 696 | 3 40 | 34 909 | 2 80 | 4 309 | 1 90 | 133 28 |
| 6 95 | 63 269 | 34 69 | 36 20 | 6 70 | 11 596 | 3 40 | 34 909 | 2 65 | 4 159 | 2 00 | 133 18 |
| 6 95 | 63·269 | 34 74 | 36 25 | 6 60 | 11 496 | 3 40 | 34 909 | 2·70 | 4 209 | 2 00 | 133 18 |
| 7·00 | 63 319 | 34 79 | 36 30 | 6 70 | 11·596 | 3 30 | 34 809 | 2 58 | 4 089 | 1 60 | 133 58 |
| 7 00 | 63 319 | 34 84 | 36 35 | 6 90 | 11 796 | 3 30 | 34 809 | 2 46 | 3 969 | 1 20 | 133 98 |
| 7·00 | 63 319 | 34 89 | 36 40 | 7 10 | 11·996 | 3 30 | 34 809 | 2 95 | 4 459 | 1 10 | 134 08 |
| 7·00 | 63 319 | 34 89 | 36 40 | 7 60 | 12 496 | 3 30 | 34 809 | 3 30 | 4 809 | 0·90 | 134 28 |
| 6 90 | 63 219 | 34 94 | 36 45 | 7 60 | 12 496 | 3 30 | 34 809 | 3 20 | 4 709 | 0 50 | 134 68 |
| 6 85 | 63 169 | 34 99 | 36 50 | 8 00 | 12·896 | 3·30 | 34 809 | 3 18 | 4 689 | 0 30 | 134·88 |
| 6·85 | 63 169 | 34 99 | 36 50 | 8 10 | 12 996 | 3 20 | 34 709 | 3 17 | 4 679 | 0 20 | 134 98 |
| 6 80 | 63·119 | 34·99 | 36·50 | 8 30 | 13 196 | 3 20 | 34 709 | 3 48 | 4 989 | 0 10 | 135 08 |
| | | | | | | | | | | Above zero. | |
| 6·75 | 63 069 | 34·94 | 36 45 | 8 50 | 13 396 | 3 20 | 34 709 | 3 33 | 4 839 | 2 20 | 137·38 |
| 6 75 | 63·069 | 34 89 | 36 40 | 8 90 | 13 796 | 3 20 | 34 709 | 3 34 | 4·849 | 2 70 | 137 88 |
| 6 70 | 63 019 | 34·84 | 36 35 | 8 90 | 13 796 | 3 20 | 34 709 | 3 26 | 4·769 | 2 30 | 137 48 |
| 6 70 | 63 019 | 34 79 | 36 30 | 8 90 | 13 796 | 3 20 | 34·709 | 3 14 | 4 649 | 2·10 | 137 28 |
| | | | | | | | | | | Below zero | |
| 6 70 | 63 019 | 34 79 | 36 30 | 8 80 | 13 696 | 3 15 | 34 659 | 2 72 | 4 229 | 0·90 | 134 28 |
| | | | | | | | | | | Above zero | |
| 6·65 | 62·969 | 34 74 | 36 25 | 8·90 | 13 796 | 3 15 | 34 659 | 2 50 | 4·009 | 2 00 | 137 18 |
| 6·60 | 62·919 | 34·69 | 36·20 | 8·80 | 13 696 | 3 15 | 34 659 | 2 67 | 4·179 | 3·70 | 138 88 |
| 6·50 | 62 819 | 34·64 | 36·15 | 8·70 | 13·596 | 3·15 | 34 659 | 2 83 | 4 339 | 7 00 | 142 18 |
| 6·45 | 62·769 | 34·59 | 36 10 | 8·50 | 13·396 | 3 10 | 34 609 | 3 09 | 4 599 | 7 10 | 142 28 |
| 6·40 | 62 719 | 34·54 | 36·05 | 8·50 | 13·396 | 3·10 | 34 609 | 3 13 | 4 639 | 6·80 | 141 98 |
| 6·25 | 62·569 | 34·49 | 36·00 | 8·50 | 13·396 | 3 10 | 34·609 | 3·51 | 5 019 | 4 20 | 139 38 |
| 6 15 | 62·469 | 34·44 | 35·95 | 9·20 | 14·096 | 3·10 | 34·609 | 4 24 | 5 749 | 3·80 | 138 98 |

could be taken from 26th April to 26th May 1923.

A. G. MAFLIN,

Deputy Inspector-General of the Chief Engineer.

***Statement showing the quantity of Salt in Bonded Warehouses and afloat on the above Hooghly on the 30th day of June 1923 and transactions during the half-month from the 16th to the 30th June 1923.***

| Description of Salt | In Sulkes Government golas (Bonded) | Quantity afloat | Total | Transactions during half-month from the 16th to the 30th June 1923, inclusive. | | | |
|---|---|---|---|---|---|---|---|
| | | | | Quantity on which duty has been paid | Manifested quantity arrived in the port of Calcutta. | Deliveries from shipboard for consumption and for inland bonded warehouses | Deliveries from bonded warehouses for consumption and for inland bonded warehouses. |
| | Mds Srs | Mds | Mds Srs | Mds | Mds | Mds | Mds. |
| **United Kingdom—** | | | | | | | |
| Liverpool and other Panga salt | 530,257 0 | | 530,257 0 | 59,600 | 86,369 | 37,100 | 81,682 |
| **Other European countries—** | | | | | | | |
| Spanish salt ... ... | 569,192 0 | | 569,192 0 | 12,990 | . | ... | 15,410 |
| Hamburg and Bremen salt | 492,518 0 | | 492,518 0 | 52,300 | 89,680 | 87,400 | 4,250 |
| Hamburg and Bremen rock salt | 2,000 0 | .. | 2,000 0 | ... | ... | ... | ... |
| Port Said salt ... | 789,082 0 | ... | 789,082 0 | 9,360 | ... | ... | 46,474 |
| **Aden and Red Sea—** | | | | | | | |
| Aden salt ... ... ... | 810,210 0 | 33,009 | 843,219 0 | 127,300 | 187,017 | 147,708 | 32,950 |
| Salif salt ... ... ... | ... | ... | ... | ... | ... | ... | ... |
| Salif rock salt ... ... | ... | ... | ... | ... | ... | ... | ... |
| Hawayah salt ... ... | ... | ... | .. | ... | .. | ... | ... |
| Massawah salt ... . | 468,341 0 | 77,211 | 545,552 0 | 62,550 | 185,111 | 107,900 | 1,970 |
| **Muscat and Persian Gulf—** | | | | | | | |
| Muscat, Lingah and Hanjam salt. | ... | ... | ... | ... | .. | .. | ... |
| Muscat, Lingah and Hanjam rock salt | ... | .. | ... | ... | . | . | ... |
| **British India—** | | | | | | | |
| Bombay salt ... ... | ... | .. | ... | 1,868 | ... | 104,730 | ... |
| Madras salt ... ... | 24,100 0 | ... | 24,100 0 | . | .. | ... | ... |
| Tuticorin salt .. ... | 40,868 0 | ... | 40,868 0 | 800 | ... | ... | 1,600 |
| Kayalpatnam salt ... | ... | ... | ... | ... | 659 | 659 | ... |
| Total ... | 3,726,568 0* | 110,220 | 3,836,788 0 | 326,768 | 498,836 | 485,497 | 184,336 |

Mds.

Written off during the half-month—

Wastage in Sulkes golas ... .. ... ... ... 4,322

Abandoned and destroyed ... ... ... ... ... 454

In transit—

Liverpool salt ... ... ... ... ... ... ... ... ... ... 14,180

Aden salt ... ... ... ... ... ... ... ... ... ... 2,300

* Besides 126,761 maunds are in the private licensed salt warehouses at Calcutta

R. R. SAKSENA,

*Assistant Collector of Customs for Imports.*

CALCUTTA CUSTOM HOUSE, *the 7th July 1923.*

Printed at the Bengal Government Press, Alipore, and published by the Bengal Secretariat Book Depôt, Writers' Buildings, in the City of Calcutta, on the 11th July 1923.

**Statement of weekly gauge-readings on the river Ganges at Rampur-Boalia for the week ending 23rd June 1923.**

| Date. | Hour. | Height of surface above zero of P.W.D. datum. | Height of surface above P. W. D. datum. | Height of surface above P. W. D. datum on the same date last year. | Remarks. |
|---|---|---|---|---|---|
| 1923. | | | | | |
| 17th June ... | 7 A.M. | 40 30 | 40·30 | 41·75 | P. W. D datum 6 25 feet above Kidderpore old dock sill. |
| 18th " ... | 7 " | 40·80 | 40 80 | 42 20 | |
| 19th " ... | 7 " | 41·20 | 41·20 | 42 30 | |
| 20th " ... | 7 " | 41 60 | 41 60 | 42 60 | B. M. on Rajshahi College step 64·93. |
| 21st " ... | 7 " | 42 10 | 42 10 | 42 70 | |
| 22nd " ... | 7 " | 42 50 | 42·50 | 42 75 | Value of zero = 0·00 P W D. |
| 23rd " ... | 7 " | 42 90 | 42·90 | 42 90 | |

| | | Old value | According to P W D datum |
|---|---|---|---|
| The previous year | Highest water-level ... | on 15th September 1922 ... | 61 75 |
| Ditto | Lowest " ... | on 4th May 1923 | 35 80 |
| Record | Highest " ... | 69 2) on 26th August 1870 .. | 64 41 |
| Do. | Ditto " ... | 69 08 on 9th September 1880 ... | 64 27 |
| Do. | Ditto " ... | 68 30 on 25th August 1906 .. | 63 47 |
| Do | Ditto " ... | 68 21 on 26th August 1890 . | 63 10 |
| Do | Lowest " .. | 37 63 on 25th April 1884 ... | 32 82 |
| Do | Ditto " ... | 38 1d on 14th and 15th April 1883 ... | 33 32 |
| Do | Ditto " ... | 39 02 on 21st and 22nd April 1897 ... | 34 21 |
| Do | Ditto " ... | 39 26 on 6th and 7th May 1908 ... | 34 47 |
| Do | Ditto " | on 9th May 1922 ... | 34 70 |

*N.B.*—The gauge-readings commenced from the 1st August 1887.

JADAB CHANDRA GHOSH, for *Subdivisional Officer,*

BOALIA, *the 23rd June 1923* *I. D., Jangipur.*

---

**Statement of weekly gauge-readings on the rivers Ganges and Brahmaputra at Goalundo for the week ending 23rd June 1923.**

| Month and date | Hour. | Height of surface above or below zero of gauge | Height of surface above mean sea level | Height of surface above mean sea level on same date last year | Remarks. |
|---|---|---|---|---|---|
| 1923. | | | | | |
| 17th June ... | 7 A M | 17 5 | 17 5 | 14 6 | Zero is placed at mean sea-level. |
| 18th " ... | 7 " | 18 2 | 18 2 | 14 9 | The bench mark for the gauge is on a pucca pillar between the passenger ghat and Chandpore ghat |
| 19th " ... | 7 " | 19 4 | 19 4 | 15 4 | |
| 20th " ... | 7 " | 20 1 | 20 1 | 15 8 | |
| 21st " ... | 7 " | 20 3 | 20 3 | 16 2 | |
| 22nd " ... | 7 " | 20 3 | 20 3 | 16 8 | Its reduced level is 26·84. |
| 23rd " ... | 7 " | 20 1 | 20 1 | 17 4 | |

| | | | |
|---|---|---|---|
| The previous year ... ... | Highest water-level .. | 21 6 on 16th August 1922. | |
| Ditto ... ... | Lowest " ... | 4 3 on 11th March 1923. | |
| Record (H F in Brahmaputra and Ganges) ... .. | Highest " .. | 25 75 on 28th August 1906 | |
| Record (average flood in Brahmaputra and Ganges) ... | Ditto " .. | 25 74 on 30th and 31st August 1824 | |
| Record (H F in Brahmaputra and Ganges) ... ... | Ditto " ... | 25 66 on 11th to 17th and 31st August 1889 and on 1st to 3rd September 1889 | |
| Record (H. F. in Brahmaputra only) ... | Ditto " ... | 25 66 on 31st July 1906. | |
| Record ... ... | Lowest " .. | 1 0 on 8th February 1914. | |
| Do. ... ... | Ditto " ... | 2 42 on 18th March 1908. | |
| Do. .. .. | Ditto " ... | 2 91 on 21st to 24th February 1884 and 8th to 9th March 1884. | |
| Do. ... ... | Ditto " ... | 3 16 on 9th to 11th March 1885 | |
| Do. ... ... | Ditto " ... | 3·16 on 16th, 17th and 29th to 31st March 1901 | |

*N.B.*—The gauge-readings commenced from 3rd October 1909

Z. HOSSAINE, for *Subdivisional Officer,*

FARIDPUR, *the 26th June 1923.* *P. W. D., Faridpur.*

[illegible] showing the gauge-readings at [illegible]
Surigunge for the week ending [illegible]

| Date. | At 7 A.M. | At highest water. | | At lowest water. | | At 4 P.M. | Remarks. |
|---|---|---|---|---|---|---|---|
| | | Time. | Readings. | Time. | Readings. | | |
| 1923. 10th June | 58·6 | 7-10 | 58·65 | 14-10 | 57·5 | 58·0 | [illegible] |
| 11th „ ... | 58·4 | 7-55 | 58·6 | 15-0 | 57·4 | 57·95 | [illegible] |
| 12th „ ... | 58·2 | 8-40 | 58·5 | 15-55 | 57·45 | 57·8 | [illegible] |
| 13th „ ... | 58·35 | 9-30 | 59·4 | 16-40 | 57·9 | 58·0 | [illegible] |
| 14th „ ... | 58·35 | 10-30 | 59·6 | 17-30 | 58·2 | 58·4 | [illegible] |
| 15th „ ... | 58·4 | 11-20 | 59·8 | 18-20 | 58·4 | 58·6 | [illegible] |
| 16th „ ... | 58·5 | 12-12 | 59·7 | 6-10 | 58·3 | 58·8 | [illegible] |

*Notable high and low water-levels of previous years.*

| | | | | | | |
|---|---|---|---|---|---|---|
| | | | | | High | |
| 27th August | 1906 | ... | ... | .. | 70·5 | Taken at high tide |
| 5th September | 1909 | ... | ... | ... | 67·86 | |
| 10th August | 1910 | ... | ... | ... | 69·86 | |
| 1st „ | 1911 | ... | ... | ... | 68·46 | |
| 13th „ | 1912 | ... | ... | ... | 67·16 | |
| 31st „ | 1915 | ... | ... | ... | 69·7 | |
| 18th „ | 1916 | ... | ... | ... | 68·1 | |
| 12th „ | 1917 | ... | ... | ... | 67·1 | |
| 31st „ | 1918 | ... | ... | ... | 69·12 | |
| 2nd „ | 1919 | ... | ... | ... | 66·8 | |
| 8th September | 1920 | ... | .. | .. | 66·9 | |
| 28th July | 1921 | ... | ... | ... | 68·4 | |
| 10th August | 1922 | ... | ... | ... | 68·00 | |
| | | | | | Low. | |
| 22nd February | 1907 | ... | ... | ... | 51·06 | Taken at low tide |
| 15th „ | 1908 | ... | ... | ... | 51·06 | |
| 12th March | 1912 | .. | ... | .. | 51·06 | |
| 8th „ | 1914 | ... | ... | ... | 50·60 | |
| 22nd February | 1915 | ... | ... | ... | 50·80 | |
| 15th „ | 1916 | ... | ... | ... | 50·60 | |
| 3rd March | 1917 | ... | .. | ... | 51·0 | |
| 21st February | 1918 | ... | .. | ... | 51·40 | |
| 26th „ | 1919 | ... | ... | ... | 50·4 | |
| 19th „ | 1920 | ... | ... | ... | 50·9 | |
| 19th „ | 1921 | ... | ... | ... | 50·9 | |
| 8th March | 1922 | ... | ... | ... | 51·05 | |

*N B.*—Zero of the gauge at Dacca water-works = −48·51 with reference to P. W. D. datum

B. L. SUBA[illegible]WAL, [illegible]*ecutive Engineer,*
*Khulna Division.*

CALCUTTA, *the 22nd June 1923.*

Printed at the Bengal Government Press, Alipore, and published by the Bengal Secretariat Stock Depôt, Writers' Buildings, in the City of Calcutta, on the 4th July 1923.

REGISTERED No. C207. No. 29 of 1923.

# The Calcutta Gazette

WEDNESDAY, JULY 18, 1923.

CONTENTS


| | Page |
|---|---|
| PART I.—Orders and Notifications by the Governor of Bengal, the Government of Bengal, the High Court, Government Treasury, etc. | 961—996 |
| PART IA.—Orders and Notifications by the Government of India | 219—220 |
| PART IB.—Educational Notices | 493—580 |
| PART II.—Advertisements | 823—850 |
| PART III.—Acts of the Bengal Legislative Council— | |
| Bengal Act III of 1923—The Calcutta Municipal Act, 1923 | 13—370 |
| PART IV.—Bills introduced in the Bengal Legislative Council, Reports of Select Committees presented or to be presented to that Council, and Bills published before introduction in that Council | Nil |
| PART V.—Acts of the Indian Legislature assented to by the Governor-General | Nil |
| PART VI.—Bills introduced in the Council of State and Legislative Assembly, Reports of Select Committees presented to the Council and Assembly and Bills published under Rule 18 of the Indian Legislative Rules | Nil |
| SUPPLEMENT No 29— | |
| Circular and Eastern Canals—Daily gauge-readings—List of Government Promissory Notes—Major and Minor Works—Calcutta University Budget Estimates—Calcutta Improvement Trust—Vital Statistics—Weekly gauge-readings—Weather and Crop Report—Prices current | 853—1071 |


## PART I.

### *Orders and Notifications by the Governor of Bengal, the Government of Bengal, the High Court, Government Treasury, etc.*

### ORDERS BY THE GOVERNOR OF BENGAL.

*No. 1748L., dated Calcutta, the 14th July, 1923.*—In exercise of the power conferred by section 72B, sub-section (2), of the Government of India Act (5 and 6 Geo. V, c. 61; 6 and 7 Geo. V, ch. 37; and 9 and 10 Geo. V, ch. 101), His Excellency the Governor has appointed Wednesday, the 15th August, 1923, at 3 P.M., as the time, and the Council Chamber in the Town Hall, Calcutta, as the place, for a meeting of the Bengal Legislative Council.

C. TINDALL,

*Secretary to the Government of Bengal and*
*Secretary to the Bengal Legislative Council.*

### ORDERS BY THE GOVERNMENT OF BENGAL.

No. 7264A.

#### APPOINTMENTS AND TRANSFERS.

GENERAL.—*No. 7154A.—The 10th July 1923.*—Mr. H. M. Veitch, I.C.S., District and Sessions Judge, Bankura, is appointed to be District and Sessions Judge, Burdwan.

Bankura.
Burdwan.

*No. 7157A.—The 10th July 1923.*—Mr. Iradatulla, officiating First Additional District and Sessions Judge, Bakarganj, is appointed to act, until further orders, as District and Sessions Judge, Bankura.

Bakarganj.
Bankura.

*No. 7160A.—The 10th July 1923.*—Mr. Abul Muzaffar Ahmad, officiating Second Additional District and Sessions Judge, Bakarganj, is appointed to act, until further orders, as First Additional District and Sessions Judge of that district.

Bakarganj.

*No. 7162A.—The 10th July 1923.*—Mr. Narendra Nath Lahiri, Subordinate Judge and Assistant Sessions Judge, 24-Parganas, is appointed temporarily to act as Second Additional District and Sessions Judge, Bakarganj.

24-Parganas.
Bakarganj.

*No. 7168A.—The 10th July 1923.*—Mr. D. L. Vaughan-Stevens, I.C.S., officiating First Additional District and Sessions Judge, Mymensingh, is appointed to act, until further orders, as District and Sessions Judge of that district.

Mymensingh.

*No. 7170A.—The 10th July 1923.*—Mr. Satyendra Nath Modak, I.C.S., officiating Second Additional District and Sessions Judge, Mymensingh, is appointed to act, until further orders, as First Additional District and Sessions Judge of that district.

Mymensingh.

*No. 7172A.—The 10th July 1923.*—Mr. Satindra Nath Guha, Subordinate Judge and Assistant Sessions Judge, Bakarganj, is appointed to act, until further orders, as Second Additional District and Sessions Judge, Mymensingh.

Bakarganj.
Mymensingh.

*No. 7195A.—The 13th July 1923.*—Babu Pran Kumar Mukharji, Deputy Magistrate and Deputy Collector, Bakarganj, is transferred to the Patuakhali subdivision of that district.

Bakarganj.

*No. 7228A.—The 13th July 1923.*—Babu Madhab Chandra Sarkar, B.A., son of the late Babu Behari Lal Saha Sarkar, is appointed to be a Deputy Magistrate and Deputy Collector, on probation.

*No. 7230A.—The 13th July 1923.*—The gentlemen named below are appointed to be Sub-Deputy Collectors on probation:—

Babu Sailesh Chandra Chaudhuri, M.A., son of Babu Mahes Chandra Chaudhuri.
" Saileswar Sinha Ray, B.A., son of Babu Abinash Chandra Sinha Ray.
" Amiya Chandra Mitra, M.A., son of Babu Adhar Chandra Mitra.
Maulvi Ahmad-ul-Alam Saiyid Abdul Quadir, B.A., son of Maulvi Muhammad Abdul Aziz.

POLICE.—*No. 7201A.—The 11th July 1923.*—Mr. T. C. Simpson, Deputy Inspector-General of Police, on leave, is appointed to act as Inspector-General of Police, Bengal, during the absence, on leave, of Mr. R. B. Hyde, or until further orders.

## LEAVE.

GENERAL.—*No. 7130A.—The 10th July 1923.*—Babu Nihar Ranjan Banarji, Deputy Magistrate and Deputy Collector, is allowed leave for three months and twelve days, viz., commuted furlough on medical certificate for two months, under article 301 (*c*) of the Civil Service Regulations, and the Government of India, Finance Department, resolution No. 2099C.S.R., dated the 27th November 1920, and ordinary furlough on half average pay for the remaining period under article 325 of those Regulations, in extension of the leave granted to him under the orders of the 10th May 1923.

*No. 7134A.—The 10th July 1923.*—Mr. H. E. Spry, I.C.S., has been granted by the High Commissioner for India an extension of leave on half average pay for twenty months.

*No. 7144A.—The 10th July 1923.*—In supersession of the orders of the 22nd May 1923, Maulvi Ahmed Meah, Deputy Magistrate and Deputy Collector, on probation, Bakarganj, is allowed leave on average pay for fifteen days (including privilege leave for one day at credit) from the 14th to the 28th April 1923, under rule 81 (*b*) (*ii*) of the Fundamental Rules.

Bakarganj.

*No. 7151A.—The 10th July 1923.*—Mr. P. E. Cammiade, I.C.S., District and Sessions Judge, Burdwan, is allowed leave on average pay (including one month and twenty-six days on account of privilege leave), under article 81 (*b*) (*i*) of the Fundamental Rules, from the 1st August 1923 to the 12th March 1924, inclusive.

Burdwan.

*No. 7165A.—The 10th July 1923.*—Mr. H. C. Maitland, I.C.S., District and Sessions Judge, Mymensingh, is allowed leave for twenty-eight months from the 7th August 1923 or any subsequent date on which he may avail himself of it, viz, leave on average pay for eight months (including one month and eighteen days on account of privilege leave) under article 81 (*b*) (*i*) of the Fundamental Rules, and leave on half average pay for the remaining period under article 81(*d*) of those rules.

**Mymensingh.**

*No. 7186A.—The 11th July 1923.*—Babu Manoranjan Das Gupta, Sub-Deputy Collector and Circle Officer, Bakarganj, is allowed leave on average pay for three months (the entire period being on account of privilege leave at his credit), under article 81 (*b*) (*ii*) of the Fundamental Rules, with effect from the 14th July 1923 or any subsequent date on which he may avail himself of it.

**Bakarganj.**

*No 7189A.—The 11th July 1923*—Babu Dwijendra Nath Sen, Deputy Magistrate and Deputy Collector, Burdwan, is allowed leave on average pay for twenty-six days (the entire period being on account of privilege leave at his credit), under article 81 (*b*) (*ii*) of the Fundamental Rules, with effect from the 22nd July 1923 or any subsequent date on which he may avail himself of it

**Burdwan.**

*No. 7216A.—The 12th July 1923.*—Mr Guru Saday Dutt, I.C.S., Magistrate and Collector, Bankura, is allowed leave on average pay for one day, under rule 81 (*b*) (*i*) of the Fundamental Rules, in extension of the leave granted to him under the orders of the 29th May 1923.

**Bankura.**

*No. 7239A.—The 13th July 1923*—Mr Paresh Nath Roy Chaudhuri, District and Sessions Judge, is allowed leave on average pay for two months on medical certificate, under article 81 (*b*) (*ii*) of the Fundamental Rules, in extension of the leave granted to him under the orders of the 3rd January 1923.

*No. 7246A—The 13th July 1923.*—Babu Akhil Chandra Gangali, Sub-Deputy Collector, is allowed leave on average pay for two months (the entire period being on account of privilege leave at his credit), under article 81 (*b*) (*ii*) of the Fundamental Rules, in extension of the leave granted to him under the orders of the 4th May 1923

POLICE.—*No. 7199A—The 11th July 1923*—Mr R B. Hyde, Inspector-General of Police, Bengal, is allowed leave on average pay for eight months, under article 81 (*b*) (*i*) of the Fundamental Rules, and leave on half average pay for one year five months and four days or the amount due on the date of relief under article 81 (*d*) of those rules, with effect from the 1st August 1923 or any subsequent date on which he may avail himself of it

**Calcutta.**

*No 7206A.—The 11th July 1923*—Mr E Brown, Deputy Superintendent of Police, Chittagong, is allowed privilege leave for four months, under article 260 of the Civil Service Regulations, with effect from the date on which he may avail himself of it.

**Chittagong.**

L. BIRLEY,
*Chief Secretary to the Government of Bengal.*

## JUDICIAL DEPARTMENT.

No. 7265A.

### POWERS.

*No. 7138A.—The 10th July 1923.*—Maulvi Abul Khair Muhammad Abdul Latif, Sub-Deputy Magistrate, Chandpur, Tippera, is vested with the powers of a Magistrate of the second class.

**Tippera.**

L. BIRLEY,
*Chief Secretary to the Government of Bengal.*

### APPOINTMENTS AND TRANSFERS.

*No. 4061J.—The 9th July 1923.*—In exercise of the powers conferred by sections 14 and 15 and the proviso to section 357 of the Code of Criminal Procedure, 1898 (Act V of 1898), the Governor in Council is pleased—

(*a*) to confer upon Babu Satya Pradip Pal the powers of a Magistrate of the third class, in the district of the 24-Parganas, for a period of three years from the 28th July 1923,

**24-Parganas.**

(*b*) to direct him to sit as a member of the Palta Bench in the said district, and

(*c*) to direct him to take down evidence in the English language.

*No. 4081J.—The 10th July 1923.*—In exercise of the powers conferred by sections 14 and 15 and the proviso to section 357 of the Code of Criminal Procedure, 1898 (Act V of 1898), the Governor in Council is pleased—

(*a*) to confer upon each of the gentlemen named below the powers of a Magistrate of the third class, in the district of Murshidabad, for a period of three years from the date of this notification,

**Murshidabad.**

(*b*) to direct him to sit as a member of the Azimganj bench in the said district, and

(*c*) to direct him to take down evidence in the English language —

Babu Sripada Sen Gupta, L M.S.
" Barada Sankar Thakur

*No. 4084J.—The 10th July 1923.*—In exercise of the powers conferred by sections 14 and 15 and the proviso to section 357 of the Code of Criminal Procedure, 1898 (Act V of 1898), the Governor in Council is pleased—

(*a*) to confer upon each of the gentlemen named below the powers of a Magistrate of the third class, in the district of Howrah, for a period of three years from the date of this notification,

**Howrah.**

(*b*) to direct him to sit as a member of the Amta bench in the said district, and

(*c*) to direct him to take down evidence in the English language :—

Babu Ranadhir Chatarji.
" Panchanan Changdar

*No. 4093J - The 11th July 1923.*—Babu Rabindra Kumar Basu, officiating munsif of Vishnupur, in the district of Bankura, is appointed to act, until further orders, as a munsif in the district of the 24-Parganas, to be ordinarily stationed at Barasat

**Bankura. 24-Parganas.**

*No. 4095J.—The 11th July 1923.*—Babu Mayataru Haldar, munsif of Barasat, in the district of the 24-Parganas, is appointed to be a munsif in the district of Bankura, to be ordinarily stationed at Vishnupur, and is vested with the functions of a District Court under section 26 sub-section (*1*) of Act VII of 1889, within the local limits of the Vishnupur munsifi.

**24-Parganas. Bankura.**

*No. 4099J.—The 12th July 1923.*—In exercise of the powers conferred by sections 14 and 15 of the Code of Criminal Procedure, 1898 (Act V of 1898), the Governor in Council is pleased—

(*a*) to confer upon Babu Jogendra Narayan Sanyal the powers of a Magistrate of the third class, in the district of Bogra, for a period of three years from the date of this notification, in respect to such cases as may be made over to him within the limits of the Sadar subdivision of the said district, and

**Bogra.**

(*b*) to direct that he shall, in addition to sitting singly, sit as a member of the Sherpur bench in the said district.

*No. 4111J.—The 12th July 1923.*—In exercise of the powers conferred by sections 14 and 15 of the Code of Criminal Procedure, 1898 (Act V of 1898), the Governor in Council is pleased—

(*a*) to confer upon Babu Jatindra Kumar Ghosh the powers of a Magistrate of the third class, in the district of the 24-Parganas, for a period of three years from the 15th July 1923, and

**24-Parganas.**

(*b*) to direct him to sit as a member of the Baruipur Bench in the said district.

*No. 4115J.—The 12th July 1923.*—In exercise of the powers conferred by sections 14 and 15 of the Code of Criminal Procedure, 1898 (Act V of 1898), the Governor in Council is pleased—

(*a*) to confer upon Maulvi Karim Niwaz Khan the powers of a Magistrate of the third class, in the district of Pabna, for a period of three years from the 24th July 1923, and

**Pabna.**

(*b*) to direct him to sit as a member of the Shahzadpur Bench in the said district.

*No. 4149J.—The 14th July 1923.*—In exercise of the powers conferred by sections 14 and 15 and the proviso to section 357 of the Code of Criminal Procedure, 1898 (Act V of 1898), the Governor in Council is pleased—

(*a*) to confer upon each of the gentlemen named below the powers of a Magistrate of the third class, in the district of the 24-Parganas, for a period of three years from the date of this notification,

**24-Parganas.**

(*b*) to direct him to sit as a member of the Sealdah Independent Bench in the said district, and

(*c*) to direct him to take down evidence in the English language—

(1) Babu Krishna Das Banarji.
(2) „ Kanak Kanti Ray Chaudhuri.

*No. 4117J.—The 12th July 1923.*—In exercise of the powers conferred by sections 14 and 15 and the proviso to section 357 of the Code of Criminal Procedure, 1898 (Act V of 1898), the Governor in Council is pleased—

(*a*) to confer upon Babu Kedar Nath Ghosh the powers of a Magistrate of the third class, in the district of Rangpur, for a period of three years from the date of this notification, in respect to such cases as may be made over to him within the limits of the Nilphamari subdivision of the said district,

**Rangpur.**

(*b*) to direct that he shall, in addition to sitting singly, sit as a member of the Saidpur bench in the said district, and

(*c*) to direct him to take down evidence in the English language.

He is also empowered to take cognizance, under section 190 (*1*) (*a*) and (*b*) of the Code of Criminal Procedure, of cases under section 34 of Act V of 1861 and under Bengal Public Gambling Act, 1867 (Bengal Act II of 1867), occurring within the Saidpur town to which the said Acts have been extended.

## LEAVE.

*No 4065J.—The 22nd June 1923.*—Babu Jagat Nath Basu Ray, munsif, under orders of transfer to Tamluk, in the district of Midnapore, is allowed leave on half average pay on medical certificate for three months, under article 81 (*c*) (*i*) of the Fundamental Rules and under the Government of India, Finance Department, order No 758C.S.R., dated the 11th July 1922, in extension of the leave granted to him under the orders of the 4th April 1923.

**Midnapore.**

*No. 4066J.—The 28th June 1923.*—Babu Jatindra Kumar Basu, munsif of Munshiganj, in the district of Dacca, now employed at the Sadar station, is allowed leave on average pay for twenty days (entirely on account of privilege leave on full pay at his credit), under article 81 (*b*) (*ii*) of the Fundamental Rules, with effect from the 11th June 1923.

**Dacca.**

*No. 4067J.—The 28th June 1923.*—Babu Surendra Nath Palit, additional munsif of Khulna, is allowed leave on half average pay for twenty days, under article 81 (*d*) of the Fundamental Rules, with effect from the 25th June 1923

**Khulna.**

*No. 4068J.—The 30th June 1923.*—Maulvi Altaf Ahmad, munsif of Midnapore, is allowed leave on average pay for one day (on account of privilege leave on full pay at his credit), under article 81 (*b*) (*ii*) of the Fundamental Rules and leave on half average pay for four days, under article 81 (*d*) of those rules, in extension of the leave granted to him under the orders of the 10th May 1923.

**Midnapore.**

*No. 4089J.—The 11th July 1923.*—In modification of the orders contained in notification No. 2353J., dated the 14th April 1923, Mr. Banamali Sen, Subordinate Judge and Assistant Sessions Judge, now employed as Additional District and Sessions Judge of Tippera and Chittagong, is allowed leave on average pay for three months with effect from the 2nd March 1923, under the proviso to article 81 (*b*) (*ii*) of the Fundamental Rules.

**Tippera. Chittagong.**

*No. 4119J.—The 13th July 1923.*—Babu Tej Chandra Mitra, Subordinate Judge of Birbhum, is allowed leave on average pay for one month on medical certificate under article 81 (*b*) (*ii*) of the Fundamental Rules, with effect from the 10th June 1923.

**Birbhum.**

*No. 4136J. -The 14th July 1923.*—In supersession of the orders contained in notification No. 2937J., dated the 21st May 1923, Maulvi Abdul Khalique, Subordinate Judge, Dacca, is allowed commuted furlough from 18th April 1923 to the 15th August 1923, both days inclusive, under article 301 (*a*) and Government of India, Finance Department, Resolution No. 2099C.S.R., dated the 27th November 1920.

**Dacca.**

H. P. DUVAL,
*Secretary to the Government of Bengal.*

---

## NOTIFICATIONS.

*No. 4107J.—The 12th July 1923.*—In exercise of the power conferred by section 65 of the Bengal Village Self-Government Act, 1919 (Bengal Act V of 1919), the Governor in Council is pleased to appoint the following members of the union boards, mentioned below, during their term of office as such members, to be union benches within the jurisdiction of the union boards of which they are respectively members for the purposes of that section —

**Tippera.**

**Names of the members of the union boards to constitute union benches in the Sadar subdivision of the district of Tippera.**

| Name of police-station | Name of union board | Names of members |
|---|---|---|
| 1. Chanddagram ... | Gunabati ... | 1 Munshi Akamat Ali.<br>2 Babu Radha Charan Pal<br>3. Maulvi Dewan Ali. |
| 2. Muradnagar ... | Ramchandrapur | 1. Maulvi Maniruddin.<br>2 „ Neajuddin Sarkar.<br>3 Babu Jagabandhu Saha. |
| 3. Ditto . | Nabipur ... | 1. Babu Hari Mohan Poddar.<br>2. „ Bepin Chandra Roy.<br>3. Maulvi Mafizuddin Sarkar. |
| 4. Ditto ... | Dhamgur ... | 1 Babu Kartic Chandra Roy.<br>2 M. Abed Ali Sarkar of Kharail.<br>3 M. Abed Ali Sarkar of Sidheshwari. |
| 5. Dabidwar ... | Rajameher ... | 1. Maulvi Syed Ali Bhuia.<br>2. „ Sadim Ali Bhuia.<br>3. Babu Purna Chandra Chakrabarty. |
| 6. Ditto ... | Subil ... | 1. Babu Sashi Mohan Deb.<br>2. Maulvi Abdul Aziz Bhuia<br>3. „ Amjad Ali Bhuia. |
| 7. Daudkandi ... | Goalmari ... | 1. Munshi Abdul Aziz.<br>2. Babu Hari Mohan Sarkar.<br>3. Munshi Reazuddin Chaudhuri. |

*No. 4132J.—The 13th July 1923.*—In exercise of the power conferred by section 65 of the Bengal Village Self-Government Act, 1919 (Bengal Act V of 1919), the Governor in Council is pleased to appoint the following members of the union boards mentioned below, during their term of office as such members, to be union benches within the jurisdiction of the union boards of which they are respectively members for the purposes of that section :—

**Tippera.**

**Names of the members of union boards to constitute union benches in the district of Tippera.**

| Subdivision | Police-station | Name of union board | Names of members |
|---|---|---|---|
| Brahmanbaria ... | Nabinagar ... | Bidyakut ... | Babu Ambica Charan Roy Barman.<br>Babu Kunja Behari Barman Roy.<br>Munshi Chand Meah. |
| Sadar ... | Kotwali ... | Jagannathpur | Babu Kshetra Mohan Nath Bhowmic.<br>Babu Bepin Behari Jotishastri.<br>Munshi Afsaruddin.<br>„ Ali Meah.<br>Babu Jagatbandhu Saha. |

H. P. DUVAL,
*Secretary to the Government of Bengal.*

## ERRATUM.

*No. 4101J.—The 14th July 1923.*—In notification No. 3688J, dated the 25th June 1923, published at page 867, Part I of the *Calcutta Gazette* of the 4th July 1923, *for* the words "Union Bench" in line 5, *read* "Union Court."

H. P. DUVAL,
*Secretary to the Government of Bengal.*

## LOCAL SELF-GOVERNMENT DEPARTMENT.

### NOTIFICATIONS.

**Minister in charge: The Hon'ble Sir S. N. Banarji, Kt.**

**Hooghly.**

*No. 2191M.—The 13th July 1923.*—In exercise of the power conferred by section 308, read with section 319 of the Bengal Municipal Act, 1884 (Bengal Act III of 1884), the Government of Bengal (Ministry of Local Self-Government) are pleased to sanction the following plan for lighting a portion of the Hooghly-Chinsura Municipality with electricity:—

*Plan*

2. The portion of the municipality which it is proposed to light with electricity is defined below:—

*South*—Sham Babu's ghat road, Sil's lane, Daspara lane, Kamarpara road, Gobordhan Sil's lane, Nabin Teli's lane, Parbati lane up to its junction with Khirkee lane and Khirkee lane from the said junction to Kamarpara road including all holdings situated on either side of these roads and lanes

*West*—Tolafatak road, Phulpukar road, Khakrajole, Mullickasim hât road, Peepulpati road, Chak road, Bally road, Kathghara lane, Phulpukar lane, Grand Trunk road, Shahagunge road (up to its junction with Shibtala ghat lane and Shibtala lane), including all holdings situated on either side of these roads and lanes

*North*—Bokultala lane with holdings on its either side

*East*—River.

3. Four hundred and fifty-five electric lamps will be installed, as shown in the accompanying statement. The Commissioners have decided to enter into an agreement with Messrs Nursingh Sahay Madangopal for the installation of these lamps and for their maintenance at the annual rates of Rs. 34-3, Rs 26-9 and Rs 23-12 for each lamp of 50, 32 and 25 candle power respectively, or at a total cost of Rs. 12,632 per annum.

4. The Government of Bengal (Ministry of Local Self-Government) are further pleased to sanction, under clause (*e*) of section 86 of the said Act, the proposal of the Municipal Commissioners at a meeting to meet the charge to be incurred on account of lighting the aforesaid area by imposing an annual lighting rate of 3 per cent. on the annual value of holdings situated within the area to be lighted as defined in paragraph 2 of this notification. The income to be derived from the lighting tax from the aforesaid area is estimated to be Rs. 13,000 a year

**Statement showing the number of lights to be lighted in each lane and street of the Hooghly-Chinsura Municipality.**

| | 50 candle power | 32 candle power | 25 candle power |
|---|---|---|---|
| **WARD No. 1.** | | | |
| Sibtala ... ... ... | ... | ... | 1 |
| Bakultala ... ... ... | ... | 1 | 1 |
| Shahagunge road ... ... | ... | 11 | ... |
| Grand Trunk road ... .. | 1 | 10 | ... |
| Kalitala ... ... ... | 1 | ... | 2 |
| | 2 | 22 | 4 |
| **WARD No. 2.** | | | |
| Bally road (including Lat ghat) ... | 1 | 7 | 1 |
| Boral lane ... ... ... | ... | 4 | ... |
| Napitpara ... ... ... | ... | ... | 2 |
| Katghara ... ... ... | ... | 3 | 1 |
| Palpukar ... ... ... | ... | 3 | 1 |
| Chak road ... ... ... | ... | 8 | 1 |
| Strand road ... ... ... | 10 | ... | ... |
| Smith ghat ... ... ... | ... | 1 | ... |
| B. De road ... ... ... | 1 | 4 | ... |
| Barodwari road ... ... | 1 | 3 | ... |

| | 50 candle power | 32 candle power | 25 candle power |
|---|---|---|---|
| **WARD NO. 2—*concld.*** | | | |
| Mogulpura ... ... .. | ... | 4 | 1 |
| Mahestala lane .. ... ... | ... | ... | 5 |
| Ditto ... ... ... | ... | 1 | ... |
| Dhobapara ... ... ... | ... | ... | 2 |
| Tantipara ... ... ... | ... | ... | 5 |
| Pankhatuli ... ... ... | 1 | 3 | ... |
| | 14 | 41 | 19 |
| **WARD NO 3.** | | | |
| Barodwari road ... .. ... | 1 | 3 | . |
| Cockrell road ... ... ... | 6 | ... | ... |
| Strand road ... .. ... | 15 | ... | ... |
| Ghootiabazar road ... ... ... | 1 | 7 | ... |
| Narain Rais Beir ... ... ... | ... | ... | 6 |
| Jailkhana lane ... ... . | ... | ... | 3 |
| Mallik lane (up to Pine house) ... | ... | 1 | 3 |
| Pyne lane ... ... ... | ... | ... | 3 |
| Jagudaspara ... ... ... | ... | 5 | ... |
| De bye lane ... ... ... | ... | 1 | .. |
| Goalapara .. ... ... | ... | ... | 1 |
| Tamlipara ... ... ... | ... | 5 | 2 |
| Peepulpati road ... ... ... | 1 | 6 | ... |
| Hat road ... . ... | . | 2 | ... |
| Old Hospital road ... ... ... | .. | 6 | ... |
| Kadamtala lane (with bye-lane) ... | ... | 3 | 4 |
| Sujon lane ... ... ... | ... | ... | 2 |
| Babuganj lane (with bye-lane) ... | ... | 5 | 5 |
| Protappore road ... ... ... | ... | 5 | ... |
| Joraghat lane ... ... ... | ... | ... | 4 |
| | 24 | 50 | 33 |
| **WARD NO. 4** | | | |
| Strand road ... ... ... | 6 | ... | ... |
| Machuabazar ... ... ... | 1 | 3 | ... |
| De bye-lane ... ... ... | ... | ... | 1 |
| Mogultuli lane ... ... ... | ... | ... | 6 |
| Mogultuli 2nd lane ... ... | ... | 4 | ... |
| Armanitala ... ... ... | ... | ... | 2 |
| Crooked lane ... ... ... | ... | 4 | ... |
| Hossain lane ... ... ... | .. | 2 | 3 |
| Rajbati road (with Kutchery road) ... | 6 | 4 | ... |
| Hat road ... ... ... | ... | 1 | ... |
| Khagrajole road ... ... ... | 2 | 7 | ... |
| Jugipara lane ... ... ... | ... | 1 | 3 |
| Dr. lane ... ... ... | ... | ... | 2 |
| Matijhil lane ... ... ... | ... | ... | 4 |
| Amratala lane ... ... ... | ... | 2 | ... |
| Mallik lane ... ... ... | ... | 3 | ... |
| Kharuabazar ... ... ... | 4 | ... | ... |
| Mearbeir road ... ... ... | ... | 4 | ... |
| Fulpukur road ... ... ... | ... | 4 | ... |
| | 19 | 39 | 21 |
| **WARD NO 5.** | | | |
| Nishan ghat ... ... ... | 1 | ... | ... |
| Road near Commissioner's quarters ... | 3 | ... | ... |
| Hospital road ... ... ... | 3 | 1 | ... |
| Front of Court (north) ... ... | 1 | 2 | ... |
| South of Court ... ... ... | 1 | ... | ... |

| | 50 candle power | 32 candle power | 25 candle power |
|---|---|---|---|
| **WARD NO. 5—*concld.*** | | | |
| Avenue road or Barrack Centre road ... | 3 | 1 | ... |
| Badamtala road ... ... ... | 4 | 2 | ... |
| Thakur lane ... ... ... | ... | 2 | 1 |
| Hauzkhana ... ... ... | ... | 4 | ... |
| Panchurais lane ... ... ... | ... | 2 | 1 |
| Madhabitala road from Ghantaghat to Gouranga Theatre ... ... | 8 | 1 | .. |
| Madhabitala bye-lane ... ... | ... | 1 | ... |
| Bollaram lane ... ... ... | 2 | 4 | ... |
| Boarding road ... ... ... | 2 | ... | ... |
| Dhalaghat ... ... ... | 1 | 1 | ... |
| Chowmatha lane with bye-lanes ... | 4 | 11 | ... |
| Beltala ... ... ... | 1 | 1 | ... |
| Dutt's lane with ghat ... .. | 1 | 7 | ... |
| Do. bye-lane ... ... . | ... | .. | 1 |
| Pattak lane ... ... ... | ... | 1 | 4 |
| Pal's lane ... ... ... | ... | 1 | ... |
| Sil's lane with bye-lane ... ... | ... | 4 | 1 |
| Sandeswartala with ghat ... ... | 4 | 4 | ... |
| Ray's lane ... ... ... | .. | 1 | ... |
| Benimadhab lane ... ... | ... | 2 | ... |
| Near Training School ... ... | ... | ... | 1 |
| Kamarpara road ... ... .. | 7 | 10 | 2 |
| Markanda lane ... ... ... | ... | ... | 2 |
| Kamarpara bye-lane ... ... | .. | ... | 2 |
| Brojo Chander 1st lane ... ... | ... | ... | 2 |
| Ditto 2nd lane ... ... | .. | 1 | 2 |
| Bennapukur lane ... ... | ... | ... | 1 |
| Purbati lane .. . | 1 | 1 | .. |
| Panchanantala lane ... ... | ... | .. | 1 |
| Khirkee lane ... ... | | .. | 4 |
| Antarbagan ... ... | . | ... | 3 |
| Suripara ... ... | 6 | 1 | 1 |
| Tolafatak ... ... | 2 | ... | ... |
| | 55 | 66 | 29 |
| **WARD NO 6** | | | |
| Sham Baboo's ghat ... ... | ... | 6 | 1 |
| Do. bye-lane ... ... | ... | ... | 3 |
| Duspara ... ... | ... | ... | 4 |
| Sil's lane ... ... | ... | 2 | 1 |
| | | 8 | 9 |
| Ward No. 1 ... ... | 2 | 22 | 4 |
| Ward No. 2 ... ... | 14 | 41 | 19 |
| Ward No. 3 ... ... | 24 | 50 | 33 |
| Ward No. 4 ... ... | 19 | 39 | 21 |
| Ward No. 5 ... ... | 55 | 66 | 29 |
| Ward No. 6 ... ... | ... | 8 | 9 |
| | 114 | 226 | 115 |

| | | |
|---|---|---|
| 114 | ... ... ... | 50 candle power. |
| 226 | ... ... ... | 32 " " |
| 115 | ... ... ... | 25 " " |
| 455 | total lights. | |

**Minister in charge : The Hon'ble Sir S. N. Banarji, Kt.**

**Midnapore.**

*No. 2196M.—The 13th July 1923*—In exercise of the power conferred by section 27 of the Bengal Municipal Act, 1884 (Bengal Act III of 1884), the Government of Bengal (Ministry of Local Self-Government) are pleased to appoint Babu Kalidas Dutta to be a Commissioner of the Chandrakona Municipality, in the district of Midnapore, *vice* Babu Dhirendra Nath Dutta, deceased.

**Minister in charge : The Hon'ble Sir S. N. Banarji, Kt.**

**Hooghly.**

*No. 2228M.—The 14th July 1923*—The following draft of a notification which the Government of Bengal (Ministry of Local Self-Government) intend to issue in exercise of the power conferred by clause (*a*) of section 2 of the Calcutta Hackney Carriage Act, 1919 (Bengal Act I of 1919), is published, as required by the second proviso to that section, for the information of persons likely to be affected thereby.

2. The draft will be taken into consideration on the 4th September 1923, and any objection or suggestion with regard thereto which may be received by the undersigned from any rate-payer or inhabitant of the Bhadreswar Municipality before that date will be duly considered :—

*Draft notification.*

In exercise of the power conferred by clause (*a*) of section 2 of the Calcutta Hackney Carriage Act, 1919 (Bengal Act I of 1919), the Government of Bengal (Ministry of Local Self-Government) are pleased to extend to the Bhadreswar Municipality, in the district of Hooghly, all the provisions of the said Act except sub-section (*1*) of section 6.

**Minister in charge: The Hon'ble Sir S. N. Banarji, Kt.**

**Burdwan.**

*No. 2225M.—The 14th July 1923*—In exercise of the power conferred by section 86 (*a*) of the Bengal Municipal Act, 1884 (Bengal Act III of 1884), and in accordance with the recommendation of the Commissioners of the Katwa Municipality, in the district of Burdwan, made at a meeting, the Government of Bengal (Ministry of Local Self-Government) sanction the levy, by the Commissioners of the said Municipality, of a tax, under section 131 of the Act, on carriages, horses and other animals.

S. W. GOODE,
*Secretary to the Government of Bengal (offg.).*

---

## MEDICAL.

**Minister in charge: The Hon'ble Sir S. N. Banarji, Kt.**

**Calcutta.**

*No. 1808 Medl.—The 10th July 1923.*—Military Assistant Surgeon A. V. Barker, I.M.D., House Surgeon, Presidency General Hospital, Calcutta, is allowed leave on average pay for one month (the entire period being on account of privilege at his credit), under article 100 (*a*) of the Fundamental Rules, with effect from the 3rd July 1923, or from any subsequent date on which he may avail himself of the leave.

**Minister in charge : The Hon'ble Sir S. N. Banarji, Kt.**

**Calcutta.**

*No. 1810Medl.—The 10th July 1923*—Babu Sarat Chandra Roy, officiating Personal Assistant to the Surgeon-General with the Government of Bengal, was granted privilege leave for one month and one day, with effect from the 22nd May 1923, under article 260, Civil Service Regulations (new) and Government of India, Finance Department, order No. 168 C. S. R., dated the 24th February 1919.

**Minister in charge : The Hon'ble Sir S. N. Banarji, Kt.**

*No. 1812Medl.—The 10th July 1923.*—Maulvi Abdur Rahman, Head Assistant, in the office of the Surgeon-General with the Government of Bengal, was appointed to act as Personal Assistant to the Surgeon General with the Government of Bengal, during the absence, on leave, of Babu Sarat Chandra Roy.

**Minister in charge: The Hon'ble Sir S. N. Banarji, Kt.**

**Calcutta.**

*No. 1826Medl.—The 14th July 1923.*—The undermentioned officers are appointed to the Out-patient departments of the Medical College Hospitals, Calcutta, with effect from the 16th July 1923 :—

(1) Rai Dr. Upendranath Brahmachari, M.D., Ph.D., Additional Physician to the Medical College Hospitals

(2) Dr. Karuna Kumar Chatarji, F.R.C.S.I., Additional Surgeon to the Medical College Hospitals.

**Minister in charge : The Hon'ble Sir S. N. Banarji, Kt.**

*No. 1846Medl.—The 14th July 1923.*—Majors A. H. Proctor, D.S.O., M.D., F.R.C.S.E., I.M.S., and W. L. Harnett, M.B., F.R.C.S., I.M.S., are appointed to be Civil Surgeons with effect from the 28th June 1922 and the 1st October 1922, respectively.

S. W. GOODE,
*Secretary to the Government of Bengal (offg.).*

**Orders by the Surgeon-General with the Government of Bengal.**

*No. 10608, dated Calcutta, the 11th July 1923*—Civil Assistant Surgeon Upendra Nath Das is appointed to act temporarily as House Surgeon, Presidency General Hospital, Calcutta, with effect from the 5th July 1923, *vice* Military Assistant Surgeon A. V. Barker.

*No. 10624, dated Calcutta, the 11th July 1923.*—Assistant Surgeon Gokulananda De Anaesthetist, Presidency General Hospital, Calcutta, is granted leave on average pay for one month and three days, under article 81 (*b*) (*ii*) of the Fundamental Rules (without medical certificate), with effect from the 19th June 1923.

*No. 10728, dated Calcutta, the 12th July 1923.*—Assistant Surgeon Krishna Dhan Sinha, 4th Assistant Chemical Examiner, Calcutta, is granted leave on average pay for one month and ten days (the entire period being privilege leave at his credit), under article 81 (*b*) (*ii*) of the Fundamental Rules (without medical certificate), with effect from the date he is relieved of his duties.

*No. 10730, dated Calcutta, the 12th July 1923*—Assistant Surgeon Jitendra Kumar Banerjee is appointed to act as 4th Assistant Chemical Examiner, Calcutta, *vice* Assistant Surgeon Krishna Dhan Sinha.

D. MCCAY, LT.-COL., I.M.S.,
*Surgeon-General with the Government of Bengal (offg.).*

## EDUCATION DEPARTMENT.

### NOTIFICATIONS.

**Minister in charge: The Hon'ble Mr. P. C. Mitter, C.I.E.**

**Jessore.**

*No. 2007Edn.—The 12th July 1923.*—Babu Abinas Chandra Banarji, District Inspector of Schools, Jessore, is allowed leave on average pay for eleven days, with effect from the 1st August 1923, under rule 81 (*b*) (*ii*) of the Fundamental Rules.

**Minister in charge: The Hon'ble Mr. P. C. Mitter, C.I.E.**

**Burdwan Divn.**

*No. 2009Edn.—The 12th July 1923*—Maulvi Abdul Latif, Assistant Inspector of Schools for Muhammadan Education, Burdwan Division, was allowed leave on average pay for two months (including privilege leave for one month and three days at his credit), with effect from the 5th April 1923, under rule 81 (*b*) (*ii*) of the Fundamental Rules.

This cancels notification No. 534Edn., dated the 16th February 1923.

**Minister in charge: The Hon'ble Mr. P. C. Mitter, C.I.E.**

**Calcutta.**

*No. 2011Edn.—The 12th July 1923.*—Rai Jyoti Bhusan Bhaduri Bahadur, Professor Presidency College, in the Indian Educational Service, is allowed leave with effect from the 23rd April to the 22nd December 1923, both days inclusive, viz., the summer vacation of the College from the 23rd April to the 1st July 1923, under rule 82 (*d*) of the Fundamental Rules, and leave on average pay for the remaining period under rule 81 (*b*) (*i*) of those rules.

**Appointment by the Chancellor.**

**Calcutta.**

*No. 2027Edn.—The 13th July 1923.*—In exercise of the power conferred by section 6, sub-section (*1*), clause (*c*) of the Indian Universities Act, 1904 (VIII of 1904), as amended by the Calcutta University Act, VII of 1921, His Excellency the Chancellor of the Calcutta University is pleased to nominate the Hon'ble Sir Bijay Chand Mahtab, K.C.S.I., K.C.I.E., I.O.M., Maharajadhiraja Bahadur of Burdwan, and Mr. Surendra Nath Mallick, M.A., B.L., M.L.C., to be Ordinary Fellows of the Calcutta University, with effect from the 4th July 1923.

**Minister in charge: The Hon'ble Mr. P. C. Mitter, C.I.E.**

**Bakarganj. Tippera.**

*No. 2041Edn.—The 14th July 1923.*—Babu Jyotish Chandra Mukharji, Head Master, Jhalakati High School, is appointed to act as Head Master, Comilla Zilla School, with effect from the date on which he joins the appointment, *vice* Khan Sahib Maulvi Wahidun Nabi, under suspension, or until further orders.

**Minister in charge: The Hon'ble Mr. P. C. Mitter, C.I.E.**

*No. 2042Edn.—The 14th July 1923.*—Babu Lalit Kumar Chakrabarti, Assistant Head Master, Khulna Zilla School, is appointed to act in the Bengal Educational Service as Head Master, Jhalakati High School, with effect from the date on which he joins the appointment, *vice* Babu Jyotish Chandra Mukharji, on deputation, or until further orders.

**Khulna.**
**Bakarganj.**

J. N. ROY,
*Secretary to the Government of Bengal.*

## MISCELLANEOUS.

**Minister in charge: The Hon'ble Mr. P. C. Mitter, C.I.E.**

*No. 1267Mis.—The 10th July 1923.*—Notification No 1303Mis., dated the 22nd November 1920, published in the *Calcutta Gazette* of the 24th November 1920, which declared certain ancient monuments in the district of Calcutta to be protected monuments, is confirmed under section 3 (*3*) of the Ancient Monuments Preservation Act, 1904 (VII of 1904), so far as it relates to Holwell's Monument in Dalhousie Square, Calcutta.

**Calcutta.**

**Minister in charge: The Hon'ble Mr. P. C. Mitter, C.I.E.**

*No. 1283Mis.—The 11th July 1923.*—Babu Rajani Ranjan Chaudhuri, Sub Registrar, in charge of the Sadar Registration office at Suri, in the district of Birbhum, is appointed to be Sub-Registrar in charge of the Sadar Registration office at Bankura.

**Birbhum.**
**Bankura.**

**Minister in charge: The Hon'ble Mr. P. C. Mitter, C.I.E.**

*No. 1285Mis.—The 11th July 1923.*—Babu Jogesh Chandra Ghosh, Sub-Registrar of Asansol, in the district of Burdwan, is appointed temporarily to act as a Sub-Registrar in charge of the Sadar Registration office at Suri in the district of Birbhum.

**Burdwan.**
**Birbhum.**

**Minister in charge: The Hon'ble Mr P. C. Mitter, C.I.E.**

*No. 1287Mis.—The 11th July 1923.*—Maulvi Saiyid Moshfiqus Saleheen, Inspector of Muhammadan Marriage Registration offices, is appointed temporarily to act as Sub-Registrar in charge of the Sadar Registration office at Krishnagar, in the district of Nadia, during the absence, on leave, of Babu Surendra Gopal Mitra, or until further orders.

**Nadia.**

**Minister in charge: The Hon'ble Mr. P. C. Mitter, C.I.E.**

*No. 1293Mis.—The 13th July 1923.*—It is notified for general information that the Government of Bengal (Ministry of Education) are pleased to sanction the further retention for one year, with effect from the 1st July 1923, of the office of the Joint Sub-Registrar of Kendua at Madan, in the district of Mymensingh.

**Mymensingh.**

**Minister in charge: The Hon'ble Mr. P. C. Mitter, C.I.E.**

*No. 1301Mis.—The 11th July 1923.*—Rai Gyanendra Nath Roy Bahadur, Personal Assistant to the Inspector-General of Registration, Bengal, is appointed temporarily to act, in addition to his own duties, as Inspector-General of Registration, Bengal, Registrar of Parsi marriages beyond the local limits of the ordinary civil jurisdiction of the High Court under section 7 of Act XV of 1865, and as Registrar-General of Births, Deaths and Marriages under Act VI of 1886, during the absence of the Hon'ble Khan Bahadur Aminul Islam.

J. N. ROY,
*Secretary to the Government of Bengal.*

## Orders by the Director of Public Instruction, Bengal.

### SUBORDINATE EDUCATIONAL SERVICE.

*The 7th July 1923.*

*No. 391A.*—Maulvi Muhammad Hossain, head maulvi, Nawab Bahadur's Institution, Murshidabad, in the scale of Rs. 60—4—160, was allowed, under article 271 of the Civil Service Regulations, privilege leave for three days with effect from 2nd January 1923.

**Murshidabad.**

*No. 392A.*—Maulvi Makhluquor Rahman, Subdivisional Inspector of Schools, Cox's Bazar, Chittagong, on Rs. 150—10—250, is granted, in terms of rule 81 (*b*) (*ii*) of the Fundamental Rules, leave on average pay on medical certificate for twenty-two days in extension of that granted to him in this office notification No. 332A., dated the 4th June 1923

**Chittagong.**

2. The officiating arrangements already sanctioned for the performance of the absentee's duties are also allowed to continue.

*No. 393A.*—Maulvi Muhammad Qasim, assistant maulvi, Senior section of the Arabic Department, Calcutta Madrasah, on Rs 100—10—250, is granted, in terms of rule 81 (*b*) (*ii*) of the Fundamental Rules, leave on medical certificate on average pay for twenty one days, with effect from the 25th June 1923

**Calcutta.**

*The 9th July 1923.*

*No 394A.*—Babu Pravash Chandra De, Sub-Inspector of Schools, Jhargram, Midnapore, on Rs 75—5—200, is granted, in terms of rule 81 (*b*) (*ii*) of the Fundamental Rules, leave on average pay for fifteen days with effect from 2nd July 1923 or any subsequent date on which he may have availed himself of it.

**Midnapore.**

*The 10th July 1923*

*No. 395 A.*—Babu Nitendra Nath Roy is declared to have acted as assistant master, Bankura Zilla School, on an allowance of Rs 75 per mensem, for the periods from the 4th to the 12th May 1923 and from the 18th June to the 2nd July 1923 against the vacancy in the scale of Rs 150—10—250, consequent on the grant of leave to Babu Sashi Bhushan Chatterjee (assistant head master of the school)

**Bankura.**

*The 11th July 1923*

*No. 396A*—Babu Amarendra Nath Ghosal, assistant master, Habiganj Government High School, Assam, on Rs 50—5—150, and now officiating assistant master, Nawab Bahadur's Institution, Murshidabad, on Rs. 75—5—200, is appointed to act as assistant master, Bankura Zilla School, and in the scale of Rs. 75—5—200, with effect from the 5th July 1923 or any subsequent date on which he joins the appointment, *vice* Babu Srikanta Routh, deceased

**Habiganj. Murshidabad.**

*No. 397A.*—Babu Dakshina Ranjan Bhattacharjee is declared to have acted as Grammar pandit, Sanskrit Collegiate School, on an allowance of Rs. 60 per mensem, for the period from the 13th February to the 30th April 1923 (both days inclusive), *vice* Babu Deb Kumar Dutta, on deputation.

This modifies this office notification No 322A(5), dated the 29th May 1923

**Calcutta.**

*The 13th July 1923.*

*No. 398A.*—Babu Tulsi Das Bose is appointed to act as assistant master, Barrackpur Government High School, on an allowance of Rs. 75 per month in the scale of Rs. 75—5—200 with effect from the date he joins the appointment, *vice* Babu Monomohan Roy Chaudhuri, on deputation to the David Hare Training College.

**24-Parganas.**

*No. 399A.*—Mr. E. V. Saldanha (on Rs. 400—25—700) is declared to have been confirmed in his appointment as assistant master, Victoria Boys' School, Kurseong, and in class II, Subordinate Educational Service, with effect from the 17th March 1919.

**Darjeeling.**

W. W. HORNELL,
*Director of Public Instruction, Bengal.*

---

## Orders by the Inspector-General of Registration, Bengal.

---

*No. 279.—The 7th July 1923.*—Babu Bhupati Ranjan Sen, Sub-Registrar, is allowed leave on average pay for one month (the entire period being on account of privilege leave at credit), under rule 81 (*b*) (*ii*) of the Fundamental Rules, on being relieved of his officiating appointment as Sub-Registrar of Anwara, in the district of Chittagong, with effect from the 28th May 1923.

**Chittagong.**

*No. 280.—The 10th July 1923.*—Babu Abinash Chandra Ganguli, Sub-Registrar, on leave, is appointed to be Sub-Registrar of Gaurnadi, in the district of Bakarganj.

Bakarganj. Faridpur.

This cancels this Department notification No. 203, dated the 29th May 1923, appointing him to be Sub-Registrar of Damadya, in the district of Faridpur.

*No. 281.—The 10th July 1923.*—Babu Asita Ranjan Chaudhuri, Sub-Registrar of Gaurnadi, in the district of Bakarganj, is appointed to be Sub-Registrar of Matberia, in the same district.

Bakarganj.

A. ISLAM,
*Inspector-General of Registration, Bengal.*

## FINANCE DEPARTMENT.

### NOTIFICATION.

*No. 1522Mis.—The 14th July 1923.*—The Governor in Council is pleased to make the following revised rules for the regulation of appointments in the clerical service of the Secretariat of the Government of Bengal and certain Government offices in future in supersession of all previous rules issued on the subject.

A. MARR,
*Secretary to the Government of Bengal.*

### Rules for the regulation of appointments in the clerical service of the Secretariat of the Government of Bengal.

The clerical service of the Secretariat of the Government of Bengal is divided into two divisions—the Upper Division and the Lower Division.

#### UPPER DIVISION.

2. The Upper Division of the clerical service in the Secretariat is graded as follows:—

(*a*) Rupees 125 a month on probation for two years.

(*b*) After confirmation a time scale of pay, Rs. 150—10—250—15—400, with an efficiency bar at the stage of Rs. 250

(*c*) Two selection grades, one of Rs. 325—25—400 alongside the above time scale, and another of Rs. 425—25—500 beyond it. The former selection grade is limited to 15 per cent. of the number in the Upper Division

Special pay of Rs. 100 per mensem attaches to certain of the posts of Head Assistants.

3. Vacancies which occur in the Upper Division of each department will be filled by the following methods:—

(*a*) Direct recruitment of candidates by means of a competitive examination, which will be the same as that prescribed for the recruitment of the Bengal Civil Service (Executive) and other services in Bengal. The rules regulating the recruitment of these services will apply in the case of direct recruitment of the Upper Division of the Secretariat. These rules may be obtained on application from the Appointment Department of this Government.

(*b*) Selection of suitable Europeans or Eurasians. The educational attainments required of such candidates will be the Intermediate Examination, the Senior Cambridge Local Examination, the Cambridge Senior School Certificate Examination or a certificate that the candidate has passed the final examination of the advanced Commercial Classes. In this case preference will be given to graduates.

(*c*) Promotion from the Lower Division.

No clerk in the Lower Division, however, has, as a matter of right, any claim to promotion in the Upper Division, which will be given strictly according to merit.

One-third of the vacancies in the Upper Division will be filled up by method (*c*) after all the assistants who were recruited previous to April 1910 and are considered fit for promotion to the Upper Division have been provided for in that division. This rule will not, however, affect the appointment of Muhammadans under rule 14 or the appointment of Anglo-Indians to the special branch of the Political Department of this Government.

4. For the purpose of the selection of candidates under rule 3 (*b*), the Director of Public Instruction shall be asked to submit, in consultation with the authorities of European colleges and schools, the names of two or three candidates for each vacancy who possess the qualifications prescribed. From among these a selection will be made by the Secretaries at a meeting.

5. Candidates selected under rules 3 (*a*) and 3 (*b*) will be on probation for two years, during which they will draw pay at the rate of Rs. 125 per month Candidates selected under rule 3 (*c*) will on confirmation commence at Rs. 170 in the time scale of Rs. 150—10—250—15—400 for the Upper Division.

LOWER DIVISION.

6. The Lower Division of the clerical service of the Secretariat is graded as follows :—

(*a*) Rs. 60 a month on probation for two years.
(*b*) After confirmation a time scale of pay Rs. 65—4—145—145—150, with an efficiency bar at the stage of Rs. 105.
(*c*) Selection grade of Rs 175—25—200 for clerks of special merit (limited to 10 per cent. of the Lower Division in each Department) who have passed at least three years on the maximum of the time scale.

The bar in the time scale will apply in the case of those clerks who are employed on purely routine work, such as despatcher, sorter, recorder, indexer, diarist, inter-departmental clerk, file-keeper, etc.

7. The vacancies which occur in the Lower Division of the departments of the Secretariat will be filled up by means of a competitive examination In special cases, as laid down in rules 13 and 14, appointments may be made by nomination

8. The examination will be held in the month of August of each year The arrangement for the examination will be made by the Central Examination Committee, Bengal, who will be assisted by paid examiners, and will act in communication with the Secretary to the Government of Bengal, Finance Department

9. Candidates will be required to produce evidence that they have been through a complete secondary school course. In the case of Europeans and Anglo-Indians, applicants may be accepted who have obtained the elementary school certificate and have taken the supplementary commercial course prescribed by the European School Code. Every candidate must submit before the 15th July a written application for permission to appear at the examination.

10 The application under the last rule shall be in the form given in the margin, and must be accompanied by a treasury receipt for the sum of Rs 10. This sum the candidate is required to pay into the treasury nearest his place of residence by way of examination fee and in no circumstances will this sum be refunded.

FORM

To
The Secretary to the Government of Bengal,
Finance Department

Sir,

I request permission to present myself at the ensuing examination of the candidates for appointment in the Lower Division of the clerical service of the Secretariat of the Government of Bengal

2 A treasury receipt for the fee of Rs 10 is forwarded herewith

I am, etc

With the application must also be forwarded—

(*i*) The candidate's evidence that he has been through a complete secondary school course, and in the case of Europeans and Anglo-Indians, that he has obtained the elementary school certificate and taken the supplementary commercial course prescribed by the European Schools Code.

(*ii*) Evidence that the candidate, at the date of making the application, is not less than 18 and not more than 23 years of age. The date of the candidate's birth must be stated.

(*iii*) In case the candidate has been educated at a school in which students' good conduct registers are kept, and in case a year has not elapsed since he left school, an extract from the register relating to the candidate for the last year of his attendance at school, certified by the head master In other cases a certificate that the candidate is of good moral character is required from the head of the institution in which he has last been educated, or from some respectable householder to whom he is well known in private life, and who is himself known to a District or Subdivisional Magistrate, or to the head of some Government office, this last fact being certified by the counter-signature of the officer in question

(*iv*) If the candidate is employed under Government, a certificate by the head of the office or department to the effect that in his opinion there is no objection to the candidate appearing at the ensuing clerkship examination.

(*v*) A statement whether the candidate has appeared at any previous clerkship examination, and, if so, in what year.

11. The syllabus of the examination for admission to the Lower Division of the Secretariat is as follows :—

| | | |
|---|---|---|
| (I) The preparation of a précis and an index of a series of official letters taken from a file (one paper of three hours) ... | | 100 marks |
| (II) (*a*) The correction of a page of English containing mistakes of vocabulary, idiom and grammar and misspellings ... | one paper of three hours ... | 100 ,, |
| (*b*) The preparation of a draft letter from a typical office note ... | | |

(III) A paper on general knowledge (one paper of three hours) ... 100 marks.

(IV) Algebra and Geometry, the same standard as that for the Matriculation Examination of the University (one paper of three hours) ... ... ... ... ... 100 „

(V) Arithmetic including particularly Percentage, Compound Interest, Discount, also the use of logarithms, algebraic symbols and graphs (one paper of three hours) ... 100 „

A series of long sums in Addition, Substraction, Multiplication and Division to be done within a limited time will also be set

No candidate will be credited with marks in any subject in which he fails to get one-fourth of the full marks.

12. As soon as practicable after the examination, the Central Examination Committee, Bengal, will report the result to the Secretary to the Government of Bengal, Finance Department. The report will contain the names of all the candidates in order of merit, and subject to their being adjudged fit on the results of the examination, the exact dates of their births and the number of marks obtained by each candidate in each subject. The candidates will then be offered, in order of merit, their choice of the various vacancies, and they will be appointed accordingly, subject to any arrangement which the Finance Department may find necessary in consultation with the department concerned, with special reference to rule 14 Any vacancy occurring after the examination and before the first day of the following April will be offered through the Finance Department to the remaining candidates in the list in the same way. Vacancies occurring after the 1st April in any year will be reserved for competition at the examination in the ensuing August.

GENERAL

13. The head of an office will retain the power of appointing men of special ability or aptitude to any post in the office when such a post cannot be filled in the ordinary way

14. (*1*) The head of an office will also reserve the power of appointing suitable Muhammadans to either the upper division or the lower division. In the case of the upper division of the Secretariat every third appointment in each office made under rule 3 shall ordinarily be given to a Muhammadan, provided he possesses the educational qualifications required by rule 3 (*a*) In the lower division of the departments of the Secretariat and attached offices every third appointment in each office shall ordinarily be given to a Muhammadan who possesses the educational qualifications required by rule 9 and furnishes the evidence required by rule 10. The assistance of recognised Muhammadan Associations and that of the Assistant Director of Public Instruction for Muhammadan Education should be utilised in securing qualified candidates for appointments in either division. In the lower division such selection shall be made only when there is no suitable Muhammadan candidate in the competitive examination to whom the post can be offered.

(*2*) Until the proportion of Muhammadans in the various offices reaches one-third, the claims of qualified Muhammadan candidates shall be considered in filling up all vacancies

15. If at any time during the period of probation, or at its close the probationer's work is not considered satisfactory by the head of the office in which he is employed, he may be discharged and will have no claim to either gratuity or compensation. If, however, he was admitted from another office he may be reverted to his former appointment or if this is not practicable, tranferred to another appointment on the same pay.

16 Every probationer, before appointment, will be required to produce a statement showing to whom he is related or connected in the office in which he desires to serve. He must state the precise relationship or connection and certify that his statement, so far as he knows, is correct and complete If any wilful inaccuracy is subsequently detected in this declaration, the person making it will be liable to be discharged from Government service

17. Promotion of clerks in the upper division is regulated by seniority and merit combined, but in the higher grades more importance will be attached to merit.

18. Every appointment is made subject to the production of a medical certificate from the Presidency Surgeon, who is entrusted with the duty of examining candidates for appointment in the particular office to which the probationer has been appointed.

19. Rules 7 to 12 and rule 14 will apply *mutatis mutandis* to the following offices:—

Board of Revenue, Bengal; Inspector-General of Prisons; Inspector-General of Police; Director of Public Instruction; Director of Land Records; Director of Agriculture; Inspector-General of Registration; Surgeon-General with the Government of Bengal; Superintendent of Emigration and Protector of Emigrants; Collector of Customs, Calcutta; Commissioner of Excise and Salt, and Director of Public Health, Bengal.

20. Copies of these rules may be obtained on application at the office of the Secretary to the Government of Bengal Finance Department.

## COMMERCE DEPARTMENT.

### NOTIFICATION.

*No. 3305Com.—The 11th July 1923.*—Whereas the period of three years laid down by clause IV of the Schedule to the Indian Electricity Act, 1910 (IX of 1910), read with sub-clause (*1*) of clause 5 of the Hooghly-Chinsurah Electric License, 1919, granted at Calcutta, under Bengal Government notification No. 1M.P.I., dated the 2nd December 1919, to Messrs. Nursing Sahay Madun Gopal and subsequently transferred to the East India Electric Supply and Traction Company, Limited, for the performance by the licensees of the obligations imposed on them by the aforementioned clause of the said license, expired on the 1st December 1922, and whereas the licensees have failed to perform the said obligations within that time and have applied to the Government for an extension of the period :

Now, therefore, the Governor in Council is pleased, in exercise of the powers conferred by sub-section (*2*) of section 4 of the said Act, to direct that the license shall remain in force, subject to the performance by the licensees of the said obligations within a further period of eighteen months computed from the 1st December 1922

A. MARR,
*Secretary to the Government of Bengal.*

## MARINE DEPARTMENT.

### NOTIFICATIONS

*No.74Marine.—The 9th July 1923.*—Mr. E. C. Rowllings, Second Mate Leadsman, is granted leave on average pay from the 21st May 1923 to the 15th July 1923, under article 81(*b*) (*i*) of the Fundamental Rules.

*No. 75Marine —The 9th July 1923.*—Mr. E. A. Ward, Branch Pilot, is granted leave for twelve months, viz., on average pay for five months and one day and on half average pay for the remaining period, under articles 81(*b*)(*i*) and 81(*d*) of the Fundamental Rules, with effect from the 14th June 1923 P. M.

*No. 76Marine.—The 10th July 1923.*—Mr. R. F. Maclean, Provisional 1st Mate Leadsman, is granted leave on average pay for six days (entirely on account of privilege leave at his credit), under article 81 (*b*) (*i*) of the Fundamental Rules, in extension of the leave granted in Bengal Government notification No 67Marine, dated the 18th June 1923.

*No. 77Marine —The 10th July 1923.*—Mr. J H Lindquist, Branch Pilot, is granted leave on average pay for three months, under article 81 (*b*) (*i*) of the Fundamental Rules, in extension of the leave granted in Bengal Government notification No. 45Marine, dated the 30th April 1923.

*No. 78 Marine.—The 10th July 1923.*—In exercise of the powers conferred by section 5 of the Indian Explosives Act, 1884 (IV of 1884), and with the previous sanction of the Governor-General in Council, the Governor in Council is pleased to make the following rules to regulate the transport and importation of explosives in the Port of Calcutta, in supersession of the rules published under Bengal Government notification No. 69 Marine, dated the 1st July 1918.

A. MARR,
*Secretary to the Government of Bengal.*

### RULES TO REGULATE THE TRANSPORT AND IMPORTATION OF EXPLOSIVES IN THE PORT OF CALCUTTA.

NOTE—Unless there is anything repugnant in the subject or context—

" Explosives ", as defined in section 4 of the Indian Explosives Act, 1884, and as used in these rules—

(*a*) means gunpowder, nitroglycerine, dynamite, guncotton, blasting powders, fulminate of mercury or of other metals, coloured fires, and every other substance, whether similar to those above-mentioned or not, used or manufactured with a view to produce a practical effect by explosion or a pyrotechnic effect ;

(*b*) includes fog-signals, fireworks, fuzes, rockets, percussion caps, detonators, cartridges, ammunition of all descriptions and every adaptation or preparation of an explosive as above defined ; and

(*c*) includes any dangerous substance which may have been ordered by the Governor-General in Council, under section 17 of the said Act, to be deemed an explosive.

1. Except as is hereinafter provided no vessel shall have on board, within the limits of the port, any explosives except two storm or danger signals, six smaller lights of the same description, 24 blue lights, 24 rockets, or 24 socket signals with friction tubes, 24 detonating signals with friction tubes, or, in lieu thereof, 24 one-pound charges of

gunpowder for use in a gun together with a small box of friction tubes and a flask of priming powder, 24 private signals of any Company, and 12 red lights for each boat and life raft carried under the statutory rules for life-saving appliances (made by the Board of Trade under section 427 of the Merchant Shipping Act, 1894), and a reasonable quantity of safety cartridges for the equipment of the vessel or for the personal use of the officers on board the ship, provided that the quantities held by them are declared in the prescribed Customs Forms A and B, respectively, or in the case of a foreign vessel, in the Stores List of such vessel. Detonators and their friction tubes shall be stored separately. All explosives which vessels are by this rule permitted to keep on board in port shall be stored in all cases in separate, detached and completely enclosed magazines for each description of signals. The magazines should be kept in a house on deck and stowed or ranged as far apart as possible, so that in the event of fire they can be removed or thrown over-board.

2. All inward-bound vessels carrying explosives, in excess of the quantity prescribed by rule 1, are prohibited from proceeding above Budge-Budge

3. Before entering the limits of the port, the Master of every vessel having explosives on board shall make and sign a declaration in writing that to his knowledge and belief there is not on board any explosive in excess of the quantity prescribed by rule 1.

4. Masters of vessels having on board explosives belonging to the following classes, as laid down in the Indian Explosives Rules, 1914, shall make their own arrangements for the discharge of the explosives :—

Class 1—Gunpowder.
" 2—Nitrate mixture.
" 3—Nitro-compounds.
" 6—Ammunition (detonators only).

5. All boats or barges containing explosives shall carry a red flag not less than 3 feet by 2 feet in size.

6. No smoking and no fire or light of any description except the red lamp between sunset and sunrise, shall be permitted on board of any boat which has explosives on board

7. Explosives of all classes should, if possible, be discharged into wooden boats, barges or lighters. Iron or steel boats, barges or lighters may be used provided a wooden floor is laid and the sides are effectually covered with leather, wood, cloth or similar suitable material, so as to prevent the packages containing explosives coming in contact with naked metal.

8. No cargo boat shall be employed for the conveyance of explosives between Moyapur, Diamond Harbour and Uluberia, unless covered by a special license issued by the Port Commissioners. Such license will only be issued to cargo boats classified as class 1 in the Port Commissioners' schedule, which are provided with the safeguards mentioned in rule 7. The licenses must certify that the conditions stated above have been met and will require to be renewed at intervals of not more than four calendar months.

9. All boats, barges and lighters carrying explosives shall carry a buoy on deck with 15 fathoms of 3" rope, one end being attached to the buoy and one end to the boat, barge or lighter. The rope shall be attached to such part of the boat, barge or lighter as is most clear of spars, gear or other obstruction, the position to be approved by the licensing authority.

10. The buoy shall be a drum painted in red, 1'-9" in length and 1'-2" in diameter, properly strapped with an iron band in the middle having a ring attached for securing the rope and shall be approximately of the shape of the diagram set forth below, viz:—

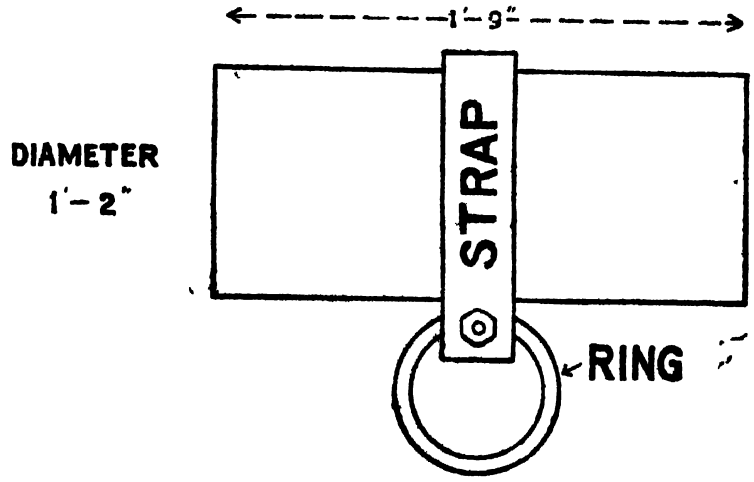


[*Note.—The size of this buoy has been so chosen as to permit of an ordinary 10 gallon oil drum being utilised for the purpose if fitted.*]

**Explosives that may be landed at Moyapore.**

11. Explosives of classes 1, 6 and 7, that is to say, gunpowder, ammunition and fireworks as specified in the rules issued under the Government of India, Commerce and Industry Department, notification No. 4013-33, dated the 6th June 1914 (hereinafter referred to as the Indian Explosives Rules, 1914), if the quantity thereof is in excess of that prescribed in rule 1, shall be landed and deposited in the magazine at Moyapore.

12. Explosives of classes 2 and 3, division 2 (as specified in the Indian Explosives Rules, 1914) such as small-arms nitro-compounds may be landed and deposited in the magazine at Moyapore provided that such explosives are by their nature and composition suitable for use only in the loading of safety sporting cartridges and are not intended for or suitable for blasting purposes.

13. Explosives of classes 1 to 7 specified in the Indian Explosives Rules intended for despatch up-country may be discharged into boats only at Moyapur or Diamond Harbour and transported thence under Police guard to Uluberia or Diamond Harbour railway stations and there loaded into railway wagons for discharge to a magazine declared suitable by the Government of Bengal under rule 24 of the Indian Explosives Rules, 1914, subject to the following restrictions, viz. :—

I. The transport should be covered by a pass to be granted by the District Magistrate, 24-Parganas.

II. The loading into and unloading out of boats should be done during daylight

III. No boat with explosives shall be moored at Uluberia station inside the railway boundary.

IV Explosives shall be removed direct from boats to wagons.

14 For the convenience of vessels having ship's gunpowder, ammunition and fireworks on board, a properly constructed powder-boat shall always be in attendance off the magazine for landing and shipping such explosives. No charge will be made for the use of the boat for landing these ship's explosives, but the responsibility of the magazine-keeper in respect of the ship's explosives shall not commence until they are landed on the bank, and shall cease as soon as they are shipped on board the boat. Every precaution shall be taken to insure the safety of the explosives while in the boat, but the landing and shipping shall be at the risk of the vessel.

15 Vessels bringing consignments of trade explosives shall be allowed the use of the magazine powder-boat; but, should passing vessels require the use of the boat to put out or take in ship's explosives, such vessels shall be accommodated before the boat is used to discharge explosives brought as cargo. The landing of trade explosives, whether the station boats or private boats are employed, shall be at the risk and expense of the consignees of the explosives, and no liability shall be accepted for damage sustained while in course of landing or until the consignments are stored in the magazine.

16. Masters of vessels requiring the use of the magazine powder-boats shall hoist a flag at the fore-topmast head on coming in sight of the magazine, as a signal to the keeper to have the boat and coolies in attendance.

17. Masters of vessels shall mark the names of their respective vessels on the barrels and packages of ship's explosives previously to their being landed; if not marked, they shall not be received by the magazine powder-boat.

18. The magazine-keeper shall give to the Master of any vessel landing explosives at the magazine a receipt for the number of packages, and the magazine-keeper shall be accountable to such Master for the re-delivery of such packages.

19. A clerk shall always be in attendance in the magazine powder-boat, and shall receive from the Master the declaration specified in rule 3.

20. If any vessel shall be prevented, by stress of weather or by being in distress, from landing or depositing any explosives which are in excess of the quantity prescribed by rule 1, such vessel may be permitted to come up to the lower limits of the port, but shall not proceed above Matteabrooj Ghat, and the Master of such vessel shall forthwith give notice to the Harbour Master of his having such explosives on board, and shall obey the Harbour Master's directions relating to the same.

21. Masters of outward-bound vessels, who may require ship's explosives for their outward voyage, shall not take such explosives on board in any part of the river above Budge-Budge, with the exception of a quantity not exceeding that prescribed in rule 1.

22. Masters of vessels, who have deposited ship's explosives at the magazine, shall inform the Harbour Master of the date on which the vessel will pass the magazine outward-bound, and, on receipt of this information, orders shall be forwarded to the magazine-keeper to place the said explosives in the magazine powder-boat, and to send it off at such time as will avoid any detention of the outward-bound vessel. Before taking the explosives on board, the receipt granted by the magazine-keeper shall be given up.

**Explosive that may be landed at Prinsep's Ghat.**

23. Such boats as are approved for this purpose by the Boat Surveyor to the Port Commissioners shall be permitted to take on board at the Moyapore Magazine and bring as far as Prinsep's Ghat, under cover of licenses to be granted by the Commissioner of Police in such form as may be prescribed by the Local Government, 500 lbs. of trade gunpowder which is the property of dealers and consignees. For each boat the dealers shall supply an armed guard (pensioned sepoy), whom the Commissioner of Police, Calcutta, will select.

24. Delivery of trade gunpowder into boats at the Moyapore Magazine for conveyance to Calcutta shall only be made upon orders issued by the Port Commissioners.

25. No boat conveying gunpowder in accordance with the provisions of rules 23 and 24 shall be allowed to proceed above Prinsep's Ghat. No powder shall be landed at any ghat, other than at Prinsep's Ghat, except with the special permission of the Port Commissioners.

26. The provisions of rules 23, 24 and 25 shall apply to Chinese crackers, provided that dealers in Chinese crackers shall not be required to employ an armed guard or to maintain a boat exclusively for the purpose of carrying Chinese crackers. The boats that are used for this purpose must be approved by the Boat Surveyor to the Port Commissioners.

**Explosives that may be landed at the docks or jetties.**

27. Explosives specified in the first division, class 6, of the Indian Explosives Rules, 1914, viz., safety cartridges, safety fuzes for blasting, railway fog-signals, and percussion caps which have been brought as part of a general cargo, and placed on board the vessels while lying in dock at ports of shipment, may be brought into port and landed at the docks or jetties in accordance with the regulations prescribed in that behalf in the Port Commissioners' by-laws.

The term "safety fuze" means a fuze for blasting which burns and does not explode, and which does not contain its own means of ignition, and which is of such strength and construction and contains an explosive in such quantity that the burning of such fuze will not communicate laterally with other like fuzes.

The expression "safety cartridges" means cartridges for small-arms of which the case can be extracted from the small-arm after firing, and which are so closed as to prevent any explosion in one cartridge being communicated to other cartridges. The term also includes rifle-calibre machine-gun cartridges if they are of the above description, whether they are for use with machine-guns having chambers identical with those of rifles, or with machine-guns which have special chambers.

The maximum diameter at which a small-arm or machine-gun cartridge can be accepted as "safety" is one inch.

28. Explosives shall not be landed within the port or at Moyapore or Diamond Harbour at any time when it is necessary to use artificial lights, and no explosives shall be landed, received into, or delivered from the magazine when it is necessary to use artificial lights.

29. Whoever contravenes any of the provisions of rule 2, 3, 4, 5, 6, 7, 8, 9, 10, 20, 21, 23, 25 or 28 shall be punished with fine which may extend to the amount mentioned in the proviso to section 5 (3) of the Indian Explosives Act, 1884 (IV of 1884).

**(License granted under Marine Department notification No. 78 Marine, dated the 10th July 1923, governing the transport of explosives in the Port of Calcutta.)**

(*Vide* rule 23 of the rules)

**Free.**

License is hereby granted to Messrs. .....

.....

to convey by river 50 lbs. of gunpowder from Moyapore Magazine to Prinsep's Ghat, subject to the rules framed thereunder and to the conditions specified on the reverse.

*Commissioner of Police, Calcutta.*

CALCUTTA, *the* *19* .

(Reverse.)

**Conditions.**

1. The gunpowder shall be packed in accordance with schedule IV of the Indian Explosives Rules, 1914.
2. If not made use of within 15 days from its date of issue, the license shall become void.

A. MARR,
*Secretary to the Government of Bengal.*

## PUBLIC WORKS DEPARTMENT.

### ESTABLISHMENT.

NOTIFICATION.

**Minister in charge: The Hon'ble Nawab Saiyid Nawab Ali Chaudhuri, Khan Bahadur, C.I.E.**

*No. 36.—The 11th July 1923.*—In continuation of this department notification No. 14, dated the 29th March 1923, the services of Mr. A. R. Lamb, Assistant Accounts Officer, office of the Accountant-General, Bengal, on special duty in this department, are replaced at the disposal of the Accountant-General, Bengal, with effect from the 10th July 1923.

G. G. DEY,
*Secretary to the Government of Bengal (offg.).*

## IRRIGATION DEPARTMENT.

NOTIFICATION.

*No. 53.—The 12th July 1923.*—The following extract from a notification issued by the Government of India in the Department of Industries and Labour, Public Works Branch, is republished for information.

G. T. HUNTINGFORD,
*Secretary to the Government of Bengal (offg.).*

No. 23, dated the 5th July 1923.

The following gentlemen whose appointment as Assistant Executive Engineers was announced in Government of India, Public Works Department, notification No. 12, dated the 22nd March 1921, are confirmed in their appointments:—

* * * * * *

Mr. H. Orr ... ... ... Bengal Irrigation

* * * * * *

A. H. LEY,
*Secretary to the Government of India.*

**ESTABLISHMENT.**

**[Fifth publication.]**

*No. 21.—The 19th June 1923.*—The following draft of amendments, which, in exercise of the powers conferred by sections 6 and 11 of the Canals Act, 1864 (Bengal Act V of 1864), the Governor in Council intends to make in the rules and schedules of rates of tolls (published in Bengal Government notification No. 5, dated the 19th June 1917, in Part I of the *Calcutta Gazette* of the 20th *idem*) for the Midnapore Canal with branch to Naraingar, is hereby published for the information of persons likely to be affected thereby.

II. The draft will be taken into consideration on or after the 5th August 1923, and any objections or suggestions received by the undersigned before that date will be duly considered :—

*Draft amendments.*

1. For clause (*c*) of rule 2 of the said rules, *substitute* the following, namely :—

"The maundage on which the amount of toll is calculated shall be reckoned to the nearest integral multiple of 12½ maunds, any remainder of less than 12½ maunds being rejected. In the case of boats exceeding 500 maunds by measurement, the maundage shall be reckoned to the nearest integral multiple of 50 maunds rejecting any remainder of less than 50 maunds."

2. In rule 7 of the said rules for the words "one rupee" *substitute* the words "two rupees per ticket."

3. In rule 8 of the said rules—

(*i*) for the words and figures "eight annas per 100 maunds" *substitute* the words and figures "one rupee per 100 maunds."

(*ii*) for the words "one anna per timber per day" *substitute* the words "two annas per timber per day."

(*iii*) for the words and figures "two annas per 100 per day" *substitute* the words and figures "four annas per 100 per day."

(*iv*) for the words and figures "eight annas per 100 per day" *substitute* the words and figures "one rupee per 100 per day."

4. In rule 12 of the said rules for the words and figures "four annas per 100 maunds" *substitute* the words and figures "eight annas per 100 maunds."

5. For the schedules of rates of tolls to be charged on the Midnapore Canal and on the Naraingar Distributary, mentioned at the end of the said rules, *substitute* the following, namely :—

**Schedule of rates of tolls to be charged on the Midnapore Canal and the Naraingar Distributary.**

*Entering from both the East and West.*

| Description. | Range I, 7 miles, Uluberia to Bansberia | | Range II, 8 miles, Bansberia to Kantapukur. | | Range III, 11 miles, Dainan to Panskura. | | Range IV, 11 miles, Panskura to Balichak. | | Range V, 13 miles, Balichak to Mohanpur. | | Range V, 9 miles, Balichak to Kristnagar. | | | Range V, 4 miles, Kristnagar to Mohanpore. | | | Naraingar Distributary. Entering distributary from canal or *vice versa*. | |
|---|---|---|---|---|---|---|---|---|---|---|---|---|---|---|---|---|---|---|
| | Rs. | A | Rs. | A | Rs. | A. | Rs | A. | Rs. | A. | Rs. | A. | P. | Rs. | A. | P. | Rs. | A |
| Loaded vessels per hundred maunds. | 0 | 8 | 0 | 4 | 0 | 12 | 0 | 12 | 0 | 14 | 0 | 10 | 0 | 0 | 4 | 0 | 0 | 12 |
| Empty vessels per hundred maunds. | 0 | 4 | 0 | 2 | 0 | 6 | 0 | 6 | 0 | 7 | 0 | 5 | 0 | 0 | 2 | 0 | 0 | 6 |
| Timber in rafts or loose per timber. | 0 | 2 | 0 | 2 | 0 | 2 | 0 | 2 | 0 | 2 | 0 | 1 | 6 | 0 | 0 | 6 | 0 | 2 |
| Piles in rafts or loose per hundred piles. | 1 | 0 | 1 | 0 | 1 | 0 | 1 | 0 | 1 | 0 | 0 | 12 | 0 | 0 | 4 | 0 | 1 | 0 |
| Bamboos in floats per hundred | 0 | 4 | 0 | 4 | 0 | 4 | 0 | 4 | 0 | 4 | 0 | 3 | 0 | 0 | 1 | 0 | 0 | 4 |

NOTE.—Vessels which enter the canal at Kantapukur lock and do not proceed beyond 900 feet from that lock will be charged toll at the rate of two annas per 100 maunds, whether loaded or empty. Tolls will be realised at Uluberia, Bansberia, Kantapukur, Dainan, Panskura, Balichak and Kristnagar toll stations.

*No. 31.—The 19th June 1923.*—The following draft of amendments, which, in exercise of the powers conferred by sections 6 and 11 of the Canals Act, 1864 (Bengal Act V of 1864), the Governor in Council intends to make in the revised rules and revised schedules of rates of tolls (published in Bengal Government notification No 8, dated the 25th May 1915, in Part I of the *Calcutta Gazette* of the 26th *idem*) for the Hijili Tidal Canal and the portion of the Orissa Coast Canal lying in Bengal, is hereby published for the information of persons likely to be affected thereby.

II. The draft will be taken into consideration on or after the 5th August 1923, and any objections or suggestions received by the undersigned before that date will be considered :—

*Draft amendments.*

1. For clause (*c*) of rule 2 of the said rules, *substitute* the following, namely :—

"The maundage on which the amount of toll is calculated shall be reckoned to the nearest integral multiple of 12½ maunds, any remainder of less than 12½ maunds being rejected. In the case of boats exceeding 500 maunds by measurement, the maundage shall be reckoned to the nearest integral multiple of 50 maunds, rejecting any remainder of less than 50 maunds".

2. In rule 7 of the said rules for the words "one rupee" *substitute* the words "one rupee and eight annas per ticket".

3. In rule 8 of the said rules—

(*i*) for the words and figures "8 annas per 100 maunds" *substitute* the words and figures "12 annas per 100 maunds".

(*ii*) for the words "one anna per timber per day" *substitute* the words "one anna and six pies per timber per day."

(*iii*) for the words and figures "Two annas per 100 per day" *substitute* the words and figures "Three annas per 100 per day."

(*iv*) for the words and figures "Eight annas per 100 per day" *substitute* the words and figures "Twelve annas per 100 per day."

4. In rule 12 of the said rules for the words and figures "four annas per 100 maunds" *substitute* the words and figures "eight annas per 100 maunds".

5. For the three schedules of rates of tolls mentioned at the end of the said rules, *substitute* the following, namely :—

**Schedule of rates of tolls for local traffic to be charged on the Hijili Tidal Canal and the portion of the Orissa Coast Canal, Range III, lying within Bengal.**

| Description | Hijili Tidal Canal. | | Orissa Coast Canal | | | |
|---|---|---|---|---|---|---|
| | Gewankhali lock to Etamagra and *vice versa* | Tarapakia lock to Kalinagar lock and *vice versa*. | Bhaitagar lock to Mosagaon and *vice-versa* | Mosagaon to Contai and *vice versa* | Mosagaon to Pichaboni and *vice versa* | Pichaboni to Mirgoda and *vice versa*. |
| | Range I. | Range II. | | Range III. | | |
| | 11 miles. | 18 miles. | 9 miles. | 7 miles | 7 miles | 11 miles. |
| | Rs. A. | Rs A. | Rs. A. | Rs A | Rs A | Rs. A. |
| Vessels loaded per 100 maunds .. | 1 0 | 1 12 | 0 10 | 0 8 | 0 8 | 0 12 |
| Vessels empty per 100 maunds .. | 0 8 | 0 14 | 0 5 | 0 4 | 0 4 | 0 6 |
| Timber in rafts or loose per timber . | 0 2 | 0 2 | 0 2 | 0 2 | 0 2 | 0 2 |
| Bamboos in floats or loose per 100 bamboos. | 0 4 | 0 6 | 0 4 | 0 4 | 0 4 | 0 4 |

NOTE.—Tolls will be charged at Gewankhali, Etamagra, Tarapakia and Kalinagar on the Hijili Tidal Canal and at Bhaitgar, Mosagaon and Pichaboni toll stations on the Orissa Coast Canal.

**Schedule of rates of tolls for through traffic to be charged on the Hijili Tidal Canal and the portion of the Orissa Coast Canal, Range III, lying within Bengal.**

| From— | To— | Loaded vessels per 100 maunds | | | Empty vessels per 100 maunds. | | |
|---|---|---|---|---|---|---|---|
| | | Hijili Tidal Canal. | Orissa Coast Canal. | Total | Hijili Tidal Canal. | Orissa Coast Canal. | Total. |
| | | Rs. A. | Rs. A | Rs. A | Rs A. | Rs. A. | Rs. A. |
| Gewankhali ... | Kalinagar and *vice versa* ... | 2 8 | ... | 2 8 | 1 4 | ... | 1 4 |
| Ditto ... | Mosagaon and *vice versa* ... | 2 8 | 0 8 | 3 0 | 1 4 | 0 4 | 1 8 |
| Ditto ... | Pichaboni and *vice versa*... | 2 8 | 1 0 | 3 8 | 1 4 | 0 8 | 1 12 |
| Ditto ... | Mirgoda and *vice versa* ... | 2 8 | 1 10 | 4 2 | 1 4 | 1 2 | 2 6 |
| Ditto ... | Contai and *vice versa* ... | 2 8 | 1 0 | 3 8 | 1 4 | 0 8 | 1 12 |
| Ditto ... | Baliaghye or Karikapatna and *vice versa*. | 2 8 | 0 12 | 3 4 | 1 4 | 0 6 | 1 10 |

NOTE.—Tolls will be charged at Gewankhali, Etamagra, Terapakia and Kalinagar on the Hijili Tidal Canal and Bhaitgar, Surpai, Mosagaon and Pichaboni toll stations on the Orissa Coast Canal

**Schedule of rates of tolls for local traffic to be charged on the Pass khals and Baliaghye drain.**

| Description. | Terapakia Pass khal from Terapakia lock to Bansberia and *vice versa*. | Palaboni Pass khal from its junction with Terapakia khal at Anandapur to its junction with the Sadar khal and *vice versa* | Baliaghye drain from Surpai to Karikapatna and Baliaghye and *vice versa*. |
|---|---|---|---|
| | 10 miles. | 10 miles | 11 miles |
| | Rs A. | Rs. A. | Rs. A. |
| Loaded vessels per 100 maunds ... | 1 0 | 1 0 | 1 0 |
| Empty vessels per 100 maunds ... | 0 8 | 0 8 | 0 8 |
| Timbers in rafts or loose per timber ... | 0 2 | 0 2 | 0 2 |
| Bamboos in floats or loose per 100 bamboos. | 0 4 | 0 4 | 0 4 |

NOTE—Tolls will be charged at Terapakia and Surpai.

G. T. HUNTINGFORD,
*Secretary to the Government of Bengal (offg.).*

## DEPARTMENT OF AGRICULTURE AND INDUSTRIES.

### EXCISE.

### NOTIFICATIONS.

**Minister in charge: The Hon'ble Nawab Saiyid Nawab Ali Chaudhuri, Khan Bahadur, C.I.E.**

*No. 2578Ex.—The 11th July 1923.*—Mr. J. C. Platts, Superintendent of Excise and Salt, is allowed leave on average pay for four months and two days (the entire period being on account of privilege leave at his credit), under article 81 (*b*) (*ii*) of the Fundamental Rules, with effect from the 1st July 1923.

**Minister in charge: The Hon'ble Nawab Saiyid Nawab Ali Chaudhuri, Khan Bahadur, C.I.E.**

*No. 2602Ex.—The 12th July 1923.*—In exercise of the power conferred by section 5 of the Opium Act, 1878 (I of 1878), and with the previous approval of the Governor-General in Council, the Government of Bengal (Ministry of Agriculture and Public

Works) are pleased to direct that the following amendment be made in the rules published under the Bengal Government Notification No. 5618.R., dated the 2nd March 1918, as subsequently amended, namely :—

To the schedule of exempted preparations annexed to rule 34 of the said rules *add* the following :—

13. Apomorphinæ Hydrochloridum.
14 Codeina.
15. Mono-ethyl-Morphinæ Hydrochloridum-Dionin.

**Minister in charge : The Hon'ble Nawab Saiyid Nawab Ali Chaudhuri, Khan Bahadur, C.I.E.**

*No. 2603Ex.—The 12th July 1923.*—In exercise of the power conferred by section 5 of the Opium Act, 1878 (I of 1878), and with the previous approval of the Governor-General in Council, the Government of Bengal (Ministry of Agriculture and Public Works) are pleased to direct that the following amendment be made in the rules published under the Bengal Government Notification No. 5628.R, dated the 2nd March 1918, as subsequently amended, namely —

To the schedule of exempted preparations annexed to rule 64 of the said rules *add* the following :—

12. Cotarnina

J T DONOVAN,
*Secretary to the Government of Bengal (offg ).*

## Orders by the Registrar of Co-operative Societies, Bengal.

*No. 11050.—The 13th July 1923.*—Whereas I am of opinion, as the result of an enquiry held into the constitution, working and financial condition of the Badiatola Gramya Rindan Samity (registered No 443 of 1914), in the district of Jessore, under sub section (*1*) of section 35 of the Co-operative Societies Act, II of 1912, that the society ought to be dissolved

Now, therefore, in exercise of the power conferred by sub-section (*1*) of section 39 of the same Act, I hereby cancel the registration of the said society

And further, in exercise of the power conferred by sub-section (*1*) of section 42 of the same Act, I hereby appoint the Circle Officer, Sadar, Jessore, to be liquidator of the said society

*No. 11085.—The 14th July 1923.*—Whereas I am of opinion, as the result of an enquiry held into the constitution, working and financial condition of the Rajibpur Co-operative Bank (registered No 110 of 1914), in the district of Nadia, under sub-section (*1*) of section 35 of the Co-operative Societies Act, II of 1912, that the society ought to be dissolved.

Now, therefore, in exercise of the power conferred by sub-section (*1*) of section 39 of the same Act, I hereby cancel the registration of the said society

And further, in exercise of the power conferred by sub-section (*1*) of section 42 of the same Act, I hereby appoint the Circle Officer, Nadia, Sadar, to be liquidator of the said society.

J. M. MITRA,
*Registrar of Co-operative Societies, Bengal.*

## REVENUE DEPARTMENT.

### LAND REVENUE.

### NOTIFICATIONS.

*No. 4941.—The 11th July 1923.*—Babu Sashi Bhusan Ghosh, Sub-Deputy Collector, employed as Technical Advisor to the Settlement Officer in the districts of Pabna and Bogra, is allowed leave on average pay, under article 81 (*b*) (*ii*) of the Fundamental Rules, for twenty days, with effect from the 9th July 1923.

**Pabna. Bogra.**

*No. 5219L.R.—The 12th July 1923.*—In exercise of the powers conferred by section 103B, sub-section (*2*) of the Bengal Tenancy Act, 1885 (Act VIII of 1885), the Governor in Council is pleased to declare that a record-of-rights has been finally published under section 103A, sub-section (*2*) of the said Act, in respect of every village included in police-stations Bongaon, Sarsa, Maheshpur and Gaighata, in the district of Jessore.

**Jessore.**

*No. 5240L.R.—The 13th July 1923.*—Babu Phani Bhushan Mitra, Deputy Collector, employed as Manager of the Contai Khas Mahals in the district of Midnapore, is allowed leave on average pay, under article 81 (*b*) (*ii*) of the Fundamental Rules, for three months (entirely on account of privilege leave at his credit), with effect from the 14th July 1923.

Midnapore.

*No. 5265L.R.—The 13th July 1923.*—Babu Abinash Chandra Mitra, District Engineer, Chittagong Hill Tracts, is allowed leave on average pay for five months and seven days (the entire period being on account of privilege leave at his credit), under article 81 (*b*) (*ii*) of the Fundamental Rules, with effect from the date on which he may avail himself of it.

Chittagong Hill Tracts.

*No. 5266L.R.—The 13th July 1923.*—Babu Mohini Mohan Mitra, Overseer, Rangamati, in the Chittagong Hill Tracts, is appointed temporarily to act as the District Engineer of that district, during the absence, on leave, of Babu Abinash Chandra Mitra, or until further orders.

Chittagong Hill Tracts.

M. C. MCALPIN,
*Secretary to the Government of Bengal.*

---

## LAND ACQUISITION.

*No. 5133L.A.—The 10th July 1923.*—In exercise of the powers conferred by section 48 (*1*) of the Land Acquisition Act, I of 1894, the Governor in Council is pleased to withdraw from the acquisition of three pieces of land, altogether measuring, more or less, 8·14 acres, situated in mauzas Kuarpur, Gopalpur, Bartoria, Barachak and Baradhemo, bounded as described below, which were included in the area notified for acquisition under declaration No. 8539L.A., dated the 22nd September 1921, published at pages 1626-27, Part I of the *Calcutta Gazette* of the 28th idem, as amended by subsequent erratum No. 5132L.A., dated the 10th July 1923, and required by the East Indian Railway Company for the second up line between Asansol and Sitarampur, in the villages of Kuarpur, Gopalpur, etc., parganas Shergarh and Kanthanagar, zilla Burdwan :—

Burdwan.

BOUNDARIES

PLOT A.

Miles 134 and 135—Villages Kuarpur and Gopalpur (area 6·85 acres).

*North and East*—By the lands of the Government camping ground and the East Indian Railway Company.

*South*—By the lands of C. K. Chatter, Bishu Ghose, Rajani Kanta Mukherjee Khudiram Mukherjee, Dakshyabala Debya, Sambhu Ghose, Ramla Mondal, Uday Khan, Ram Kia Shekh, Khudu Shekh, E. C. Agabeg Esq., Akla Shekh, Chuna Shekh, Ali Bux Shekh, Shristi Bauri and Kalipada Chatterjee.

*West*—By the lands of Kalipada Chatterjee.

PLOT B.

Miles 135 and 136—Villages Bartoria and Barachak (area 1·25 acres).

*North, East and West*—By the lands of the East Indian Railway Company

*South*—By the lands of Ramesh Chandra Chatterjee, Maharaja of Kashimbazar, Messrs. Apcar & Co., and Bibhuti Bhusan Mukherjee.

PLOT C.

Mile 137—Village Baradhemo (area 0·04 acre).

*North, East and West*—By the lands of the East Indian Railway Company acquired for second up line between Asansol and Sitarampur.

*South*—By the land of W. N. Irvin, Esq.

*No. 5258L.A.—The 13th July 1923.*—In exercise of the powers conferred by section 48 (*1*) of the Land Acquisition Act, I of 1894, the Governor in Council is pleased to withdraw from the acquisition of a piece of land measuring, more or less, 1 cottah 3 chitaks and 12 square feet of standard measurement, equivalent to ·0198 of an acre, being a portion of premises No. 59, Park Street, and bounded as described below, which was included in the area notified for acquisition under declaration No. 347L.A., dated the 10th January 1919, published at

Calcutta.

page 36, Part I of the *Calcutta Gazette* of the 15th idem and required for scheme No. XII of the Calcutta Improvement Trust (Park Street widening) from Chowringhee Road to Wellesley Street in ward No. XVI of the Calcutta Municipality.

*Boundaries.*

*North and East*—By premises No. 59, Park Street.
*South*—By Park Street.
*West*—By premises No. 41, Free School Street.

Hooghly.

*No. 5261L.A.—The 13th July 1923.*—In exercise of the power conferred by section 48 (*1*) of the Land Acquisition Act, I of 1894, the Governor in Council is pleased to withdraw from the acquisition of the additional piece of land measuring, more or less, 2 cottahs 9 42 chitaks of standard measurement, equivalent to ·013 of an acre and bounded as described below, which was covered by declaration No. 2490L A, dated the 8th March 1923, published at page 342, Part I of the *Calcutta Gazette* of the 14th idem, and required by the Chairman, Serampore Municipality, for opening out a road between Khatir Bazar Road and Baisnabpara Lane, in the village of Mahesh, pargana Boro, zilla Hooghly.

PLOT A.

*North, South and West*—By land of Sarat Chandra Chakraburtty
*East*—By land already acquired under declaration No. 4427L.A, dated the 30th May 1921.

PLOT B.

*North and South*—By land of Sarat Chandra Chakraburtty
*East*—By land of Sarat Chandra Chakraburtty and foot-path
*West*—By land already acquired under declaration No. 4427L.A., dated 30th May 1921

Hooghly.

*No. 5289L A.—The 14th July 1923*—Whereas it appears to the Governor in Council that land is likely to be required to be taken by the Government at the expense of the East Indian Railway Company for a public purpose, viz., for opening a brick-field of the East Indian Railway in the villages Bhawanipur Char, Jirat, Hathkhanda, Pranpur, Gopalpur, Hasimpur, Baruipara, Rukashpur, Baneswarpur, Muktarpur, Sije, Kamalpur and Srikrishnapur, parganas Raipur, Hatikandi, Arsa, Selampur, Ukhra and Panchpur, district Hooghly, it is hereby notified that for the above purpose a piece of land bounded by the Bhagirathi river on the east, Bandel-Barharwa branch of the East Indian Railway on the west and on the line east and west through East Indian Railway, Jirat station on the north and on the line east and west through East Indian Railway, and Khamargachi station on the south, is likely to be required within the aforesaid villages of Bhawanipur Char, Jirat, Hathkhanda, Pranpur, Gopalpur, Hasimpur, Baruipara, Rukashpur, Baneswarpur, Muktarpur, Sije, Kamalpur and Srikrishnapur.

This notification is made, under the provisions of section 4 of Act I of 1894, to all whom it may concern

In exercise of the powers conferred by the aforesaid section, the Governor in Council is pleased to authorize the Engineers of the East Indian Railway Company, for the time being engaged in the undertaking, with their servants and workmen, to enter upon and survey the land and do all other acts required for the proper execution of their work as provided for or specified in the said section.

The general route to be taken for the survey will be from the East Indian Railway Khamargachi station and will terminate at the Jirat station of that railway.

M C. MCALPIN,
*Secretary to the Government of Bengal.*

---

ERRATUM.

Burdwan.

*No. 5132L.A.—The 10th July 1923.*—In lines 5 and 6 and 42 and 43 of declaration No. 8539L A., dated the 22nd September 1921, published at pages 1626-27, Part I of the *Calcutta Gazette* of the 28th idem, in respect of the acquisition of land required by the East Indian Railway Company for the second up line between Asansol and Sitarampur in the district of Burdwan, *for* the words "villages of Kuarpur, Gopalpur, Bartoray, Barachak, Baradhemo and Sitarampur" *read* "villages of Kuarpur, Gopalpur, Bartoria, Barachak, Lalpur, Baradhemo *alias* Dhemokala and Sitarampur."

M C MCALPIN,
*Secretary to the Government of Bengal.*

## DECLARATION.

Tippera.

*No. 5204L.A.—The 12th July 1923* — Whereas it appears to the Governor in Council that land is required to be taken by Government at the public expense for a public purpose, viz, for Barapara Girls' School, in the village of Barapara, pargana Bardakhat, zilla Tippera, it is hereby declared that for the above purpose a piece of land measuring, more or less, 2 bighas 8 cottahs and 13 chitaks of standard measurement, equivalent to 0·806 of an acre, bounded on the—

*North*—By cadastral survey plot No. 91 and parts of plots Nos. 90 and 92,
*East*—By cadastral survey plots Nos 93 and 94,
*South*—By cadastral survey plots Nos 94 and 96,
*West*—By parts of cadastral survey plots Nos. 90 and 95,

is required within the aforesaid village of Barapara.

This declaration is made, under the provisions of section 6 of Act I of 1894, to all whom it may concern.

A plan of the land may be inspected in the office of the Collector of Tippera.

M C. MCALPIN,
*Secretary to the Government of Bengal.*

## DECLARATION.

24-Parganas.

*No 5248L A —The 13th July 1923* —Whereas it appears to the Governor in Council that land is required to be taken by Government at the public expense for a public purpose, viz, for the Sarangabad High School, in the village of Sarangabad pargana Magura, zilla 24-Parganas, it is hereby declared that for the above purpose a piece of land measuring, more or less, 1·3223 acres, bounded on the—

*North*—By the drain of Budge-Budge road,
*East*—By the land of Krishna Chandra Sarkar,
*South*—By the lands of Gobardhan Haldar, Mahendra Manna, Nilmoni Sarkar and Krishna Chandra Sarkar,
*West*—By the Sarangabad High School land and by the lands of Gobardhan Haldar, Mahendra Manna, Nilmoni Sarcar and Krishna Chandra Sarkar and drain of Budge-Budge road,

is required within the aforesaid village of Sarangabad

This declaration is made, under the provisions of section 6 of Act I of 1894, to all whom it may concern.

A plan of the land may be inspected in the office of the Inspector of Schools, Presidency Division.

M C. MCALPIN,
*Secretary to the Government of Bengal.*

## DECLARATION

Hooghly.

*No. 5251L A.—The 13th July 1923.*—Whereas it appears to the Governor in Council that land is required to be taken by Government at the public expense for a public purpose, viz, for the construction of a Regulator at Balidanga (Gorolmuri), in the village of Balidanga, pargana Haball, zilla Hooghly, it is hereby declared that for the above purpose, a piece of land measuring, more or less, 6 bighas 9 cottahs and 8 chitaks of standard measurement, equivalent to 2·14 acres, bounded on the—

### PLOT NO. I:

*North*—By Gorolmuri village channel and land of Nani Lal Dey,
*East*—By land of Akkori Bag,
*South*—By land of Audhar Chandra Pal and others,
*West*—By village road,

### PLOT NO. II:

*North*—By land of Nani Lal Dey,
*East and South*—By lands of Akkori Bag and others,
*West*—By village road,

PLOT NO. VI :

*North*—By lands of Audhar Chandra Pal and others,
*East*—By land of Ram Dulal Roy,
*South*—By Gorolmuri village channel and Government land,
*West*—By Government land and land of Ram Dulal Roy,

PLOT NO. IX :

*North*—By land of Upendra Nath Das and Kananadi,
*East*—By lands of Upendra Nath Das, Ram Charan Patra and Hari Charan Koley and others,
*South*—By Kananadi and land of Bhut Nath Koley and Hari Charan Koley and others and new escape channel,
*West*—By lands of Upendra Nath Das, Ram Charan Patra, Hari Charan Koley and Bhut Nath Koley,

PLOT NO. X

*North*—By lands of Upendra Nath Das and Hari Charan Koley and others,
*East*—By lands of Ram Charan Patra, Hari Charan Koley and others, and Kananadi,
*South and West*—By lands of Hari Charan Koley and others and Ram Charan Patra,

is required within the aforesaid village of Bahdanga.

This declaration is made, under the provisions of section 6 of Act I of 1894, to all whom it may concern.

A plan of the land may be inspected in the office of the Collector of Hooghly

M. C MCALPIN,
*Secretary to the Government of Bengal.*

DECLARATION

Bakarganj.

*No. 5299 L.A.—The 14th July 1923*—Whereas it appears to the Governor in Council that land is required to be taken by Government at the expense of the District Board of Bakarganj for a public purpose, viz., for a tank at Hotkhali, in the village of South Halta, pargana Saidpur, zilla Bakarganj, it is hereby declared that for the above purpose a piece of land measuring, more or less, 1·14 acres, bounded on the—

*North*—By the remaining portions of plots Nos. 2110 and 2111,
*East*—By ditto ditto „ 2048 and 2110,
*South*—By ditto ditto „ 1965 and 2048,
*West*—By plot No. 1965 and the remaining portion of plot No. 2111,

is required within the aforesaid village of South Halta.

This declaration is made, under the provisions of section 6 of Act I of 1894, to all whom it may concern.

A plan of the land may be inspected in the office of the Subdivisional Officer, Pirojpur.

M. C. MCALPIN,
*Secretary to the Government of Bengal.*

DECLARATION.

Dacca.

*No. 5302L.A.—The 14th July 1923.*—Whereas it appears to the Governor in Council that land is required to be taken by Government at the expense of Bhagyakul Union Board for a public purpose, viz, for connecting the Bhagyakul path with the path to Jagannathpatty in mauza Kamargaon, in the village

of Kamargaon, pargana Narullapur, zilla Dacca, it is hereby declared that for the above purpose a piece of land measuring, more or less, 0·355 of an acre, bounded on the—

*North*—By the existing path from Bhagyakul,
*East*—By the remaining portions of the cadastral survey plots Nos. 1981 1983, 1984, 2003, 2004 and 2005 and existing path from Bhagyakul,
*South*—By the existing path to Jagannathpatty,
*West*—By the cadastral survey plots Nos. 2006, 2016, 2017 and 2019 and remaining portions of the cadastral survey plots Nos. 2026, 1980 and 1979,

is required within the aforesaid village of Kamargaon.

This declaration is made, under the provisions of section 6 of Act I of 1894, to all whom it may concern.

A plan of the land may be inspected in the office of the Subdivisional Officer Munshiganj.

M. C MCALPIN,
*Secretary to the Government of Bengal.*

---

**FOREST.**

*No 5144For.—The 11th July 1923*—Babu Jitendra Nath Sen Gupta, having passed the final examination of the Provincial Forest Service Course at the Forest Research Institute and College, Dehra Dun, is appointed to be a Probationary Extra Assistant Conservator of Forests, Bengal, with effect from the 9th April 1923.

M. C. MCALPIN,
*Secretary to the Government of Bengal*

---

**Orders by the Conservator of Forests, Bengal.**

---

**Sundarbans.**

*No. 18For.—The 27th June 1923.*—Babu Priya Nath Sarkar, Extra Assistant Conservator of Forests, is allowed leave on average pay for twenty-nine days, under article 81 (*b*) (*ii*) of the Fundamental Rules, with effect from 1st July 1923, or any subsequent date from which he may avail himself of the same.

**Kurseong.**

*No 19For.—The 27th June 1923*—Babu Surendra Kumar Dutt, Extra Assistant Conservator of Forests, is allowed leave on average pay for two months, under article 81 (*b*) (*ii*) of the Fundamental Rules, with effect from the 11th June 1923, or any subsequent date from which he may avail himself of the same.

E O. SHEBBEARE,
*Conservator of Forests, Bengal (offg.).*

---

**Orders by the Inspector-General of Prisons, Bengal.**

---

*No. 10008, dated Calcutta, the 10th July 1923.*—Major N. S. Simpson, I.M.S., made over charge of the Dacca Central Jail to Captain B. G. Mallya, I.M.S., on the afternoon of the 2nd July 1923.

F. S. C. THOMPSON, LT.-COL., I.M.S.,
*Inspector-General of Prisons, Bengal.*

---

**SHERIFF'S OFFICE, THE 11TH JULY 1923.**

NOTICE is hereby given that the Fourth Criminal Sessions of the year 1923 of the High Court of Judicature at Fort William in Bengal, for the town of Calcutta and Factory of Fort William, and the places subordinate thereto, will be held at the Court House, in the town of Calcutta, on Monday, the 30th day of July instant, at 11 o'clock in the forenoon, and thenceforward from day to day until the said sessions be over. And it is hereby proclaimed that all persons who are to prosecute any of the prisoners to be brought up for trial at the said sessions be present then and there to prosecute.

M. M. ALI NAKEY, *Sheriff.*

সরিফ-আফিস সন ১৯২৩ সাল তারিখ ১১ই জুলাই।

সকলকে সমাচার দেওয়া যাইতেছে যে সুবে বাঙ্গালার ফোর্ট উইলিয়ম দুর্গের অধীন সহর কলিকাতার ও অন্যান্য স্থানের ফৌজদারী বিচার নিষ্পত্তি জন্য আগামী সন ১৯২৩ সালের ৩০শে জুলাই সোমবার বেলা ১১ ঘটিকার সময় এবং যে পর্য্যন্ত সেশিয়ানের কার্য্য শেষ না হয় প্রতিদিন উক্ত সময়ে কলিকাতার হাইকোর্টের আপন আদালত ঘরে সন ১৯২৩ সালের চতুর্থ ক্রিমিনেল সেশিয়ান বসিবেক এবং এতদ্দ্বারা প্রচার করা যাইতেছে যে যে সকল ব্যক্তি কোন কয়েদির বিরুদ্ধে ফৌজদারী মিছিল করিবেক তাহারা উক্ত স্থানে উক্ত সময়ে হাজির থাকিয়া মোকদ্দমা করে, ইতি।—

এম, এম, আলি নকি,
সরিফ।

## HIGH COURT NOTICES.

IT is ordered that rule 15 of Chapter XVI of "The Rules of the High Court, 1914," be amended by inserting the following rule with effect from the 1st day of August 1923 —

*15A* In all cases in which the decree in a mortgage suit provides for the sale of the mortgaged premises or of any part thereof such sale shall be held by the Registrar unless for special reasons to be stated in writing the Court passing the decree otherwise directs.

L SANDERSON
ASUTOSH MOOKERJEE
N R. CHATTERJEA
T W RICHARDSON
H WALMSLEY
W E GREAVES
B B NEWBOULD
G C RANKIN.
C C GHOSE
P L. BUCKLAND
Z SUHRAWARDY
A H CUMING.
H G. PEARSON
B. B GHOSE.
E PANTON
A. PAGE
A J. CHOTZNER.

---

### ENGLISH DEPARTMENT—CIVIL.

General letter No. 5, dated Calcutta, the 16th June 1923.

From—N. G. A. EDGLEY, ESQ., I.C.S, Registrar of the High Court of Judicature at Fort William in Bengal, Appellate Side,

To—The District Judges of Bakarganj, Bankura, Birbhum, Burdwan, Chittagong, Dacca, Dinajpur, Faridpur, Hooghly, Jessore, Khulna, Midnapore, Murshidabad, Mymensingh, Nadia, Noakhali, Pabna-Bogra, Rajshahi, Rangpur, Sylhet, Tippera and the 24-Parganas; the Judge of the Assam Valley Districts, the Additional District Judges of the 24-Parganas, Bakarganj, Sylhet, Tippera and Chittagong, Jessore-Khulna, Dacca, Midnapore-Burdwan, Mymensingh, Faridpur and Hooghly (Howrah), the 2nd Additional District Judges of Mymensingh and the 24-Parganas.

In continuation of the Court's General letter No. 7, dated the 28th May 1921, I am directed to state, for your information and for communication to the courts subordinate to you, that the name of Babu Upendra Nath Chatarji (Serial No 11, Roll No. 10 of 1892), mentioned in the Court's General letter No. 13, dated the 31st August 1917, has been restored to the Roll of Vakils of this Court at his own request

General Letter No. 9, dated Calcutta, the 10th July 1923.

From—N. G. A. EDLGEY, ESQ., I.C.S., Registrar of the High Court of Judicature at Fort William in Bengal, Appellate Side,

To—The District Judges of Bengal and Assam.

SUBJECT :—*Alterations in the Holiday List for 1923.*

I am directed to request that the following alterations may be made in the list of days to be observed in 1923 as close holidays in the civil courts subordinate to the High Court, forwarded with General Letter No. 17, dated the 12th December 1922 :—

| Names of Holidays | English Date | Bengali Date | Days of the week | Number of days. | Remarks |
|---|---|---|---|---|---|
| | | *Cancel* | | | |
| Rath Jatra .. | July 15th | Assar (1330) 30th | Sunday ... | 1 day | |
| | | *Substitute* | | | |
| Rath Jatra ... | July 16th | Assar (1330) 31st | Monday | 1 day | |
| | | *Cancel* | | | |
| Ultra Rath (m) .. | July 22nd | Sraban (1330) 6th | Sunday . | 1 day | (m) This holiday is not to be observed in the districts of Chittagong, Mymensingh, Noakhali, Rangpur, Sylhet and Assam Valley, nor at Dubrajpur in the district of Birbhum |
| | | *Substitute* | | | |
| Ulta Rath (m) ... | July 23rd | Sraban (1330) 7th | Monday | 1 day | (m) This holiday is not to be observed in the districts of Chittagong, Mymensingh, Noakhali, Rangpur, Sylhet and Assam Valley, nor at Dubrajpur in the district of Birbhum. |

## ORIGINAL SIDE.

*The 13th July 1923*

THE Hon'ble the Chief Justice has been pleased to grant to Mr. George McDonald Falkner, Official Assignee of this Court, leave for four months and five days, with effect from the 12th July 1923, and has appointed Mr. Charles Oliver Remfry, Barrister-at-Law, to act as Official Assignee during the absence, on leave, of Mr. George McDonald Falkner, or until further orders.

By order, etc.,

S. C. MITRA, *Registrar (offg.).*

## ORDERS BY COMMISSIONERS OF DIVISIONS.

### NOTIFICATION

*No. 194R.G.*—Maulvi Shaikh Abdullah (No. II), Sub-Deputy Collector, on leave, is posted to the headquarters station of the district of Nadia.

J. M. CHATARJI, *Personal Assistant*, for *Commissioner (on tour).*

COMMR.'S OFFICE, PRESY. DIVN., CALCUTTA, *the 9th July 1923.*

## NOTIFICATION.

*No. 2292J.G.*—Babu Himangsu Jyoti Mazumdar, Sub-Deputy Collector, Burdwan Sadar, is allowed leave on average pay for two weeks, with effect from the 4th July 1923, under rule 81 (*b*) (*ii*) of the Fundamental Rules.

J. N. GUPTA, *Commissioner.*

COMMR.'S OFFICE, BURDWAN DIVN., CHINSURA, *the 9th July 1923.*

---

## NOTIFICATION.

*No. 2676J.*—Maulvi Muhammad Theruddin, Sub-Deputy Collector, Rajshahi Division, is posted to the headquarters station of the Rajshahi district.

The orders of the 27th June 1923, posting him to Malda, are cancelled.

W. A. MARR, *Commissioner (offg.).*

COMMR.'S OFFICE, RAJSHAHI DIVISION, JALPAIGURI, *the 11th July 1923.*

---

## NOTIFICATION.

*No. 3762J.*—Babu Jatindra Kumar Mazumdar, Sub-Deputy Collector on probation, who has been posted to the Dacca Division, in Government notification No 6439A., dated the 28th June 1923, is posted to the headquarters station of the Faridpur district.

A. N. MOBERLY, *Commissioner (offg.)*

COMMR.'S OFFICE, DACCA DIVN., DACCA, *the 11th July 1923*

---

## NOTIFICATION.

*No. 2853 J.*—Babu Kailaspati Ghose, Sub-Deputy Collector, Chittagong, is transferred to Kutubdia in the Cox's Bazar subdivision in the Chittagong district.

Maulvi Abdul Karim, No. II, Sub-Deputy Collector, Kutubdia, is transferred to the headquarters station of the Chittagong district.

A. H. CLAYTON, *Commissioner (offg.).*

COMMR.'S OFFICE, CHITTAGONG DIVN., CHITTAGONG, *the 12th July 1923.*

---

## NOTIFICATION.

*No. 3196J.*—Babu Naba Gopal Ray, Sub-Deputy Collector and Circle Officer, Netrakona, in the district of Mymensingh, is placed on general duty to that station.

A. N. MOBERLY, *Commissioner (offg.).*

COMMR.'S OFFICE, DACCA DIVN., DACCA, *the 12th July 1923.*

---

## NOTIFICATION.

*No. 2633J.*—The following gentlemen are appointed to be non-official visitors of the Pabna Jail for the periods mentioned against their names :—

| | | |
|---|---|---|
| 1. | Khan Bahadur Maulvi Wasimuddin Ahmed, B.L., M.L.C. ... | For the period of his membership of the Bengal Legislative Council. |
| 2. | Rai Prasanna Narayan Chaudhuri Bahadur } ... | ... For two years. |
| 3. | Babu Jogendra Nath Maitra. } | |

W. A. MARR, *Commissioner (offg.).*

COMMR.'S OFFICE, RAJSHAHI DIVN., JALPAIGURI, *the 8th July 1923.*

## NOTIFICATION.

*No. 3151J.*—It is hereby notified for general information that, in the general election held in the month of November 1922, the following gentlemen were duly elected to be members of the undermentioned Local Boards, in the district of Mymensingh, for the police-stations noted against their names :—

| Names of police-stations for which elected | | Names of gentlemen elected |
|---|---|---|
| | | *Sadar Local Board.* |
| Kotwali | ... | 1. Maulvi Abdul Hakim. |
| Trisal | ... | 2. Munshi Mahammed Hosseinali Sarkar. |
| Muktagacha | ... | 3. Babu Dhirendra Chandra Chakravarty, B.L |
| Fulbaria | ... | 4. Maulvi Abdul Karim Khan. |
| Bhaluka | ... | 5. Babu Ramesh Chandra Sen, B.L. |
| Gaffargaon | ... | 6. Munshi Muhammad Ijjatulla.<br>7. Maulvi Afazuddin Ahmed, B.L. |
| Iswarganj | ... | 8. Babu Mukunda Chandra Choudhuri, B.L.<br>9. Maulvi Md. Sadi Abbas |
| Nandail | ... | 10. Maulvi Muhammad Saberuddin Ahmed.<br>11. " Md Abdul Bari Khan. |
| Fulpur | ... | 12. Babu Jagat Chandra Sarkar<br>13 Munshi Rastamali Ahmed |
| Haluaghat | .. | 14. Munshi Muhammad Abdul Hushen. |
| | | *Tangail Local Board.* |
| Tangail | ... | 1. Munshi Syed Nurul Huda<br>2. Babu Rasik Chandra Nag B.L. |
| Kalihati | ... | 3. Maulvi Muhammad Nur-ur-Rahman Khan, B.L.<br>4. " Abdul Hamid Choudhury. |
| Ghatail | ... | 5. Maulvi Abdul Karim Khan, B L. |
| Madhupur | ... | 6. Babu Durgesh Chandra Neogi. |
| Gopalpur | ... | 7. Babu Dwijendra Nath Bose.<br>8. Munshi Joyenuddin Khan. |
| Sarishabari | ... | 9. Munshi Sherajali Choudhury. |
| Basail | ... | 10. Babu Charu Chandra Ray, B L. |
| Mirzapur | ... | 11. Babu Kedar Nath Sarkar.<br>12. Maulvi Khandkar Arhamuddin, M.L.C. |
| Nagarpur | ... | 13. Munshi Fakaruddin Ahmed.<br>14. Babu Sailaja Mohan Ghosh. |
| | | *Kishoreganj Local Board.* |
| Bhairab | ... | 1. Munshi Amzatali Sarkar |
| Kuliarchar | ... | 2. Babu Uma Nath Roy. |
| Bajitpur | ... | 3. Maulvi Khurshid Mia. |
| Katiadi | ... | 4. Babu Purna Chandra Roy. |
| Pakundia | ... | 5. Munshi Asufuddin. |
| Kishoreganj | ... | 6. Munshi Abdul Hekim Khan. |
| Hossainpur | ... | 7. Munshi Fajarali. |
| Itna | ... | 8. Babu Suresh Chandra Chakravarty, B.L. |
| Tarail | ... | 9. Maulvi Abdul Wadud Choudhury, B.L. |
| Mitamain | ... | 10. Babu Krishna Govinda Das Mahalanavis. |
| Karimganj | ... | 11. Maulvi Abdul Gani Khan. |
| Nikli and Astagram | ... | 12. Maulvi Nazirul Haque. |
| | | *Netrokona Local Board.* |
| Netrokona | ... | 1. Munshi Abbasuddin Taluqdar. |
| Kendua | ... | 2. Maulvi Mizazuddin Khan. |
| Atpara | ... | 3. Babu Saroj Kumar Patranavis. |
| Madan | ... | 4. Munshi Mahizzama Khan Choudhury. |
| Khaliajuri | ... | 5. Babu Lalit Chandra Chakravarty. |
| Mohanganj | ... | 6. Munshi Abdul Gani Khan. |
| Barhatta | ... | 7. Babu Mohim Mohan Gun. |
| Kalmakanda | .. | 8. Maulvi Elahi Newaz Khan. |
| Durgapur | ... | 9. Babu Charu Chandra Sinha. |
| Purbadhala | ... | 10. Munshi Muhammad Nurul Hussain. |

| Names of police-stations for which elected | Names of gentlemen elected |
|---|---|
| | *Jamalpur Local Board.* |
| Jamalpur ... | 1. Munshi Mir Ahamad Ali.<br>2. Hazi Md. Kutibuddin. |
| Melanda ... | 3. Munshi Md. Maniruddin Mia |
| Madarganj ... | 4. Munshi Md. Darbeshuddin. |
| Dewanganj ... | 5. Munshi Nurul Huque. |
| Islampur ... | 6. Maulvi Muhammad Abdul Jabbar. |
| Sherpur ... | 7. Munshi Md. Majidali Sarkar.<br>8. „ Md. Khosh Mahmud Choudhury |
| Sribardi ... | 9. Munshi Golam Muhammad. |
| Nalitabari ... | 10. Munshi Mir Jamaluddin.<br>11 „ Mir Refuzuddin Khandkar. |
| Nakla ... | 12. Shah Tahiruddin Ahmed. |

2. In exercise of the powers conferred on me by section 11 of the Local Self-Government Act (Bengal Act III of 1885) and acting under the orders of the Local Government given in the exercise of the administrative control vested in them by section 29B of the same Act, I hereby appoint the following gentlemen to be members of the Local Boards in the district of Mymensingh as noted below :—

*Sadar Local Board*

1. The Circle Officer, Sadar south .. ... *Ex officio.*
2. Khan Saheb Maulvi Saheb Ali.
3. Maulvi Sahebuddin Ahmed.
4. „ Sharatuddin Ahmed.
5. „ Ali Hussain
6. Babu Benoy Charan Roy, M A, B L
7. „ Hemanta Kumar Biswas, M.A, B.L

*Tangail Local Board*

1. Syed Muhammad Hussain Choudhury
2. „ Abul Hussain Muhammad Ali
3. Khondkar Aftabuddin Ahmed.
4. Munshi Jimatali Ahmed.
5. Mr. J. E. Ward.
6. Babu Jagadish Chandra Bakshi.
7. „ Purnendu Mohan Ghosh.

*Kishoreganj Local Board*

1. The Circle Officer, Kishoreganj ... ... *Ex officio.*
2. Maulvi Moshuddin Ahmed
3. Babu Jyotish Chandra Nandi
4. Maulvi Abdus Sabur.
5. Babu Prokash Chandra Nandi.
6. The Rev. F. E. Blackman.

*Netrokona Local Board*

1. The Subdivisional Inspector of Schools ... ... } *Ex officio.*
2. The Circle Officer, Netrokona ... ... }
3. Maulvi Abul Hussain Ahmed, B.L
4. Babu Ram Kumar Ain.
5. „ Radha Nath Dutt.

*Jamalpur Local Board*

1. The Circle Officer, Jamalpur ... ... ... *Ex officio.*
2. Babu Jnanendra Charan Guha.
3. „ Nalini Kanta Ghosh.
4. Maulvi Waluddin Ahmed.
5. Babu Bidhan Bhusan Das.
6. Maulvi Muhammad Abdus Samad.

A. N. MORERLY, *Commissioner (offg.).*

COMMR.'S OFFICE, DACCA DIVN., DACCA, *the 10th July 1923.*

## NOTIFICATION.

NOTICE is hereby given that there will be a bye-election of a member of the Sadar local board in each of the thanas Wazirpur and Mehendiganj in the district of Bakarganj. The votes will be recorded at the following polling centres on the dates noted against each :—

| Name of police-station. | Name of polling centre. | Date of polling. | Hour of polling. |
|---|---|---|---|
| | | 1922. | |
| Wazirpur | ... Wazirpur police-station ... | 17th September | 11 A.M. to 4 P.M. |
| Mehendiganj | Lata ... ... | 17th " | 11 " " 4 " |
| | Mehendiganj police-station | 18th " | |

The Registers showing the names of voters shall be open for the inspection of the voters in the office of the District Magistrate of Bakarganj.

W. H. CARTER, *District Magistrate.*

BAKARGANJ, *the 12th July 1923.*

---

## NOTIFICATION.

*No. 20L.S.-G.*—It is hereby notified for general information that, under section 43 of the Bengal Local Self-Government Act, III (B.C.) of 1885, as amended, I appoint Babu Nutu Gopal Bhattacherjee, Tantraratna, M.R.A.S., to be a member of the Lalgola union committee, in the Jangipur subdivision of the Murshidabad district, in place of Babu Barada Charan Majumdar, resigned.

J. H. LINDSAY, *Commissioner (offg.).*

COMMR.'S OFFICE, PRESY. DIVN., CALCUTTA, *the 12th July 1923.*

---

## NOTIFICATION.

*No. 21L.S.-G.*—It is hereby notified for general information that, under section 13 of the Bengal Village Self-Government Act, V of 1919, read with rule 38 of the Rules for the election and appointment of members, etc., of union boards under the said Act, Babu Nani Gopal Sarkar has been duly elected to be a member for Ward No. I of the Babla union board, in police-station Santipur, in the Ranaghat subdivision of the Nadia district, in place of Maulvi Kazi Muhammed Kayem, deceased.

J. H. LINDSAY, *Commissioner (offg.).*

COMMR.'S OFFICE, PRESY. DIVN., CALCUTTA, *the 12th July 1923.*

---

## NOTIFICATION.

*No. 2861G.*—Under section 13 of the Bengal Village Self-Government Act, V of 1919, read with rule 39 of the rules for the appointment of members of union boards, the District Magistrate of Noakhali has appointed Maulvi Abdul Aziz to be a member of the Jalaskara union board, police-station Feni, in the district of Noakhali, in place of Maulvi Abdul Bari, deceased.

M. MAITRA, *Personal Assistant,* for *Commissioner.*

COMMR.'S OFFICE, CHITTAGONG DIVN., CHITTAGONG, *the 13th July 1923.*

---

## NOTIFICATION.

*No. 2864G.*—Under section 13 of the Bengal Village Self-Government Act, V of 1919, read with rule 38 of the rules for the election and appointment of members of union boards, the District Magistrate of Noakhali has declared Sheikh Muhamud Ishaque to be duly elected member of the Sonagazi union board, police-station Sonagazi, in the district of Noakhali, in place of Maulvi Basler Sobhan Choudhury, removed.

M. MAITRA, *Personal Assistant,* for *Commissioner.*

COMMR.'S OFFICE, CHITTAGONG DIVN., CHITTAGONG, *the 13th July 1923.*

# The Calcutta Gazette

WEDNESDAY, JULY 18, 1923.


## PART IA.

### *Orders and Notifications by the Government of India.*

The following notification, issued by the Government of India in the Finance Department, published in the *Gazette of India*, dated the 30th June 1923, is republished for general information.

L. BIRLEY,
*Chief Secretary to the Government of Bengal.*

NOTIFICATION

CUSTOMS DUTIES.

*Simla, the 30th June 1923*

*No 530.*—In exercise of the powers conferred by section 23 of the Sea Customs Act 1878 (VIII of 1878), the Governor General in Council is pleased to direct that the Notification of the Government of India in the Finance and Commerce Department No. 1864 dated the 12th April 1889, be cancelled.

A. C. MCWATTERS,
*Secretary to the Government of India (offg.)*

The following notification, issued by the Government of India in the Legislative Department, published in the *Gazette of India*, dated the 30th June 1923, republished for general information.

L. BIRLEY,
*Chief Secretary to the Government of Bengal.*

NOTIFICATION.

*Simla, the 28th June 1923.*

*No. 121.*—In accordance with the provisions of rule 12 (9) of the Council of State Electoral Rules, the name of the following candidate, who has been declared to be elected

as a Member of the said Council the Hon'ble [illegible] Murray, Kt., C.S.I., resigned, by the constituency mentioned against his name, is hereby published:—

| Name. | Constituency. |
|---|---|
| Sir Robert Middleton Watson-Smyth, Kt. | Bengal Chamber of Commerce. |

L. GRAHAM,
*Secretary to the Government of India.*

---

The following notification, issued by the Government of India in the Home Department, published in the *Gazette of India*, dated the 30th June 1923, is republished for general information.

L. BIRLEY,
*Chief Secretary to the Government of Bengal.*

## NOTIFICATION.

### POLITICAL.

*Simla, the 22nd June 1923.*

*No. D.-1483.*—The services of Mr. P. C. Bamford are replaced at the disposal of the Government of Bengal, with effect from the afternoon of the 15th June 1923.

J. CRERAR,
*Secretary to the Government of India.*

---

The following orders, issued by the Government of India in the Army Department, published in the *Gazette of India*, dated the 7th July 1923, are republished for general information.

L. BIRLEY,
*Chief Secretary to the Government of Bengal.*

*Simla, the 6th July 1923.*

## PART B.

### JUDICIAL.

*No. 928.*—The following draft of an amendment to the Indian Territorial Force Rules, 1921, which it is proposed to make in exercise of the powers conferred by sub-section (*1*) of section 13 of the Indian Territorial Force Act, 1920 (XLVIII of 1920), is published as required by the said sub-section for the information of all persons likely to be affected thereby, and notice is hereby given that the said draft will be taken into consideration on or after the 6th August 1923. Any objection or suggestion which may be received from any person with respect to the draft before the date specified will be considered by the Governor General in Council.

*Draft Amendment.*

In rule 17 of the said rules, after the word "service" the following shall be inserted, namely:—

"or is attached at his own request, under the orders of the Officer Commanding the District, to a unit of the regular forces".

E. BURDON,
*Secretary to the Government of India.*

## Orders by the Senate of the Calcutta University.

### M. A. EXAMINATION, 1925.

### ENGLISH.

COMMON PAPERS FOR GROUPS A AND B.

*Paper I.—General History of English Literature.*

(No text-books.)

*Paper II.—Drama.*

| | |
|---|---|
| Shakespeare | ... Hamlet. |
| Aeschylus | ... Agamemnon (Tr. Morshead). |
| Goethe | ... Faust, Part I (Tr. Taylor). |

*Paper III.—Poetry.*

| | |
|---|---|
| Dante | ... Inferno, Books I-VI (Carey's translation). |
| Milton | ... Paradise Lost, Books I and II. |
| Swinburne | ... Atalanta in Calydon. |

*Paper IV.—Prose*

| | |
|---|---|
| Plato | ... Trial and Death of Socrates (translated by Campbell, Oxford University Press) |
| Burke | ... Speech in Opening the Impeachment of Warren Hastings |
| Walter Pater | ... Renaissance. |

GROUP A.

*Paper V.—(a) Chaucer and (b) Outlines of Historical English Grammar.*

| | |
|---|---|
| (a) Chaucer | ... The Prologue to the Canterbury Tales; Nonne Preestes Tale and Prioresses Tale. |
| (b) Otto Jespersen | ... Growth and Structure of the English Language. (Truebner, Leipzig, 1912.) |
| Classen | ... History of the English Language (Macmillan) |

*Paper VI.—Selected Period of Poetry.*

Early Nineteenth Century Poetry (1798-1832).

The undermentioned authors are recommended for special study in their chief works as specified below, but candidates will not be expected to show a detailed knowledge of the texts named :—

| | |
|---|---|
| Wordsworth | ... Prelude, Books XI, XII, XIII Excursion, Book I. Selections by Matthew Arnold (Golden Treasury Series). |
| Coleridge | ... Selections by Stopford A. Brooke (Golden Book of Coleridge, Dent). |
| Byron | ... Vision of Judgment; Selections by Matthew Arnold (Golden Treasury Series). |
| Shelley | ... Prometheus Unbound; Selections by Stopford A. Brooke (Golden Treasury Series). |
| Keats | ... Hyperion; Eve of St. Agnes; Lamia. |

Golden Treasury of Songs and Lyrics (Palgrave), Book IV.
Selections from English Poets, edited by Ward, Volume IV.

*Paper VII.—Selected Period of Prose.*

Early Nineteenth Century Prose (1798-1832)

The undermentioned authors are recommended for special study in their chief works as specified below; but candidates will not be expected to show a detailed knowledge of the texts named :—

| | |
|---|---|
| Wordsworth | ... Prefaces and Appendices (Oxford Edition) |
| Scott | ... Talisman; Old Mortality, Kenilworth. |
| Coleridge | ... Biographia Litteraria, omitting Chapters 5-9 and 12. |

| | | |
|---|---|---|
| Lamb | ... | Essays of Elia. |
| Landor | ... | Selections by Sidney Colvin (Golden Treasury Series). |
| Jane Austen | ... | Pride and Prejudice. |
| Hazlitt | ... | English Literature, edited by Zeitlin (Oxford University Press). |
| De Quincey | ... | Confessions of an Opium Eater. |
| Shelley | ... | Defence of Poetry. |

*Paper VIII.—Essay or Essays on subjects connected with the course.*

GROUP B.

*Paper V —English Language and Literature prior to 1100 A.D.*

| | | |
|---|---|---|
| Sweet | ... | Anglo-Saxon Reader, Part I, omitting pieces III, XI, XII, XIII, XXIV, XXVII, XXVIII, XXXI, (pieces E—M), XXXII (8th Edn, Clarendon Press, Oxford). |

*Paper VI — English Language and Literature from 1100 A. D. to 1500 A.D, including Chaucer.*

| | | |
|---|---|---|
| Chaucer | ... | Canterbury Tales—Prologue; Knightes Tale; Clerkes Tale; Monkes Tale, Nonne Preestes Tale; Squires Tale, Prioresses Tale, Parlement of Foules |
| Cooke, A. S | ... | A Literary Middle English Reader (Ginn & Co), omitting "Religious and Didactic Pieces" and "Plays" |

The unseen passages set in this Paper will be restricted to portions of Chaucer Gower and Langland not included in the set texts

*Paper VII.—Historical English (Grammar including the Elements of Teutonic Philology).*

Books recommended for study—

| | | |
|---|---|---|
| Wright, J. and E M | ... | Old English Grammar (Oxford University Press). |
| Wyld, H. C. | ... | Historical Study of the Mother Tongue (Murray). |
| Ditto | ... | A Short History of English (Murray) |
| Greenough & Kittredge | ... | Words and their Ways in English Speech (Macmillan) |

SANSKRIT.

The course shall include the following :—

(The books prescribed for the first four papers are common to all the groups)

*Paper I.*—(*a*) Ashtaka I of the Rigveda, with Sayana's commentary thereon.
(*b*) Sayana's introduction to his commentary on the Rigveda.
*Paper II.*—Siddhanta Kaumudi (whole).
*Paper III*—(*a*) Elements of Comparative Philology with special reference to the Indo-Iranian Languages and the growth of the Prakritic dialects.

The following books are recommended :—

Macdonnell, A. A.—Vedic Grammar for Students (Oxford).
Sweet, H.—The History of Language (Dent).
Tucker, T. G.—Introduction to the Natural History of Language (Blackie)
Uhlenbeck, C. C.—A Manual of Sanskrit Phonetics (Luzac).
Whitney, W. D.—Sanskrit Grammar (Truebner).
Encyclopædia Britannica (11th Edition). Article on *Philology*.
*Gune—Introduction to Comparative Philology (Poona).
(*b*) Sabda-sakti-prakasika—Karikas Nos. 2, 3, 4, 12-14, 16-18, 20, 29, 31, 33, 54, 56, 58, 60, 61, 66, 67 and 95.

*Paper IV.*—Two essays—(*a*) dealing with some subject connected with the history of Sanskrit literature generally; (*b*) dealing with some subject connected with the history of the special department covered by the group taken up.

*Papers V, VI, VII and VIII.*—One of the following groups to be selected by the candidate :—

*A.—Literature.*

*Paper V*—Poetry Texts —

| | | |
|---|---|---|
| Naishadha Charita | ... | Canto I with commentary. |
| Kamandakiya Nitisara | ... | Chapters 8, 9, 10 and 11 (pages 37-62). (Jivananda's edition.) |
| Sukra Nitisara | ... | Chapter 4 (pages 507-670). (Jivananda's edition.) |
| Mahabharata | ... | Santiparva, Rajadharma, Chapters 56-60, 68, 69, 86-88 (Pratap Ray's edition). |
| Sisupalavadha | ... | Cantos 5, 6, with Mallinatha's commentary |

(*b*) Translation from English into Sanskrit.

*Paper VI.*—(*a*) Drama Texts. Vikramorvasi, Mrichchhakatika, Venisanhara, Mahaviracharita, Karpuramanjari; Vararuchi's Prakrita Prakasa as is necessary for the appreciation of the Prakrit passages.

(*b*) Translation from English into Sanskrit.

*Paper VII*—(*a*) Prose Texts Vasavadatta Harshacharita, Chapters 5 and 6

(*b*) Unseen passages in Sanskrit Prose for translation into English

*Paper VIII*—(*a*) Rhetoric and Prosody, namely, Kavyaprakasa, Ekavali, Sarasvati kanthabharana, Sahitya-darpana and Chhandomanjari

(*b*) Unseen passages in Sanskrit Poetry for translation into English.

*B.—Vedas.*

*Paper V.*—Yaska's Nirukta and Pingala's Chhandasutras with Halayudha's Vritti, Pratisakhya of the Rigveda, with the commentary of Uvata.

*Paper VI.*—(*a*) Aitareya Brahmana with Sayana's commentary

(*b*) Simple unseen passages in Vedic Sanskrit for translation into classical Sanskrit.

(The interpretation of any recognised Indian School will be accepted.)

*Paper VII*—(*a*) Brihadaranyaka Upanishad, Chapters III and IV, Chhandogya, Chapters V, VI, VII and VIII

(*b*) Simple unseen Sanskrit passages from any Upanishad for translation into English

*Paper VIII*—Grihya-Sutra—Gobhila with commentary

(*b*) Translation from English into Sanskrit

*C.—Mimansa and Smriti*

*Paper V*—(*a*) Mimansa Sutra with Sabara Bhashya, first three chapters.

(*b*) Simple unseen Sanskrit passages from any treatise or commentary on the Mimansa Philosophy, such as the Sloka-Varttika and the Tantra-Varttika for translation into English.

*Paper VI*—(*a*) Jaiminiya Nyaya Mala Vistara and Mimansa Nyaya Prakasa

(*b*) Simple unseen Sanskrit passages from any treatise or commentary on the Mimansa Philosophy, such as the Mimansa-Balaprakasa and the Tup-tika for translation into English

*Paper VII.*—(*a*) Manu Sanhita with Kulluka's commentary.

Dharma Sutras of Apastamba and Gautama with Haradatta's commentary.

(*b*) Grihya Sutra—Gobhila.

*Paper VIII.*—(*a*) Yajnavalkya Sanhita with Vijnanesvara's Mitakshara, Parasara's Institutes with Madhava's commentary.

(*b*) Translation from English into Sanskrit.

*D.—Vedanta.*

*Paper V.*—(*a*) Vedantasara (Jacob's edition), Panchadasi, Vedanta Paribhasha, Hastamalaka (with commentary), and Siddhantaleja.

(*b*) Simple unseen Sanskrit passages from any work on Vedanta Philosophy, such as the Vivaranapramoya-Sangraha for translation into English.

*Paper VI.*—(*a*) Vedanta Sutra with Sankara Bhashya.

(*b*) Translation from English into Sanskrit.

*Paper VII.*—(*a*) Sribhashya, Chapter I, Part I.

(*b*) Advaita Brahma Siddhi

*Paper VIII.*—(*a*) Bhagavadgita; Chhandogya-Upanishad, Chapter VI; Brihadaranyaka, Chapters III, IV; Katha and Mandukya Upanishads with Sankara's commentary.

(*b*) Passages for translation into English from the Anubhashya and the Salvabhashya.

### *E.—Sankhya and Yoga.*

*Paper V.*—(*a*) Sankhya Sutras of Kapila with Vritti of Aniruddha; Sankhya Karika of Isvara-krishna with Bhashya of Gaudapada.

(*b*) Simple unseen Sanskrit passages from any treatise or commentary on the Sankhya Philosophy for translation into English

*Paper VI.*—(*a*) Sankhya Pravachana Bhashya, Sankhyasara and Sankhya Tattva Kaumudi

(*b*) Translation from English into Sanskrit.

*Paper VII.*—(*a*) Yoga Sutras of Patanjali with Bhashya of Vyasa and Vritti of Bhoja. Yoga Varttika of Vijnana Bhikshu.

(*b*) Simple unseen Sanskrit passages from any treatise or commentary on the Yoga Philosophy for translation into English.

*Paper III.*—(*a*) Yoga Vasishtha, Chapter on Nirvana, Part II, Sarvadarsana Sangraha.

(*b*) Translation from English into Sanskrit.

### *F.—Nyaya and Vaiseshika.*

*Paper V.*—(*a*) Nyaya Sutras of Gautama with the Bhashya of Vatsyayana, Varttika of Udyotakara and Vritti of Visvanatha

(*b*) Simple unseen Sanskrit passages from any treatise or commentary on the Nyaya Philosophy for translation into English

*Paper VI.*—(*a*) Nyayamanjari of Jayanta Bhatta, Khandanakhandakhadya of Sriharsha, Chapter I

(*b*) Translation from English into Sanskrit

*Paper VII.*—(*a*) Bhasha Parichchheda with Siddhanta-muktavali; Kusumanjali of Udayanacharya, with commentary of Ruchidatta and gloss of Vardhamana.

(*b*) Translation from English into Sanskrit

*Paper VIII*—(*a*) Vaiseshika Sutras of Kanada, with Bhashya of Prasastapada, Nyayakandali of Sridhara, and Vritti of Jayanarayana, Saptapadarthi of Sivaditya, with commentary of Yatindra Madhava.

(*b*) Simple unseen Sanskrit passages from any treatise or commentary on the Vaiseshika Philosophy for translation into English.

### *G.—General Philosophy*

*Paper V.*—(*a*) Sankhya Sutras of Kapila with Vritti of Aniruddha; Sankhya Tattva Kaumudi; Yoga Sutras of Patanjali with the Bhashya of Vyasa and Vritti of Bhoja.

(*b*) Simple unseen Sanskrit passages from any work on Philosophy for translation into English.

*Paper VI.*—(*a*) Nyaya Sutras of Gautama with Bhashya of Vatsyayana and Vritti of Visvanatha; Vaiseshika Sutras of Kanada with Bhashya or Prasastapada; and Nyayakandali of Sridhara.

(*b*) Translation from English into Sanskrit.

*Paper VII.*—(*a*) Vedantasara (Jacob's edition); Bhagavadgita; Vedanta Sutra, with Sankara's commentary, Chapter I, Parts I and IV, Chapter II, Part II.

(*b*) Translation from English into Sanskrit.

*Paper VIII.*—(*a*) Nyayaratnamala of Parthasarathi Misra; Mimansa-Nyaya Prakasa of Apodeva. Upanishads—Isa, Kena, Katha, Prasna, Munda, Mandukya and Svetasvatara, with Sankara's commentary.

(*b*) Simple unseen Sanskrit passages from any work on Philosophy for translation into English

### *H.—Prakrit.*

*Paper V.*—(*a*) Prasna Vyakarana and Vipakasutra.

(*b*) Translation from English into Sanskrit (or Prakrit at the option of the candidate).

*Paper VI.*—(*a*) Prakrit portions of the following Dramas:—

Sakuntala, Vikramorvasi, Malavikagnimitra Uttaramacharita, Malatimadhava, Mahaviracharita, Mrichchhakatika, Mudrarakshasa, Ratnavali, Karpuramanjari, Venisanhara.

(*b*) Translation from Sanskrit into Prakrit.

*Paper VII.*—(*a*) Setubandha, Gaudavaha, Kumarapalacharita together with a general knowledge of Prakrita Pingala.

(*b*) Simple unseen passages in Prakrit for translation into English.

*Paper VIII.*—(*a*) Prakrit Grammar as in Vararuchi's Prakrita Prakasa (Cowell), Chanda's Prakrita Lakshana (Hœrnle), Hemachandra (Pischel).

Candidates are also expected to be familiar with the substance of Hœrnle's Grammar of the Gaudian languages.

(*b*) Simple unseen passages in Prakrit for translation into Sanskrit.

*I.—Epigraphy and History.*

*Paper V.*—(*a*) Rajatarangini and its continuation with Stein's introduction and commentary.

(*b*) Unseen passages in Sanskrit for translation into English.

*Paper VI.*—(*a*) Inscriptions of Asoka.

(*b*) Early Indian Alphabets.

*Paper VII.—Epigraphia Indica*

| | | |
|---|---|---|
| Volume | I. | Inscriptions Nos 1, 8, 11, 13, 36. |
| " | III. | Nos. 8 and 17. |
| " | IV. | No. 34. |
| " | V. | Nos. 2 and 19. |
| " | VI. | Nos 1 and 14. |
| " | VII. | No. 6. |
| " | IX. | No 31 (translation only). |
| " | X. | No. 15. |
| " | XII. | Nos. 8 and 18. |

Fleet—Corpus Inscriptionum Indicarum, Vol. III, Nos. 1-18, 33-37
Prachina Lekha Mala—Lekhas 69, 79, 80, 85, 92, 111 and 118.

*Paper VIII.*

(*a*) Ancient Geography of India.
The following books are recommended :—
Cunningham—Ancient Geography of India
Fleet—Topographical List of the Brihatsamhita
Pargiter—Translation of the Markandeya Purana (Bhuvanakosha only).
(*b*) Translation from English into Sanskrit.

## PALI.

### COMPULSORY PAPERS.

*Paper I.*

(*a*) Dīgha Nikāya (P. T. S.) :—

Brahmajāla-Suttanta
Sāmaññaphala-Suttanta.
Singālovāda-Sutta
Ambaṭṭha-Sutta.

(*b*) Majjhima-Nikāya (P.T.S.), Vol. I (Suttas 1-15).
(*c*) Saṃyutta-Nikāya (P.T.S.), Vol. I (pp 1-102)
(*d*) Anguttara-Nikāya—Pañcakanipāta (P. T. S ), pp. 1-110.

*Paper II.*

(*a*) Mahāvagga of the Vinaya Piṭaka, pp. 1-156.
(*b*) Bhikkhu Pātimokkha
(*c*) So-sor-thar-pa, by Mahamahopadhyay Dr. Satischandra Vidyabhushana.

*Paper III.*

Kaccāyana—Pali Grammar
Mahārupasiddhi.
Vuttodaya—Ed C. A. A. Silakkhanda (Nirnaya Sagara Press, Bombay)
Vararuci—Prākṛta Prakāsa.
R. G. Bhandarkar—Wilson Philological Lectures (Bombay).
Morris—Notes and Queries on Pali Words (J P.T.S.), 1885-87
Satischandra Vidyabhushana—Grimm's Law (Calcutta).
Gune—Comparative Philology (Poona).
Mazumdar—History of Bengali Language (Lectures X, XI, XII).

*Paper IV.*

*Rhys Davids—Buddhist India.
*Rhys Davids—American Lectures.
*Kern—Manual of Buddhism.
*Nariman—Literary History of Sanskrit Buddhism.

*Hœrnle—Manuscript Remains of Buddhist Literature found in Eastern Turkestan, Vol. I (Translation and notes only).
Mrs. Rhys Davids—Buddhism.
Spence Hardy—Manual of Buddhism.
Oldenberg—Buddha.
Beal—Buddhist Literature in China
Hackmann—Buddhism as a Religion.
Coomaraswamy—Buddha and the Gospel of Buddhism.

GROUP A—LITERATURE.

*Paper V.*

(a) Kulāvaka-jātaka (31).
Cullabodhi-jātaka (443).
Temiya-jātaka (538)
Mahāsutasoma-jātaka (537).
Dasaratha-jātaka (461).
Ghata-jātaka (454).
Devadhamma-jātaka (6).
} Fausböll.

(b) All the Jatakas referred to in the Bharhut sculptures so far as they have been identified (Rhys Davids' Buddhist India, p 209).
(c) Petavatthu (P.T.S.), pp. 1-43.
(d) Introduction to Rhys Davids' Buddhist Birth Stories.

*Paper VI.*

Therī-Gāthā with the Paramattha-dīpanī (Second half).
Thera-Gāthā (First half).
Suttanipāta—Ed. Fausböll (pp. 1-99)
Visuddhimagga (Calcutta Buddhist Text Society)
Puggalapaññatti (P. T. S )
Milindapañho (Meñdakapañha only, pp. 90-188).

*Paper VII.*

1 Inscriptions of Asoka (Senart and Buhler).
2. Piprahwa Buddhist Vase Inscription (as in Luders' List of Brahmi Inscriptions), No. 931.
3 Bharhut Stupa Inscriptions (as in Luders' List, Nos. 678-903).
4 Sanchi Stupa Inscriptions (as in Luders' List, Nos. 161-668).

GROUP B.—PHILOSOPHY.

*Paper V.*

Dhammasangani (P. T. S.)
Tikapaṭṭhāna.
Kathāvatthu (P. T. S.), Vol. I. pp. 1-103.

*Paper VI.*

Abhidhammattha Saṅgaha.
Netti-Pakarana.
Abhidammâvatāra.

*Paper VII.*

Aṭṭhasālini (P. T. S.), pp 1-136.
Vibhanga (P. T. S.), pp. 1-150
Dhātukathā (P. T. S.), pp. 1-100.

GROUP C.—EPIGRAPHY AND HISTORY.

*Paper V.*

Mahāvamsa, Chs. 21-37 (Geiger's edition).
Sāsanavansa (P. T. S.).
Dāṭhavamsa (P. T. S.).

*Paper VI.*

Inscriptions of Asoka.
Hathigumpha Inscription of Kharavela.

*Paper VII.*

(*a*) Inscriptions of the Kshaharata and Satavahana Dynasties
(*b*) Inscriptions of the Imperial Guptas.

*Paper VIII*

Cunningham—Ancient Geography of India
Reports of the Archæological Survey of India about Taxila and Isipatana Vesali, Savatthi, Rajagriha, Kusinara, and Kapilavastu
Yuan Chwang (Watters), 2 vols.
Foucher—Notes on the Geography of Gandhara.

GROUP D.—MAHAYANA LITERATURE AND PHILOSOPHY.

*Paper V.*

Lalita Vistara.
Asvaghosha's Buddhacarita

*Paper VI.*

Mādhyamika Sutra with Vritti of Candrakirti
Lankâvatāra Sutra (Calcutta Buddhist Text Society).
Sutralankāra of Asanga (edited by Sylvain Lévi)

*Paper VII*

Nyāyabindu Tikā of Dharmottara (A. S. B.).
Sarvadarsana-sangraha (portion dealing with Buddhist Philosophy only)
Mediæval School of Indian Logic (Buddhist Logic only), by Mahamahopadhyaya Dr. Satischandra Vidyabhushana.

*Paper VIII*

Thibaut—Sanskrit Grammar
Macdonell—Sanskrit Grammar

ARABIC

Kitabu'l Aghani, Vol IV—

(*a*) from middle of page 17 to middle of page 34,
(*b*) from page 74 to page 98.

Yatimatu'd-Dahr, Vol. IV- Al-Babu'l-Khamis fi dhikr-i-Abi'l-Fadhi'l-Hamadani, pages 167-204
Qur'an with the Kashshaf by Zamakhshari—the whole of Suratu l-'Imran.
Mishkatu'l-Masabih-

(*a*) Kitabu'l-Imarat-i-Wa'l-Qada'i.
(*b*) Kitabu'l-Adab.

Isharat by Avicenna. Al-Namaṭu'ṭ-Tasi and Al-Namaṭu'l-Ashir.
Futuhū'l-Buldan by Baladhiri, pages 152-240.
Mufassal by Zamakhshari—from the beginning of the book up to the end of the Bathh Ism-i Mu'rab.
Fara'id by Mulla Mahmūd Jawnpuri. 'Ilmu'l-Ma'ānī—from the beginning of the Muqaddima up to the end of the Naw-i-Awwal of the Fann-i-thani.
Students are recommended to consult the following books.—

| | | |
|---|---|---|
| De Sacy | ... | Grammaire Arabe. |
| Do. | ... | Anthologie Grammaticale Arabe. |
| Wright | ... | Grammar of the Arabic Language. |
| Howell | .. | Grammar of the Classical Arabic Language. |
| Wright | ... | Lectures on the Comparative Grammar of the Semitic Languages. |
| Noldeke | ... | Semitic Languages (Encyclopædia Britannica, XXIV, 617). |
| Mehren | ... | Rhetorikder Araber. |
| Cheikho and Edde | ... | 'Ilm-al-Adab |
| St. Guyard | ... | Theorie nouvelle de la Metrique Arabe (Jour. Asiat., 1876). |
| Hartmann | ... | Metrum und Rhythmus. |

| | | |
|---|---|---|
| De Geoje and Thatcher | ... | Arabic Literature (Encyclopædia Britannica, II, 271). |
| Wallace and Thatcher | ... | Arabic Philosophy (Enc. Brit., II, 276). |
| De Boer | ... | History of Philosophy in Islam—tr. Jones. |
| Huart | ... | History of Arabic Literature. |
| Arbuthnot | ... | Arabic Authors. |
| Nicholson | ... | Literary History of the Arabs. |
| Browne | ... | Literary History of Persia, Vol. I. |
| Cambridge Mediaeval History, Vol II, Chapters 10-12. | | |
| Gibbon | ... | Decline and Fall of the Roman Empire, Chapters. 50-52, 56-59, 64, 65, 67, 68. |
| Ameer Ali | ... | History of the Saracens. |
| De Goeje | ... | Caliphate (Enc. Brit., V. 23) |
| Hitti | ... | Origins of the Islamic State (Columbia University). |
| Weil | ... | History of Islamic Peoples—tr Khuda Bukhsh |
| Goldziher | ... | Mohammad and Islam—tr. Seelye (Yale University Press) |
| Von Kremer | .. | History of Islamic Civilization—tr. Khuda Bukhsh. |
| Macdonald | ... | Development of Muslim Theology, Jurisprudence and Constitutional Theory |
| Ibn Khaldun | ... | Prolegomena—tr. Slane. |
| Hurgrounje | ... | Mohammedanism. |
| Ameer Ali | ... | Spirit of Islam. |
| Elphinstone | ... | History of India (Mahomedan Period) |

## PERSIAN.

### *Poetry.*

The Hadiqa of Sanai (Nawal Kishor edition, 1887), Chapters I and V
Qasaid-i-'Urfi.
The Diwan of Nasir-i-Khusraw-i-Alawi (Bombay edition)
The Qasaid of Zahir Faryabi—All the Persian Qasidas (Nawal Kishor or any other edition).

### *Prose.*

The Tazkira of Dawlat Shah.
The Tazkira of 'Awfi, Part II (London edition).
The Kimiya-i-Sa'adat of Ghazali (pages 1-50)
Gawhar-i-Murad.
The Hada'iqu-l-Balaghat—the first two Hadiqas.
Arabic Prose—Nafhatu-l-Yaman.
Students are recommended to consult the following books.—

| | | |
|---|---|---|
| Ethe | ... | Persian Language and Literature (Enc. Britt. XXI, 246). |
| Ouseley | ... | Biographical Notices of Persian Poets. |
| Arbuthnot | ... | Persian Portraits. |
| Browne | ... | Literary History of Persia. |
| De Boer | ... | History of Philosophy in Islam—tr. Jones. |
| Platts and Rankin | ... | Grammar of the Persian Language. |
| Ibrahim | ... | Persian Grammar. |
| Forbes | ... | Ditto. |
| Phillot | ... | Higher Persian Grammar |
| Geiger und Kuhn | ... | Grundriss der Iranischen Philologie. |
| Darmesteter | ... | Etudes Iraniennes. |
| Ditto | ... | Origines de la Poesie persane. |
| Gladwin | ... | Rhetoric, Prosody and Rhyme of the Persians. |
| Blochmann | ... | Prosody of the Persians |
| Ruckert | ... | Grammatik, Poetik und Rhetorik der Perser. |
| Azad | ... | Sukhandan-i-Fars. |
| Cambridge Mediæval History, Vol II, Chapters 10-12. | | |
| Gibbon | ... | Decline and Fall of the Roman Empire, Chapters 50-52, 56-59, 64, 65, 67, 68. |
| De Goeje | ... | Caliphate (Enc. Britt., V, 23). |
| Hitti | ... | Origins of the Islamic State (Colum. Univ. Press). |
| Goldziher | ... | Mohammad and Islam—tr. Seelye (Yale University Press). |
| Von Kremer | ... | History of Islamic Civilization—tr. Khuda Bukhsh. |
| Weil | ... | History of Islamic Peoples—tr. Khoda Bukhsh. |

| | | |
|---|---|---|
| Macdonald | ... | Development of Muslim Theology, Jurisprudence and Constitutional Theory. |
| Ibn Khaldun | ... | Prolegomena—tr. Slane. |
| Hurgronnje | ... | Mohammedanism. |
| Ameer Ali | ... | Spirit of Islam. |
| Ditto | ... | History of the Saracens. |
| Elphinstone | ... | History of India (Mahomedan Period). |

## INDIAN VERNACULARS.

### BENGALI.

(Principal Subject.)

*Paper I.*

History of Bengali Literature from the earliest times down to 1850
Special Period.—Vaishnava Literature during the Sixteenth Century.
Books recommended—

| | | |
|---|---|---|
| D. C. Sen | ... | History of Bengali Language and Literature (Calcutta University). |
| Ditto | ... | Vaishnava Literature of Mediaeval Bengal (Calcutta University). |
| Ditto | ... | Chaitanya and his Companions (Calcutta University). |
| Ditto | ... | Folk Literature of Bengal (Calcutta University). |
| Ditto | ... | The Bengali Ramayanas (Calcutta University) |
| S. K. De | ... | History of Bengali Literature, 1800-1825 (Calcutta University). |
| Sasankamohan Sen | ... | Vangavāṇī |

*Paper II.*

(1) Vanga Sāhitya Parichaya, edited by D. C. Sen (Calcutta University), Vol. I, pp. 379-402 (Dharmamangala); pp. 486-524 (Ramayana), pp. 607-638 (Mahabharata).
(2) Gopichandrer Gān, pp 1-56 (published by the Calcutta University).
(3) Srikrishna Kīrtan, pp. 332-398 . Radha-Viraha (Sahitya Parishad).

*Paper III.*

| | | |
|---|---|---|
| Mukundarāma Kavikankana | ... | Chandimangala. |
| Michael Madhusudan Datta | ... | Meghanādabadha. |
| Dinabandhu Mitra | ... | Niladarpana. |
| Girishchandra Ghosh | ... | Aśoka. |

*Paper IV.*

(*a*) Development of Prose Style in Bengali Literature, 1800-57.
(Candidates are recommended to refer to D. C. Sen's Bengali Prose Style)
(*b*) Influence of Western Culture on Bengali Literature, 1870—1900, with special reference to the works of Bankimchandra and Rabindranath.

In papers II and III, 75 marks shall be allotted to the texts and 25 marks to the unseen passages.

Questions on the texts shall include—

(*a*) Questions on the subject matter and on the language of the prescribed books (historical, geographical, critical questions and literary allusions are not excluded).
(*b*) Questions on grammar and prosody arising from the texts
(*c*) Questions on the life and literary career of the authors whose works are prescribed.

*Paper VIII.—Comparative Philology.*

| | | |
|---|---|---|
| B. C. Mazumdar | ... | History of the Bengali Language (omitting the first four chapters). |
| S. K. Chatterji | ... | A Brief Sketch of Bengali Phonetics (International Phonetic Association, University College, London). |

## HINDI.

(Principal Subject.)

*Paper I.—History of Literature.*

History of Hindi Literature from the earliest times, *i.e.*, from Chanda Bardai (12th Century) down to Babu Harischandra.

Special subject—Religious Literature of Hindi Vaishnava poets in the 15th and 16th centuries.

Books recommended—

A Short History of Hindi Literature (Hindi Sahitya ka Sankshipta Itihas) by the Misra Brothers.

The Origin of Hindi Language and Literature, by Pandit Mahavir Prasad Dwivedi.

Hindi Bhasha, by Pandit Bal Mukund Gupta.

Vernacular Literature of Hindustan, by Sir George Abraham Grierson.

Hindi Literature (Heritage of India Series).

| | |
|---|---|
| Grierson ... ... .. ... ... | Tulsidas. |
| Wescott ... ... ... ... ... | Kabir. |

*Part II.—Old Texts.*

| | |
|---|---|
| Chanda Bardai ... | Prithwiraj Rayasa (Select portions in the Kavita Kaumudi of Ram Nares Tripathi). |
| Sur Das ... | Sur Sagar, Canto X; Vinaya Patrika. |
| Tulsi Das ... | Ram Charit Manas—Selection by Syam Sundar Das (Indian Press), Vinay Patrika. |
| Jayasi ... | Padumawat, Part I. |
| Kesavdas ... | Ram Chandrika. |
| Rathor Prithi Raja ... | Veli Krishna Rukmani—Ed. Tessitori—Part I (Asiatic Society of Bengal). |

*Paper III.—Mediæval and Modern Texts.*

| | |
|---|---|
| Bhushan Granthawali ... | Sammelan edition (Select portions). |
| Biharilal ... | Satsai. |
| Pandit Ambikadatt Vyas ... | Sukavi Satsai. |
| Harischandra ... | Chandravali. |

*Paper IV.—Essay Paper.*

(*a*) Development of Hindi Literature, 1850-1900.
(*b*) Persian Influence on Hindi Literature.

*Paper VIII.*

| | |
|---|---|
| Kellogg ... | Grammar of the Hindi Language |
| Greaves ... | Grammar of Tulsidas. |
| (Nagri Pracharini Sabha) ... | Hindi Grammar |

## MAITHILI.

(Principal subject.)

*Paper I.*

History of Maithili Literature from the earliest times (the thirteenth century) down to Chanda Jha

Special subject —Age of Vidyapati.

*Paper II*

| | |
|---|---|
| Jyotirishwar Thakur ... | Varnaratnakar. |
| Vidyapati ... | Kirti Lata. |
| Govind Das ... | Padyasangraha. |
| Ramadas Jha ... | Anand Vijay. |
| Devanand ... | Ushaharana. |
| Umapati ... | Parijataharana. |

*Paper III.*

| | | |
|---|---|---|
| Harshanath | ... | Madhavananda. |
| Jiwan Jha | ... | Sundar Sanyog. |
| Lal Dass | ... | Ganes Khand. |
| Harshanath | ... | Padyavali. |

*Paper IV.*

Influence of Persian on Maithili.
Development of Maithili Literature, 1850-1900.

*Paper VIII.*

| | | |
|---|---|---|
| Bhava Nath Misra | ... | Mithila Shabda Prakash. |

ORIYA.

(Principal subject.)

*Paper I.*

General History of Oriya Literature from the earliest times to 1803 A.D.
Special period—from 1430 to 1568.

The following books and articles are recommended :—

(1) Syamasundara Rajaguru's Prabandhavali.
(2) Tarinicharana Rath's Utkala Sahitya Itihasa.
(3) M. M. Chakravarti's Essay in J. A. S. B. for 1898—No 4.
(4) Mrityunjaya Rath's Essays on the subject published in the Utkala Sahitya and Mukura.
(5) Gopinatha Nanda's criticism of Sarala Mahabharata published in the Utkala, Sahitya, and of Jagannatha Dasa's Bhagavata published in the Satyavadi.

*Paper II.*

The following portions from the Oriya Sahitya Parichaya, Vol. I (published by the Calcutta University) :—

(1) Kesava Koili, Kanta Koili, Gopi Bhasha, and Kamala Locbana Chautisa.
(2) Balarama Dasa's Ramayana, excepting selections Adi—2 and Ayodhya—4 and 6.
(3) Jagannatha Dasa's Bhagavata, selections 1 to 7, 14, 20, 21.
(4) All the selected portions of Sarala Dasa's Mahabharata.

*Paper III.*

A Mediæval—

(1) Rasakallola by Dinakrishna Dasa, as published in the Utkala Sahitya Parichaya.
(2) Kisori Chandranana Champu, by Baladeva Kavisurya.

B. Modern—

(1) Radhanatha Ray's Mahayatra.
(2) Madhusudana Rao's Vasanta Gatha.
(3) Fakirmohan Senapati's Lachhima.

*Paper IV.*

(1) Influence of Upendra Bhanja on the post Upendra Bhanjic Literature of Orissa.
(2) Growth of Modern Oriya Literature under influence of Western culture.

*Paper VIII.*

The following books are recommended :—

(1) Such portions from Beames' Comparative Grammar of Seven Aryan Languages as relate to Oriya in comparison with Bengali and Hindi.
(2) B. C. Majumdar's Lectures on the History of Bengali Language - Lectures X, XI, XII and XIV.
(3) Oriya Bhasha Tattwa, by Pandit Gopinatha Nanda, published as articles in the Utkala Sahitya, the Mukura and the Satyavadi.
(4) Articles from Syamasundara Rajaguru's Prabandhavali on Oriya Sarvanama, Avyaya and Vibhakti.

## GUJARATI.

(Principal subject.)

*Paper I.*

History of Gujarati Literature from the earliest times to A. D. 1900.
Special subject—Parsi Writers of Gujarati during the 19th Century.

Books recommended :—

| | | |
|---|---|---|
| K. M. Jhaveri | ... | Milestones in Gujarati Literature. |
| D. C. Derasari | ... | Sathina Sahityanu Digdarsan. |
| K. M. Jhaveri | ... | "Parsi Gujarati Sahitya" in the Vismi Sadi. |
| A. B. Dhruva and I. J. S. Taraporewala | ... | Selections from Gujarati Literature (Calcutta University), the introductory essay to each writer. |

*Paper II.*

Old Gujarati and Rajasthani —

| | | |
|---|---|---|
| Padmanabh | ... | Kanhad-de Prabandh (Derasari's edition). |
| Bhalan | ... | Kadambari (Kantamala's edition). |
| Rathor Prithvi Raj | ... | Veli Krishna Rukmani (Tessitori's edition, Asiatic Society of Bengal). |

Old Gujarati collection published by the Baroda Government.

*Paper III.*

Mediæval and Modern Texts .—

| | | |
|---|---|---|
| Premanand | ... | As given in Selections from Gujarati (Calcutta University). |
| Dayaram | ... | |
| Narmadashankar | ... | Narma Kavita. |
| Dalpatram | ... | Forbes Viraha and Dalpat Kavya. |
| Kalapi | ... | Kekarava. |
| Govardhanram Tripathi | ... | Sarasvatichandra. |

*Paper IV.*

Special subjects .—

(*a*) Women writers in Gujarati.
(*b*) Akho and Samal.

*Papers V, VI and VII.*

As with the other Vernaculars.

*Paper VIII.*

*Philosophy.*

| | | |
|---|---|---|
| N. B. Divatia | ... | History of the Gujarati Language. |
| Sir G. A. Grierson | ... | Linguistic Survey of India, Vol. IX (Introduction to Gujarati and Rajasthani). |

## Subsidiary Languages.

*Papers V and VI on any one of the following :—*

### (i) BENGALI.

TEXTS.

| | | |
|---|---|---|
| Pramathanath Sen | ... | Sarala Sahitya Sangraha and Adarsa Sahitya Sangraha. |
| Akshaykumar Dattagupta | ... | Sandarbha Chandrika. |

GRAMMAR.

| | | |
|---|---|---|
| G. F. Nicholl | ... | Manual of Bengali Language. |
| J. D. Anderson | ... | Ditto. |

### HISTORY OF LITERATURE.

Students are recommended to consult Dineschandra Sen's History of Bengali Language and Literature and Introduction to Typical Selections.

## (ii) ASSAMESE.

### TEXTS

| | | |
|---|---|---|
| Sankaradeva | ... | Rukmini Haran. |
| Bhattadeva | ... | Katha Gita (first three chapters). |
| Lakshminath Bezbarua | ... | Kripabar Barbarurar Kakatar Topala. |
| Mafizuddin Ahmad | ... | Jnana Malini. |
| Rajanikanta Bardolai | ... | Manomati. |

### GRAMMAR.

| | | |
|---|---|---|
| Hemchandra Barua | ... | Asamiya Byakaran. |
| Devananda Bharali | ... | Asamiya Bhashar Maulik Bichar. |
| Satyanath Bora | ... | Sahitya Bichar |
| Devananda Bharali | ... | Anglo-Assamese Grammar. |
| G. F. Nicholl | ... | Assamese Grammar (in Bengali Manual) |

### LITERARY HISTORY.

| | | |
|---|---|---|
| Devendranath Bezbarua | ... | Asamiya Bhasha Aru Sahityar Buranji |

## (iii) ORIYA.

### TEXTS.

| | | |
|---|---|---|
| Jagannatha Dasa | ... | Bhagavata (Selections as in Typical Selections from Oriya, Vol I). |
| Madhusudana Rao | ... | Prabandhamala. |
| Ditto | ... | Kusumanjali |

### GRAMMAR.

| | | |
|---|---|---|
| Radhanatha Ray | ... | Vyakarana Pravesa |
| E. C. B. Hallam | ... | Oriya Grammar |

### LITERARY HISTORY.

| | | |
|---|---|---|
| Manomohan Chakrabarti | ... | Articles on Oriya Literature (in the J. A. S. B., 1898-99). |

## (iv) MARATHI

### TEXTS.

Gadyaratna Samuchchay, Part I.
Navanit, pages 2-20, 47-48, 159-71, 381-410.

### GRAMMAR.

| | | |
|---|---|---|
| Ramchandra Bhikaji Joshi | ... | Praudhabodh Vyakaran. |
| G. R. Navalker | ... | Marathi Grammar |

### LITERARY HISTORY.

| | | |
|---|---|---|
| Bhave | ... | Maharashtra Saraswat. |
| M. K. Nadkarni | ... | A Short History of Marathi Literature. |

## (v) HINDI.

### TEXTS.

| | | |
|---|---|---|
| Tulsidas | ... | Ramayana, Selection by Syamsundar Das. |
| Ramnares Tripathi | ... | Kavita Kaumudi, Part I (Select portions). |

GRAMMAR.

| | | |
|---|---|---|
| Kellogg | ... | Grammar of the Hindi Language. |
| Pincott | ... | Hindi Manual. |
| Etherington | ... | Bhasha Bhaskar. |
| Garcin de Tassy | ... | Chrestomathie Hindie on Hindouie |

LITERARY HISTORY.

| | | |
|---|---|---|
| Grierson | ... | Vernacular Literature of Hindustan. |
| Keay | ... | Hindi Literature. |

(vi) GUJARATI.

TEXTS.

| | | |
|---|---|---|
| Ghanashyam | ... | Prithivi Ballabh (Gujarati Press, Bombay). |
| I P. Khansaheb and Narbarilal Trikamlal | ... | Sahitya Ratna. |

GRAMMAR.

| | | |
|---|---|---|
| Taylor | ... | Gujarati Bhashanu Vyakaran. |
| K. P. Trivedi | ... | Madhya Vyakaran. |
| St. Clair Tisdall | ... | Simplified Grammar of the Gujarati Language. |
| Khansaheb and Sehth | ... | Hints on the Study of Gujarati. |

LITERARY HISTORY

| | | |
|---|---|---|
| K. M. Jhaveri | ... | Milestones in Gujarati Literature. |

(vii) URDU.

TEXTS.

Kalam-i-Urdu (Board of Examiners).
Hayat-i-Saadi (Hali).
Taubatu-n-Nasuh (Nazir Ahmad)
Nazm-i-Muntakhab. Musaddas-i-Hali.

GRAMMAR.

| | | |
|---|---|---|
| Palmer | ... | Simplified Grammar of Hindustani, Persian and Arabic. |
| Green | ... | A Practical Hindustani Grammar. |
| Forbes | ... | Hindustani Grammar. |
| Platts | ... | Ditto. |

LITERARY HISTORY.

| | | |
|---|---|---|
| Garcin de Tassy | ... | Histoire de la Litterature Hindouie et Hindoustanie. |
| Azad | ... | Ab-i-Hayat. |

(viii) TAMIL.

TEXTS.

| | | |
|---|---|---|
| Wickremasinghe | ... | Tamil Grammar Self-taught. |
| Pope | ... | Tamil Handbook. |
| Do. | ... | Catechisms of Tamil Grammar, I-II. |
| Arden | ... | Progressive Grammar. |
| Purnalingam Pillai | ... | Primer of Tamil Literature. |
| Ditto | ... | Viveka Vilakkam. |
| Ditto | ... | Sivagnana Kovai. |
| Ditto | ... | Vasaka Thirattu. |

Article on Dravidian Languages (Encyclopædia Britannica).
Matriculation Selections (Madras University).

## (ix) TELUGU.

### TEXTS.

| | | |
|---|---|---|
| Brown | ... | Telugu Grammar. |
| Morris | ... | Simplified Telugu Grammar. |
| Arden | ... | Telugu Grammar, 1895; Telugu Companion Reader, 1879. |
| Narasingham and Narasingharow | ... | Ananda Readers, Parts III and IV. |

Article on Dravidian Languages (Encyclopædia Britannica).
Matriculation Selections (Madras University).

## (x) MALAYALAM.

### TEXTS.

| | | |
|---|---|---|
| Gundert | ... | Catechism of Malayalam Grammar (Madras, 1881). |
| Fohrmeyer | ... | Progressive Grammar of Malayalam (Mangalore, 1889). |
| Peet | ... | Malayalam Grammar (Cottayam, 1841). |
| Fourth Reader | ... | Basel Mission (Mangalore). |
| Twelfth Reader | ... | |
| Gadya Malika, Part II | ... | |
| History of Malayalam Literature | ... | |

Article on Dravidian Languages (Encyclopædia Britannica)
Matriculation Selections (Madras University)

## (xi) KANARESE

### TEXTS.

| | | |
|---|---|---|
| Kittel | ... | Grammar of Old and Modern Kannada (Mangalore, 1903). |
| Spencer | ... | Kanarese Grammar (Mysore, 1914) |
| Rice | ... | History of Kanarese Literature |

Padya Sara, Part I, pp. 1-39.
Katha Sangraha, Part I, pp. 1-96.
Ditto, Part II, pp 210-80
Nirmale (or She Stoops to Conquer in Kanarese)
Sabdadarsa (Kanarese).
Article on Dravidian Languages (Encyclopædia Britannica)
Matriculation Selections (Madras University).

## (xii) SINHALESE.

### TEXTS.

| | | |
|---|---|---|
| Wickremasinghe | ... | Sinhalese Grammar (London, 1916). |
| Gunasekara | ... | Comprehensive Sinhalese Grammar (Colombo, 1891). |
| Ditto | ... | Kusajatakakavya, 150 verses. |
| Gunawardhana | ... | Subhasitaya, 50 verses. |
| Samarasekara | ... | Sinhalese Translation of Dighanikaya, Vol. I (Brahmajalasutra and Ambattha sutra only). |
| Gurulu Goro | .. | Amawatura (chapters 2, 3 and 4 only) cited by Jayatriaka. |

## (xiii) MAITHILI.

### TEXTS.

| | | |
|---|---|---|
| Grierson | ... | Grammar and Chrestomathy, 2 vols. |
| Vidyapati | ... | Padavali (Vangiya Sahitya Parishad; Indian Press, Allahabad; Coomaraswamy and Arun Sen) |
| Umapati | ... | Parijata Harana, edited by Grierson (Bihar and Orissa Research Society, Vol. III, 1917). |
| Grierson | ... | Vernacular Literature of Hindustan. |

## Basic Languages.

### *Paper VII.*

Any two of the following :—

### (i) PALI.

| | | |
|---|---|---|
| Frankfurter | ... | Pali Handbook. |
| Müller | ... | Simplified Pali Grammar. |
| Victor Henry | ... | Precis de Grammaire Palie. |
| Vidhusekhar Sastri | ... | Pali Prakasa. |
| Andersen | ... | Pali Reader—Select portions, viz.— |

Suṁsumāra Jātaka, pp. 1-2.
Sīhacamma-J., pp. 8-9.
Bāveru-J , pp. 18-19.
Sīlānisamsa-J., pp. 28-29.
Mahosadha's Judgment, pp. 58-59.
Cattāri Pubbanimittani, pp. 63-64.
No Continuous Personal Identity, p. 99.
Rebirth is not Transmigration, pp. 100-101.
Padhāna-Sutta, pp. 103-104
Dhamiya-Sutta, pp 104-105.
Selections from the Dhammapada, pp. 106-107.

### (ii) PRAKRIT.

| | | |
|---|---|---|
| Vararuchi | ... | Prakrita Prakasa. |
| Rahjasekhara | ... | Karpuramanjari. |
| Woolner | ... | Introduction to Prakrit |

### (iii) PERSIAN.

| | | |
|---|---|---|
| Rankin | ... | Persian Primer. |
| | | New Persian Selections (Board of Examiners). |
| M Kazim Shirazi | ... | Sahl Amuz-i-Farsi, Part II |
| | | Sahl Ama-i Farsi. |
| Platts and Rankin | ... | Persian Grammar. |
| Rosen | ... | Ditto. |
| Kanga | ... | Hints on the Study of Persian. |
| St. Clair Tisdall | ... | Persian Conversational Grammar, pp. 1-100. |

## COMPARATIVE PHILOLOGY.

### *Paper I.*

| | | |
|---|---|---|
| Jackson, A. V. W. | ... | Philology. (A pamphlet by the Columbia University Press.) |
| Gune, P. D. | ... | Introduction to Comparative Philology (Oriental Book Supplying Agency, Poona), pp. 1-159. |
| Jespersen | ... | Language (Allen). |
| Tucker, T. G. | ... | Introduction to the Natural History of Language (Blackie, Chapters 1, 4 to 10 and 16). |
| Oertel, H. | ... | Lectures on the Study of Language (Yale University), Lectures 1 to 3 and 5. |
| Strong, H. A., Logeman, W. S., and Wheeler, B. I. | | Introduction to the Study of the History of Language (Longmans), Chapters 1, 2, 4, 5 and 9 to 15. |
| Belvalker, S. K. | ... | Systems of Sanskrit Grammar (Oriental Book Supplying Agency, Poona). |
| Greenough and Kittredge | ... | Words and their ways in English Speech (Macmillan). |
| Wyld | ... | Historical Study of the Mother Tongue, Chapters 1-10. |

### *Paper II.*

| | | |
|---|---|---|
| Tucker | ... | Chapters 2, 3 and 12 to 16. |
| Oertel | ... | Lecture 4. |

| | | |
|---|---|---|
| Strong, Logeman and Wheeler | | Chapters 3 and 11. |
| Dumville, B. | ... | The Science of Speech (London University Tutorial Press). |
| Uhlenbeck, C. C. | ... | Manual of Sanskrit Phonetics (Luzac). |
| Macdonnell, A. A. | ... | A Vedic Grammar for Students (Oxford), paragraphs 1-69. |
| Whitney, W. D. | ... | Sanskrit Grammar (Trubner), paragraphs 1-260, and 591-98 (3rd edition to be used). |
| Jackson, A. V. W. | ... | Avesta Grammar (W. Kohlhammer, Stuttgart), paragraphs 1-218. |
| Wright, J | ... | A Comparative Grammar of the Greek Language (Oxford), paragraphs 28-232. (The portions not dealing with Sanskrit may be omitted.) |
| Coldd, E. | ... | Story of the Alphabet (Geo Newnes). |
| Majumdar, Surendranath | ... | Syllabus of a Course of Lectures on Indian Palæography (Cal Univ.) |
| Bhandarkar, D R | ... | Antiquity and Origin of the old Indian Alphabet in Carmichael Lectures, Series II (Cal Univ ) |
| R D Banerjee | ... | Bengali Alphabet (Calcutta University). |

*Paper III*

| | | |
|---|---|---|
| Strong, Logemann and Wheeler | | Chapters 19 and 20. |
| Macdonell | ... | Paragraphs 70-183. |
| Whitney | ... | Paragraphs 261-1245 except those referring to Syntax as prescribed for Paper VI |
| Jackson | ... | Paragraphs 219-900 |
| Wright | ... | Paragraphs 239-575 (the portions not dealing with Sanskrit may be omitted). |

*Paper IV.*

| | | |
|---|---|---|
| Tucker | ... | Chapter 17 |
| Strong, Logemann and Wheeler | ... | Chapters 22 and 23. |
| Macdonell | ... | As for Paper III. |
| Whitney | ... | Ditto. |
| Gune | ... | Pages 160-222. |
| Chattopadhyaya, B. K | ... | Prakrita Prakasa (S K. Lahiri, Calcutta) |
| Imperial Gazetteer of India | ... | Vol II, Chapter VI. |
| Rhys Davids, T. W | ... | Buddhist India (T. Fisher Unwin), Chapters VII-X |
| Woolner | ... | Introduction to Prakrit. |

*Paper V.*

| | | |
|---|---|---|
| S. K Chatterjee | ... | A Brief Sketch of Bengali Phonetics (International Phonetic Association, University College, London). |
| Gune | ... | Pages 223-52. |
| Majumdar, B C. | ... | History of Bengali Language (Calcutta University). |
| Grierson, A G. | ... | The Languages of India, being a reprint of the Chapter on Languages from the Report on the Census of India, 1901. (Government Printing Press, Calcutta.) |

*N B* —From this book paragraphs 1-21, 71-79 and 84-86 would be useful also for Paper I

| | | |
|---|---|---|
| Imperial Gazetteer of India | ... | Vol. II, Chapter XI. |
| Encyclopædia Britannica | ... | Articles on Behari, Bengali, Gujarati, Hindi (Eastern), Hindi (Western), Hindustani, Marathi, Oriya, Pahari, Rajastani, Sindhi and Urdu. |

*N B* —Books Nos 2-5 are meant specially for those candidates whose mother-tongue is Bengali For those who require other languages of India, other books will be prescribed in their stead as need arises For students whose mother tongue is Hindi the following books are recommended —

| | | |
|---|---|---|
| Kellog | ... | Grammar of Hindi (Trubner). |
| Greaves, Rev. E. | ... | Grammar of Tulsidas's Ramayana (Benares). |
| Grierson, Sir G. A. | ... | Seven Grammars of the Behari Languages (specially the Introduction). |

Candidates are expected to illustrate old Hindi mainly from Tulsidas's *Ramayana*, the poems of Surdas and Malik Md. Jaysi's *Padmavat*.

*Paper VI.*

| | | |
|---|---|---|
| Strong, Logemann and Wheeler... | | Chapters 6-8 and 16-18. |
| Morris, E. P. | ... | On Principles and Methods in Syntax (Yale University). |
| Apte, V S | ... | A Guide to Sanskrit Composition (Mrs. Radhabai A. Sagoon, Bombay). |
| Macdonell | ... | Paragraphs 184-218. |
| Whitney | ... | Paragraphs 264-305, 486, 506, 507, 512, 572-82, 591-98, 776-79, 821-23, 926-30, 948-50, 960, 967, 980-88, 994, 995, 999, 1040, 1072-95, 1126-30, 1240-1316. |
| Majumdar | ... | As for paper V. |

For Hindi students as in paper V.

(Books for other languages of India will also be prescribed instead of the last two as need arises.)

*Paper VII.*

| | | |
|---|---|---|
| Tucker | ... | Chapter II. |
| Haug, M. | ... | Essays on the Religion of the Parsis (Trübner) |
| Jackson | ... | Introduction to Avesta Grammar |
| Hastings' Encyclopædia of Religion and Ethics | | Articles on *Aryan Religion* and *Avesta.* |
| Macdonnell, A. A. | ... | Vedic Mythology (Trübner). |
| M. N. Dhalla | ... | Zoroastrian Theology. |
| Tolman, H. C. | ... | Ancient Persian Lexicon and Texts (American Book Co.) |

Selections from Avesta and Old Persian. (*First series*)

Yas IX, LVII, XXVI, LX, XII.
Ven. VIII. 20-21 (*Kem-na-Mazda*)
The Three Prayers (*Yatha, Ashem Yenghe Latam*)
Yas. XIX-XXI, LIV
Ven II 22-35, IV. 1-16, 44-45, 47-49, X. 16-20
Gah IV
Niyaish I-II.
Yt I. 7-19.
Gathas XXVIII-XXXII, LIII.

Old Persian Inscriptions —

Ins of Cyrus at Murghab.
Ins of Darius at Naksh-i-Rustem.
" " " Suez.
" " " Behistun, Col. I.

Selections from Avesta and Old Persian. (*Second series.*)

Yas. X, I, 16.
Yt IX, XXIII.
Sirona II.
Westergaard's Fragment II (*Vispa Humata*)
Niyaish, V
Afrin, I. 8-12.
Yt. XIII. 80-110, 139-115.
Vis. XV.
Ven, III. 23-33 ; VI, 44-51 ; VII. 4-10, 14-22, XVIII 1-13, 14-28, XXI.
Gathas, XXXIII-XXXIV, XLIII-XLIV, LI.

Old Persian Inscriptions .—

Ins. of Darius at Behistun, Cols. II-III.

*N B*—The two series of Avesta and old Persian Texts are to be taken *alternately* year by year Thus *for odd* years the *First series* is to be taken and for *even* years the *Second series*

*Paper VII (Alternative).*

| | | |
|---|---|---|
| Caldwell, R. | ... | Comparative Grammar of the Dravidian Languages. 3rd edition (Kegan Paul). Introduction. |
| Hoffmann, J. | ... | Mundari Grammar (Government Press, Calcutta). Introduction. |
| Encyclopædia Britannica | ... | Articles on *Brahui, Dravidian Languages, Kanarese, Malayalam, Mundas, Tamil, Telugu, Tibeto-Burman.* |

| | | |
|---|---|---|
| Aiyangar, M. Srinivasa | ... | Tamil Studies, 1st series (Guardian Press, Madras), Chapters 1-3, 6-8 and 12. |
| Kittel | ... | Kannada Dictionary (Basel Mission Press, Mangalore). Introduction. |
| Konow, S. | ... | Article on *Dravidian Philology* in Indian Antiquary, 1903. |

The following books may be consulted with advantage for the various papers —

*Paper I.*

| | | |
|---|---|---|
| Encyclopædia Britannica, 11th edition | ... | Articles on *Grammar*, *Philology Significs.* |
| Stout, G. F. | ... | Manual of Psychology, 3rd edition (London University Tutorial Press), Book IV, Chapter V. |
| Delbrück, B. | ... | Introduction to the Study of Language—translated by Humboldt (Gin.). |
| Sen, Dineschandra | ... | History of Bengali Language and Literature (Calcutta University Press). |
| Tagore, Rabindranath | .. | Sabdatattava (Indian Publishing House, Calcutta) |
| Trivedi, Ramendrasundara | ... | Sabdakatha (Sanskrit Press Depository, Calcutta). |
| Pischel, R. | ... | Grammatic der Prakrit Sprachen (Trübner). |
| Encyclopædia Britannica (9th edition) | ... | Article on *Aryan* |
| Stout, G. F. | ... | Analytical Psychology (Geo. Allen), Vol II, Chapter X. |
| Goldstucker | ... | Panini (Reprint by Panini Press, Allahabad). |
| Wackernagel, J. | .. | Altindische Grammatik, Vol. I. (Vandenhoeck and Ruprecht, Gottingen), Introduction |
| Whitworth, G C. | ... | Indian English (Garden City Press, Letchworth) |
| The King's English | ... | (Oxford, 2nd edition.) |
| Noire, L | ... | On the Origin of Language and the Logos Theory (Open Court Publishing Co, Chicago). |
| Bechtel, F. | .. | Die Hauptprobleme der indoger-manische Lautlehre seit Schleicher (Gottingen, 1902). |
| Brugmann, K. | ... | Kurze vergleichende Grammatik der indogermanischen Sprachen (Trubner, Strasburg). |
| Douzat, A | ... | La Philosophie du Langage (Ernest Flammarion, Paris). |
| | | La Vie du Langage (Armand Colin, Paris). |
| Lefevre, A | ... | Race and Language (International Scientific Series, London) |
| Max Muller, F | ... | The Science of Language (2 vols) (Longmans) (This though very readable has to be used with caution as it represents an antiquated view on the Science) |
| | | Three Lectures on the Science of Language (Open Court Publishing Co, Chicago). |
| Meillet, A. | ... | Les Dialectes Indo-Europeens (Honore Champion, Paris) |
| | | Introduction a L'Etude Comparatives des Langues Indo-Europeens (Hachette, Paris). |
| Paul, H. | ... | Prinzipien der Sprachgeschichte (Max Niemyer, Halle a. S). |
| Prozezinski, V. | ... | Einleitung in die Srachwissenschaft (Trubner, Leipzig). |
| Sayce, A H | ... | Introduction to the Science of Language (2 vols) (Trubner). |
| | | Principles of Comparative Philology (Trubner) |
| Whitney, W. D. | ... | Language and its Study (Trubner) Life and Growth of Language (Trubner) Oriental and Linguistic Studies, 1st Series (Scribners, New York), VII-XIII. |
| Wundt, W. | ... | Sprachgeschichte and Sprachpsychologie (Wilhelm Engelmann, Leipzig). |
| Edmonds, J. M. | ... | Comparative Philology (Cambridge) |
| Bhandarkar Commemoration Volume | .. | (Oriental Book Supplying Agency) Essays 29 and 31. |
| Breal, M. | ... | Semantics (tr. by Mrs. Cust; Heinemann). |
| Classen, E. | ... | History of the English Language (Macmillan) |
| Sweet | ... | History of Language (Dent). |

*Paper II.*

| | | |
|---|---|---|
| Mott, F. W. | ... | The Brain and the Voice in Speech and Songs (Harper). |
| Thumb, A | ... | Handbuch des Sanskrit (Karl Winter, Heidelberg), paras. 1-218. |
| Whitney, W D | ... | Oriental and Linguistic Studies, 2nd series (Scribners). |
| Gray, L. | ... | Indo-Iranian Phonology (Columbia University Press). |
| Hirt, H | ... | Der Indogermanische Vocalismus (Karl Winter, Heidelberg, 1921). |
| Jesperson, O. | .. | Lehrbuch der Phonetik (Trubner, Leipzig). |
| Meringer, R. | ... | Indogermanische Sprachwissenschaft (Sammlung Goschen, Leipzig). |
| Reichelt, A. | ... | Awestiches Elementerbuch (Karl Winter, Heidelberg), paras. 31-179 |
| Taylor, I | ... | The Alphabet (2 vols.). |
| Wackernagel | ... | Vol I. |
| Wechseler | ... | Gibt es Laugte setze (Halle a. S ). |
| Encyclopædia Britannica | ... | Articles on *Accent*, *Alphabet*, *Chinese Language Cuneiform*, *Egyptian Language Phonetics*, *Slang and Writing* |
| Giles, Herbert | ... | China and the Chinese (Columbia University Press) Chapter I |
| Macdonnell | ... | Vedic Grammar, specially the treatment of the Accent |

*Paper III.*

| | | |
|---|---|---|
| Thumb | ... | Paras. 219-64 |
| Reichelt | ... | Paras. 180-411. |

*Paper IV*

| | | |
|---|---|---|
| Pischel, R. | ... | Grammatik der Prakrit Sprachen (Trübner, Strasburg) |
| Basu, C. C and Kar, L M | ... | Asoka Anusasana (Metcalfe Printing Works, Calcutta). |
| Francke, R. O | ... | Pali and Sanskrit (Trübner). |
| Bhandarkar Commemoration Volume | ... | Essay 2. |
| Bahechardas Jivaraj | ... | Prakrita Margopadesika (Dharmabhyudaya Press, Benares) |
| Grierson, G. A. | ... | Linguistic Survey of India; Introduction to the various volumes on the Aryan Languages of India. |
| Beames, J. | ... | A Comparative Grammar of the Modern Aryan Languages of India (Trübner). |
| Hœrnle, R. H. | ... | A Comparative Grammar of the Gaudian Languages (Trübner). |
| Bhandarkar, Sir R G. | ... | Wilson Philological Lectures (Mrs. Sagoon, Bombay, 1914). |

Besides the above, special Grammars and texts of the various languages of India may be consulted, such as Kellogg for Hindi, St. Clair Tisdall for Gujrati, Navalkar for Marathi, Trumpp for Sindhi, etc

*Paper VI.*

| | | |
|---|---|---|
| Beames | ... | As for Paper V. |
| Thumb | ... | Paras. 646-760. |
| Speijer, J. S. | ... | Sanskrit Syntax (Leyden). |
| | | Sanskrit und Vedische Syntax (Trübner, Strasburg). |

*Paper VII.*

| | | |
|---|---|---|
| Schrader, O. | ... | Die Indogermanen (Quelle and Meyer, Leipzig). |
| | | Sprachvergleichung und Urgeschichte (Jena). This has also been translated into English by Javons under the title "Prehistoric Antiquities of the Aryan Peoples." |
| Hirt, H. | ... | Die Indogermanen (2 vols.) (Trubner, Strasburg). |

| | | |
|---|---|---|
| Kaegi, A. | ... | Der Rigveda (Trubner). Also translated into English. |
| Max Muller, F. | ... | Comparative Mythology (2 vols.) (Longmans). Biographies of Words and the Home of the Aryas (Longmans) |
| Taylor, I. | ... | Origin of the Aryans (Walter Scott). |
| Whitney, W. D. | ... | Oriental and Linguistic Studies, 1st and 2nd Series (Scribner). |
| Bhandarkar Commemoration Volume | ... | Essays 3, 7 and 8 |
| Tilak, B. G. | ... | Orion (Reprint by Ashtekr & Co., Poona, 1916) The Arctic Home in the Vedas (Ramchandra Govind, Bombay). |
| Haddon, A. C. | ... | The Wanderings of Peoples (Cambridge). |
| Darmesteter, J. | ... | The Zend Avesta, Part I (Sacred Books of the East) Introduction. |
| Jackson, A. W. | ... | Zoroaster. Persia, Past and Present. (The Macmillan Co., New York.) |
| Moulton, J. H | ... | Early Zoroastrianism, Hibbert Lectures, 1912 (Williams and Norgate). |

*Paper VII (Alternative).*

| | | |
|---|---|---|
| Hodgson, B | ... | Essays on the Languages, Literature and Religions of Nepal and Tibet (London). |
| Arden, A S. | ... | Progressive Grammar of the Telugu Language (S. P. C. K. Press, Madras). |
| Vinson, J. | ... | Grammaire Tamoule. |

## MENTAL AND MORAL PHILOSOPHY

*Paper I.—History of Ancient European Philosophy*

The following books are recommended :—

| | | |
|---|---|---|
| Ueberweg | ... | History of Philosophy. |
| Caird | ... | Development of Theology in the Greek Philosophers. Vols. I and II. |
| Zeller | ... | Plato *or* |
| Zeller | ... | Aristotle *or* |
| Gomperz | ... | Greek Thinkers, Vol. IV |
| Burnett | ... | Early Greek Philosophy. |
| Burnett | ... | From Thales to Plato |
| Adams | ... | Religious Teachers of Greece |
| Plotinus | ... | The Enneades—tr Stephen and Mackenna |
| Inge | ... | The Philosophy of Plotinus. |
| *Bakewell | ... | Sourcebook in Ancient Philosophy (Scribner). |
| Benn | ... | The Greek Philosophers. |

Students will be expected to have a special knowledge of the system of Plato or Aristotle and to show an acquaintance with the following special texts .—

Plato's Republic and Aristotle's Ethics.

*Paper II.—Mediæval and Modern European Philosophy.*

The following books are recommended :—

| | | |
|---|---|---|
| Erdmann | ... | History of Philosophy, Vol. II. |
| Adamson | ... | Development of Modern Philosophy. |
| De Wulf | ... | Scholasticism, Old and New. |
| Do. | ... | History of Mediæval Philosophy (Longmans). |
| *Rand | ... | Modern Classical Philosophers (Constable). |
| Perry | ... | Present Philosophical Tendencies |
| *Watson | ... | Philosophy of Kant as Contained in extracts from his own writings. |
| Radhakrishnan | ... | Reign of Religion in Contemporary Philosophy. |
| Webb | ... | History of Philosophy (Home University Library). |

*Part III.—Outlines of Indian Philosophy.*

The following books are recommended :—

| | | |
|---|---|---|
| Max Muller | ... | Six Systems of Indian Philosophy. |
| Deussen | ... | Philosophy of the Upanishads. |
| Rhys Davids | ... | Dialogues of Buddha, Vol. I. |
| *The Ten Upanishads | | |
| *Madhavcharyya | ... | Sarvadarsana Sangraha (Cowell and Gough). Charvaka, Bauddha, Arhata, Ramanuja, Vaiseshika, Naya, Sankhya, and Patanjala Systems. |
| *Sankara | ... | Commentary on the Vedanta Sutras, Second Adhyaya, Padas I and II (Thibaut). |
| *Ramanuja | ... | Commentary on the Vedanta Sutras, first Sutra, Pada I, Adhyaya I. |
| Seal, B. N. | ... | Positive Sciences of the Hindus [Chapters I (pages 1-56), VI (pages 218-19), and VII]. |
| Urquhart | ... | Pantheism and the Value of Life. |
| Das Gupta, S. N. | ... | History of Indian Philosophy. |

*Papers IV, V, VI, VII*

*Any two of the following subjects* to be selected by the candidate, two papers being set in each :—

(i) PSYCHOLOGY.

The following books are recommended :—

| | | |
|---|---|---|
| *James | ... | Principles of Psychology. |
| *Wundt | ... | Human and Animal Psychology. |
| *Stout | ... | Analytic Psychology. |
| Lloyd Morgan | ... | Comparative Psychology. |
| *Rand | ... | Classical Psychologists. |
| Ward | ... | Psychological Principles. |
| McDougall | ... | Physiological Psychology. |
| Ditto | ... | Introduction to Social Psychology. |
| Bernard Hart | ... | Psychology of Insanity. |

(ii) LOGIC

Students are allowed to take up any *one* of the following two alternative courses in Logic :—

(*a*) *Logic as Epistemology and Inductive Logic or Methodology.*

(*b*) *Logic as Metaphysics and Dialectics.*

The following books are recommended :—

(*a*) *Logic as Epistemology and Methodology*—

| | | |
|---|---|---|
| Lotze | ... | Logic. |
| *Bosanquet | ... | Do. |
| Mill | ... | System of Logic. |
| Hobhouse | ... | Theory of Knowledge. |
| Venn | ... | Empirical Logic. |
| Jevons | ... | Principles of Science. |
| Keynes | ... | Formal Logic. |
| Bradley | ... | The Principles of Logic. |
| Wittgensteur | ... | Tractatus Logico—Philosophicus. |

Encyclopædia of the Philosophical Sciences, Vol. I, Logic (Macmillan).
Essays in Critical Realism.

(*b*) *Logic as Metaphysics and Dialectic*—

| | | |
|---|---|---|
| *Kant | ... | Critique of Pure Reason. |
| Fichte | ... | The Science of Knowledge, translated by A. Troeger, with a preface by W. T. Harris (Trubner & Co.). |
| *Wallace | ... | "Logic of Hegel" and Prolegomena. |
| Mc'Taggart | ... | Studies in Hegelian Dialectic. |
| Lotze | ... | Metaphysics. |
| Croce | ... | Logic. |
| Gentiliet, G. | ... | The Theory of Mind as Pure Act. |

(iii) ETHICS AND SOCIAL PHILOSOPHY.

The following books are recommended :—

| | | |
|---|---|---|
| *Green | ... | Prolegomena to Ethics. |
| *Sidgwick | ... | Methods of Ethics and Short History of Ethics. |
| Wundt | ... | Ethics. |
| Kant | ... | Theory of Ethics. |
| Sterrett | ... | Ethics of Hegel. |
| Herbert Spencer | ... | (a) Principles of Sociology, Vols. I and II (Political Institutions only). (b) Ethics. |
| Croce | ... | Aesthetic. |
| *Gidding | ... | Principles of Sociology. |
| *Rand | ... | Classical Moralist. |
| Crose | ... | Philosophy of the Practical |

Students will be expected to show an acquaintance with *either* of the following texts :—

Aristotle's Ethics *or* Spinoza's Ethics.

(iv) PHILOSOPHY OF RELIGION.

The following books are recommended —

| | | |
|---|---|---|
| Lotze | ... | Outlines of the Philosophy of Religion. |
| *Hegel | ... | Philosophy of Religion (Spiers and Sanderson), Part I |
| Pfleiderer | ... | Philosophy and Development of Religion, Vol. I (Gifford Lectures) |
| *Royce | ... | The World and The Individual. |
| Ward | ... | Realm of Ends (Pluralism and Theism) |
| Do. | ... | Naturalism and Agnosticism |
| Pringle Pttison | ... | Idea of God (Gifford Lectures). |
| Sorley | ... | Moral Values and the Idea of God (Gifford Lectures). |

(v) SPECIAL BRANCH OF INDIAN PHILOSOPHY.

Any one of following groups .—

(1) The Nyaya Sutras of Gautama with Bhashya of Vatsyana
The Bhasha-Parichheda with Siddhanta Muktavali
(2) The Sankhya Sutras.
The Yoga Sutras
(3) The Vedanta Paribhasa.
Sankara's commentary on the Vedanta Sutras (the first four Sutras and Addyay II, Padas I and II).
Ramanuja's commentary on the Vedanta Sutras (the first four Sutras).
(4) The Sutras of Kanada with Bhashya of Prasastapada.
The Bhasha-Parichcheda with Siddhanta Muktavali.
(5) Sankara—Commentary on the Vedanta Sutras—Thibaut (the first four Sutras).
Ramanuja—Commentary on the Vedanta Sutras—Thibaut (the first four Sutras)
Isvarakrishna—Sankhyakarika, translated by Colebrooke.
Parasastapada—Vaisesikabhasya, translated by Ganganath Jha. (Reprint from the Pandit.)"

EXPERIMENTAL PSYCHOLOGY.

*Paper I.—Physiological.*

| | | |
|---|---|---|
| Lickley | ... | The Nervous System. |
| Greenwood | ... | Physiology of the Special Senses (Selections). |
| Wundt | ... | Physiological Psychology (Selections). |
| Titchener | ... | Text Book of Psychology. |
| Myers | ... | Text Book of Experimental Psychology. |
| Kulpe | ... | Outlines of Psychology. |
| Wundt | ... | Ditto. |
| James | ... | Principles (Selections). |
| Stout | ... | Analytic Psychology (Selections). |
| Ladd and Woodworth | ... | Elements of Physiological Psychology (Selections). |
| Rand | ... | Classical Psychologists. |

*Paper II.—Abornal Psychology.*

| | | |
|---|---|---|
| Mercier | ... | Text Book of Insanity. |
| Sidis and Goodhart | ... | Multiple Personality. |
| Prince | ... | The Unconscious. |
| Jung | ... | Analytical Psychology |
| Freud | ... | Interpretation of Dreams. |
| Do. | ... | Hysteria and other Psychoneuroses. |
| Do | ... | Introduction to Psychoanalysis. |
| Hitschmann | ... | Freud's Theory of Neuroses. |

*Paper III—Animal Psychology.*

| | | |
|---|---|---|
| Holmes | ... | Evolution of Animal Intelligence |
| Lloyd Morgan | ... | Comparative Psychology. |
| Washburn | ... | Animal Mind. |
| Thorndike | ... | Animal Intelligence (Selections). |
| Loeb | .. | Comparative Anatomy of the Brain and Comparative Psychology (Selections). |
| Romanes | ... | Animal Intelligence. |
| Hobhouse | ... | Mind in Evolutions. |

*Paper IV.—Child Psychology.*

| | | |
|---|---|---|
| Tredgold | ... | Mental Deficiency. |
| Preyer | ... | Mind of the Child, 2 vols. |
| Pyle | ... | Educational Psychology. |
| Munro | ... | History of Education (Modern period). |
| Thorndike | ... | Educational Psychology (Briefer course). |
| Tracy | ... | Psychology of Childhood. |
| Kirkpatrick | ... | Fundamentals of Child Study. |

Practical work—

| | | |
|---|---|---|
| Myers | ... | Text Book of Experimental Psychlogy, Vol. II. |
| Titchener | .. | Students' Manual—Qualitative and Quantitative. |
| Sanford | ... | Experimental Psychology. |
| Whipple | ... | Physical and Mental Tests. |

## HISTORY.

*Paper I.*—Selected period of English History

The Reign of Queen Victoria—1837-1900.

| | | |
|---|---|---|
| *Sidney Low | ... | Political History of England, Vol. XII. |
| *Cambridge Modern History, Vols. X-XII. | | |
| *Traill | ... | Social England, Vol. VI. |
| *Seeley | ... | Expansion of England. |
| *Egerton | ... | British Colonial Policy |
| *Morley | ... | Gladstone. |
| Froude | ... | Disraeli. |
| Bright | ... | Speeches. |
| Cobden | ... | Ditto |
| Benn | ... | Modern England. |
| Slater | ... | Making of Modern England |
| Paul | ... | History of Modern England. |
| McCarthy | ... | History of our Own Times. |
| Queen Victoria's Letters. | | |
| J. A. R. Marriott | ... | England since Waterloo. |

*Paper II.*—Selected period of Indian History, from 600 B.C. to 900 A D.

| | | |
|---|---|---|
| *Manu | ... | Institutes (Translated by Bühler), Chapters 2, 3, 6, 7, 10. |
| *Kautilya | ... | Arthasastra (Translated by R. Shama Sastri), Books 1, 2, 5, 6, 7, 8, 11. |
| Rangaswami Aiyangar | ... | Ancient Indian Polity. |
| Rhys Davids | ... | Buddhist India. |
| V. A. Smith | ... | Asoka (3rd edition). |
| *R. G. Bhandarkar | ... | Early History of the Deccan. |
| *G. N. Banerjee | ... | India as known to the Ancient World. |
| *Krishnaswami Aiyangar | ... | Beginnings of South Indian History, Chapters 1-3. |
| *D. R. Bhandarkar | ... | Carmichael Lectures, First Series. |

* Candidates are required to possess a thorough acquaintance with the books marked with an asterisk

| | | |
|---|---|---|
| *Megasthenes | ... | Indica. |
| The Periplus of the Erythraen | ... | Sea (Translated by Schoff) |
| *†Fa Hien | ... | Travels (Translated by Legge). |
| *†Yuan Chwang | ... | Travels in India (Translated by Watters) |
| *V. A. Smith | ... | Early History of India (3rd edition). |

(Students are expected to possess a general knowledge of the Ancient Geography of India).

*Paper III.*—General History of the Ancient East.

| | | |
|---|---|---|
| Breasted | ... | History of Egypt. |
| Ditto | ... | Development of Religion and Thought in Ancient Egypt |
| Jastrow | ... | Civilisation of Babylonia and Assyria |
| Rogers | ... | History of Babylonia and Assyria, 1917. |

*Paper IV.*—Constitutional History of England.

| | | |
|---|---|---|
| Stubbs | ... | Constitutional History of England. |
| Hallam | ... | Ditto |
| Erskine May. | ... | Ditto |
| Pollock and Maitland | ... | Domesday Book and Beyond (New edition) |

Documents and Extracts illustrative of English Constitutional History (Calcutta University)

Candidates are expected to possess a detailed knowledge of the Constitutional History since 1688 and only a general knowledge of the earlier period

*Paper V.*—International Law

| | | |
|---|---|---|
| Oppenheim | ... | International Law. |
| Hall | ... | Ditto |
| Stowell and Munro | ... | International Cases, 2 vols. |
| Pollock | ... | League of Nations. |
| P. N. Banerjea | ... | International Law in Ancient India. |
| Garner | ... | Development of International Law in the 20th Century. |

*Papers V and VII.*

On any one of the following subjects —

(i) HISTORY OF ISLAM

| | | |
|---|---|---|
| *Muir | ... | Caliphate |
| *Zeydan | ... | Umayyades and Abbasides. |
| *Khuda Buksh | ... | Islamic Civilization |
| Ditto | .. | Orient under the Caliphs |
| Ditto | ... | Politics in Islam |
| *Goldziher | ... | Mohammed and Islam (Tr. Seelye) (Yale University Press). |
| Freeman | ... | History and Conquest of Saracens. |
| Gibbon | ... | Decline and Fall of the Roman Empire, Chapters 50-52, 56-59, 64, 65, 67, 68. |
| Ameer Ali | ... | History of the Saracens. |
| *Elphinstone | ... | History of India. |
| *Elliot | ... | Ditto. |
| *Ferishta | ... | History of the Rise of the Mohammedan Power (Tr. Briggs). |
| *Babar | ... | Memoirs (Clarendon Press). |
| Vincent Smith | ... | Akbar. |
| *Owen | ... | India on the Eve of the British Conquest. |
| Do. | ... | Fall of the Moghul Empire. |
| Keene | ... | Ditto. |
| J. N. Sarkar | ... | Mughal Administration ; History of Aurangzib. |
| Irvine | ... | Later Moghuls. |
| *Hitti | ... | Origins of the Islamic State (Columbia University Press). |
| *Aghnides | ... | Mohammedan Theories of Finance (Columbia University Press). |

*Cambridge Mediæval History, Volume II, Chapters 10-12.

* Candidates are required to possess a thorough acquaintance with the books marked with an asterisk

† Candidates are not required to possess a minute knowledge of geographical details.

(ii) SPECIAL PERIOD OF INDIAN HISTORY.

One of the following alternative courses :—

A

*History of Bengal, Political, Administrative, Social and Economic, 1757-1793.*

Students are recommended to consult the following books —

| | | |
|---|---|---|
| Mill and Wilson | .. | History of British India |
| Golam Hussein Khan | ... | Siyar-ul Mutakherin |
| Holwell | ... | Interesting Historical Events |
| Verelst | .. | View of English Government in Bengal. |
| Vansittart | ... | Narrative of Transactions in Bengal |
| Bolt | ... | Considerations on Indian Affairs. |
| N L Hallward | .. | William Bolt |
| Akshaykumar Maitra | .. | (a) Sirajadaulla<br>(b) Mirkasim |
| Forrest | ... | Life of Clive |
| Carraccioli | ... | Ditto |
| Hill | ... | Three Frenchmen in Bengal |
| Gleig | ... | Warren Hastings. |
| Monckton Jones | .. | Warren Hastings in Bengal |
| Forrest | ... | State Papers (Warren Hastings) |
| Warren Hastings | ... | Indian Tracts |
| Burke | ... | Speeches on the Impeachment of Warren Hastings |
| Cowell | ... | History of the Courts and Legislative Authorities in India |
| Stephen | ... | Nuncomar and Impey |
| Beveridge | ... | Trial of Nandakumar |
| Busteed | ... | Echoes of Old Calcutta. |
| Kaliprasanna Banerjee | .. | Nawabi Amal |
| Nikhilnath Ray | .. | Murshidabad |
| Walsh | ... | Ditto |
| Carey | ... | Good Old Days of John Company. |
| Hunter | ... | Annals of Rural Bengal |
| Francis | ... | Minutes on Permanent Settlement. |
| Colebrooke | ... | Husbandry in Bengal. |
| R. C. Dutt | ... | Economic History of India under Early British Rule. |
| Grant | ... | History of the East India Company. |
| Harrington | ... | Analysis of Bengal Regulations. |
| Greville | ... | British India Analysed |
| Cornwallis | ... | Correspondence (Ed Ross). |
| Aitchison | ... | Treaties |
| Ascoli | ... | Land Revenue Administration. |

Fifth Report of the Select Committee on the Affairs of the East India Company, Bengal Presidency, including Grant's Analysis, edited by Firminger.
Bengal Regulations, 1793
Bengal, Past and Present.

B.

*History of the Rajputs (from the advent of the Mahomedans in India to the treaty with the English in 1818).*

(*English.*)

| | | |
|---|---|---|
| Tod | ... | Annals and Antiquities of Rajasthan. |
| Tod | ... | Travels in Western India. |
| Rajputana Gazetteer | ... | Edited by Major Erskine, 1908-09. |
| Haravilas Sarda | ... | Rana Kumbha. |
| Haravilas Sarda | ... | Rana Sanga. |
| Elliot | ... | History of India as told by its own Historians. |
| Brooke, J. C. | ... | History of Mewar. |
| Strätton, J. P. | ... | Chitor and the Mewar Family. |
| Lala Sitaram | ... | History of Sirohi |

*(Hindi.)*

Pandit Gaurishankar Ojha ... History of Sirohi.
Tod ... Rajasthan, edited by Gaurishankar Ojha.
Muta Nensi Khyata.
History of Jaisalmeer (published by the Jaisalmeer Darbar)
Devi Prasad ... History of the Kings of Jaipur and Jodhpur.
History of Bikaneer (Nagari Pracharini Sabha)

C

*History of the Mahrattas*

*Grant Duff ... History of the Mahrattas (Oxford Press)
Kincaid and Parasnis ... A History of the Maratha People, 2 vols
Sarkar ... Shivaji and His Times.
*Ranade ... Rise of the Maratha Power, Vol I
*Forrest ... Selections from Bombay Records—Mahratta Series.
*Owen ... Selections from Wellesley's Despatches.
*Owen ... Selections from Wellington's Despatches
*Malcolm ... Memoir of Central India, Vols I and II.
*Franklin ... Shah Alum
*Elphinstone ... Official Writings of Mountstuart Elphinstone, Ed Forrest
*Ranade ... Introduction to the Peshwas' Diaries
* Do. ... Currencies and Mints under Mahratta Rule
Keene ... Fall of the Moghul Empire.
*S N. Sen ... Documents and Extracts relating to Maratha History, Vol I, Shivaji (Calcutta University)
S N Sen ... Administrative System of the Marathas

*Works of Reference.*

Chitnis Bakhar.
The Peshwas' Diaries, selected by R B. Wad, 9 vols
Rajwade ... Marathyanchya Itihasanchi Sadhanen, 20 vols.
Khare ... Aitihasik Lekha Sangraha, 9 vols
Elliot ... History of India, Vols VII and VIII
Ferishta .. History of the Deccan (Tr Scott)
W. H Tone ... Some Institutions of the Mahrattas
Aitchison ... Treaties.

D

*History of the Sikhs.*

Cunningham ... History of the Sikhs.
Macgregor ... History of the Sikhs
M. Latif ... History of the Punjab.
Faulkner ... History of the Sikhs
Wilson ... Religious Sects of the Hindus.
MacQauliffe ... The Sikh Religion.
Gokulchand Narang ... The Transformation of Sikhism.
Khazan Singh ... History and Philosophy of the Sikh Religion.
Lepel Griffin ... Ranjit Singh (Rulers of India Series).
Baird ... Private Letters of the Marquess of Dalhousie.
Despatches of Lord Gough.
Despatches of Lord Hardinge.
Gough and Innes ... The Sikhs and the Sikh Wars.
C. Wade ... Our Relations with the Punjab.
Prinsep ... Origin of the Sikh Power in the Punjab.
Malcolm ... Sketch of the Sikhs.
Osborn ... Court and Camp of Runjeet Singh.
Aitchison ... Treaties.
Bell ... Annexation of the Punjab.

(iii) THE CONSTITUTIONAL HISTORY OF BRITISH INDIA AND THE BRITISH DOMINIONS.

Keith ... Selected Speeches and Documents on British Colonial Policy, Vols I and II, 1763 1917.
Do. ... Responsible Government in the Dominions.
Duncan Hall ... The British Commonwealth of Nations, 1920.
Tarring ... Law relating to the Colonies
Egerton and Grant ... Selected Speeches and Documents relating to Canadian Constitutional History (1907).

Lord Durham's Report, Edited by Lucas, Vol. I and Vol. II.

| | | |
|---|---|---|
| Munro | ... | Constitution of Canada. |
| Wise | ... | The Making of the Australian Commonwealth, 1819-1900. |
| Brand | ... | Union of South Africa (1900). |
| Eybers | ... | Selected Constitutional Documents illustrating South African History, 1795-1910. |
| P. Mukerjee | ... | Indian Constitutional Documents. |
| Ditto | ... | Indian Constitution. |
| Ilbert | ... | Government of India. |
| Aiyyangar | ... | Indian Constitution. |
| Curtis | ... | Dyarchy. |
| Montagu-Chelmsford Report. | | |
| Cowell | ... | Constitution of Courts in India. |
| Ghose | ... | Comparative Administrative Law. |
| Montagu | ... | Speeches. |
| Egerton | ... | Federations and Unions in the British Empire. |
| Bryce | ... | Modern Democracies. |
| Horn | ... | Political System of British India. |

(IV) MODERN HISTORY OF CHINA AND JAPAN.

*China.*

| | | |
|---|---|---|
| Sih-Gung-Cheng | ... | Modern China—A Political Study (Oxford, 1919) |
| Boulger | ... | Short History of China. |
| H Morse | ... | Trade and Administration in the Chinese Empire. |
| Ditto | ... | International Relations of the Chinese Empire. |
| John W. Foster | ... | American Diplomacy in the Orient. |
| Dingle | ... | China's Revolution. |
| Brown | ... | Chinese Revolution. |
| Bland and Backhouse | ... | China under the Empress Dowager. |
| Smith, A. H. | ... | China in Convulsion |
| Hornbeck | ... | Contemporary Politics in the Far East. |
| Willoughby | ... | Foreign Rights and Interests in China |
| Do. | ... | China at the Washington Conference. |
| Reinsch | ... | An American Diplomat in China. |
| H. M Vinacke | ... | Modern Constitutional Development in China. |
| Willoughby | ... | Constitutional Government in China. |
| Bertrand Russel | ... | Problem of China. |

For Reference.

The China Year Books, 1912-1923.

*Japan.*

| | | |
|---|---|---|
| W. M. McGovern | ... | Modern Japan, Its Political, Military and Industrial Organisation, 1920. |
| George Uyahara | ... | Political Development of Japan, 1867-1909. |
| Brinkley | ... | History of the Japanese People. |
| Count Okuma | ... | Fifty Years of New Japan. |
| Longford | ... | Story of Old Japan. |
| Murray | ... | Japan. |
| Griffis | ... | The Mikado's Empire. |
| Hildreth | ... | Japan as it Was and Is. |
| Murdoch & Yamagada | ... | History of Japan. |
| Hishida | ... | International Position of Japan as a Great Power. |
| Gubbins | ... | The Progressing Japan, 1854-1871. |
| Foster | ... | American Diplomacy in the Orient. |
| Stead | ... | Japan by the Japanese. |
| Porter | ... | The Full Recognition of Japan. |
| Do. | ... | Japan. |
| Hishida | ... | The International Policy of Japan. |
| Longford | ... | Story of Korea. |
| Weale (Simpson) | ... | The Reshaping of the Far East. |
| Lawton | ... | Empires of the Far East. |
| Ladd | ... | In Korea with Marquis Ito. |
| Milard | ... | American and the Far Eastern Question. |
| Asakawa | ... | The Russo-Japanese Conflict. |
| Annual Reports on Reforms and Progress in Korea. | | |
| Aubert | ... | Paix Japonaise. |

| | | |
|---|---|---|
| Weale (Simpson) | ... | The Coming Struggle in Eastern Asia |
| Kalu Kawakamagi | ... | Americo-Japanese Relations. |
| Douglas | ... | Europe and the Far East. |
| The Japan Year Books, 1910-1923. | | |
| Recent Periodical Literature | ... | *See* Poole's Index upon Japan |

(*v*) ECONOMIC HISTORY OF ENGLAND AND INDIA.

| | | |
|---|---|---|
| *Cunningham | ... | Growth of English Industry and Commerce |
| *Bowley | ... | History of England's Foreign Trade in the XIXth Century. |
| Traill | ... | Social England, Vol VI, Economic Section. |
| Buxton | ... | Finance and Politics |
| *Ashley | ... | Economic Organisation |
| R. C. Dutt | ... | Economic History of India under Early British Rule |
| R. C Dutt | ... | India in the Victorian Age. |
| Ascoli | .. | Early Revenue History of Bengal. |
| Banerjea | ... | Indian Fiscal Policy. |
| Report of the Indian Industrial Commission. | | |
| Imperial Gazetteer of India, Vols III and IV (Economic portions). | | |
| History of Commerce in India, 1765-1918 | | |

(*vi*) COMPARATIVE POLITICS.

| | | |
|---|---|---|
| Bryce | ... | American Commonwealth. |
| Do. | . | Modern Democracies |
| *Kautilya | . | Arthasastra (Trans Shama Sastri). |
| Rangaswami Aiyangar | ... | Ancient Indian Polity |
| Pramathanath Banerjea | ... | Public Administration in Ancient India. |
| *Aristotle | ... | Constitution of Athens |
| *Coulanges | ... | Ancient City (Tr Small) |
| Warde Fowler | .. | The City-State of the Greeks and Romans. |
| Maine | .. | Ancient Law |
| *Sidgwick | ... | Growth of European Polity |
| *Freeman | ... | Comparative Politics |
| Woodrow Wilson | .. | Constitutional Government |
| Lowell | ... | Governments of France, Germany and Italy. |
| Vincent | ... | Switzerland |
| Wallace | .. | Government of England. |
| Ogg | .. | Governments of Europe |
| Laski | . | Authority in the Modern State |
| Zimmern | .. | Greek Commonwealth |
| Ghosal | ... | Hindu Political Theories |
| Mookerjee | ... | Local Government in Ancient India. |
| Majumdar | ... | Corporate Life in Ancient India |
| Law | ... | Aspects of Ancient Indian Polity |
| Sarkar | ... | Political Institutions and Theories of the Hindus. |

(*vii*) DEMOCRACY AND NATIONALISM IN EUROPE.

1815—1878.

| | | |
|---|---|---|
| Andrew, C. M. | ... | Historical Development of Modern Europe. |
| Hazen, C. D. | ... | Europe since 1815. |
| Rose, J. Holland | ... | Development of European Nations. |
| Webster, C K. | ... | The Congress of Vienna. |
| Bourgeois, E. | ... | History of Modern France. |
| Simpson, F. A. | ... | Louis Napoleon and the Resettlement of the French Empire |
| Guedalla, P | ... | The Second Empire. |
| Fisher, H. A. L | ... | Bonapartism. |
| Hanotaux, G | ... | Contemporary France. |
| Ward, A. W. | ... | Germany. |
| Grant Robertson, G. | ... | Bismark. |
| Dawson. W H. | ... | German Empire. |
| King, Bolton | ... | History of Italian Unity. |
| Cesaresco, Countess Martinengo | ... | Cavour. |
| King Bolton | ... | Mazzini. |
| Trevelyan, G. M. | ... | Garibaldi and the Making of Italy. |
| Leger, L. | ... | A History of Austria-Hungary. |
| Rainboud, A. | ... | History of Russia |
| Marriott, J. A. R. | ... | The Eastern Question. |
| History of British Foreign Policy (Vol. II). | | |
| Cambridge Modern History (Vols. X and XI). | | |

### (viii) ANTHROPOLOGY.

Outlines of Physical and Cultural Anthropology—

| | | |
|---|---|---|
| *Haddon | ... | Keane's Man Past and Present, Chapters I, II, VI, XII-XV, and conspectus of other Chapters. |
| Marret | ... | Anthropology, Chapters VI-X. |
| *Keane | ... | Ethnology, Chapters I to XII. |
| L. K. A. Iyer | ... | Lectures on Indian Ethnography. |
| Baines | ... | Ethnography, Introduction. |
| *Risley | ... | The Peoples of India, Chapters I, II, IV, V & VI. |
| Chanda | ... | The Indo-Aryan Races, Chapters I-V. |
| Bhandarkar, D. R. | ... | Foreign Elements in the Hindu Population, *Indian Antiquary*, 1911, pp. 7-37. |
| Ray | ... | Principles and Methods of Physical Anthropology. |

Hill Tribes of Assam (General knowledge).

Candidates are recommended to use the following as a preliminary course :—

| | | |
|---|---|---|
| Tylor | ... | Anthropology. |
| Duckworth | ... | Prehistoric Man. |
| Huddon | ... | Wanderings of Peoples. |
| Ditto | ... | History of Anthropology. |

## ANCIENT INDIAN HISTORY AND CULTURE.

### COMPULSORY PAPERS.

#### (1) *General History of Vedic and Epic India.*

Cambridge History of India, Vol. I.

| | | |
|---|---|---|
| *Weber | ... | History of Indian Literature (pages 1-195). |
| *Macdonell | ... | History of Sanskrit Literature (Chaps. I-X). |
| *Jacobi | ... | Das Ramayana. |
| *Hopkins | ... | The Great Epic of India. |
| *D. R. Bhandarkar | ... | Carmichael Lectures, First Series (1918). |
| *Muir | ... | Sanskrit Texts, Vol. V. |
| Kaegi | ... | Rigveda. |
| Zimmer | ... | Altindisches Leben, Book I, Ch. 4, and Book II, Ch. I. |
| Das | ... | Rig-Vedic India. |
| Srinivas Iyengar | ... | Life in Ancient India. |

#### (2-3) *Political History of the post-Epic Period.*

Cambridge History of India, Vol. I.

| | | |
|---|---|---|
| V. A. Smith | ... | Early History of India (3rd edition). |
| Ditto | ... | Asoka (3rd edition). |

Bombay Gazetteer, Vol. I.

| | | |
|---|---|---|
| Krishnaswami Aiyangar | ... | Contributions of Southern India to Ancient Indian Civilization. |
| Ditto | ... | Beginnings of South Indian History, Chaps. 1-3. |
| *Pargiter | ... | Dynasties of the Kali Age. |
| *D. R. Bhandarkar | ... | Carmichael Lectures, First Series (1918). |
| *Stein | ... | Rajatarangini (Introduction). |

#### (4) *Historical Geography of Ancient India.*

Cambridge History of India, Vol. I

| | | |
|---|---|---|
| *Cunningham | ... | Ancient Geography of India. |
| *Periplus of the Erythræan Sea. | | |
| *Ptolemy | ... | Geography of India. |
| Watters | ... | Yuan-Chwang, vols. I-II. |
| Fleet | ... | Topographical List of the Brihatsamhita (*Indian Antiquary*, 1893, pp. 169-195). |

| | | |
|---|---|---|
| Vivien de St. Martin | ... | Etude sur la geographie et les populations primitives du nordouest de l'Inde d'apres les Hymnes vediques |
| Pargiter | ... | Translation of the Markandeya Purana (Bhuvana-kosa only). |
| Foucher | ... | Notes on the Geography of Gandhara |

*Reports of the Archæological Survey of India about Takshasila.
Isipatana, Vaisali, Sravasti, Rajagriha and Kusinara.

## OPTIONAL PAPERS.

### I.—ARCHÆOLOGY (A).

#### (1) *Epigraphy.*

*Inscriptions of Asoka.
*Inscriptions of Kharavela, Sunga and Satavahana Kings.
*Inscriptions of the Kshatrapa families
*Inscriptions of the Imperial Gupta Dynasty.
*Inscriptions of the Pala and Sena Dynasties.
*Gauḍalekhamala (Varendra Research Society).

#### (2) *Numismatics.*

| | | |
|---|---|---|
| *V. A. Smith | ... | Catalogue of Coins in the Indian Museum (up to the end of the Gupta period). |
| *Rapson | ... | Catalogue of Coins Andhras, Western Kshatrapas, etc. |
| *Allan | .. | Catalogue of Coins: Gupta Dynasties. |
| *Whitehead | .. | Catalogue of Coins of the Punjab Museum, Lahore, Vol I |
| Bhandarkar | ... | Carmichael Lectures (Second Series). |

### ARCHÆOLOGY (B).

#### (1) *Fine Arts and Iconography.*

| | | |
|---|---|---|
| *V. A. Smith | ... | History of Fine Arts in India and Ceylon. |
| *Havell | ... | Indian Sculpture and Painting |
| *Gopinath Rao | ... | Elements of Hindu Iconography |
| *Grunwedel | ... | Buddhist Art |
| Foucher | ... | Beginnings of Buddhist Art |
| *G. N. Banerjee | ... | Hellenism in Ancient India. |

#### (2) *Ancient Architecture.*

| | | |
|---|---|---|
| *Fergusson | ... | History of Indian and Eastern Architecture, Vols. I-II. |
| *Havell | ... | Ancient and Mediæval Architecture of India. |

### II.—SOCIAL AND CONSTITUTIONAL HISTORY.

#### (1-3) *Social and Economic Life and Administration.*

| | | |
|---|---|---|
| *Zimmer | ... | Altindisches Leben. |
| Rhys Davids | ... | Buddhist India. |
| *Hillebrandt | ... | Ritualliteratur, Chapters I-II (Grundriss Series). |
| *Fick | ... | Die Sociale Gliederung in Nordostlichan Indien. |
| Mrs. Rhys Davids | ... | Notes on Early Economic Conditions in Northern India. (J. R. A. S, London, 1901, pages 159-188. Economic Journal for 1901.) |
| *Kautilya | ... | Arthasastra. |
| Rangaswami Aiyangar | ... | Ancient Indian Polity |
| *Mahabharata-Santiparva | ... | Sections 56-157. |
| P. N. Banerjea | ... | Public Administration in Ancient India. |
| Manu | ... | Institutes (Trans. Buhler). |
| *Gautama and Baudhayana | ... | Dharma Sutra and Gobhila Grihya Sutras. (Sacred Books of the East Series.) |
| *Alberuni | ... | India (omitting the Mathematical details). (Trans. Sachau.) |
| Periplus of the Erythræan Sea | ... | (Trans. Schoff.) |
| Rawlinson | ... | India and the Western World. |

* Candidates are expected to possess a thorough acquaintance with the books marked with an asterisk

| | | |
|---|---|---|
| *D. R. Bhandarkar | ... | Carmichael Lectures, First Series (1918). |
| R. C. Majumdar | ... | Corporate Life in Ancient India |
| R. K. Mookerjee | ... | Local Government in Ancient India. |
| G. N. Banerjee | ... | India as known to the Ancient World. |
| Ghoshal | ... | Hindu Political Theories. |
| Sarkar | ... | Political Institutions and Theories of the Hindus. |
| Law | ... | Aspects of Ancient Indian Polity. |

(4) *Ethnology.*

| | | |
|---|---|---|
| Tylor | ... | Anthropology. |
| Risley | ... | The Peoples of India with Appendices. |
| Bhandarkar, D. R. | ... | Foreign Elements in the Hindu Population. *Indian Antiquary*, 1911, pages 7-37. |
| Chanda | ... | The Indo-Aryan Races, Part I, Chapters I, II and V |
| Gupte, B. A | ... | Craniometrical Data from the Indian Museum, Calcutta. |

III—RELIGIOUS HISTORY

*General.*

| | | |
|---|---|---|
| *Hopkins | ... | Religions of India (Handbook on the History of Religions Series) |
| *Barth | ... | Les Religions de l'Inde et Bulletins des religions de l'Inde, Vols. I and II. |
| Gupte | ... | Hindu Holidays and Ceremonies |

(1) *Vedic Religions*

| | | |
|---|---|---|
| *Bloomfield | ... | Religion of Veda. |
| *Macdonell | ... | Vedic Mythology |
| *Hillebrandt | ... | Ritualliteratur, Chapters I, III and IV. |

(2) *Epic and Pauranic Religions*

| | | |
|---|---|---|
| *R. G. Bhandarkar | ... | Vaisnavism, Saivism and Minor Religious Systems (omitting XIX-XXV of Part I). |
| Barua | ... | Pre-Buddhistic Philosophy. |
| Raychaudhuri, H C | ... | Early History of the Vaishnava Sect. |

(3) *Buddhism*

| | | |
|---|---|---|
| *Rhys Davids | ... | American Lectures |
| *Mrs. Rhys Davids | ... | Buddhism. |
| *Kern | ... | Manual of Indian Buddhism |
| *Spence Hardy | ... | Manual of Buddhism. |
| *Oldenberg | ... | Buddha. |
| *I-tsing | ... | Records of the Buddhist Religions (Takakusu). |
| *Fa Hien | ... | Travels (Legge). |
| *Warren | ... | Buddhism in Translations. |
| *Hoernle | ... | Manuscript remains of Buddhist Literature found in Eastern Turkestan, Vol. I (the translations and notes only). |
| Barua | ... | Ajivikas. |

(4) *Jainism.*

| | | |
|---|---|---|
| *Jacobi | ... | Introduction and Translation of the Jaina Sutras, Parts I and II (Sacred Books of the East Vols. XXII and XLV). |
| *R. G. Bhandarkar | ... | Report on the Search of Sanskrit Manuscripts in the Bombay Presidency during the year 1883-84, pages 91-157. |
| *Bühler | ... | On the Indian Sect of the Jainas, translated and edited with an outline of Jaina Mythology, by Burgess. |
| Vijyanandasuri | ... | Sri-Jainatattvadarsa. |
| Uvasagadasao | ... | Bib. Ind. Series. |
| Barua | ... | The Ajivikas. |

* Candidates are expected to possess a thorough acquaintance with the books marked with an asterisk

## IV.—INDIAN ASTRONOMY AND MATHEMATICS.

### (1) *Mathematics.*

Selected texts on Mathematics for critical, historical and comparative study —

| | | |
|---|---|---|
| *Thibaut | ... | On the Sulva Sutras. (J. A. S. B., Vol. 44) The Pandit, Vols. 9 and 10 (Old Series; Vols. 1 and 4 (New Series). |
| Bürk | ... | Das Apastamba Sulba-Sutras(. (Z. D. M. G Vols. 55 and 56.) |

### (2) *Mathematics.*

History of Mathematics, with special reference to the work of Aryyabhatta I, Varaha Mihira, Brahmagupta, Mahavira, Sridhara and Bhaskaracharyya.

The following books are recommended :—

| | | |
|---|---|---|
| *Aryyabhatiyam | ... | Edited by Dr. Kern. |
| Brahmasphuta-siddhanta | ... | Edited by Pd. Sudhakara Dvivedi |
| *Mahavira | ... | Ganita-sara-sangraha (Madras). |
| Sridhara | ... | Trisatika, edited by Pd. Sudhakara Dvivedi. |
| Ditto | ... | Edited by G R. Kaye and K Ramanujachariya. |
| Lilavati and Vijaganita | ... | Edited by Pd Sudhakara Dvivedi. |
| Ditto | ... | Edited by Pd. Radhaballabh Jyotistirtha. |
| Lilavati | ... | Edited by H. C Banerji. |
| *Colebrooke | ... | Translation of the Lilavati and the Vijaganita, and the Chapters on Mathematics in the Brahmasphuta-siddhanta. |
| Smith, D E | ... | Hindu-Arabic Numerals. |
| Schubert, H. | ... | Mathematical Essays and Recreations, translated by T. J. McCormack. |

### (3) *Astronomy.*

Selected text on Astronomy for critical, historical and comparative study —

*Suryya Siddhanta

Editions and Translations recommended —

| | | |
|---|---|---|
| Suryya Siddhanta | ... | With Ranga Natha's Commentary |
| Ditto | ... | Translated by Burgess and Whitney (J. Am Orient Society, Vol. VI). |

### (4) *Astronomy.*

History of Astronomy, with special reference to Jyotisha-Vedanga, Jaina Astronomy, the (modern) Suryya Siddhanta, and to the works of Aryyabhatta I, Varaha Mihira, Brahmagupta, Munjala, and Bhaskaracharyya.

The following books are recommended :—

| | | |
|---|---|---|
| Yajusha Jyotisham | ... | By Pd. Sudhakara Dvivedi. |
| *Thibaut | ... | Contributions to the Study of the Joytisha-Vedanga. (J. A. S. B, 1877) |
| Ditto | ... | On the Suryyaprajnapti. (J. A. S., B. 1880.) |
| *Aryyabhatiyam | ... | Edited by Dr. Kern. |
| *Pancha-Siddhantika | ... | Translated by Dr. Thibaut and Pd. Sudhakara Dvivedi. |
| *Kern | ... | Preface to the Brihat-Samhita of Varaha Mihira (Collected Works, Vol. 4) |
| Brahmasphuta-siddhanta | ... | Edited by Pd. Sudhakara Dvivedi |
| *Bhaskara | ... | Siddhanta Siromany, edited by Pd. Bapudev Shastri. |
| Ditto | ... | By Pd. Bapudev Shastri and Wilkinson. |
| *Bentley, J. | ... | Hindu Astronomy. |
| Bailley, J. F. | ... | Histoire de l'astronomie ancienne depuis son orgine jusqu's l'establisment de l'ecole d'Alexandria (1171). |

* Candidates are required to possess a thorough acquaintance with the books marked with an asterisk.

| | | |
|---|---|---|
| Playfair | ... | (1) On the Astronomy of the Brahmans.<br>(2) On the Trigonometry of the Brahmans. (Collected Works, Vol. III.) |
| *Brenand | ... | Hindu Astronomy. |
| *Whitney | ... | Oriental and Linguistic Studies (Series II, 1875), The Twelfth Essay—The Lunar Zodiac, on the views of Biot and Weber respecting the relations of the Hindu and Chinese systems of asterisms; with an addition on Müller's views, etc. |
| Max Müller | ... | On Ancient Hindu Astronomy and Chronology. (Preface to Rig Veda, Vol. 4.) |
| *Thibaut | ... | Grundiss der Indo-arischen Philologie, Vol. III, No. 9.<br>Articles in the "Indian Thought on the History of Indian Astronomy." |
| Bhau Daji | ... | Literary Remains. |
| Tilak | ... | The Orion |
| Do. | ... | The Arctic Home of the Vedas |
| Jones | ... | Articles on Indian Astronomy (Collected Works, Vol I) |
| Davis, S. | ... | On Hindu Astronomy (As. Res. Vol. II). |
| Montucla | ... | Histoire des Mathematiques, Vol I, Part 1, Book 3. |
| Delambre | ... | Histoire del' Astronomie, Vol. I. |
| Marie | ... | Histoire des Sciences mathematiques et physiques, Vol. II.<br>(The Articles on Aryyabhatta, Brahmagupta and Bhaskara.) |
| Cantor | ... | Geschichte der Mathematik. |
| Newcomb | ... | Astronomy |

V.—ANTHROPOLOGY.

*Paper V.*

Physical Anthropology including origin and antiquity of Man—

| | | |
|---|---|---|
| Haddon | ... | Keane's Man Past and Present |
| Risley | ... | The People of India, Chapter I. |
| Chanda | ... | The Indo-Aryan Races, Part I, Chapters I and II. |
| Keane | ... | Ethnology. |

*Paper VI.*

Social Anthropology—

| | | |
|---|---|---|
| Marett | ... | Anthropology (Home University Library), Chapters VI-X |
| Risley | ... | The People of India, Chapters II and III-VI. |
| Chanda | ... | The Indo-Aryan Races, Chapters II, III-IV. |
| Clodd | ... | Animism. |
| Haddon | ... | Magic and Fetishism. |

*Paper VII.*

Pre-Historic Archæology and Technology—

| | | |
|---|---|---|
| Parkyn | ... | Pre-Historic Art. |
| Osborn | ... | Men of the Old Stone Age. |
| Mitra | ... | Pre-Historic Cultures and Races of India. |
| Churchward | ... | Origin of the Human Race. |
| O. T. Mason | ... | Primitive Art. |

*Paper VIII.*

Indian Ethnography, with special reference to Bengal or Assam—

| | | |
|---|---|---|
| L. K. A. Iyer | ... | Lectures on Ethnography (Calcutta University). |
| Baines | ... | Ethnography. |
| Risley | ... | Ethnographic Appendices, Census of India, 1901. |

Generalised accounts of the tribes and castes of the Bengal Presidency from Risley's Tribes and Castes of Bengal, Ethnographical Glossary, or the Tribes and Castes of Assam.

NOTE.—Candidates are recommended to use the following as a preliminary course.—

| | | |
|---|---|---|
| Duckworth | ... | Pre-historic Man. |
| Haddon | ... | Wanderings of Peoples. |
| Ditto | ... | History of Anthropology. |
| Tylor | ... | Anthropology. |

RESOLVED—

That the Proceedings be confirmed.

Read the following Proceedings of the Board of Higher Studies in Mental and Moral Philosophy, dated the 13th April, 1923 :—

That the following Text-books be recommended for the M.A. and M.Sc Examinations, 1925 :—

ANTHROPOLOGY.

*Paper I.*

Physical Anthropology, Zoological and Palæontological—

| | | |
|---|---|---|
| W. H. L. Duckworth | ... | Morphology and Anthropology, Vol I (2d. edn ). |
| Osborn | ... | Men of the Old Stone Age. |
| Schmidt | ... | Mammalia |

*Paper II.*

Physical Anthropology, Morphological, Physiological and Psychological—

| | | |
|---|---|---|
| Haddon | ... | Keane's Man Past and Present, 1920. |
| G. Ruggeri | ... | Outlines of Systematic Anthropology of Asia (Tr. H C. Chakladar). |
| Risley | ... | The People of India, Chapter I |
| Chanda | .. | The Indo-Aryan Races, Chapters I and II. |
| Bhandarkar | ... | "Foreign Elements in the Hindu Population." The Indian Antiquary. 1911, pages 7-37. |

*Paper III.*

Cultural Anthropology, Archæological and Technological—

| | | |
|---|---|---|
| E. A. Parkyn | ... | Pre-historic Art. |
| Osborn | ... | Men of the Old Stone Age. |
| P. Mitra | ... | Pre historic India. |
| Otis Mason | ... | Women's Share in Primitive Culture (Contemporary Science Series). |
| Ditto | ... | Origin of Inventions |

Cultural Anthropology, Linguistic and Social—

*Paper IV.*

| | | |
|---|---|---|
| Franz Boas | ... | Mind of Primitive Man. |
| Marret | ... | Anthropology. |
| Risley | ... | The People of India. |
| Chanda | ... | The Indo-Aryan Races. |

Candidates are expected to possess only an elementary knowledge of the evolution and classifications of languages.

GROUP A.

*Papers V and VI.*

Race. Race characteristics. Physical character to distinguish the various races and sub-races of man. Geographical distribution of Races. Influence of environments on physique.

Racial History of the Caucasic Peoples of Asia, North Africa and Europe

Candidates may specialise either in the Caucasic Peoples of Asia and North Africa or of Europe.

Selected primitive tribes of Chota Nagpur, Assam, Central Provinces, etc.

A (1).

| | | |
|---|---|---|
| Risley | ... | Tribes and Castes of Bengal, Anthropometrical data. |
| Risley and Gupte | ... | Ethnographical Survey of India—volumes containing anthropometrical data. |
| M. A. Czaplicka | ... | The Turks of Central Asia, 1919. |

| | | |
|---|---|---|
| T. A. Joyce | ... | "On the Physical Anthropology of the Oases of Khotan and Keriya" of the Journal of the Royal Anthropological Institute, Vol. 33, pages 315-24; 'Notes on the Physical Anthropology of Chinese Turkestan and the Pamirs" —*Ibid*, Vol. 42, pages 450-484. |
| Gurdon, P. R. T., Major | ... | The Khasis. |
| Hrdlicka | ... | The Peopling of Asia. |
| Luschan | ... | The Early Inhabitants of Western Asia (Huxley Memorial Lecture for 1911). Journ. Roy. Anthr. Inst., Vol. 41, pages 221-44. |
| C. G. Seligmann | ... | The Physical Characters of the Arabs. Journ. Roy. Anthr. Inst., Vol. 47, pages 214. |
| G. Elliot Smith | ... | The Ancient Egyptians (Harper's Library of Living Thought, 1919). |
| C. G. and B. Z. Seligmann | ... | Some Aspect of the Semitic Problem in the Anglo-Egyptian Sudan. Journ. Roy. Anthr. Inst., Vol. 43, pages 593-705. |

A (2).

| | | |
|---|---|---|
| W. Z. Ripley | ... | Races of Europe, 1900. |
| Gustav Retzius | ... | The So-called North European Race of Mankind, (Huxley Memorial Lecture, 1909). |
| John Beddoe | ... | Anthropological History of Europe, 1912. |
| Fleure and James | ... | Geographical Distribution of the Anthropological Types in Wales. Journ. Roy. Anth. Inst., Vol. 46, pages 35-143. |
| V. Giuffrida Ruggeri | ... | A Sketch of the Anthropology of Italy. Journ. Roy. Anthr. Inst., Vol 48, pages 80-102, The Origins of the Italian People. American Journal of Physical Anthropology, Vol. 1, pages 317-28. |
| Fleure and Winstanley | ... | Anthropology and Our Old History, Journ. Royl. Anthr. Inst., Vol. 48, pages 155-58. |
| A. A. Mendis Corea | ... | Origins of the Portuguese, Am. Journ, Phys. Anthropology, Vol II, pages 117-146. |

GROUP B.

Social Anthropology, with special reference to the primitive tribes of India.

| | | |
|---|---|---|
| Emile Durkheim | ... | The Elementary Forms of Religious Life. Eng. Tran. by Swan, pages 1-298. |
| W. H R. Rivers | ... | Kinship and Social Organization. |
| Churchward | ... | Origin and Evolution of the Human Race |
| Sapir | ... | Language. |

Generalised accounts of the religious ideas and practices, social organization and domestic rites and usages of the primitive tribes of India from the volumes on Tribes and Castes of different provinces, District Gazetteers, and separate Monographs and Memoirs.

Candidates may specialise either in the primitive pre-Dravidian tribes or in the Mongoloid tribes.

GROUP C.

Social Anthropology with special reference to the religious and social institutions of the Indian peoples other than primitive tribes.

*Paper V.*

Vedic Religion—

Śaunaka—, Bṛhaddevatā, Translated by A. A. Macdonell. (Harvard Oriental Series.)
Eggeling, Śatapatha Brāhmaṇa, Part 1, pages 1-338, Part II, pages 1-391.

Pauranik—

Raghunandana, Durgotsavatattva (Tithi-tattva, with Bengali translation published by the Bangabasi Press).

Tantrik—

Krishnananda Tantrasāra, Sections relating to Sāmānyapūjā and Kali pujā.

Folk religion—

The Cult of Mangalchandi (Personal observation and investigation).

*Pape VI.*

Caste and Caste Code—

Muir, Sanskrit Texts, Vol. I.
Laws of Manu, Chapters IX and X.
Ambaṭṭha Sutta (Rhys Davids, *Dialogues of the Buddha*, Part 1, pages 96-136).

Madhura Sutta, Chalmer's translation. Journal of the Royal Asiatic Society, 1894, page 341.

Agganna Sutta, the Digha Nikaya Pali Text Society, Vol. III, pages 80-98

Notices of Castes in the Extracts from Megasthenes, in the works of the Chinese pilgrims, and in Alberuni's *India*.

Baine's Ethnography, Strassburg, 1912.

History and generalised accounts of Caste and Caste Code of the different provinces of India to be gathered from the volumes on Castes and Tribes of the different provinces and the publications of the Ethnographic Survey. Candidates may specialise either in the Castes of provinces represented by the *Pancha Gaudas*;—Sarasvata (the Punjab), Kanyakubja (the United Provinces), Maithila (Bihar), Gauda (Bengal), and Utkala (Orissa), or by the *Pancha Dravidas*:—Dravida (Tamil and Malayali), Karnata (Canarese speaking), Trailanga (Telegu), Maharastra (Marathi speaking) and Gurjjara (Gujrat)

*Paper VII.*

Field and Laboratory work under the general guidance of Professors

Notes and Queries on Anthropology, Fourth Edition, Part I, pages 1-16

Aloc Hrdlicka's contribution to anthropometry, craniometry and osteometry to the *American Journal of Physical Anthropology*, Vols. II and III.

*Paper VIII.*

Field work under the general guidance of Professors

Notes and Queries on Anthropology, Fourth Edition, Part II.

C. S. Furne ... Hand book of Folklore, 1914.

Candidates are recommended to use the following as a preliminary course —

| | | |
|---|---|---|
| Tylor | ... | Anthropology |
| Duckworth | ... | Pre-historic Man. |
| Haddon | ... | Wanderings of Peoples. |
| Do | ... | History of Anthropology. |

RESOLVED FURTHER—

"That Mr. H. W. Moreno, B A, be invited to deliver a short course of lectures on 'Mixed Races' during 1923-24."

RESOLVED—

That the Proceedings be confirmed.

Read the following Proceedings of the Board of Higher Studies in Sanskrit, dated the 14th April 1923.

RESOLVED—

That the following text-books be recommended for the M. A. Examination, 1925.—

POLITICAL ECONOMY AND POLITICAL PHILOSOPHY.

*Papers I and II.—General Economics.*

| | | |
|---|---|---|
| *A. Marshall | ... | Principles of Economics. |
| Ditto | ... | Industry and Trade. |
| *Taussig | ... | Principles of Political Economy. |
| *Bastable | ... | International Trade. |
| Cassel | ... | Money and Exchange after 1914 |
| Bartholomew and Lyde | ... | Atlas of Economic Geography (for reference). |

*Paper III.—General Principles of Political Philosophy.*

| | | |
|---|---|---|
| Sidgwick | ... | Principles of Politics. |
| J. S. Mill | ... | Liberty. |
| *Ditto | ... | Representative Government. |
| *Greek | ... | Lectures on Political Obligations. |
| *Willoughby | ... | Nature of the State. |
| Hobhouse | ... | Social Evolution and Political Theory. |
| Cole | ... | Social Theory. |
| Ramsay Muir | ... | Nationalism and Internationalism. |
| Lord, A. R. | ... | Principles of Political Science |

* Candidates are expected to possess a thorough acquaintance with the books marked with an asterisk.

*Paper IV.—Public Administration.*

| | | |
|---|---|---|
| Horne | ... | Political System of British India. |
| *Lowell | ... | Government of India. |
| *Dicey | ... | Law of the Constitution. |
| Bastable | ... | Public Finance. |
| Plehn | ... | Ditto. |
| *Keith | ... | Responsible Government in the Dominions. |
| P. Mukherjee | ... | The Indian Constitution (1920) |

Imperial Gazetteer of India—Vol. IV (Administrative)—

Bengal Local Self-Government Act.
Bengal Village Self-Government Act
Bengal Municipal Act
Indian Railways Act.
Indian Forests Act.

Fifth Report of the Select Committee of the House of Commons, 1812. (Extracts and Documents published by the Calcutta University.)
Introduction to "Early Revenue History of Bengal," Ascoli.

**Group A.**

*Paper V.—General History of Economics.*

| | | |
|---|---|---|
| *Haney | ... | History of Economic Thought. |
| *Gide and Rist | ... | A History of Economic Doctrines. |
| Adam Smith | ... | Select Chapters from Wealth of Nations (Economics Classics Series, Macmillan & Co.). |
| Malthus | ... | Population (Selections, Economics Classics Series, Macmillan & Co.). |
| Ricardo | ... | Political Economy (Selections, Economics Classics Series, Macmillan & Co.). |
| *Meredith | ... | Economics History of England from the Industrial Revolution. |
| Cunningham | ... | Growth of English Industry and Commerce—Modern Times, Part II (Laissez Faire). |

*Papers VI and VII.*—(i) *The History, Theory and Present System of Banking and Currency.*

| | | |
|---|---|---|
| *Conant | ... | Principles of Money and Banking. |
| *Fisher | ... | Purchasing Power of Money. |
| *Dunbar | ... | History and Theory of Banking. |
| Burton | ... | Commercial Crisis. |
| *Withers | ... | Stocks and Shares. |
| Andreades | ... | History of the Bank of England. |
| Layton | ... | Introduction to the Study of Prices. |
| Shirras | ... | Indian Finance and Banking. |
| Rau | ... | Present Day Banking in India. |

Marshall's Evidence, Gold and Silver Commission, 1888.
Report of the Royal Commission on Indian Currency and Finance, 1914.
Report of Babington Smith Committee.

(ii) *History, Theory and Present Organisation of International Trade.*

Chapters bearing on the subject in Ricardo, J. S. Mill and Cairnes.

| | | |
|---|---|---|
| List | ... | National System of Political Economy, Book II. |
| *Pigou | ... | Protective and Preferential Import Duties. |
| Giffen | ... | The use of Import and Export Statistics. (Essay IX in Economic Inquiries and Studies.) |
| Goschen | ... | Foreign Exchanges. |
| P. Ashley | .. | Modern Tariff History. |
| Taussig | ... | Tariff History of the United States. |
| Hooper and Graham | ... | Import and Export Trade |
| Bowley | ... | England's Foreign Trade in the XIX Century. |
| *Brown | ... | International Trade and Exchange. |
| *Taussig | ... | Some Aspects of the Tariff Question. |
| Banerjea | ... | Indian Fiscal Policy. |
| Marshall | ... | Money, Credit and Commerce. |
| Spalding | ... | Foreign Exchange and Foreign Bills in Theory and Practice. |

* Candidates are expected to possess a thorough acquaintance with the books marked with an asterisk

Views of the Government of India on the question of the Proferential Tariffs, 1904, Ed 1913.

Review of the Trade of India (latest issue).

*(iii) The Theory and Practice of Statistics including Demography*

| | | |
|---|---|---|
| *A. L. Bowley | ... | Elements of Statistics (new edition). |
| Jones | ... | First Course in Statistics. |
| Secrist | ... | Introduction to Statistical Methods. |
| *King | ... | Statistical Methods. |
| *Giffen | .. | Statistics. |
| Bowley | ... | Measurement of Social Phenomena |
| *Yule | ... | Introduction to Statistics. |
| Newsholme | ... | Vital Statistics |
| West | ... | Mathemetical Statistics. |
| John Koren | ... | History of Statistics. |
| Frank Zizek | ... | Statistical Averages |

The Jubilee Volume of the Journal of the Royal Statistical Society

British and Foreign Trade and Industries, being memoranda, etc, prepared by the Board of Trade (commonly called the Fiscal Blue Books).

Imperial Gazetteer, Vol. I. Chapters IX and X

Reports on the Moral and Material Progress of India.

*(iv) Mathematical Economics.*

| | | |
|---|---|---|
| *Cunnynghame | ... | Geometrical Political Economy |
| Cournot | ... | Mathematical Principles of the Theory of Wealth (Economic Classics Series, Macmillan & Co ) |
| *Jevons | ... | Theory of Political Economy |
| Marshall | ... | Principles of Economics (Mathematical Appendices). |
| Pigou | ... | Economics of Welfare |
| *Pantaleoni | ... | Pure Economics |
| Edgeworth | ... | Mathematical Psychics |
| Wicksteed | ... | Alphabet of Economic Science. |
| * Ditto | ... | Common Sense of Political Economy. |

Articles by Flux, Seager, Chapman, Pigou and Edgeworth in the "Economic Journal" (bearing on Mathematical Economics).

*(v) Elements of Statistics and the Mathematical Treatment of Economic Theory*

| | | |
|---|---|---|
| Giffen | ... | Statistics. |
| Bowley | ... | Elementary Statistics. |
| *Yule | ... | Introduction to Statistics |
| *Cunnynghame | ... | Geometical Political Economy. |
| Cournot | .. | Mathematrical Principles of the Theory of Wealth (Economic Classics Series, Macmillan & Co.) |
| *Pantaleoni | ... | Pure Economics. |
| Wickstead | ... | Common Sense of Political Economy. |

## Group B.

*Paper V.—General History of Political Philosophy*

Theories of the State contained in—

| | | |
|---|---|---|
| *Aristotle | ... | Politics. |
| *Hobbes | ... | Leviathan. |
| *Locke | ... | Second Treatise on Government. |
| *Rousseau | ... | Social Contract. |
| Kant | ... | Principles of Politics (Hastie's translation of the four Essays on Political Theory). |
| *Bentham | ... | Fragment of Government. |
| *Dunning | ... | History of Political Theories, 3 vols. |
| Barker | ... | English Political Thought. (Home University Library.) . |
| Brown | ... | English Political Theory. |
| Sarkar, B. K. | ... | Political Institutions and Theories of the Hindus. |

*Papers VI and VII—(i) Comparative Study of Political Institutions*

| | | |
|---|---|---|
| *Kautilya | ... | Arthasastra (translation by Shama Sastri). |
| Rangaswami Aiyangar | ... | Ancient Indian Polity. |
| Pramathanath Banerjea | ... | Public Administration in Ancient India. |

* Candidates are expected to possess a thorough acquaintance with the books marked with an asterisk.

| | | |
|---|---|---|
| *Aristotle | ... | Constitution of Athens. |
| Woodrow Wilson | ... | Constitutional Government. |
| *Coulanges | ... | Ancient City (Tr. Small). |
| *Warde Fowler | ... | The City-State of the Greeks and Romans. |
| *Maine | ... | Ancient Law. |
| *Sidgwick | ... | Growth of European Polity. |
| Freeman | ... | Comparative Politics. |
| *Lowell | ... | Governments and Parties in Continental Europe. |
| Ogg | ... | Governments of Europe. |
| Sidney Low | ... | Governance of England. |
| Bryce | ... | Modern Democracies. |
| Ghoshal | ... | Hindu Political Theories. |
| Sarkar, B. K. | ... | Political Institutions and Theories of the Hindus. |

(ii) *Comparative Study of Social Institutions.*

| | | |
|---|---|---|
| *Giddings | ... | Principles of Sociology. |
| *Tylor | ... | Primitive Culture. |
| Frazer | ... | Golden Bough (Abridged Edition) |
| Fairchild | ... | Applied Sociology. |
| Risley | ... | Peoples of India. |
| Wundt | ... | Folk Psychology. |
| Bhudev Mookerjee | ... | Samajik Prabandha. |

Census Reports for India, 1911 and 1921.
Ellwood—Sociology in its Psychological Aspects.
Carveth Read—The Origin of Man and of his Superstitions.
W. R. Inge—Outspoken Essays, Second series.

*For Reference.*

Hobhouse—Development and Purpose, an essay towards a Philosophy of Revolution.
Graham Wallas—Our Social Heritage.
William McDougall—The Group Mind, reprinted, 1921.
Ditto —Introduction to Social Psychology, Sixth edition, 1921.
Gustave le Bon—The Crowd, study of the popular mind, 12th impression, 1920.
Ditto —The Psychology of Revolution.
Hingley—Psycho-analysis, 1921.
Mrs. Gasquoine Harthey—The Truth about Woman, 1914.
Trotter—Instincts of the Herd in Peace & War, 2nd edition, 1919
Knight, Peters & Blanchard—Taboo & Genetics, 1921.
Graham Wallas—Human Nature in Politics, 3rd edition, 1920.
Havelock Ellis—The Task of Social Hygiene, 4th impression 1916.
J. B. Bury—History of the Freedom of Thought, 2nd impression, 1920.
Lothrop Stoddard—The Revolt against Civilisation, 2nd impression, 1922.
Morris Ginsberg—The Psychology of Society, 1921.

(iii) *International Law, with reference to Existing Political and Economic Institutions.*

| | | |
|---|---|---|
| Oppenheim | ... | International Law, Ed. Roburgh. |
| *Hall | ... | Ditto. |
| Higgins | ... | Hague Peace Conference. |
| *Pitt Cobbet | ... | Cases on International Law, 2 vols. |
| Stowell & Monro | ... | International cases, 2 vols. |
| Pollock | ... | League of Nations. |
| J. M. Keynes | ... | Economic Consequences of the Peace (Reprinted 1920). |
| Ditto | ... | A Revision of the Treaty. |
| Garner | ... | Development of International Law in the 20th Century. |

*For Reference.*

| | | |
|---|---|---|
| J. J. Hall | ... | Law of Naval Warfare. |
| Norman Angell | ... | The Fruits of Victory. |

The British Year Book of International Law (third year of issue), 1922-23.
Transactions of the Grotius Society (Problems of Peace and War). First published in 1915.
The American Journal of International Law
Treaty Series, H. E. Stationary Offices :—

No. 4 (1919) Treaty of Versailles.
" 11 " Treaty of St. Germain-en-Laye.
" 5 (1920) Treaty of Neuilly sur Seine.
" 10 " Treaty of Trianon.
" 11 Treaty of Sevres.

* Candidates are expected to possess a thorough acquaintance with the books marked with an asterisk.

History of the Peace Conference at Paris, edited by H. W. V. Temperley, 5 vols., 1920-21.

War and Treaty Legislation, 1914-1921. by J. W. Scobell Armstrong

Private Property and Rights in enemy countries under the Peace Treaties by Paul F. Simonson, 1921.

International Law and the World War by Garner, 2 vols., 1920.

Labours' Magna Charta, a study of the Labour clause of the Peace Treaty and recommendations of the Washington International Labour Conference by Nicholas Chisholm, 2nd edition, 1921.

*Paper VIII.—Essay.*

Groups A and B

Candidates will be required to write an essay on some topics connected with one of the following subjects; essay must treat the topic chosen by the candidate with special reference to Indian conditions—

1. Famines.
2. Co-operation.
3. Railways.
4. Industrial Organisation
5. Currency Problems.
6. Land Systems.
7. Forms of Government.
8. Statistical Studies.
9. Village Communities
10. Labour Problems.
11. Foreign Trade and Exchanges

RESOLVED—

That the Proceedings be confirmed.

Read the following Proceedings of the Board of Higher Studies in Commerce, dated the 13th April, 1923.

RESOLVED—

That the following Text books be recommended for the M.A. Examination in Commerce, 1925;—

COMMERCE

(COMPULSORY PAPER)

*Paper I.—Realistic Economics*

| | |
|---|---|
| Marshall | ... Industry and Trade, Money, Credit and Commerce |
| Haney | ... Business Organisation |
| Bastable | ... International Trade. |
| Sykes | ... Banking and Currency. |
| Easton | ... Money, Exchange and Banking |

*Paper II.—Accounting.*

| | |
|---|---|
| Spicer and Peglar | ... Book-keeping and Accounts. |
| W. M. Cole | ... Problems in the Principles of Accounting (Harvard). |
| Carter | ... Advanced Accounts. |

*Paper III.—Commercial Law.*

| | |
|---|---|
| Smith | ... Mercantile Law. |
| Stevens | ... Ditto. |
| Schaub and Isaacs | ... Law in Business Problems (Macmillan). |
| Davar | ... Indian Mercantile Law. |

*Paper IV.—Banking.*

| | |
|---|---|
| Bagshaw and Hannaford | ... Practical Banking. |
| Easton | .. Money, Exchange and Banking. |
| Moxon | ... English Practical Banking |
| Davis | ... Bank Organisation and Management |
| Poley and Gould | ... Stock Exchange. |
| Turner | ... Commerce and Banking. |
| Rau | ... Present day Banking in India (Calcutta University). |

(OPTIONAL PAPERS.)

*Paper V.—VIII.*

Any four of the following :—

(i) *Industrial Structure and Development.*

Marshall ... Industry and Trade.
MacGregor ... Industrial Combination.
Clapham ... Economic Development of France and Germany, 1815—1915.
Report of the Indian Industrial Commission (1916-18).
A. C. Chatterjee ... Notes on the Industries of the United Provinces.
Large Industrial Establishments in India (Government publication).
Coubrough ... Notes on Indian Piece-goods Trade.

(ii) *Statistics.*

Boddington ... Statistics and their Application to Commerce.
Secrist ... Introduction to Statistics.
Giffen ... Statistics.
Bowley ... Elements of Statistics, Part I.

(iii) *Economic Geography.*

McFarlane ... Economic Geography.
Chisholm ... Handbook of Commercial Geography.
Bartholomew ... Commercial Atlas.

(iv) *Tariffs*

Banerjea, P. N ... Indian Fiscal Policy
Gregory ... Tariffs. A Study in Method.
P. Ashley ... Modern Tariff History.
Higginson ... Tariffs at Work.
Fiske ... International Commercial Policies.
The Indian Tariff Act, The Indian Customs Act.

(v) *Agricultural Economics.*

Leake ... The Bases of Agricultural Practice and Economics in the United Provinces of India.
Ray ... Agricultural Indebtedness.
Study of Indian Villages, by Mann, Keatinge, Jack, etc.
*Nourse ... Agricultural Economics.
*Taylor ... Agricultural Economics (Ed. 1920)
*Carver ... Principles of Agricultural Economics.
Boyle ... Agricultural Economics.
Wolff ... Rural Reconstruction.
Mukherjee, P. ... Co-operative Movement in India.

(vi) *Currency.*

Spalding ... Functions of Money.
*Conant ... The Principles of Money and Banking (Vol. I only).
Hawtrey ... Currency and Credit
Cassel ... Money and Exchange after 1914.
Gregory ... Foreign Exchange before, during and after the war.
*Spalding ... Foreign Exchange and Foreign Bills in Theory and Practice.
H. S. Jevons ... Money, Banking and Exchange (Government of India publications).
*Shirras ... Indian Finance and Banking (Chapters on Currency).
Report on the Committee of Indian Exchange and Currency, 1919 (Babington Smith Report).
Report on the Operations of the Currency Department of the Government of India (Selected years).

(vii) *Public Finance.*

*Plehn ... Public Finance (Ed. 1920).
Adams ... Science of Finance.
*Armitage Smith ... Principles and Methods of Taxation.
*K. T. Shah ... Sixty Years of Indian Finance.
Annals of the American Academy of Political Science, May 1921.

* Candidates are expected to possess a thorough acquaintance with the books mark with an asterisk.

(*viii*) *Auditing.*

| | | |
|---|---|---|
| Spicer and Peglar | ... | Practical Auditing. |
| Pixley | .. | Duties of Auditors |
| Dicksee | ... | Practical Auditing. |

(*ix*) *Business Organisation*

| | | |
|---|---|---|
| F. W. Rafetty | ... | Modern Business Practice, Vol I (The Gresham Publishing Co.) |
| *Stephenson | ... | Principles and Practice of Commerce. |
| Bloomfield | ... | Business Organisation. |
| Dicksee | ... | Ditto. |
| Sparling | ... | Introduction to Business Organisation. |
| Haney | ... | Business Organisation and Combination |

RESOLVED—

That the Proceedings be confirmed.

Read the following Proceedings of the Board of Higher Studies in History dated the 13th April, 1923 :—

RESOLVED—

PURE MATHEMATICS

*Note.*—It is to be understood that, in the following list of books, wherever a book is recommended for a subject, students are expected to read those parts of the book only which deal with that particular subject —

1. Higher Algebra—

| | | |
|---|---|---|
| Chrystal | ... | Algebra, Part II, Chapters 23-28, 32-34 |
| Cullis | ... | Chapters on Algebra |

2. Higher Plane Trigonometry—

| | | |
|---|---|---|
| Hobson | ... | Plane Trigonometry |

3. Spherical Trigonometry—

| | | |
|---|---|---|
| Casey | ... | Spherical Trigonometry |
| Todhunter | ... | Ditto (Ed. Leathem) |

4. Theory of Equations and Algebra of Quantics—

| | | |
|---|---|---|
| Burnside and Panton | .. | Theory of Equations, 2 vols. |
| Glenn | ... | Theory of Invariants (Ginn & Co.) |
| Elliot | ... | Introduction to the Algebra of Quantics |

5. Plane Analytical Geometry, including Higher Plane Curves—

| | | |
|---|---|---|
| Salmon | ... | Conic Sections. |
| Do | ... | Higher Plane Curves |
| Basset | ... | Treatise on Cubics and Quartics |
| S. M. Ganguli | ... | Theory of Plane Curves, 2 vols. |
| Hilton | ... | Higher Plane Curves. |
| Jones | ... | Algebraical Geometry. |

6. Geometry of Surfaces—

| | | |
|---|---|---|
| Salmon | ... | Geometry of Three Dimensions, 5th ed., Vol I, Chapters I-X. |
| Bell | ... | Analytical Geometry of Three Dimensions. |
| Forsyth | ... | Differential Geometry, Chapters I-V. |
| Neville | ... | Prolegomena to Analytical Geometry. |

7. Differential Calculus—

| | | |
|---|---|---|
| Edwards | ... | Differential Calculus. |
| Williamson | ... | Ditto. |
| Goursat | ... | Mathematical Analysis, Vol. I (Trans. by Hedrick. Ginn & Co.) |

8. Integral Calculus—

| | | |
|---|---|---|
| Edwards | ... | Integral Calculus |
| Williamson | ... | Ditto. |
| Todhunter | ... | Ditto. |
| Goursat | ... | Mathematical Analysis, Vol. I (Hedrick, Ginn & Co.) |

* Candidates are expected to possess a thorough acquaintance with the books marked with an asterisk

9. Differential Equations—

| | | |
|---|---|---|
| Piaggio | ... | Differential Equations. |
| Bateman | ... | Ditto. |
| Forsyth | ... | Ditto. |
| Goursat | ... | Mathematical Analysis, Vol II, Part II. (Trans. by Hedrick. Ginn & Co.) |

10. Calculus of Variations—

| | | |
|---|---|---|
| Byerly | ... | Introduction to Calculus of Variations (Harvard University Press). |
| Hancock | ... | Theory of Maxima and Minima (Ginn). |
| Todhunter | ... | Integral Calculus. |
| Williamson | ... | Ditto. |

11. (*a*) Theory of Functions—

*Either* of the following alternative courses .—

A

| | | |
|---|---|---|
| MacRobert | ... | Functions of a Complex Variable (Macmillan & Co.). |
| Townsend | ... | Functions of a Complex Variable (Henry, Holt & Co.). |
| Goursat | ... | Mathematical Analysis, Vol. II, Part I (Trans by Hedrick. Ginn & Co ) |
| Klein | ... | Lectures on Mathematics. |
| Carslaw | ... | Fourier's Series and Integrals. |

B

| | | |
|---|---|---|
| Hobson | ... | Theory of Functions of a Real Variable, 2 vols. (Selected Chapters.) |
| Huntington | ... | Continuum (Harvard University Press). |

(*b*) Theory of Groups—

| | | |
|---|---|---|
| Miller, Blichfeldt and Dickson. | | Finite Groups (John Wiley & Sons). |
| Burnside | ... | Theory of Groups. |
| Klein | ... | Lectures on Icosahedron (Tr. Morrice), Part I only. |
| Hilton | ... | Finite Groups (Oxford). |
| Blichfeldt | ... | Finite Collineation Groups (Chicago University Press). |
| Dickson | ... | Algebraic Equations. |

(*c*) Finite Differences and Calculus of Functions—

| | | |
|---|---|---|
| Boole | ... | Finite Differences. |
| Burn and Brown | ... | Ditto. |
| Carmichael | ... | Calculus of Operations. |
| Herschel | ... | Examples of Calculus of Finite Differences. |
| Babbage | ... | Examples of Functional Equations. |
| DeMorgan | ... | Calculus of Functions. |
| Fraser | ... | Newton's Interpolation Formulas. |

(*d*) Vector Analysis and Quaternions—

| | | |
|---|---|---|
| Joly | ... | Manual of Quaternions. |
| Hamilton | ... | Elements of Quaternions (Ed. Joly), Vol. I, Books I-II. |

(*e*) Projective Geometry—

*Either* of the following alternative courses .—

A

| | | |
|---|---|---|
| Mathews | ... | Projective Geometry. |
| Durell | ... | Plane Geometry for Advanced Students, Vol. II. |
| Cremona | ... | Projective Geometry. |
| Hilbert | ... | Foundations of Geometry (Trans. by Townsend. Open Court Publishing Co.). |
| Silberstein | ... | Projective Vector Algebra. |

B

| | | |
|---|---|---|
| Frankland | ... | Theories of Parallelism (Cambridge University Press). |
| Lobatchevsky | ... | Theory of Parallels (Trans. Halstead. Open Court Publishing Co.) |
| Bolyai | ... | Science Absolute of Space (Trans. Halstead Open Court Publishing Co.). |
| Bonola | ... | Non-Euclidean Geometry (Trans. Carslaw. Open Court Publishing Co.). |
| Carslaw | ... | Non-Euclidean Geometry and Trigonometry. |
| Sommerville | ... | Non-Euclidean Geometry. |
| Manning | ... | Geometry of Four Dimensions. |
| Neville | ... | Ditto. |

(*f*) Theory of Numbers—

| | | |
|---|---|---|
| Reid | ... | Theory of Algebraic Numbers |
| Mathews | ... | Theory of Numbers. |
| Smith | ... | Reports on the Theory of Numbers. (Collected Papers, Volume I, pages 38-364 ) |
| Dedekind | ... | Essays on the Theory of Numbers (Trans. Beman. Open Court Publishing Co ). |
| Huntington | ... | Continuum (Harvard University Press). |
| Cantor | ... | Transfinite Numbers (Translated by P. B. Jourdain. Open Court Publishing Co ) |

G. N. BANERJEE,
*Secretary, Council of Post-Graduate Teaching in Arts.*

SENATE HOUSE, *the 22nd June 1923.*

---

## DEPARTMENT OF AGRICULTURE AND INDUSTRIES, BENGAL.

THE following is published for general information.

J. T. DONOVAN,
*Secretary to the Government of Bengal (offg.)*

## NOTICE.

### Bombay Veterinary College.

THE next session commences on Wednesday, the 1st August 1923, and candidates wishing to join the college should submit their applications as soon as possible.

An entrance examination for those who have not passed either the Matriculation or School Final Examination will be held on 1st August at the college.

All students have to undergo a physical fitness examination at the college, and only those of good physique are admitted.

Further particulars will be forwarded on application to the undersigned.

*The Principal, Bombay Veterinary College.*

PAREL, BOMBAY, *the 25th June 1923.*

## Board of Intermediate and Secondary Education, Dacca.

### Text-books for 1925.

### INTERMEDIATE EXAMINATION.

### I. For all students.

#### 1. English.

| | |
|---|---|
| Stevenson, R. L. | The Treasure Island. |
| Conrad | Typhoon. |

#### 2. Vernacular.

(i) BENGALI.

| | |
|---|---|
| Rabindranath Tagore | Galpaguchcha, Part I. |
| Bankimchandra Chatterjee | Kapala-kundala. |
| Ramendrasundar Trivedi | Charita-katha. |

(ii) URDU.

| | |
|---|---|
| Shibli | Al Mamun. |
| Hali | Musaddas-i-Hali. |
| Habibar Rahman Sherwani | Ulema-i-Salaf. |
| Sir Iqbal | Shikwa. |

### II. One of the following groups to be selected by students.

#### GROUP A (Arts Course).

3 to 6. Any four of the following :—

#### (a) English Literature.

| | | |
|---|---|---|
| Shakespeare | ... | Julius Caesar. |
| Tennyson | ... | The Passing of Arthur. |
| Hardy, Thomas | ... | A Pair of Blue Eyes. |
| Keats | ... | Ode to Autumn and Ode to the Nightingale. |
| Rhys, Ernest | ... | Modern English Essays, Vol. IV (J. M. Dent & Sons). Selections to be notified later. |

#### (b) History.

The following books are recommended for use by students in studying the subject in accordance with the syllabus prescribed :—

| | | |
|---|---|---|
| Breasted and Robinson (Ginn & Co.) | ... | Outlines of European History, Part I, sections 1-22, 58 and 59. |
| Grant, A. J. (Longmans Green & Co.) | ... | Outlines of European History. |
| Higham, C. S S. (Longmans Green & Co.) | ... | History of the British Empire. |

The books are to be supplemented by a general course of lectures on Indian, Chinese and Islamic history and civilisation.

The following book is recommended for more advanced reading and for the guidance of lecturers :—

| | | |
|---|---|---|
| Wells, H. G. | ... | The Outline of History. |

(c) Geography.

The following books are recommended for use by students in studying the subject in accordance with the syllabus prescribed :—

| | | |
|---|---|---|
| Hughes and Gregory | ... | Class-book of Physical and Astronomical Geography. |
| Blandford | ... | Rudiments of Physical Geopraphy for Indian Schools. |
| Smith and Lyde | ... | A Brief Introduction to Commercial Geography (New Edition). |
| Simmons and Richardson | ... | Introduction to Practical Geography. |
| Elderton, W. A. | ... | Maps and Map-drawing. |
| Herbertson | ... | Senior Geography (Post-war Edition). |
| Lyde | ... | The World (Post-war Edition) |
| Fry | ... | Text-book of Geography (Post-war Edition). |

(d) Logic.

The following books are recommended for use by students in studying the subject in accordance with the syllabus prescribed —

| | | |
|---|---|---|
| Ray, P. K. | ... | A Text-book of Deductive Logic |
| Welton, J. | ... | Manual of Logic, Vol. II (Inductive). |

(e) Mathematics.

No text-books are prescribed or recommended

(f) Economics.

The following books are recommended for use by students in studying the subject in accordance with the syllabus prescribed :—

| | |
|---|---|
| Moreland | Introduction to Economics. |
| Banerjee, P N. | Indian Economics |
| Gide | Principles of Political Economics (Only the Chapters bearing on 'Money'). |
| Strickland | Co-operation in India. |

(g) Classical Language.

(i) SANSKRIT.

| | | |
|---|---|---|
| Kalidasa | . | Raghuvansa, Cantos I, II and III. |
| Bhartrihari | . | Nitishataka. |
| Dandin | . | Gomini Vrittanta from Dasakumar Charita. |

(ii) ARABIC.

Calcutta University Selections compiled and edited by E. D. Ross, C.I.E., PH. D. (the whole).

(iii) PERSIAN.

Calcutta University Selections, compiled and edited by E. D. Ross, C.I.E., Ph. D., omitting all Arabic portions and also pages 62—76.

(iv) BENGALI (for female candidates).

| | |
|---|---|
| Kaliprasanna Ghosh | Ma na Mahashakti. |
| Rabindranath Tagore | Loka-sahitya. |
| Syed Imdad Ali | Tapasi Rabeya. |
| Saratchandra Chatterjee | Bindur Chhele. |
| Beharilal Chakrabarti | Vanga Sundari. |
| Kritibas | Ramayan (Ayodhyakanda). |
| Rabindranath Tagore | Chayanika (Selections to be notified later) |
| Michael Madhusudan | Chaturdashpadi Kabita (Selections to be notified later). |

GROUP B (Science Course).

3. Mathematics.

Same as for Group A.

4 to 6. Any three of the following :—

(a) PHYSICS.

The following books are recommended for use by students in studying the subject in accordance with the syllabus prescribed :—

| | | |
|---|---|---|
| Aldous | ... | Elementary Course of Physics. |
| Rajanikanta De | ... | Introduction to the Study of Sound. |
| Glazebrooke | ... | Heat. |
| Glazebrooke | ... | Light. |
| Hadely | ... | Elementary Electricity and Magnetism. |
| Watson | ... | Elementary Practical Physics. |

(b) CHEMISTRY.

The following books are recommended for use by students in studying the subject in accordance with the syllabus prescribed :—

| | | |
|---|---|---|
| Perkin and Lean | ... | Introduction to the Study of Chemistry. |
| P. C. Ray | ... | Elementary Inorganic Chemistry. |
| P. C. Ray | ... | Practical Inorganic Chemistry. |
| Haridas Shaha and Kumudnath Chaudhuri | ... | A Course of Practical Chemistry for Intermediate Students |
| D. N. Mukerjee | ... | Elements of Inorganic Chemistry. |
| Donnington | ... | A Class-book of Chemistry (Parts I-IV) (Macmillan & Co.). |
| H. C. Mookerjee | ... | Inorganic Chemistry. |
| William Jago | ... | Inorganic Chemistry (Stage II) |

(c) BOTANY.

The following books are recommended for use by students in studying the subject in accordance with the syllabus prescribed :—

| | | |
|---|---|---|
| Bailey, L. H. | ... | Botany, an Elementary Text for Schools (latest edition). |
| Fyson, P. F. | ... | Botany for India. |
| Woodhead | ... | The Study of Plants. |
| Bose, G. C. | ... | A Manual of Indian Botany. |

(d) GEOGRAPHY.

Same as Group A.

GROUP C (Islamic Course).

Text-books are printed separately.

GROUP D (Course in Dyeing).

3. Mathematics.

No text-books are prescribed or recommended.

4. Physics.

Same as Group B.

### 5. Chemistry.

(a) INORGANIC CHEMISTRY.

Same as for Group B.

(b) ORGANIC CHEMISTRY

| | | |
|---|---|---|
| Cohen | .. | Class Book of Organic Chemistry |
| Ghosh, J. C. | ... | Organic Chemistry (to supplement the above). |

### 6. Principles of Dyeing.

The following books are recommended for reference —

| | | |
|---|---|---|
| Knevht, E., Rawson, C., Lowenthal, R. | ... | Manual of Dyeing |
| Hubner, J | ... | Dyeing of Vegetable Fibrous Materials. |
| Hummel, J. | ... | Dyeing of Textile Fibres |
| Beech, F. | ... | Cotton Dyeing. |
| Beech, F | ... | Wool Dyeing. |
| Hust, G. | ... | Silk Dyeing |
| Georgevics, G. Von | ... | The Chemical Technology of the Textile Fibres. |

## GROUP E (Commerce Course).

### 3. Book-keeping and Simple Accountancy.

The following book is recommended for use by the students in studying the subject in accordance with the syllabus prescribed —

| | |
|---|---|
| Grierson | Practical Book-keeping for Commercial Classes. |

### 4. Commercial Correspondence and Methods of Business.

The following book is recommended for use by students in studying the subject in accordance with the syllabus prescribed.

| | | |
|---|---|---|
| Patton ... | ... | Commercial Correspondence and Office Routine. (For reference). |
| Pitman ... | ... | Commercial Correspondence and Commercial English. |

5, 6. Any two of the following :-

(a) ECONOMICS.

Same as for Group A.

(b) HISTORY.

The following books are recommended for use by students in studying the subject in accordance with the syllabus prescribed :—

| | | |
|---|---|---|
| Grant, A. J. ... | ... | Outlines of European History. |
| Highman, C. S. S. ... | ... | History of British Empire. |
| Fraser ... ... | ... | British India (Story of the Nation Series). |

Imperial Gazetteer of India—Vol. III, Chap. V, pages—267—305.

As the information given in the Imperial Gazetteer has now become, in some respects, out of date, it should be revised by the teacher in the light of the following books :—

| | |
|---|---|
| Hamilton, C. J. | Trade Relations Between India and England |
| Ainscough, T. M. | Review of the Conditions and Prospects of British Trade in India. |
| Cotton ... | Hand-book of Commercial Information for India. |

(c) GEOGRAPHY.

The following books are recommended for use by students in studying the subject in accordance with the syllabus prescribed :—

| | | |
|---|---|---|
| Thornton | ... | Primary Physical Geography (Longmans, Green & Co.). |
| Blandford | ... | Rudiments of Physical Geography for Indian Schools. |
| Unstead and Taylor | ... | Commercial Geography—General and Regional. |
| Lyde | ... | The World (Post-war Edition) |
| Howarth | ... | Commercial Geography. (Oxford Geographies). (For reference) |
| Chisholm | | Hand-book of Commercial Geography. |
| Imperial Gazetteer of India, Vol III. Bertholomew and Lyde | ... | Atlas of Economic Geography |

(d) MATHEMATICS

No text-books are prescribed or recommended

K. I. HUQUE,

*Secretary, Board of Intermediate and Secondary Education, Dacca.*

DACCA, *the 30th June 1923*

**Board of Intermediate and Secondary Education, Dacca.**

**ISLAMIC INTERMEDIATE EXAMINATION, 1925.**

**1. English.**

| | | |
|---|---|---|
| Stevenson, R. L. | ... | The Treasure Island. |
| Conrad | ... | Typhoon. |

**2. Vernacular.**

(i) BENGALI.

| | | |
|---|---|---|
| Rabindranath Tagore | ... | Galpaguchcha, Part I. |
| Bankimchandra Chatterjee | ... | Kapala-Kundala. |
| Ramendrasundar Trivedi | ... | Charita-katha. |

(ii) URDU.

| | |
|---|---|
| Shibli | Al Mamun. |
| Hali | Musaddas-i-Hali. |
| Habibar Rahman Sherwani | Ulema-i-Salaf. |
| Sir Iqbal | Shikwa. |

### 3. Arabic.

**Poetry.**—Qasidat-ul-Bardah, Qasidat-ul-Farazdaq on Imam Zain-ul-Abedin, Diwan-u-Abil-'Atáhiah.

**Prose.**—Khutabun-Nabiye was Sahábah, up to the end of the Khutbah of Hazrat Mu'áwiah; Maqámat-uz-Zamakhshary, (20 Máqámáhs), Maqámát-ul-Badi', up to the end of Al-Máqámat-ul-Isfahániah, Salásil-ul-Quáah (Ahammul-Ikhtira'át.)

**Rhetoric.**—'Ilm-ul-Adab, (Pt. I) fil-Inshá wal 'Arooz (Up to the end of Chapter II, fil-Badiy'il-Lafziy).

**Grammar, Composition and Essay**—General Exercises.

### 4. Fiqh and Usul.

**Multaqual Abhur.**—Kitabun-Nekáh, up to the end of Kitabis-Sarf omitting BabuNikahir-Raqiq, wal-kafir, Kitabul 'Ataq, Kitabul-Hudood, Kitabus-Sariqah, Kitabus-Sair.

**Khulasat-ul-Usl**—Ta'rifu 'Ilmil-Usul, Mouzu', Ghayah, Ta'rifuil-Hukm, Khitabut-Taklif, Khitabul-Waz'e Al-Adillah

(i) *Ar-Rukn-ul-Awwal*—Ta'rifuil-Kitab, (Al-Khass), Ta'rifuhu, Hukmuhu, Al-Amr, Hukmuhu, Al-Adá, Al-Qazá, Al-Husn, Al-Qubh, Al-Hasan le 'Ainihi wal-Mulhaq bihi, Al-Hasan le Ghairihi wal-Mulhaq bihi, Ta'rifun Nahye wa Hukmuhu, Al-Manhiyu An'hu le 'Ainihi ao le Ghairihi, Hissiyun ao Shary'iun, Ahkamuhu, Al-Mutlaq, Al-Muqayyad, (Al-A'mm) Ta'rifuhu, Hukmuhu, Qasrul-A'mm, Takhsisul-A'mm, Hukmuhu, Alfazul-U'moom, Al-Mashtarak, Al-Jam'ul-Munkar, Az-Zahir, An-Nass, Al-Mufassar, Al-Muhkam, Al-Khafiy, Al-Mushkal, Al-Mujmal, Al-Mutashábeh, Al-Haqiqat wal-Majáz, As Sarih, Al-Kenayah, Ad-Dallu be 'Ibáratihi, be Isharathi, wa be Nassihi, (Babul-Bayán,) Bayánut-Taqrir, Bayánut-Tafsir, Bayánut-Taghyir, Bayanuz-Zururah, Bayanut-Tabdil wa Aqsamuhu.

(ii) *Ar-Ruknus-Sáni*.—Ta'rifus-Sunnah, Mutawatir, Mashhoor, Khabarul-Ahad, Sharáitur Ráwi, Al-Kalám a'lar Ráwi Inqitáu'l-Hadis A'nin Nabiy, At-Ta'an fil Hadis, Mahall-ul-Khabar wa A'nwáu'hu, Fi'luhu Alaihis-Salam, Taqriruhu, Al-Wahyu, Sharáiu' man Qablaná, Taqlidus-Sahábiy

(iii) *Ar-Ruknus-Sális*—Al-Ijmáa', Ruknuhu Ahliatu man Yuna' qidu bihi, Shurutuhu, Marátibuhu, Sanaduhu

(iv) *Ar-Ruknur-Rábe'*.—Al-Qayás, Ta'rifuhu, Bayanu Hujjiatihi, Shurutuhu, Arkánuhu, Ma'rifatul-I'lalish Shary'iah, An Nass, Al-Ijmá'u, Al-Munásabah-Al-I'llatul-Mujawizah wal-Mujibah, Al-Mua'-razah wat-Tarjih, Mabhasul-Ijtihád.

### 5. Hadis (*including Usul-i-Hadis*)

**Mishkát-ul-Masábih.**—Al-Faslul-Awal Was-Sáni min Kulli Báb, omitting the following:—

Salát-ul Khusoof, Al'-Atirah, Al-Haiz, Al-Mustaházah, Al-I'tikáf, Ikhtiláf-ul-Qiráah, Dukhul-u-Makkah, At-Tawaf, Al-Wokuf bi-Arafah, Ad-Dafu' min 'Arafah wal-Muzdalifah, Ramyul Jimár, Al-Hadyu, Al-Halq, Adamu Wojubit-Tartib bainal-Halq wan-Nahr, Al-Muhrim, Khutbatu Youmin-Nahr, Al-Muhrim Yajtanibus-Said, Ihyáuf-Mowát; Ash-Sharb, Al-'Atáyá, An-Nazar ilal-Mukhtubah, Al-Mubasharah, Khayar-ul-Amah ba'dal-Atq, Al Imán Shartun fil-Kaffárah, Al-La'an, Al'Istibrá wa Haqqul-Mamluk, Kitábul-A'tq ilá Ibtidá-i-Ketabil-A'dáb, Bábul-Fitan ilá Ibtidá-i-Bab-i-Fazáile Sayyidil-Mursaleen, Babul-Karámat ilá A'khiril Kitab.

**Usul-i-Hadis.**—General lectures.

### 6. Logic.

TASAWWURAT.

Taqsimul-I'lm.—(Tasawwur, Tasdiq, Badihiy, Nazariy), Al-Mantiq, Al-Hájatu ilaihi, Mouzu', Ghâyat; Ad-Dalâlat, Al-Lafzul-Mufrad wal Murakkab (ilá Akhiril-Aqsám), Taqsim-ul-Mafhum: Al-Kulliy wal-Juzyiy, Al-Kulliyul-Mumtaniu'l-Afrâd wal Mumkinul-Afrâd, (ilá Akhiril-Aqsám); An-Nisabul Arba'ah bainal Kulliyain.

Al-Kulliyatul-Khams.—Al-Jins, An-Nao', Al-Fasl, Al-Khassah, Al-A'razul 'Amm; Taqsimul Arazil-Lazim wal Mufariq; Al-Kulliul Mantiqiy wat-Taby'iy wal-'Aqliy.

Al-Mu'arrif.—Sharáitul-Mu'arrif, Inqisámuhu ilá Aqsámihi.

TASDIQUAT.

Al-Qazáyá.—Al-Qaziyatul-Hamliah, Taqsimuhá: (i) Mujebah, Sálebah, (ii) Shakhsiyah, Taby'iah, Mahsurah, Muhmalah, (iii) Kharijiah, Haqiqiah, Zahniah; Bayanus-Salb wal-U'dool.

Al-Muwajjahát—Al-Basitah wal-Murakkabah.

Ash-Shartiyát—Al-Qaziatu sh-Shartiyah, Taqsimuhá: (i) Mujebah, Salibah, (ii) Muttasilah, Luzumiah, Ittifáqiah, (iii) Haqiqiah, Mania'tul-Jame', Mania'tul Khuluwi minal-Munfasilatil A'nadiah wal-Ittifáquiah; Bayánush-Shakhsiah wal-Mahsurah wal-Muhmalah minash-Shartiyah.

At-Tanáquz.—Sharait-ut-Tanáquz wa Naqizul-Qazáyá.

Al-A'ks.—Al-A'ksul-Mustawiy, A'ksul-Muwajjaha't, A'ksun-Naqiz a'lá rayil-Qudamá.

Al-Qayás.—Al-Istisnayiy, Al-Iqtiraniy, Taqsimul-Iqtirainy (Hamliy, Shartiy); Al-Asghar, As-Sughrá, Al-Akbar, Al-Kubrá, Al-Haddul-Awsat; Al-Ashkálul-Arbá'ah, Sharaitu Intajish-Shaklil-Awal was-Saniwas-Sális; Intajul-Istisnayiil-Ittisaliy wal-Infisaliy; Taqsimul-Qayás (Burhaniy Jadaliy, Khitabiy, She'riy, Safastiy).

General lecturers from such books as Ad-Durus.ul-Mantiqiah, (Cairo), Lubábul-Ishárat (Imám Razi), etc.

### 7. Koran and Kalam.

Al-Qur-án-ul-Karim.—Translation and explanation including Tafsir-u-Ahammil-Maqámát. From the beginning up to the end of Surát-ul-A'araf.

Ma'álim-u-Usul-id-Din (Imám Razi.)—I—VII.

### 8. Islamic History.

Islamic History.—With special reference to the lives of the Prophet and Khulafá-i-Rashideen, with a knowledge of the geography of the subject.

The following books are recommended:—

1. Tabaquat-ibn-Saada.
2. Tarikh-ul-Ummat, Parts I & II (by Aslam Jairajpuri).
3. History of the Saracens, by Syeed Ameer Ali.

K. I. HUQUE,

*Secretary, Board of Intermediate and Secondary Education.*

DACCA, *the 28th June 1923.*

## ORDERS BY THE VICE-CHANCELLOR AND SYNDICATE OF THE CALCUTTA UNIVERSITY.

THE undermentioned candidates are declared to have passed the B. A. Examination held in March 1923 :—

### HONOURS LIST

(Arranged in order of merit)

#### ENGLISH

*Class I*

| | | |
|---|---|---|
| 1 | Mukhopadhyay, Umaprasad | Presidency College. |
| 2 | Malony, Kathleen | Loreto House |
| 3 | Mokhopadhyay, Tarapada | Presidency College. |
| 4 | Carmen Pieme deClosef | Loreto House |
| 5 | Jal Rustomji Modi | St. Xavier's College. |
| 6 | Sen, Jyotsnabikas | Presidency College |
| 7 | A. K. Bazlul Karim | Ditto |
| 8 | Ghose, Latika | Loreto House. |
| 9 | Gupta, Umadas | Rajshahi College. |
| | Majumdar, Prabodhchandra | Scottish Churches College |
| | Sengupta, Bijaykrishna | Presidency College |

*Class II*

| | | |
|---|---|---|
| | Gangopadhyay, Krishnakalidas | St Xavier's College |
| | " Sambhunath | Rajshahi College |
| | Das, Gokulbihari | Wesleyan College, Bankura |
| | Ray, Sureschandra | Presidency College |
| | Basu, Gopalchandra | Bangabasi College. |
| | Bhattacharyya, Priyanath | St Paul's College. |
| | Basu, Prabhatkumar | Vidyasagar College |
| | Bandyopadhyay, Sibendranath | Presidency College |
| | Chaudhuri, Satyendranath | Ditto |
| | Sanyal, Jibandhan | Vidyasagar College |
| 11 | Mukhopadhyay, Samirendranath | South Suburban College, Bhowanipur |
| 12 | " Radhakanor | Scottish Churches College. |
| 13 | Dasgupta, Sisirchandra | Brajamohan College, Barisal. |
| | Mahammad Obaidul Kader | Presidency College. |
| 15 | Mukhopadhyay, Dhirendranath | Scottish Churches College |
| | Basu, Niranjan | Wesleyan College, Bankura |
| 16 | Ghosh, Janakiban | Brajamohan College, Barisal |
| | Lahiri, Pramathanath | Scottish Churches College |
| 19 | Sarkar, Brajendralal | Cooch-Behar Victoria College |
| 20 | Rudra, Sudhirkumar | St Paul's College. |
| 21 | Bagchi, Sasankasekhar | Non-Collegiate Student, Vidyasagar College, Roll Cal N. 59 |
| | Bandyopadhyay, Jadupati | Wesleyan College, Bankura |
| 23 | Ghosh, Kalinganath | Rajshahi College. |
| 24 | Maitra, Bijaychandra | Ripon College |
| 25 | Mohammad Shamsul Huda | Presidency College |
| | Mukhopadhyay, Harischandra | Cooch-Bihar Victoria College. |
| 27 | Ghosh, Kalidas | Presidency College. |
| 28 | Bandyopadhyay, Niranjan | St Xavier's College |
| 29 | Chaudhuri, Renuka | Diocesan College. |
| | Mukopadhyay, Debabrata | South Suburban College, Bhowanipur |
| | Paul, A C. | St. Paul's College. |
| | Veluppilai Thillai Nathan | Scottish Churches College |
| 33 | Ghosh, Ambujaksha | Wesleyan College, Bankura |
| 34 | Panda, Rameswar | Ripon College |
| 35 | Deb, Sudhindrakumar | Presidency College |
| 36 | Chakrabarti, Jitendranath | Vidyasagar College. |
| | Rakshit, Manindrakumar | Chattagong College. |
| | Ray, Adityacharan | Scottish Churches College |
| 39 | Gangopadhyay, Hrishikes | Carmichael College, Rangpur. |
| 40 | Basu, Asutosh | St. Paul's College |
| | Ray, Kirankumar | Krishnagar College |
| 42 | Chattopadhyay, Kalidas, II | South Suburban College, Bhowanipur |
| 43 | Bandyopadhyay, Mahadeb | K N. College, Berhampur |
| | Guharay, Dhirendranath | A. M. College, Mymensingh. |
| 45 | Datta, Sudhansukumar | Scottish Churche College. |
| 46 | Bandyopadhyay, Kanalal | Presidency College |
| 47 | Basu, Ramapati | St. Paul's College |
| 48 | Chattopadhyay, Prakritinath | Non-Collegiate Student, Vidyasagar College, Roll. Cal N. 70. |
| | Mukhopadhyay, Sajibendubhusan | Krishnagar College |
| | Nandi, Nanigopal | South Suburban College, Bhowampur. |

| | | |
|---|---|---|
| 54 | Bhattacharyya, Sadananda | Ripon College. |
| | Macmillan, Gwendoline Elizabeth | Loreto House |
| | Bandyopadhyay, Jatindramohan | Carmichael College, Rangpur |
| | Lahiri, Kshirodkumar | City College, Calcutta. |
| | Mallik, Bikaschandra | Wesleyan College, Bankura. |
| | Sanyal, Sibsadhan | Scottish Churches College. |
| | Sengupta, Bijanbihari | Vidyasagar College |
| | Majumdar, Ganeschandra | St Paul's College |
| | Mukhopadhyay, Taraprasanna | St Xavier's College |
| | Ray, Indubhushan | Ditto |
| | Sen, Abhayacharan | Serampore College |
| | Kulavi, Sushama | Bethune College |
| | Sengupta Kshitischandra | Non-Collegiate Student, Presidency College, Roll Cal N. 221 |
| 64 | Pain, Gobinlal | St Xavier's College |
| | Bandyopadhyay, Dineschandra | Brajamohan College, Barisal |
| 65 | Hajra, Baidyanath | Ripon College. |
| | Ramsurat Lal | Scottish Churches College |
| 68 | Basu, Himansukumar | Vidyasagar College. |
| | Sinhachaudhuri, Ranajitkumar | Scottish Churches College |
| 70 | Ray, Taponath | K N College, Berhampur |
| 71 | Lahiri, Dhirendranath | South Suburban College, Bhowanipur |
| 72 | Ghatak, Manishchandra | Non-Collegiate Student, Presidency College, Roll Cal N 216 |
| 73 | Bandyopadhyay, Subalchandra | St Xavier's College. |
| | Mukhopadhyay, Smarajitchandra | Non-Collegiate Student, City College, Calcutta, Roll Cal N. 207. |
| | Ranbahadur Rai | City College, Calcutta |
| 76 | Das, Satadal | Bethune College |
| | Sen, Binodkumar | Chittagong College, Roll Cal N. 8. |
| 78 | Gomes, C A. | Non-Collegiate Student, Presidency College, Roll Cal N. 224 |
| 79 | Bandyopadhyay, Atankabhanjan | Wesleyan College, Bankura |
| 80 | Chakrabarti, Manindranath | Carmichael College, Rangpur |
| | Mukhopadhyay, Kalipada | St Paul's College |
| 82 | Chakrabarti, Indubhushan | Scottish Churches College |
| | Sarkar, Nirmalananda | Serampore College. |
| 84 | Abdul Hakim | Presidency College |
| 85 | Mukhopadhyay, Arabinda | Non Collegiate Student, Vidyasagar College, Roll Cal N 58. |
| 86 | Datta, Bimalkumar | Scottish Churches College. |
| | Ghosh, Bhabeschandra | Cooch-Bihar Victoria College |
| 88 | Lodh, Nagendrakumar | Vidyasagar College |
| | Mukhopadhyay, Ramendranath | Scottish Churches College. |
| 90 | Pemmaraju Ramakrishna Rao | Presidency College |
| 91 | Muhammad Majibar Rohman | Rajshahi College |
| 92 | Dasgupta, Tarapada | City College, Calcutta |
| 93 | Dattagupta, Jatindralal | Chittagong College |
| 94 | Mukhopadhyay, Mohitmohan | Presidency College |
| 95 | A M. Jalaluddin Ahmad | Ditto |
| 96 | Baidya, Pranjuran | Serampore College. |
| | Bhava Narayana Pillalamarri | St Paul's College |
| | Gupta, Sakhanath | Brajamohan College, Barisal |
| | " Santoshkumar | St Paul's College |
| | Narayan Pain | City College, Calcutta |
| 101 | Chattopadhyay, Sukumar | Bangabasi College |
| 102 | Mallik, Prakaschandra | Wesleyan College, Bankura. |
| 103 | Bandyopadhyay, Nilratan | Scottish Churches College. |
| | Bhattacharyya, Pratapchandra | Chittagong College |
| | Gupta, Narmadakumar | Non-Collegiate Student, Roll Cal. N 101 |
| | Sarkar, Annadaprasad | K. N. College, Berhampur |
| | Bandyopadhyay, Sudhiranjan | Brajamohan College, Barisal |
| | Chattopadhyay, Sureschandra | Non-Collegiate Student, Vidyasagar College, Roll Cal N. 93 |
| | Chaudhuri, Susilkumar | Chittagong College. |
| | De, Santoshkumar | City College, Calcutta. |
| 107 | Lala, Hemantakumar | St Xavier's College. |
| | M. Abdul Jalil | Non-Collegiate Student, Presidency College, Roll Cal. N. 219. |
| | Majumdar, Bidhuranjan | Cooch-Bihar Victoria College. |
| | Misra, Nalinaksha | Non-Collegiate Student, Vidyasagar College, Roll Cal. N. 92. |
| | Syed Abdul Ali | K. N College, Berhampur. |

SANSKRIT.

*Class I.*

| | | |
|---|---|---|
| 1 | Chakrabarti, Chintaharan | City College, Calcutta. |
| 2 | Chaudhuri, Narendranath | Rajshahi College. |
| 3 | Chakrabarti, Harendrakumar | Sanskrit College. |
| 4 | Bhattacharyya, Kalipada | Rajshahi College. |

| | | |
|---|---|---|
| 5 | Sarma, Umakanta | Cotton College, Gauhati |
| 6 | " Tulsinarayan | Ditto |
| 7 | Bhattacharyya, Dhirendranath | Sanskrit College. |
| | " Narendranath | M. C College, Sylhet. |
| 9 | Lahiri, Prabodhchandra | Sanskrit College. |
| 10 | Chattopadhyay, Durgacharan | Non-Collegiate Student, Wesleyan College, Bankura, Roll Bank N 2 |
| | Datta, Kunjalal | M C. College, Sylhet |
| 12 | Bandyopadhyay, Nandadulal | Sanskrit College. |
| 13 | Niyogi, Surendraprasad | Rajshahi College. |
| 14 | Das, Kalicharan | Non-Collegiate Student, Cotton College, Gauhati, Roll Gau N 4 |
| 15 | Dasgupta, Khitischandra | Vidyasagar College. |
| 16 | Bhattacharyya, Gopalkrishna | Non-Collegiate Student, Roll Coo N. 2 |
| | Thakur, Pratipchandra | Rajshahi College. |

*Class II.*

| | | |
|---|---|---|
| 1 | Ray, Bipraprasad | Non-Collegiate Student, City College, Calcutta, Roll Cal N. 209. |
| 2 | Raychaudhuri, Sisirkumar | City College, Calcutta |
| 3 | Sengupta, Kalipada | Wesleyan College, Bankura |
| 4 | Bhattacharyya, Asutosh | Non-Collegiate Student, Sanskrit College, Roll Cal N 26 |
| 5 | Dasghosh, Chandicharan | Vidyasagar College |
| 6 | Chattopadhyay, Nisakanta | Sanskrit College |
| 7 | " Satyakinkar | Ditto |
| 8 | Bhattacharyya, Purushottam | Vidyasagar College. |
| 9 | Chattopadhyay, Sailendranath | Sanskrit College |
| 10 | Bandyopadhyay, Paresnath | Hughli College |

PALI

*Class II.*

| | | |
|---|---|---|
| 1 | Baruya, Munindralal | Chittagong College |
| 2 | " Dinendrakumar | Ripon College. |
| 3 | " Premananda | Scottish Churches College |
| 4 | " Tejendralal | Chittagong College. |

ARABIC

*Class II*

| | | |
|---|---|---|
| 1 | Mir Feda Ali | Non-Collegiate Student, Roll Dac N 19 |
| 2 | Siddique Ullah | Ripon College |
| 3 | Saad Abul Hossain | Rajshahi College |
| 4 | Aziz Ullah | Bangabasi College |
| 5 | Muslim Miah | Non-Collegiate Student, Roll Dac N. 18 |
| 6 | Sardar Mahammad Dianatulla | Rajshahi College. |

PERSIAN

*Class II.*

| | | |
|---|---|---|
| 1 | Syed Mohbubus Sobhan | Presidency College |

PHILOSOPHY

*Class I*

| | | |
|---|---|---|
| 1 | Bhattacharyya, Aghoranath | Cotton College, Gauhati. |
| 2 | Sengupta, Nagendranath | St Paul's College. |
| 3 | Sarma, Praphullakumar | Cotton College, Gauhati. |
| 4 | Das, Nirmalacharan | Presidency College. |

*Class II*

| | | |
|---|---|---|
| 1 | Ghosh, Ghanasyam | Scottish Churches College |
| 2 | Bakai, Bireswarprasad | Cooch-Bihar Victoria College |
| | Mukhopadhyay, Rabindranath | Presidency College. |
| | Sanyal, Sudhirchandra | Ditto. |
| 5 | Bandyopadhay, Nalinchandra | South Suburban College, Bhowanipur |
| 6 | Raychaudhuri, Narendralal | St Paul's College. |
| 7 | Sinha, Sibchandra | Presidency College |
| 8 | Sengupta, Jitendranath | Cooch-Bihar Victoria College. |
| 9 | Kar, Jatindramohan | Rajshahi College |
| 10 | Sinha, Khagendranath | K N College Berhampur |
| 11 | Kalita, Mohanchandra | Non-Collegiate Student, Cotton College, Gauhati, Roll Gau N 1 |
| 12 | Bandyopadhyay, Narendrachandra | Rajshahi College. |
| 13 | Sarbajna, Rohinikumar | South Suburban College, Bhowanipur. |
| 14 | Lahiri, Nirendranath | Scottish Churches College. |

| | | |
|---|---|---|
| 15 | Sarkar, Jnanendrakumar | Brajamohan College, Barisal. |
| 16 | Syed Molazem Ali | Presidency College. |
| 17 | Poddar, Kshetramohan | City College, Calcutta |
| 18 | Sarkar, Tejendrakumar | Non-Collegiate Student, South Suburban College, Bhowanipur, Roll Cal. N. 250 |
| 19 | Mukhopadhyay, Binaykrishna | Scottish Churches College. |
| 20 | Chattopadhyay, Nagendranath | Cooch-Bihar Victoria College |
| 21 | Bandyopadhyay, Ramchandra | City College, Calcutta |
| 22 | Ghosh, Dhirendranath | Scottish Churches College |
| 23 | Kar, Pareschandra | City College, Calcutta |
| 24 | Pramanik, Rajpada | K. N College, Berhampur |
| 25 | Basu, Sailendranath | City College, Calcutta |

HISTORY

*Class I*

| | | |
|---|---|---|
| 1 | Bhattacharyya, Bimalkumar | K N. College, Berhampur. |
| 2 | Syeda Khower Sultan Muwayyidzada | Diocesan College Non-Collegiate Student, Roll Cal F. N 3. |
| 3 | Ray, Nareschandra | Scottish Churches College |
| 4 | Bandyopadhyay, Sarojnath | Presidency College. |
| 5 | " Surendranath | Ditto |

*Class II*

| | | |
|---|---|---|
| 1 | Gupta, Dakshinaranjan | Non-Collegiate Student, Presidency College Roll Cal N 225 |
| 2 | Ghosh, Bikaschandra | Presidency College |
| 3 | Mitra, Biva | Diocesan College Non-Collegiate Student, Roll Cal. F N. 2 |
| 4 | Mukhopadhyay, Niharranjan | Scottish Churches College |
| 5 | Saha, Girindranath | Rajshahi College. |
| 6 | Bandyopadhyay, Chintaharan | Scottish Churches College |
| 7 | De, Amulyadhan | Ditto |
| 8 | Chakrabarti, Sudhindranath | Ditto |
| 9 | Pal, Satyacharan | Ditto |
| 10 | Chakrabarti, Sasadhar | Rajshahi College |
| 11 | Chaudhuri, Kalicharan | K N College, Berhampur. |
| 12 | " Jatindranath | Scottish Churches College |

ECONOMICS

*Class I*

| | | |
|---|---|---|
| 1 | Basu, Pabitrakumar | Presidency College |
| 2 | Gangopadhyay, Birendranath | Ditto |
| 3 | Datta, Sibchandra | Ditto |
| 4 | Mohammad Abdur Rouf | Ditto |
| 5 | Sen, Dhirendranath | Ditto |
| | " Khagendranath | Ditto. |

*Class II*

| | | |
|---|---|---|
| 1 | L. A. Natesan | Scottish Churches College |
| 2 | Ghosh, Haricharan | Presidency College. |
| 3 | Lahiri, Saktipada | Scottish Churches College |
| 4 | Sen, Binodlal | Presidency College |
| 5 | Mukhopadhyay, Debaprasanna | Ditto. |
| 6 | Ghosh, Debaprasad | Ditto. |
| 7 | Mallik, Hiranchandra | Ditto |
| 8 | Biswas, Hirendralal | Ditto |
| 9 | Chattopadhyay, Prabhaschandra | Ditto |
| 10 | Sinha, Marindramohan | St. Paul's College |
| 11 | Lahiri, Amalendunath | Presidency College |
| 12 | Chanda, Satischandra | Scottish Churches College. |
| | Das, Jagatbandhu | Ditto. |
| 14 | Bhattacharyya, Praphullakumar | Ditto. |
| | Chattopadhyay, Benimadhab | Ditto |
| | Ghosh, Manomohan | Ditto |
| 17 | Bhattacharyya, Gopeschandra | Cotton College, Gauhati. |
| 18 | Bandyopadhyay, Kalipada | Scottish Churches College |
| | Basu, Probodhkanta | St. Paul's College. |
| 20 | Niyogi, Kshitischandra | Scottish Churches College. |
| 21 | Sanyal, Subodhnath | Non-Collegiate Student, Scottish Churches College, Roll Cal. N. 110. |
| 22 | Ray, Dyutischandra | Presidency College. |
| 23 | De, Jagadananda | Ditto. |
| 24 | Das, Prabodhchandra | Cotton College, Gauhati. |
| 25 | Ghosh, Ratanlal | Presidency College |
| 26 | Bandyopadhya, Satyendrakesari | Scottish Churches College. |
| 27 | Basu, Bhupendranath | Presidency College. |
| 28 | Sengupta, Sushama | Non-Collegiate Student, Roll Dac. F. N. 1. |
| 29 | Barma, Purandar | Cotton College, Gauhati |
| 30 | Sarkar, Sudhirkumar | Scottish Churches College. |
| 31 | Ray, Pramathes | Ditto. |

| | | | |
|---|---|---|---|
| 32 | Chaudhuri, Phanibhusan | ... | Scottish Churches College |
| | Gangopadhyay, Sudhirchandra | ... | Ditto. |
| | Mohammed Fazlul Karim | .. | Non-Collegiate Student, Presidency College, Roll Cal N 226 |
| 35 | Muhammad Amin | ... | St Paul's College |
| 36 | Som, Niradlal | ... | Scottish Churches College. |
| 37 | Ray, Subodhchandra | ... | Ditto |
| 38 | Baruya, Jagannath | ... | Cotton College, Gauhati |
| 39 | Sarma, Sitaram | ... | Ditto |
| 40 | Dutt, Arunkant | ... | Non-Collegiate Student, Scottish Churches College, Roll Cal. N. 112 |
| 41 | Raha, Amalkumar | .. | Presidency College. |
| 42 | Ghosh, Sudhansubhushan | ... | Scottish Churches College. |
| | Mundle, Anil K. | ... | Ditto. |

MATHEMATICS

*Class I.*

| | | | |
|---|---|---|---|
| 1 | Dattagupta, Sachindrakumar | ... | Presidency College |
| 2 | Sanyal, Sudhindrakumar | .. | Ditto |
| 3 | Goswami, Kshitindrakisor | . | Scottish Churches College |
| 4 | Mallik, Kartikchandra | ... | Ditto. |
| 5 | Ghosh, Haricharan | .. | Presidency College |
| 6 | Ray, Hiralal | .. | City College, Calcutta. |
| 7 | Ray, Manmathanath | . | Presidency College |

*Class II.*

| | | |
|---|---|---|
| 1 | Mukhopadhyay, Niranjan | Presidency College |
| 2 | Gupta, Hemendranath | Non Collegiate Student, Presidency College, Roll Cal N 227 |
| 3 | Chakrabarti, Harasundar | M C College, Sylhet |
| 4 | Sengupta, Sailendrachandra | City College Calcutta |
| 5 | Chattopadhyay, Ramchandra | Scottish Churches College |
| 6 | Chaudhuri, Debendranath | K N College, Berhampur |
| 7 | Mukhopadhyay, Manindranath | City College, Calcutta |

PASSED WITH DISTINCTION

(In alphabetical order)

| | | |
|---|---|---|
| | Abdul Ahad Chaudhuri | M C College, Sylhet |
| | Abdul Bari | Non-Collegiate Student, Roll Mym N 1 |
| | Abdul Hai | Chittagong College |
| | Abdul Majid Mia | Comilla Victoria College |
| | Abraham, Manik | Serampore College |
| | Acharyya, Dwijendranath | Sanskrit College |
| | Ahammed Hossain | Ripon College |
| | Altaf Ahmed | Cotton College, Gauhati |
| | Ayub Ali | Presidency College |
| 10 | Aziz Ahmad | Ripon College |
| | Azizur Rahman | Comilla Victoria College |
| | Bagchi, Chandramadhab | South Suburban College, Bhowanipur |
| | " Kumudbandhu | Krishnagar College, Roll Kri N 1 |
| | " Kumudranjan | Vidyasagar College |
| | " Sudhansubimal | Non-Collegiate Student, City College, Calcutta Roll Cal N 171. |
| | Bairagi, Satischandra | Serampore College |
| | Bandyopadhyay, Amarendranath | Wesleyan College, Bankura, Roll Bank N. 4 |
| | Bandyanath | Scottish Churches College |
| | Bholanath | Vidyasagar College |
| 20 | " Binaykrishna | City College, Calcutta. |
| | Debendranath | Ditto. |
| | Jatindranath | Hindu Academy, Daulatpur |
| | Nityaranjan | Presidency College |
| | Phanibhushan | Sanskrit College. |
| | Banik, Surendramohan | City College, Calcutta |
| | Basak, Dhirendranath | Scottish Churches College |
| | " Susilkrishna | Ditto. |
| | Basu, Brajendranath | Vidyasagar College. |
| | " Harashitchandra | Hindu Academy, Daulatpur |
| 30 | " Lalitmohan | Ditto. |
| | " Patitpaban | South Suburban College, Bhowanipur |
| | " Sisirkumar | Scottish Churches College |
| | " Sitischandra | Serampore College |
| | " Sridab | Hughli College. |
| | " Suhasini | Bethune College, Non-Collegiate Student, Roll Cal F N 7 |
| | " Susilkumar | Bangabasi College. |
| | " Sudhirkumar | City College, Calcutta |
| | " Syamapada | Brajamohan College, Barisal |
| | Basuraychaudhuri, Amulyakrishna | Scottish Churches College |
| 40 | Basuarbadhikari, Birendranath | K N. College, Berhampur, Roll Ber. N. 5. |
| | Bebanaw, K T. | St. Paul's College. |

| | | |
|---|---|---|
| | Bera, Gobindaprasad | K. N. College, Berhampur. |
| | „ Jitendranath | Serampore College. |
| | Bhaduri, Srischandra | Rajshahi College (Non-Collegiate Student). |
| | Bhagirath Prasad | St Paul's College. |
| | Bhagwatiprasad Singh | Non-Collegiate Student, City College, Calcutta, Roll Cal N. 205. |
| | Bhattacharyya, Asutosh | A. M College, Mymensingh |
| | „ Dineschandra | M. C College, Sylhet. |
| | „ Dwarkanath | Hindu Academy, Daulatpur |
| 50 | „ Indranarayan | K. N College, Berhampur. |
| | „ Indubhushan | Wesleyan College, Bankura |
| | „ Jagadischandra | Comilla Victoria College. |
| | „ Jatindrachandra | Rajendra College, Faridpur |
| | Nagendranath | St. Xavier's College |
| | Nareschandra | K. N College, Berhampur |
| | Pritilata | Bethune College. |
| | Sachindranath | Carmichael College, Rangpur. |
| | Sachiranjan | Non-Collegiate Student, Scottish Churches College, Roll Cal N. 123. |
| | „ Srisankar | Vidyasagar College |
| 60 | „ Sudhirmohan | K N College, Berhampur. |
| | „ Upendrachandra | M C College, Sylhet |
| | Bhaumik, Chandrasekhar | Non-Collegiate Student, Scottish Churches College, Roll Cal. N. 124. |
| | „ Girischandra | Non-Collegiate Student, Roll Cal N 32. |
| | „ Krishnachandra | Non-Collegiate Student, Roll Baul N. 1. |
| | „ Niradchandra | Rajendra College, Faridpur. |
| | Bhuyan, Rebatikanta | St. Paul's College |
| | Biswas, Bimalchandra | Comilla Victoria College |
| | „ Gaurchandra | Hindu Academy, Daulatpur |
| | „ Radharaman | Wesleyan College, Bankura |
| 70 | „ Rebatiraman | City College, Calcutta. |
| | Brahma, Sailendranath | Ripon College |
| | Brijnandan Saksena | Non-Collegiate Student, Roll Cal N 234. |
| | Chakrabarti, Amulyachandra | City College, Calcutta |
| | „ Amulyachandra | K N. College, Berhampur |
| | „ Anangamohan | Brajamohan College, Barisal |
| | „ Atulchandra | Non Collegiate Student, Roll Dac N 7 |
| | „ Bhupendranarayan | K N College, Berhampur. |
| | Binodbihari | City College, Calcutta |
| | Birendrachandra | Victoria College, Cooch-Behar |
| 80 | „ Hemantakumar | Comilla Victoria College |
| | Herambanath | Non-Collegiate Student, Roll Dac N. 1 |
| | Jnanendramohan | Bangabasi College. |
| | Jogeschandra | Brajamohan College, Barisal |
| | Kamalakanta | K N. College, Berhampur |
| | „ Karuna | Bethune College. |
| | „ Madhusudan | Comilla Victoria College. |
| | „ Mahendrakumar | Ditto |
| | „ Monoranjan | M C. College, Sylhet. |
| | „ Nagendranath | Bangabasi College |
| 90 | „ Pareschandra | K. N College, Berhampur. |
| | „ Pramadanath | Vidyasagar College |
| | „ Pramathachandra | Cooch-Behar Victoria College. |
| | „ Rajendranath | Brajamohan College Barisal |
| | „ Ramanimohan | M. C. College, Sylhet |
| | „ Satyendranath | Presidency College |
| | „ Sisirkumar | Dacca College |
| | „ Srinibaschandra | Carmichael College, Rangpur. |
| | Chanda Sailendranath | Ditto. |
| | „ Saratchandra | M C College, Sylhet |
| 100 | Chattopadhyay, Arabinda | Vidyasagar College. |
| | „ Bhujangabhushan | K N. College, Berhampur |
| | „ Gaurisankar | Presidency College |
| | „ Hirendranath | South Suburban College, Bhowanipur. |
| | „ Hrishikes | Hughli College |
| | „ Manomohan | Brajamohan College, Barisal |
| | „ Nirmalchandra | K. N College, Berhampur. |
| | „ Panchkari | Non-Collegiate Student, Roll Cal. N 6. |
| | „ Pasupati | Non-Collegiate Student, City College, Calcutta, Roll Cal. N 202. |
| | „ Praphullakumar | Rajendra College. Faridpur. |
| 110 | „ Sasankasekhar | Wesleyan College, Bankura. |
| | „ Sudhirkumar | City College, Calcutta |
| | „ Syamadas | Carmichael College, Rangpur. |
| | Chaudhuri, Nisikanta | Scottish Churches College. |
| | China, Khagendranath | Ripon College. |
| | C. Ramachandra Rao | Non-Collegiate Student, Roll Cal. N. 35 |
| | C. S. Kunjunathan | Serampore College. |
| | Das, Adwaitacharan | Ripon College. |
| | „ Bhagyabati | Diocesan College |
| | „ Chandrasekhar | Non-Collegiate Student, City College, Calcutta, Roll Cal. N. 175. |

| | | |
|---|---|---|
| 129 | Das, Haramohan | Scottish Churches College |
| | Hemantakumar | K N. College, Berhampur |
| | Matilal | Hindu Academy, Daulatpur. |
| | Narsinha | Presidency College |
| | Nibaranchandra | Carmichael College, Rangpur. |
| | Radhacharan | Hindu Academy, Daulatpur |
| | Rajendranath | Non-Collegiate Student, Roll Cal N 38. |
| | Saradakumar | Comilla Victoria College |
| | Ushakumar | Cooch-Behar Victoria College |
| | Dasgupta, Bijaykrishna | Bangabasi College. |
| 130 | " Jogeschandra | Rajendra College, Faridpur |
| | " Lila | Diocesan College |
| | " Siboswar | Carmichael College, Rangpur. |
| | " Subodhchandra | Scottish Churches College, Calcutta |
| | Daspurkayastha, Binodbihari | M C College, Sylhet |
| | Debpurkayastha, Binodechandra | Ditto |
| | Datta, Chandrasekhar | Non-Collegiate Student, Roll Cal N 37. |
| | " Dharanidhar | Scottish Churches College. |
| | " Harindranath | Ditto |
| | " Jaychand | Wesleyan College, Bankura |
| 140 | " Kanailal | South Suburban College, Bhowanipur |
| | " Manikial | Ripon College |
| | " Nandamohan | M C College, Sylhet |
| | " Pramathanath | K N College, Berhampur. |
| | " Sailendranath | Vidyasagar College, Calcutta. |
| | " Srimanchandra | Wesleyan College, Bankura |
| | " Sudhansukumar | Scottish Churches College. |
| | De, Baradaranjan | Chittagong College |
| | " Khagendrachandra | Rajshahi College |
| | " Kshetramohan | Brajamohan College, Barisal |
| 150 | " Susilchandra | City College, Calcutta |
| | Deb, Siteschandra | Non Collegiate Student, M C College, Sylhet, Roll Syl N 3 |
| | Dhar, Jatindramohan | Scottish Churches College, Calcutta |
| | " Jitendralal | Vidyasagar College |
| | Dhol, Girindramohan | Rajshahi College |
| | Enamul Kabir | Presidency College |
| | Francis, M L. | Scottish Churches College |
| | Gangopadhyay, Lalbihari | South Suburban College, Bhowanipur |
| | " Makhanlal | Vidyasagar College |
| | " Nibaranchandra | Bangabasi College. |
| 160 | " Nripendranath | Ripon College. |
| | " Ramprasad | Ditto |
| | Ghosh, Amiyabhusan | Brajamohan College, Barisal |
| | " Bishnupada | City College, Calcutta |
| | " Jatindramohan | South Suburban College |
| | " Jogeschandra | Rajendra College, Faridpur |
| | " Narendranath | Non-Collegiate Student, Roll Cal N 43 |
| | " Pulinbihari | Scottish Churches College |
| | " Ramendrakrishna | K N College, Berhampur. |
| | " Rasamay | Bangabasi College. |
| 170 | " Renupada | K N College, Berhampur |
| | " Saratchandra | Wesleyan College, Bankura. |
| | " Satyaranjan | Brajamohan College, Barisal |
| | " Sudhendukumar | Ditto |
| | " Surendranath, II | South Suburban College, Bhowanipur. |
| | " Susilkrishna | Scottish Churches College |
| | Ghosal, Hridayranjan | Ripon College |
| | " Sureschandra | South Suburban College, Bhowanipur. |
| | Gopalakrishna Ananda Chandavarkar | Non Collegiate Student, Roll Cal N 2. |
| | Goswami, Dwijendrakumar | A M College, Mymensingh. |
| 180 | Guha, Jatindramohan | St Paul's College |
| | " Munindrachandra | City College, Calcutta |
| | Guhathakurta, Sudhirchandra | Non-Collegiate Student, Roll Cal. N 23. |
| | Gupta, Anantamohan | Bangabasi College |
| | " Anilkrishna | Scottish Churches College |
| | " Gaurchandra | Vidyasagar College. |
| | " Krishnacharan | Serampore College |
| | " Nanigopal | Scottish Churches College |
| | " Sailadhar | K. N. College, Berhampur |
| | " Sailendranath | Rajendra College, Faridpur |
| 190 | Hajra, Pulinbihari | City College, Calcutta. |
| | Hanumantha Krishnamti | Vidyasagar College |
| | Jajwary, Chaitanyanath | Non-Collegiate Student, City College, Calcutta, Roll Cal. N 183 |
| | Jana, Sachipati | City College, Calcutta |
| | " Sripatikanta | Ditto |
| | Jha, Vishwanath | Ditto. |
| | Kar, Jitendrakumar | Rajendra College, Faridpur, Roll Far. N. 4 |
| | " Kaliprasanna | Non-Collegiate Student, City College, Calcutta, Roll Cal N 198 |
| | Khan, Sudhirchandra | Scottish Churches College |

| | | |
|---|---|---|
| | Kota Narayana Murti | Non-Collegiate Student, Roll Cal. N. 41. |
| 200 | Kundu, Dhirendranath | Non-Collegiate Student, City College, Calcutta, Roll Cal. N. 189. |
| | Lala, Sudhansubimal | Chittagong College |
| | Lyons, Henry Herbert | Non-Collegiate Student, Roll Cal N. 4. |
| | Maiti, Batakrishna | Vidyasagar College. |
| | Majumdar, Bhabanath | Brajamohan College, Barisal. |
| | " Dhirendranath | Scottish Churches College. |
| | " Mrinalkanti | South Suburban College, Bhowanipur. |
| | " Nityagopal | City College, Calcutta |
| | " Phakirchandra | Vidyasagar College |
| | Mandal, Biswaranjan | Krishnagar College. |
| 210 | " Jagatbandhu | K. N. College, Berhampur. |
| | " Kalikanta | Brajamohan College, Barisal. |
| | " Pulinbihari | Non-Collegiate Student, Scottish Churches, College Roll Cal. N. 128. |
| | Misra, Hridaybhushan | K N College, Berhampur. |
| | Mitra, Dhirendranath | St Paul's College. |
| | " Jatindranath | South Suburban College, Bhowanipur. |
| | " Jatindranath | Carmichael College, Rangpur. |
| | " Phanindramohan | Rajshahi College (Non-Collegiate Student) |
| | " Satischandra | Non-Collegiate Student, Roll. Cal. N. 100. |
| | Mazamali Miah | Carmichael College, Rangpur |
| 220 | Md Abdul Karim | Ditto |
| | Md. Akbarali | A M College, Mymensingh |
| | Md Messeruddin | Carmichael College, Rangpur. |
| | Mohammad Abdul Hamid | St Xavier's College. |
| | Mohammad Hashmatullah Shah | Rajshahi College. |
| | Muhammad Ibrahim | St. Xavier's College |
| | Muhammad Mohiuddin Ahmed | Hughli College. |
| | Mohd Mahmood Ahsan | Non-Collegiate Student, City College, Calcutta, Roll Cal. N. 194 |
| | Mukhopadhyay, Asutosh | Rajendra College, Faridpur |
| | " Asutosh | Comilla Victoria College |
| 230 | " Atulbihari | Scottish Churches College |
| | " Chandrakumar | Non-Collegiate Student, Scottish Churches College, Roll Cal. N. 116. |
| | " Dwijendralal | St Paul's College |
| | " Jatindranath | Scottish Churches College |
| | " Kalipada, I | Bangabasi College. |
| | " Kalipada, II | Ditto |
| | " Manoranjan | K. N. College, Berhampur. |
| | " Pradyotkumar | Ditto |
| | " Prakaschandra | Serampore College. |
| | " Ramchandra | Presidency College. |
| 240 | " Ramchandra | Bangabasi College |
| | " Ramchandra | Scottish Churches College. |
| | " Satkari | Vidyasagar College |
| | Nag, Kaminikumar | M. C. College, Sylhet. |
| | Nandi, Haripada | Wesleyan College, Bankura. |
| | " Jitendrakrishna | Hindu Academy, Daulatpur |
| | Nath, Bipinchandra | Comilla Victoria College. |
| | Nazibor Rahaman | Chittagong College. |
| | Nezamat Ali Khan | Non-Collegiate Student, Ripon College, Roll Cal N 156 |
| | Niyogi, Dakshinaranjan | Comilla Victoria College. |
| 250 | " Debendranath | Serampore College. |
| | Pal, Bimalendu | K N. College, Berhampur |
| | " Brajendrachandra | Non-Collegiate Student, Roll Dac. N. 22. |
| | " Orambapada | K. N College, Berhampur. |
| | " Ramsasi | Hughli College |
| | " Rukminikanta | City College, Calcutta. |
| | " Sureschandra | Ripon College |
| | " Upendranath | Rajshahi College. |
| | Palakodety Venkatrama Sharma | Non-Collegiate Student, Roll Cal. N. 34. |
| | Panda, Asutosh | St. Paul's College. |
| 260 | " Pitambar | Rajshahi College. |
| | Pande, Debanandan | A M. College, Mymensingh. |
| | Pramanik, Srischandra | South Suburban College, Bhowanipur. |
| | Price, C A | Non-Collegiate Student, Roll Cal. N. 38. |
| | Raj Bahadur Saksena | Non-Collegiate Student, Roll. Cal. N. 243. |
| | Rajendraprasad | St. Paul's College. |
| | Rakshit, Ramanimohan | Comilla Victoria College. |
| | Ray, Bhujendranarayan | Vidyasagar College. |
| | " Dharmadas | K. N College, Berhampur. |
| | Dineschandra | Ditto |
| 270 | " Gaurgobinda | City College, Calcutta |
| | Kalipada | M. C College, Sylhet |
| | Kurukshetra | Hindu Academy, Daulatpur. |
| | Matilal | Rajshahi College. |
| | Nalinranjan | Scottish Churches College. |
| | Paresnath, II | City College, Calcutta. |

| | | |
|---|---|---|
| | Ray, Prabhatchandra | ... Scottish Churches College. |
| | " Pramathachandra | ... A. M. College, Mymensingh |
| | " Rasbihari | ... Scottish Churches College. |
| | " Saileswar | ... Non-Collegiate Student, Carmichael College, Rangpur, Roll Rang N. 7. |
| 280 | " Sanatkumar | ... M C College, Sylhet. |
| | " Taranikanta | ... Comilla Victoria College |
| | Raychaudhuri, Binayendranath | ... Non-Collegiate Student, Presidency College, Roll Cal N. 233. |
| | " Jaharilal | ... Hindu Academy, Daulatpur. |
| | " Nirmalchandra | ... K N College, Berhampur. |
| | " Rabindranath | ... Comilla Victoria College. |
| | " Sailendrakumar | ... Scottish Churches College |
| | Saha, Gokulchandra | ... City College, Calcutta. |
| | " Jitendranath | .. Scottish Churches College |
| | " Pyarimohan | ... Comilla Victoria College. |
| 290 | " Radhacharan | ... Carmichael College, Rangpur |
| | Sahai, Jitendranandan | ... City College, Calcutta. |
| | Sahamandal, Digindralal | ... Vidyasagar College |
| | Sandel, Praphullakusum | ... St. Xavier's College |
| | Sanyal, Debendranath | ... Non Collegiate Student, Scottish Churches College, Roll Cal N 108. |
| | " Jitendranath | ... Cooch-Behar Victoria College |
| | " Susilchandra | ... City College, Calcutta |
| | Sarbajna, Bimalakanta | Non Collegiate Student, Roll Dau N 1 |
| | Sarkar, Amalkumar | .. Scottish Churches College |
| | " Amarnath | .. City College, Calcutta |
| 300 | " Batakrishna | ... Scottish Churches College |
| | " Bibhutibhushan | .. Presidency College |
| | " Debendralal | .. A M College, Mymensingh |
| | " Debendranath | ... Vidyasagar College |
| | " Dhirendranath | ... Scottish Churches College |
| | " Harasundar | ... City College, Calcutta |
| | " Makhanchandra | .. Rajshahi College |
| | " Nirmalchandra | .. Ripon College |
| | " Radhapada | ... Non-Collegiate Student, Roll Ber N. 2 |
| | Sarma, Bankimchandra | M C College, Sylhet |
| 310 | Sen, Dwijendrakumar | . A M College, Mymensingh |
| | " Jitendranath | ... K N College, Berhampur. |
| | Sengupta, Baridbaran | .. Ditto |
| | " Nisikanta | . Ditto |
| | " Saileschandra | . M C College, Sylhet |
| | " Sudhansukumar | Rajendra College, Faridpur |
| | Shukla, Gajanan | ... Scottish Churches College |
| | Sil, Binaykrishna | ... Hughli College |
| | " Rameschandra | ... Ditto |
| | Sinha, Nalniranjan | ... Wesleyan College, Bankura |
| 320 | " Rajkumar | ... K N College, Berhampur |
| | " Rasamay | .. Non-Collegiate Student, K. N College, Berhampur, Roll Ber. N. 11 |
| | Sinharay, Pulinbihari | ... Serampore College. |
| | Stephens, Stephen Runtyn | ... Non-Collegiate Student, Roll Cal. N 1 |
| | Sural, Prabodhchandra | ... Wesleyan College, Bankura. |
| | Syed Abdus Shakoor | ... St Xavier's College. |
| | Syed Aftabuddin Ahmad | ... Presidency College. |
| | Syed Amjad Hossain | ... St. Xavier's College |
| | Tekumalla Appalanarasayya | ... Non-Collegiate Student, Roll Cal. N 83 |
| | V. P Sankaran Nair | ... Non-Collegiate Student, Roll Cal N. 12. |
| 330 | Venkhachalam S K. | ... Non-Collegiate Student, Roll Cal. N 42. |

PASS LIST.

(In alphabetical order)

| | | |
|---|---|---|
| | Abbas Reza | ... St Xavier's College. |
| | Abdul Awal | ... Chittagong College. |
| | Abdul Gafur | ... Ripon College |
| | Abdul Gafur Kam | ... Comilla Victoria College |
| | Abdul Gaffar | ... Wesleyan College, Bankura. |
| | Abdul Gani | ... Comilla Victoria College |
| | Abdul Hai | ... Non-Collegiate Student, Roll Com N 1 |
| | Abdul Hakim | ... K N College, Berhampur |
| | Abdul Haque Bhuyan | ... A M College, Mymensingh. |
| 10 | Abdul Hoque | ... Comilla Victoria College |
| | Abdul Kader | ... St Xavier's College |
| | Abdul Kaddus Choudhury | ... M. C. College, Sylhet. |
| | Abdul Karim | ... Non-Collegiate Student, Roll Cal N 245 |
| | Abdul Karim | ... Victoria College, Comilla, Roll Com. № 16. |
| | Abdul Majid | ... K. N. College, Berhampur |
| | Abdul Majid Ahmed | ... Cooch-Behar Victoria College |
| | Abdul Majid Khan | ... Non-Collegiate Student, Roll Cal N, 191 (City College). |
| | Abdul Malik | ... Ripon College |
| | Abdul Motlib | ... Cotton College, Gauhati |

| | | |
|---|---|---|
| 20 | Abdul Wadud | Non-collegiate student, Roll Cal. N 137 (St Xavier's College). |
| | Abdul Wajed | Ripon College. |
| | Abdur Rashid | M. C. College, Sylhet. |
| | Abdus Samad Ahmed | Rajshahi College. |
| | Abdus Satter | Victoria College, Comilla. |
| | Abraham, M. | St. Paul's College. |
| | " P. P. | Serampore College (Roll Ser. N 1). |
| | " V. T | Non-collegiate student, Roll Cal N 129 (S. C College). |
| | Abul Fattah Rafiuddin Ahmed | City College, Calcutta |
| | Abul Fazle Md Idris | Rajshahi College. (Non-Collegiate student). |
| 30 | Abul Hasan | Presidency College. |
| | Abul Hashen Munshi | Rajshahi College |
| | Abul Hayat | Bangabasi College. |
| | Abul Khair Md Anisuzzaman Khan | Rajshahi College |
| | Abul Quasem* | Chittagong College |
| | Acharyya, Atulchandra | Sanskrit College |
| | Atulab | K. N College, Berhampur |
| | Hariprasad | Krishnagar College. |
| | Jogendranath | Rajshahi College. |
| | Radhakaraman | Vidyasagor College |
| 40 | " Rameschandra | City College, Calcutta |
| | Rameschandra | M C. College, Sylhet. |
| | Sureschandra | Ditto |
| | Acharyyachaudhuri, Bhupendrakisor | St. Paul's College. |
| | Acharyyadikshit, Parthamani | Presidency College |
| | Adhikari, Gaurgopal | Rajshahi College |
| | " Premshankor | Non-collegiate student, Roll Cal N 199 (City College, Calcutta). |
| | " Saratchandra | South Suburban College, Bhowanipur |
| | " Thandaram | City College, Calcutta. |
| | Aditya, Manindranath | Ditto |
| 50 | Afsaruddin Mean | Carmichael College, Rangpur (Roll Rang N 11) |
| | Ahmed Shah | Cotton College, Gauhati. |
| | Ahmed Sayid Ali | Krishnagar College. |
| | Ahsanazzaman | Victoria College, Comilla. |
| | Akhileswari Prasad Sinha | St Paul's College |
| | Akhtor Zoman | A M. College, Mymensingh |
| | Ali Ashraf Khan | Rajshahi College. |
| | Ali Roza Khorasanee | St Xaviers College. |
| | Alley, Prabodh R | St. Paul's College. |
| | Ambika Datta Jha | Sanskrit College. |
| 60 | Amiruddin Ahmed | Ripon College. |
| | Anantram Tandon | Scottish Churches' College. |
| | Anwaral Huque | K. N College, Berhampur. |
| | Asaddar Ali | M C. College, Sylhet |
| | Ash, Bhupendranath | Scottish Churches College. |
| | Ashrafali Chowdhury | Non-collegiate student, Roll Cal N 193 (City College, Calcutta) |
| | Ashraf Uddin | Victoria College, Comilla. |
| | Ashrafali Chowdhury | Rajshahi College. |
| | Atchanta Satyanarayana | Non-collegiate student, Roll Cal N 36 |
| | Azimuddin Ahmed | Rajshahi College (Non-Collegiate student) |
| 70 | Azizar Rahman Talukder | Ripon College. |
| | Bag, Abhibhushan | Vidyasagor College |
| | " Jogendranath | City College, Calcutta. |
| | Bagchi, Abinashchandra | Ditto. |
| | Amarendranarayan | St. Paul's College. |
| | Anantakumar | K. N. College, Berhampur |
| | Dhirendranath | Ripon College. |
| | Hemendramohan | Rajshahi College. |
| | Manojeswar | Vidyasagor College. |
| | Sudhirchandra | Carmichael College, Rangpur. |
| 80 | " Umapada | Ditto. |
| | Bakshi Brajakishore Sinha | Non-collegiate student, Roll Cal. N 82. |
| | Bala Narayanchandra | Scottish Churches' College. |
| | Bandyopadhyay, Achyutamohan | Rajshahi College. |
| | Aptkumar | Scottish Churches' College. |
| | Balaichandra | Non-collegiate student, Roll Hug N 1. |
| | Barendranath | Ripon College |
| | Bibhubhushan | Brajamohan College, Barisal. |
| | Bibhutibhushan | South Suburban College, Bhowanipur. |
| | Bijaychandra | Vidyasagar College. |
| 90 | " Bijaykumar | Brajamohan College, Barisal. |
| | Bisweswar | Ditto |
| | Dulalchandra | South Suburban College, Bhowanipur. |
| | Gurupada | K. N. College, Berhampur. |
| | Harendranath | B. M College, Barisal (Roll Bar. N 16) |
| | Harilal | Ripon College. |

*Ex-student, Chittagong College.

| | | |
|---|---|---|
| | Bandyopadhyay Jagadananda | Vidyasagar College |
| | " Jibankrishna | Ripon College. |
| | " Jitendrakumar | Bangabasi College |
| | " Jitendranath | Ripon College |
| 100 | " Jogeschandra | Rajendra College, Faridpur |
| | Jyotikrishna | Vidyasagor College. |
| | Kalicharan | Bangabasi College |
| | Kalidas | Ripon College |
| | Kantikumar | Ditto. |
| | Kisorimohan | Rajendra College, Faridpur. |
| | Krishnachandra | A M. College, Mymensingh. |
| | Mahadebchandra | Ripon College |
| | Manikbhushan | Scottish Churches College |
| | Manoranjan | City College, Calcutta |
| 110 | Mrityunjay | Vidyasagor College |
| | Murarimohan | Serampore College |
| | Nalinimohan | Brajamohan College, Barisal |
| | Nirmalprasad | South Suburban College, Bhowanipur |
| | Panchanan | Ripon College |
| | Pasupati | Vidyasagor College |
| | Sachindramohan | Hughli College. |
| | Sankardas | Vidyasagor College |
| | Santibhushan | Ripon College |
| | Sarojsobhan | Vidyasagor College. |
| 120 | Sibranjan | Ditto. |
| | Sudhansubhushan | Hindu Academy, Daulatpur |
| | Sudhansukumar | Scottish Churches College |
| | Sudhendunath | Carmichael College, Rangpur |
| | Sudhirchandra | Brajamohan College, Barisal. |
| | Sureshchandra | Victoria College, Comilla |
| | Tarakmohan | Serampore College. |
| | Tarapada | St Xavier's College |
| | Upendranath | Scottish Churches College |
| | Banik, Srimbas | South Suburban College, Bhowanipur |
| 130 | Bar, Anukulchandra | Sanskrit College |
| | Barari, Durgakumar | Brajamohan College, Barisal |
| | Bardhan, Sachindrakumar | Ripon College |
| | Barkataki, Munikanta | Non-Collegiate student, Roll Cal N 104 (St. Paul's College) |
| | Baru, Binaybhushan | Serampore College. |
| | " Nandagopal | Bangabasi College. |
| | Baruya, Annadacharan | Vidyasagar College |
| | Chintaharan | Ripon College. |
| | Harendranath | Cotton College, Gauhati, (Roll Gau N 2) |
| | Hemakanta | Cotton College, Gauhati |
| 140 | Kamalakanta | Ditto |
| | Khagendralal | Vidyasagor College |
| | Kshemananda | Chittagong College |
| | Nirmalchandra | Vidyasagor College |
| | Rajendrakumod | Chittagong College |
| | Sadananda | Ditto. |
| | Basak, Nikunjabihari | Vidyasagar College |
| | " Pranbandhu | Non-Collegiate student, Roll Coo N 3 |
| | Basaratulla Mandal | Carmichael College, Rangpur |
| | Basiruddin Ahmed | Carmichael College, Rangpur, (Roll Rang N 9) |
| 150 | Basu, Adharchandra | Ripon College. |
| | " Amarendranath | City College, Calcutta |
| | " Balaram | South Suburban College, Bhowanipur |
| | " Bhupendranath | Ripon College |
| | " Bibhutibhushan | Vidyasagor College |
| | " Bibhutisekhar | Ditto. |
| | " Charuchandra | Ditto. |
| | " Haricharan | Scottish Churches College |
| | " Hemkanta | Ripon College. |
| | " Herambachandra | Rajendra College, Faridpur |
| 160 | " Jadunath | Victoria College, Cooch Behar |
| | " Jagannath | Scottish Churches College |
| | " Jatindramohan | Brajamohan College, Barisal |
| | " Khagendranath | Hindu Academy Daulatpur |
| | " Khagendranath | Non-collegiate student, Roll Cal. N 119 (Scottish Churches College). |
| | " Kiranchandra | Vidyasagar College. |
| | " Labanyaprabha | Bethune College. |
| | " Manamathanath | South Suburban College, Bhowanipur |
| | " Maniindranath | Rajshahi College. |
| | " Narayanchandra | Vidyasagar College. |
| 170 | " Narendranath | City College, Calcutta |
| | " Phanibhushan | K N College, Berhampur. |
| | " Prabhaschandra | Non-collegiate student, Roll Cal N 75 (Vidyasagar College). |
| | " Prabhatchandra | Vidyasagar College. |
| | " Pramathanath | Bangabasi College |

| | | |
|---|---|---|
| | Basu, Praphullachandra | Ripon College. |
| | " Priyanath | Ditto. |
| | " Priyanath | Victoria College, Cooch Behar. |
| | " Ramaurmohan | Brajamohan College, Barisal. |
| | " Ratinath | South Suburban College, Bhowanipur |
| 180 | " Sachindranath, I | Ditto |
| | " Sachindranath, II | Ditto |
| | " Sailendranath | Non-collegiate student, Roll Cal N 252 (Vidyasagar College) |
| | " Sanatkumar | Vidyasagar College. |
| | " Santoshkumar | St. Paul's College. |
| | " Saratchandra | Vidyasagar College. |
| | " Sarodendu | Non-collegiate student, Roll Cal N 222 (Presidency College) |
| | " Sudhansusekhar | South Suburban College, Bhowanipur. |
| | " Sudhiraj | Non-collegiate student, Roll Cal N 49 (Vidyasagar College) |
| | " Susilkumar | Brajamohan College, Barisal |
| 190 | Basumajumdar, Upendranath | Ditto. |
| | Basumallik, Rabindrachandra | Presidency College. |
| | Basuray, Bhupendranath | Brajamohan College, Barisal. |
| | Basuthakur, Sudhirkumar | Non-collegiate student, Roll Cal N 131 (Ripon College) |
| | Bera, Basantakumar | Scottish Churches College |
| | " Binodkumar | Non-collegiate student, Roll Cal N 139 (Ripon College) |
| | Bhaduri, Praphullanalin | K N College, Berhampur |
| | Bhakta, Golokbihari | Bangabasi College. |
| | Bhan, Tribhawanath | Non-collegiate student, Roll Cal N 13 |
| | Bhattacharyya, Abinaschandra | Bangabasi College |
| 200 | " Akshaykumar | Chittagong College |
| | " Amulyakumar | Scottish Churches College. |
| | " Baradakanta | South Suburban College, Bhowanipur |
| | " Basantanarayan | Bangabasi College |
| | " Bhabondranath | Victoria College, Cooch Behar. |
| | " Brajendrakumar | Carmichael College, Rangpur (Roll Rang N 1). |
| | " Debendranath | Hindu Academy, Daulatpur |
| | " Debendranath | Non collegiate student, Roll Cal N 80 |
| | " Durgaprasanna | Non-collegiate student, Roll. Cal. N.135. |
| | " Dwijendrachandra | Vidyasagar College. |
| 210 | " Haranchandra | Non-collegiate student, Roll Cal. N 195 (City College, Calcutta) |
| | " Haripada | City College, Calcutta. |
| | " Harischandra | Carmichael College, Rangpur |
| | " Himanshubimal | Chittagong College |
| | " Jnanadaprasad | Scottish Churches College. |
| | " Jnaneswar | Sanskrit College. |
| | " Jyotischandra | Rajshahi College |
| | " Kalikaranjan | K N College, Berhampur |
| | " Kesablal | Brajamohan College, Barisal |
| | " Kshitischandra | Non-collegiate student, Roll. Cal N 29 (Sanskrit College) |
| 220 | " Kshitischandra | M C. College, Sylhet |
| | " Kumudchandra | Non collegiate student, Roll Cal. N. 121 (Scottish Churches College) |
| | " Mahendralal | Chittagong College. |
| | " Manmathanath | City College, Calcutta |
| | " Manomohan | Victoria College, Comilla |
| | " Praphullakumar | Sanskrit College. |
| | " Pratulchandra | Chittagong College. |
| | " Priyanath | Ripon College. |
| | " Radhananda | Non-collegiate student, Roll Cal N 208 (City College, Calcutta). |
| | " Ramanath | Bangabasi College. |
| 230 | " Ramprakas | Ripon College. |
| | " Sasankasekhar | K. N. College, Berhampur. |
| | " Satkari | Sanskrit College |
| | " Satyaprasad | Non-collegiate student, Roll Cal N 86. |
| | " Sibendrasundar | Rajendra College, Faridpur. |
| | " Surendrachandra | Non-collegiate student, Roll Com. N 5. |
| | " Tulsicharan | Vidyasagar College |
| | " Upendrachandra | Victoria College, Comilla |
| | Bhaumik, Abaniranjan | City College, Calcutta. |
| | " Anangamohan | Victoria College, Comilla. |
| 240 | " Benimadhab | Ditto |
| | " Jagadischandra | City College, Calcutta |
| | " Kunjalal | Vidyasagar College. |
| | " Manindrachandra | A. M College, Mymensingh |
| | " Sachikanta | City College, Calcutta. |
| | " Satyendrakumar | Ditto. |
| | " Sitanath | Chittagong College. |
| | " Sureshchandra | Victoria College, Comilla Roll Com N 15). |

| | | |
|---|---|---|
| | Bhaumik, Sureschandra | ... Brajamohan College, Barisal. |
| | Bidyadhar Singh Deo | ... Ripon College. |
| 250 | Biswas, Amulyaratan | ... Non-collegiate student, Roll Cal. N 118 (Scottish Churches College). |
| | " Anathbandhu | ... City College, Calcutta. |
| | " Bibhutibhushan, I | ... Non-collegiate student, Roll Cal N 54 (Vidyasagar College). |
| | " Bibhutibhushan, II | ... Non-collegiate student, Roll Cal N 215 |
| | " Bijaykrishna | ... City College, Calcutta. |
| | " Dhirendranath | ... Vidyasagar College. |
| | " Gopalchandra | ... K N. College, Berhampur. |
| | " Jagatkisor | ... Ditto. |
| | " Jogendranath | ... Ripon College. |
| | " Krishnagopal | ... City College, Calcutta. |
| 260 | " Narayanchandra | ... Hindu Academy, Daulatpur. |
| | " Narendragopal | ... Scottish Churches College. |
| | " Nikhilnarayan* | ... Carmichael College, Rangpur. |
| | " Nityananda | ... K N. College, Berhampore |
| | " Prakaschandra | ... A. M College, Mymensingh. |
| | " Praphullanarayan | ... South Suburban College, Bhowanipur |
| | " Radhakrishna | .. Ripon College. |
| | " Samuel Phillip | ... St. Paul's College. |
| | " Saradacharan | ... Victoria College, Comilla. |
| | " Satiaranjan | .. Hindu Academy, Daulatpur |
| 270 | " Satyendrakumar | .. Scottish Churches College. |
| | " Surendramohan | .. Non-collegiate student, Roll Cal N 176 (City College, Calcutta). |
| | " Sureshchandra | .. Carmichael College, Rangpur |
| | " Upendramohan | .. City College, Calcutta |
| | " Upendranath | .. Ditto. |
| | Bose, Renuprobha | ... Bethune College. |
| | Chakrabarti, Arunendu | ... Bangabasi College. |
| | " Amulyabandhu | ... Victoria College, Comilla. |
| | " Amulyakumar | Hindu Academy, Daulatpur |
| | " Baidyanath | South Suburban College, Bhowanipur |
| 280 | " Baidyanath | Vidyasagar College |
| | " Bhupendranath | Chittagong College |
| | " Bimalchandra | Non-collegiate student, Roll Com. N 10 |
| | " Birendranath | Non-collegiate student, Roll Cal N 162 (South Suburban College, Bhowanipur) |
| | " Brajendranath | Scottish Churches College. |
| | " Byomkes | Rajshahi College |
| | " Chandramohan | A M. College, Mymensingh. |
| | " Dwijendrakumar | Rajshahi College. |
| | " Girijanath | Ditto. |
| | " Girindrakumar | Scottish Churches College. |
| 290 | " Gopalchandra | Vidyasagar College |
| | " Gopinath | Non-collegiate student, Roll Cal. N 25 |
| | " Gurupada | K N. College, Berhampur |
| | " Indranath | Hughli College |
| | " Jaminimohon | Ripon College. |
| | " Jatindrachandra | Bangabasi College. |
| | " Jnanadagobinda | K N College, Berhampur |
| | " Jogendranath | Non-collegiate student, Roll Com N 6 |
| | " Kanailal | Rajendra College, Faridpur. |
| | " Kasichandra | Bangabasi College. |
| 300 | " Kshitishchandra | Ripon College. |
| | " Kuladanath | Rajshahi College. |
| | " Mahendrachandra | Chittagong College. |
| | " Manibhushan | South Suburban College, Bhowanipur. |
| | " Manindrachandra | Non-collegiate student, Roll Cal. N 72 (Vidyasagar College) |
| | " Monoranjan | Victoria College, Cooch Behar |
| | " Nagendrachandra | Rajendra College, Faridpur. |
| | " Nagendrakisor | Non-collegiate student, Roll Cal N 52 (Vidyasagar College). |
| | " Nahinmohan | Chittagong College |
| | " Narendranath | Non collegiate student, Roll Cal. N 181 (City College, Calcutta). |
| 310 | " Nibaranchandra | Non-collegiate student, Roll Cal N 251 (Ripon College) |
| | " Nisinath | Cotton College, Gauhati. |
| | " Paritosh | Ripon College. |
| | " Pasupati | Hughli College. |
| | " Phakirchandra | K. N College, Berhampur. |
| | " Phanibhushan | City College, Calcutta. |
| | " Phanibhushan | Ripon College. |
| | " Pramadakumar | Brajamohan College, Barisal. |
| | " Pratulchandra | Cotton College, Gauhati. |
| | " Purnachandra | A. M. College, Mymensingh. |

* Ex-student, Carmichael College, Rangpur.

| | | |
|---|---|---|
| 320 | Chakrabarti, Rabindralal | Non collegiate student, Roll Cal N 56 (Vidyasagar College). |
| | " Rakhalchandra | City College, Calcutta. |
| | " Ramanimohan | Non-collegiate student, Roll Chi. N 1 |
| | " Satieschandra | Non-collegiate student, Roll Cal N 27 (Sanskrit College) |
| | " Saratchandra | Non-collegiate student, Roll Cal. N 87 |
| | " Saratchandra | Rajshahi College |
| | " Satinath | Victoria College, Comilla. |
| | " Satischandra | Ditto |
| | " Srikanta | Non-collegiate student, Roll Cal N 84. |
| | " Sudhirkumar | Non-collegiate student, Roll Cal N 217 (Presidency College). |
| 330 | " Suprakas | Non-collegiate student, Roll Cal N 127 (S. C College) |
| | " Surendrakumar | Victoria College, Comilla. |
| | " Suroschandra | Scottish Churches College. |
| | " Taranath | Victoria College, Comilla |
| | " Taraninohan | Non-collegiate student, Roll Coo N 1 |
| | Chanchal Prasad | Bangabasi College |
| | Chanda, Sudhansumohan | City College, Calcutta |
| | Chandapilla, P C | St Paul's College. |
| | Chandra, Haripada | Bangabasi College |
| | " Kalidas | Non-collegiate student, Roll Cal N 48 (Sanskrit College) |
| 340 | " Pannalal | Bangabasi College. |
| | " Priyalal | Ripon College |
| | Charyyar, Srikrishna | Wesleyan College, Bankura |
| | Chattopadhyay, Abhayapada | Scottish Churches' College |
| | " Abinaschandra | K. N College, Berhampur |
| | " Atulchandra | Non collegiate student, Roll Cal. N 113 (S C College). |
| | " Baidyanath | St Xavier's College. |
| | " Bankimchandra | Non collegiate student, Roll Cal N 114 (S. C College) |
| | " Bholanath | Wesleyan College, Bankura |
| | " Bijaykrishna | Hindu Academy, Daultapur |
| 350 | " Bimalchandra | Bangabasi College. |
| | " Chandicharan | Hughli College |
| | " Digindrachandra | Non-collegiate student, Roll Cal N 133 (Ripon College). |
| | " Ganeschandra | Vidyasagar College. |
| | " Girijabhushan | K. N College, Berhampur |
| | " Girijaprasad | Ditto. |
| | " Indubhushan | Brajamohan College, Barisal |
| | " Jagadiswar | Non-collegiate student, Roll Cal N 44 |
| | " Jagannath | Serampore College |
| | " Jyotsnanath | Non-collegiate student, Roll Cal N 62 (Vidyasagar College) |
| 360 | " Kalidas, I | South Suburban College, Bhowanipur |
| | " Kalikumar | K N College, Berhampur |
| | " Kartickchandra | Ripon College. |
| | " Manasacharan | Hindu Academy, Daulatpur. |
| | " Manimohan | South Suburban College, Bhowanipur. |
| | " Mrityunjay | Non-collegiate student, Roll Cal N 235 (South Suburban College, Bhowanipur) |
| | " Nagendranath | Brajamohan College, Barisal |
| | " Narayanchandra | Scottish Churches College |
| | " Narendranath, I | Vidyasagar College |
| | " Nareschandra | Ditto |
| 370 | " Parbaticharan | City College, Calcutta |
| | " Praphullakumar | Vidyasagar College |
| | " Rabindramohan | Ripon College |
| | " Ramdas | Wesleyan College, Bankura |
| | " Saktipada | Ripon College |
| | " Sarojranjan | Rajshahi College (Non-collegiate student) |
| | " Satyanarayan | K. N. College, Berhampur. |
| | " Sudarsan* | Carmichael College, Rangpur |
| | " Sudhirkumar, I | City College, Calcutta. |
| | Chattoraj, Hemgopal | K N. College, Berhampur |
| 380 | " Madangopal | Vidyasagar College. |
| | Chaudhuri, Abhayacharan | Non-collegiate student, Roll Syl N 2 |
| | " Ajaykumar | South Suburban College, Bhowanipur |
| | " Akshaykumar | A. M College, Mymensingh. |
| | " Asutosh | Chittagong College. |
| | " Asutosh | Victoria College, Cooch-Behar. |
| | " Bhupatibhushan | Bangabasi College. |
| | " Chandranath | Non-collegiate student, Roll Cal. N 148 (Ripon College). |
| | " Chandreswar | M. C. College, Sylhet. |

* Ex-student, Carmichael College, Rangpur

| | | |
|---|---|---|
| | Chaudhuri, Debendranath | A. M. College, Mymensingh |
| 390 | " Girischandra | Vidyasagar College |
| | " Harendrakumar | M. C. College, Sylhet. |
| | " Hemendranath | Victoria College, Cooch-Bihar |
| | " Herambachandra | Ripon College |
| | " Hiralal | Vidyasagar College |
| | " Jitendramohan | M C College, Sylhet |
| | " Makhanlal | Victoria College, Comilla (Roll Com N 14) |
| | " Mamindrachandra | Ditto (Roll Com N 13) |
| | " Nirmalchandra | Rajshahi College |
| | " Nripendralal | A M College, Mymensingh |
| 400 | " Nripendranath | Presidency College. |
| | " Rabindranarayan | Vidyasagar College |
| | " Rabindranath | Non-collegiate student, Roll Cal N 130 (S C College) |
| | Rasbihari | Vidyasagar College |
| | Rebatiranjan | M C. College, Sylhet |
| | Sachindranath | Vidyasagar College |
| | Sanjibchandra | South Suburban College, Bhowanipur |
| | Sasankamohan | K. N College, Berhampur |
| | Surendranath | Non-collegiate student, Roll Ber N 1. |
| | Susilkumar | Victoria College, Comilla (Roll Com N 20) |
| 410 | Choraria, Hiralal | Carmichael College, Rangpur |
| | Christanga, Samuel | St Paul's College |
| | D Amaratunga | Presidency College |
| | Dalbahadoor Gurang | Non collegiate student, Roll Cal N 723 (Presidency College) |
| | Dahiuddin Howlader | City College, Calcutta |
| | Daman Sham Sher Jung Bahadur Rana | Non collegiate student, Roll Cal N 228 (Presidency College) |
| | Dan, Mukundamurari | Non-collegiate student, Roll Ber. N 3 |
| | Das, Apratyayachandra | A M College, Mymensingh |
| | " Aswinikumar | Rajendra College, Faridpur |
| | " Atulchandra | Rajshahi College. |
| 420 | " Bagalajit | Vidyasagar College |
| | " Brindabanchandra | Victoria College, Comilla |
| | " Charumohan | Cotton College, Gauhati |
| | " Bibhutibhushan | St Paul's College |
| | " Dinabandhu | Victoria College, Comilla |
| | " Ghanasyam | Ripon College |
| | " Haramohan | Non-collegiate student, Roll Gau N 5 |
| | " Hirendranath | Ripon College |
| | " Jajneswar | Ditto |
| | Janakinath | City College, Calcutta. |
| 430 | " Jatindranath | Ditto |
| | Jyotsnamayi | Bethune College |
| | Kedarchandra | A M College, Mymensingh |
| | Kiranchandra | Rajendra College, Faridpur |
| | Kisorilal II | Hughli College |
| | Lakshmanchandra | South Suburban College, Bhowanipur |
| | Lakshmikanta | Cotton College, Gauhati |
| | Lalitmohan | Ripon College. |
| | Mahendrachandra | Non collegiate student, Roll Dac N 8 |
| | Mahendrakumar | Victoria College, Comilla |
| 440 | " Nabinchandra | Bangabasi College |
| | Nagendrabhusan | Non-collegiate student, Roll Cal N 61 (Vidyasagar College) |
| | Natendranath | Scottish Churches College |
| | Nishibhushan | Ripon College. |
| | Padaballabh | City College, Calcutta |
| | Pitabas | South Suburban College, Bhowanipur |
| | Prasannakumar | Brajamohan College, Barisal. |
| | Pyarilal | K N College, Berhampur |
| | Rajmohan | Carmichael College, Rangpur. |
| | Ramanimohan | A M. College, Mymensingh. |
| 450 | " Rameschandra | Carmichael College, Rangpur |
| | Rebatimohan | Vidyasagar College |
| | Rebatiraman | Chittagong College |
| | Samarendrakumar | Serampore College. |
| | Saratchandra | Vidyasagar College. |
| | Sasibhushan | Bangabasi College |
| | Sasibhushan | Vidyasagar College |
| | Subimalchandra | Presidency College |
| | Sureschandra | Bangabasi College. |
| | Suruchi | Non-Collegiate student, Roll Bar. F N 2 |
| 460 | " Trailokyanath | Hindu Academy, Daulatpur |
| | Dasgupta, Bhupendrachandra | Carmichael College, Rangpur, Non-collegiate student, Roll Rag. N 16 |
| | " Binaybhusan | Scottish Churches College |
| | " Chunilal | K. N College, Berhampur |
| | " Debendrachandra | Victoria College, Comilla |
| | " Kiranchandra | Vidyasagar College |

| | | | |
|---|---|---|---|
| | Dasgupta, | Krishnaranjan | ... Bangabasi College. |
| | ,, | Nagendranath | ... Non-collegiate student, Roll Rang. N 6 (Carmichael College, Rangpur). |
| | ,, | Nalini | ... Non-collegiate student, Roll Cal F N 10 |
| | ,, | Narendranath | ... Brajamohan College, Barisal. |
| 470 | ,, | Nripendrachandra | ... M. C. College, Sylhet |
| | ,, | Praphullakumar | ... Brajamohan College, Barisal |
| | ,, | Pramathanath | ... Scottish Churches College |
| | ,, | Rajeschandra | ... Brajamohan College, Barisal |
| | ,, | Rameschandra | ... Non collegiate student, Roll Cal N 163 (South Suburban College, Bhowanipur). |
| | ,, | Rohinikumar | .. Brajamohan College, Barisal. |
| | ,, | Sarojini | ... Diocesan College. |
| | ,, | Upendranath | ... Victoria College, Comilla |
| | Datoram | | ... Ripon College. |
| | Datta, | Samuel | ... St. Paul's College. |
| 480 | Datta, | Amarnath | ... Scottish Churches College. |
| | ,, | Anukulchandra | ... Victoria College, Comilla . |
| | ,, | Asutosh | ... A. M. College, Mymensingh.- |
| | ,, | Baidyanath | ... Bangabasi College |
| | ,, | Baridbaran | . Wesleyan College, Bankura |
| | ,, | Bimalkumar | .. A M. College, Mymensingh. |
| | ,, | Binaybhushan | ... Victoria College, Comilla. |
| | ,, | Dharmanarayan | .. Cotton College, Gauhati |
| | ,, | Dulalchand | .. Vidyasagar College. |
| | ,, | Haripada | ... Ripon College. |
| 490 | ,, | Hemantakumar | ... Bangabasi College |
| | ,, | Hemendramohan | ... M C College, Sylhet |
| | ,, | Jatindramohan | ... Non-collegiate student, Roll Cal N 50 (Vidyasagar College). |
| | ,, | Kalidas | ... Vidyasagar College |
| | ,, | Kiranchandra | .. Non-collegiate student, Roll Cal N 126 (Scottish Churches College) |
| | ,, | Madhusudan | ... Carmichael College, Rangpur. |
| | ,, | Manomohan | ... Non-collegiate student, Roll Cal. N 18. |
| | ,, | Mukundamurari | ... Ripon College. |
| | ,, | Narayanchandra | ... Vidyasagar College |
| | ,, | Narendranath | ... Ditto |
| 500 | ,, | Nilkamal | ... Chittagong College. |
| | ,, | Prabhaschandra | ... Bangabasi College |
| | ,, | Rabindranath | .. South Suburban College, Bhowanipur |
| | ,, | Rameschandra | .. City College, Calcutta. |
| | ,, | Ranklal | ... Rajshahi College. |
| | ,, | Sudhirchandra | .. Brajamohan College, Barisal |
| | ,, | Sukamalchandra | ... Bangabasi College |
| | ,, | Sureschandra | .. Carmichael College, Rangpur |
| | ,, | Susilchandra | .. Vidyasagar College. |
| | ,, | Susilkumar | ... Ditto |
| 510 | ,, | Syamlal | .. Brajamohan College, Barisal |
| | ,, | Upendrachandra | ... South Suburban College, Bhowanipur. |
| | Dattagupta, | Amindramohan | .. A. M College, Mymensingh |
| | Dattaray, | Dhirajkumar | ... Chittagong College. |
| | De, | Abanimohan | .. K N College, Berhampur. |
| | ,, | Amarendranath | ... Vidyasagar College |
| | ,, | Bankimchandra | ... Ditto. |
| | ,, | Bhajendranath | ... Ditto. |
| | ,, | Bibhutiranjan | ... South Suburban College, Bhowanipur. |
| | ,, | Biswanath | ... Non-collegiate student, Roll Dac N 14 |
| 520 | ,, | Charitramohan | . M C College, Sylhet |
| | ,, | Gopikakanta | ... K N College, Berhampur |
| | ,, | Harashitchandra | ... Scottish Churches College |
| | ,, | Indrakumar | .. Victoria College, Comilla |
| | ,, | Jatindramohan | .. Brajamohan College, Barisal |
| | ,, | Jatindramohan | ... M. C. College, Sylhet. |
| | ,, | Jnanendranath | ... Scottish Churches College. |
| | ,, | Jyotischandra | ... Hindu Academy, Daulatpur. |
| | ,, | Manindranath | ... Victoria College, Cooch Behar. |
| | ,, | Manonitkumar | ... Serampur College. |
| 530 | ,, | Mukundalal | ... South Suburban College, Bhowanipur. |
| | ,, | Nagendrachandra | ... Rajshahi College. |
| | ,, | Narendranath | ... South Suburban College, Bhowanipur. |
| | ,, | Rabindranath | ... City College, Calcutta. |
| | ,, | Rajendrakumar | ... Brajamohan College, Barisal. |
| | ,, | Ramendranath | ... A. M. College, Mymensingh. |
| | ,, | Sashinandan | ... Krishnagar College. |
| | ,, | Satischandra, II | .. Victoria College, Cooch Behar. |
| | ,, | Tarapada | ... St. Xavier's College. |
| | ,, | Umacharan | ... Vidyasagar College. |
| 540 | ,, | Upendrachandra | ... Victoria College, Comilla |
| | Debhanaik, | Rohatikanta | ... A M. College, Mymensingh. |
| | Dechaudhuri, | Bimalkrishna | ... M C. College, Sylhet. |
| | Deray, | Dhirendranarayan | ... Carmichael College, Rangpur. |

| | | |
|---|---|---|
| | Deray, Sailendrabijay | Ripon College. |
| | Deb, Bhagabanchandra | City College, Calcutta. |
| | Birendrachandra | M C. College, Sylhet. |
| | Jyotischandra | Carmichael College, Rangpur. |
| | Kedernath | Victoria College, Comilla. |
| | Kshitishchandra | Carmichael College, Rangpur |
| 550 | Rabindrakrishna | Scottish Churches College |
| | Subodhranjan | Victoria College, Comilla. |
| | Debmaulik, Praphullachandra | Vidyasagar College |
| | Debsinha, Patiram | Victoria College, Cooch Behar (non-collegiate student, Roll Coo N 9) |
| | Dewan Abdul Majid | A. M. College, Mymensingh |
| | Dewan Lutfor Rahman | Rajshahi College. |
| | Dewan Mohammad Ahmad Chawdhury | M C. College, Sylhet. |
| | Dhar, Jogendranath | Vidyasagar College |
| | " Sasankabhushan | Victoria College, Comilla |
| | " Sridharchandra | Ripon College |
| 560 | " Tarakchandra | A M College, Mymensingh |
| | Dharmajumdar, Pulinbihari | Non-collegiate student, Roll Cal N 99 (Vidyasagar College) |
| | Din Mohammad Mia | Bangabasi College |
| | Edwin Hugh Robertson | St Xavier's College |
| | Fariduddin Khan | Non-collegiate student, Roll Com N 22 |
| | Farrokh Ahmad | Chittagong College |
| | Faquir Ahmad Khan | A M College, Mymensingh |
| | Fayezuddin Sarker | Rajshahi College |
| | Fazlal Karim | Rajendra College, Faridpur |
| | Ferdinand Joseph | M C College, Sylhet |
| 570 | G Nezamuddin | St Xavier's College |
| | Gangadas Mimani | Scottish Churches College |
| | Gangopadhyay, Alokanath | City College, Calcutta |
| | " Bhaskarchandra | Bangabasi College |
| | " Bibhutibhushan | Victoria College, Cooch Behar |
| | " Birendralal | Vidyasagar College |
| | " Ganeschandra | Brajamohan College, Barisal |
| | " Hemlal | Vidyasagar College |
| | " Herambakumar | Ripon College |
| | " Hiralal | Brajamohan College, Barisal |
| 580 | " Kalipada | K N College, Berhampur |
| | " Kshitradas | St. Paul's College |
| | " Lalitmohan | Vidyasagar College |
| | " Nirmalendu | Ditto |
| | " Pareschandra | Brajamohan College, Barisal |
| | " Phanindralal | B M College, Barisal (Roll Par N 7) |
| | " Radhagobinda | Scottish Churches College |
| | " Ramendralal | Non collegiate student, Roll Cal N 77 |
| | " Sarojkumar | Krishnagar College |
| | " Sukumar | Brajamohan College, Barisal |
| 590 | " Susilkumar | Ripon College |
| | " Tarakanath | Brajamohan College, Barisal |
| | " Upendranath | Scottish Churches College. |
| | George, P. J. | Serampur College |
| | Gharui, Jatindranath | Non collegiate student, Roll Cal N 242 |
| | Ghatak, Abinaschandra | Bangabasi College. |
| | " Kalipada | Ditto |
| | Ghorui, Makhanlal | Ditto. |
| | Ghosh, Abhibhushan | Vidyasagar College. |
| | " Amulyakumar | Wesleyan College, Bankura |
| 600 | " Annadaprasad | K N College, Berhampur |
| | " Asutosh | South Suburban College, Bhowanipur |
| | " Asutosh | Non-collegiate student, Roll Cal N 206 (City College, Calcutta) |
| | " Basantakumar | Scottish Churches College. |
| | " Balaram | Vidyasagar College |
| | " Bhudebchandra | Scottish Churches College |
| | " Bhupatibhushan | City College, Calcutta. |
| | " Bibhutibhushan | K N College, Berhampur |
| | " Bijaykumar | Ripon College. |
| | " Binodkrishna | Scottish Churches College. |
| 610 | " Birendrachandra | Victoria College, Cooch Behar |
| | " Birendranath | Vidyasagar College |
| | " Chandrakanta | Non-collegiate student, Roll Cal. N 179 (City College, Calcutta) |
| | " Ganeschandra | Ripon College |
| | " Gopalchandra | K. N College, Berhampur (Roll Ber N 15) |
| | " Hrishikes | City College, Calcutta. |
| | " Indumadhab | Vidyasagar College. |
| | " Jaminikanta | Ditto. |
| | " Jitendranath | Ditto. |
| | " Jnanendranath | A. M College, Mymensingh |
| 620 | " Jyotsna | Non-collegiate student, Roll Cal F N 5. |
| | " Kripanath | Wesleyan College, Bankura |

| | | |
|---|---|---|
| | Ghosh, Krishnalal | Scottish Churches College. |
| | " Kshitischandra | Non-collegiate student, Roll Cal. N 74 (Vidyasagar College). |
| | " Kshudiram | Rajshahi College |
| | " Lilabati | Non collegiate student, Roll Mym F N 1. |
| | " Lalitkumar | Non collegiate student, Roll Cal. N 17 |
| | " Mahendrakumar | Ripon College |
| | " Mahendralal | Scottish Churches College. |
| | " Manindrachandra | K N College, Berhampur (Roll Ber N 6) |
| 630 | " Manindralal | South Suburban College, Bhowanipur |
| | " Manindranath | Ditto. |
| | " Nagendranath | A M College, Mymansingh. |
| | " Nanichandra | Presidency College |
| | " Nanigopal | South Suburban College, Bhowanipur. |
| | " Narahari | Non-collegiate student, Roll Cal N 140 (Ripon College) |
| | " Narendraprasad | Bangabasi College |
| | " Nikunjaranjan | Non-collegiate student, Roll Cal. N 165 (South Suburban College, Bhowanipur) |
| | " Nripendranath | Ripon College |
| | " Pabitrakumar | Presidency College |
| 640 | " Prabodhchandra | Brajamohan College, Barisal |
| | " Pramathanath | Carmichael College, Rangpur. |
| | " Rabindranath | Vidyasagar College. |
| | " Radhasyam | K N College, Berhampur |
| | " Rajendranath | Bangabasi College |
| | " Ramakanta | K N College, Berhampur |
| | " Ramanikanta | South Suburban College, Bhowanipur |
| | Ramanimohan | Brajamohan College, Barisal |
| | Ramkrishna | Wesleyan College, Bankura |
| | Santoshkumar | City College, Calcutta. |
| 650 | " Sarala | Bethune College. |
| | Saratchandra | Ripon College |
| | Saratchandra | Krishnagar College. |
| | Sarojendunath | Victoria College, Cooch Behar |
| | Sasisekhar | Ripon College |
| | Satischandra | City College, Calcutta. |
| | Satindranath | Ditto. |
| | Subodhchandra | Ditto. |
| | " Sudhirkumar | South Suburban College, Bhowanipur |
| | " Sudhirlal | Non-collegiate student, Roll Cal N 53 (Vidyasagar College). |
| 660 | " Surendranath, I | Brajamohan College, Barisal |
| | Sureschandra | Carmichael College, Rangpur |
| | Suresbandhu | Ditto. |
| | Syamacharan | Bangabasi College. |
| | Tarakbrahma | Ditto |
| | Tarakchandra | Serampur College |
| | Ghoshal, Bimalacharan | Sanskrit College |
| | " Biswesvar | K N College, Berhampur |
| | " Nandalal | Vidyasagar College. |
| | " Panchkari | Ditto. |
| 670 | " Ramanimohan | Scottish Churches College |
| | " Susilkumar | Hughli College |
| | Ghoshchaudhuri, Dhirendrakrishna | K N College, Berhampur. |
| | Ghyasuddin Ahmed | Cotton College, Gauhati. |
| | Golam Mahid | M C. College, Sylhet. |
| | Golam Mohiuddin Ahmed | Rajshahi College |
| | Golam Somdani Khadim | City College, Calcutta |
| | Gop, Ramohan | Non-collegiate student, Roll Dac N 12 |
| | Goswami, Ballabhkanta | Rajshahi College |
| | " Jagatbandhu | Sanskrit College |
| 680 | " Tripanath | Vidyasagar College |
| | Krishnabrahma | Rajshahi College. |
| | Khitischandra | Presidency College |
| | Manindranarayan | South Suburban College, Bhowanipur. |
| | Ramranjan | Wesleyan College, Bankura. |
| | Upendranath | Ripon College |
| | Guha, Analendu | K N College, Berhampur. |
| | " Birendranath | Non-collegiate student, Roll Dac. N 6 |
| | " Durgamohan | Non-collegiate student, Roll Cal. N 45 |
| | " Jadabchandra | City College, Calcutta. |
| 690 | " Kalimohan | Bangabasi College. |
| | " Prabodhchandra | Brajamohan College, Barisal. |
| | " Praphullakumar | South Suburban College, Bhowanipur |
| | " Satindranath | Vidyasagar College. |
| | " Sudhircharan | Ditto |
| | " Surendramohan | Brajamohan College, Barisal. |
| | Guharay, Bhupendramohan | Bangabasi College. |
| | " Jnanranjan | Brajamohan College, Barisal. |
| | Gupta, Byomkes | Scottish Churches College. |

| | | |
|---|---|---|
| | Gupta, Dilipkumar | Non-collegiate student, Roll Cal. N 111 (Scottish Churches College) |
| 700 | " Jitendrakumar | Non collegiate student, Roll Cal N 247 (South Suburban College, Bhowanipur). |
| | " Kshirodchandra | Victoria College, Cooch Behar |
| | " Manindrakumar | Brajamohan College, Barisal |
| | " Nikunjabihari | K N College, Berhampur |
| | " Paresnath | Vidyasagar College |
| | " Suchindranath | Rajendra College, Faridpur |
| | " Suchasobhana | Diocesan College |
| | Gurra, Jatindranath | South Suburban College, Bhowanipur. |
| | Hafez Ahmad | Chittagong College |
| | Hajra, Ramprakas | Vidyasagar College. |
| 710 | Haldar, Bipinbehari | Serampur College. |
| | " Dhaneswar | Non collegiate student, Roll Cal N 144 (Ripon College) |
| | " Prabodhchandra | South Suburban College, Bhowanipur |
| | " Pradyotkumar | Serampur College. |
| | Haridal Waghray | City College, Calcutta. |
| | Haris Ullah | M C College, Sylhet. |
| | Hashem Ali Khan | Brajamohan College, Barisal |
| | Hazi Niaz Ahmed* | Ripon College |
| | Hom, Karunabala | Bethune College |
| | Hor, Durgakripa | Ripon College |
| 720 | Hurmatullah Akhud | Rajshahi College |
| | Imanuddin Ahmed | Ditto (non collegiate student) |
| | Isaac, C T. | Serampur College |
| | Jainarin Sherma | Vidyasagar College |
| | Jamaluddin Ahmed | South Suburban College, Bhowanipur |
| | Jamiruddin Ahamed | Victoria College, Cooch Behar |
| | Jasimuddin Biswas | Rajendra College, Faridpur |
| | Jena, Gurucharan | Vidyasagar College |
| | Jha, Bhujangabhushan | Scottish Churches College |
| | " Kahkanta | Rajshahi College. |
| 730 | " Pitambar | Ripon College |
| | Joseph, Koshy | Serampur College. |
| | Kahluddin Munshi | Carmichael College, Rangpur |
| | Kanjilal, Himansubhushan | Hindu Academy, Daulatpur |
| | Kanungo, Kedarnath | Chittagong College |
| | " Upendralal | Ditto |
| | Kar, Gopalchandra | Rajshahi College. |
| | " Haripada | South Suburban College, Bhowanipur |
| | " Ramratan | Ripon College |
| | " Satischandra | Scottish Churches College |
| 740 | Karmakar, Maheschandra | Victoria College, Comilla |
| | " Rakhalchandra | Wesleyan College, Bankura |
| | " Saratchandra | Victoria College, Comilla |
| | Kazi Ansaruddin Ahmad | Rajendra College, Faridpur |
| | Kazi Erfanuddin | Brajamohan College, Barisal. |
| | Keramatali Khan | Ripon College |
| | Ketarazu Venkates Worlu | Non collegiate student, Roll Cal N 240 |
| | Khaja Ahamed | Chittagong College |
| | Khan, Phelaram | Wesleyan College, Bankura |
| | Khandaker Abdul Majid | Victoria College, Comilla |
| 750 | Khandekar Hedayetun Nabi | K N College, Berhampur |
| | Khasnabis, Birendranath | Vidyasagar College |
| | Khondakar Md. Abul Qussem | Rajshahi College |
| | Khorshed Ahmed | Brajamohan College, Barisal |
| | Khorshed Ali Mean | A M College, Mymensingh |
| | Kobad Hussain Ahmed | Cotton College, Gauhati |
| | Konar, Manmathanath | Non-collegiate student, Roll Cal N 31 |
| | Krishnamohan Wahi | Non-collegiate student, Roll Cal N 105 (St Paul's College) |
| | Kumar, Rajanikanta | K N College Berhampur (Roll Ber N 7) |
| | Kundagrami, Chintaharan | Ripon College |
| 760 | Kundu, Debendranath | Rajshahi College |
| | " Jatindranath | Scottish Churches College |
| | " Kalibijay | Serampur College. |
| | " Kasinath | Vidyasagar College |
| | " Panchanan | K N. College, Berhampur |
| | Kusari, Birajprasanna | Brajamohan College, Barisal |
| | Laha, Jagadbandhu | Scottish Churches College |
| | Lahiri, Dhirendrakanta | A M College, Mymensingh |
| | " Jitendranath | Ripon College |
| | " Kalidas | Bangabasi College |
| 770 | " Saileschandra | South Suburban College, Bhowanipur. |
| | " Tulsicharan | Ripon College |
| | Lalasankar Das Khasna | Vidyasagar College |
| | Laskar, Aswinikumar | Non-collegiate student, Roll Com N 3 |
| | " Purnachandra* | Carmichael College, Rangpur |

* Ex-student.

| | | |
|---|---|---|
| | Laskar, Sudhirranjan | A. M College, Mymensingh. |
| | Lehazuddin Ahmed | Brajamohan College, Barisal |
| | Lodh, Rajendrachandra | Non-collegiate student, Roll Com N 2 |
| | Louha, Haradas | Non-collegiate student, Roll Dac. N 9. |
| | Luthfor Rahaman | Victoria College, Cooch Behar. |
| 780 | Mabud Baksh | City College, Calcutta. |
| | Mafizuddin Ahmed | Rajshahi College. |
| | Mahabirprasad Agarwala | Scottish Churches College |
| | Mahamad Sabar Ullah | M. C College, Sylhet |
| | Mahamed Faiz | Chittagong College. |
| | Mahamed Jaynal Abdin Khan | Non-collegiate student, Roll. Cal N 169 |
| | Mahamed Ozaullah | Chittagong College |
| | Mahammad Abu Zaher | K. N College, Berhampur |
| | Mahammad Badruzzaman | Cotton College, Gauhati |
| | Mahammad Farazel Hossein Mandal | Non-collegiate student, Roll Cal. N 182 (City College, Calcutta). |
| 790 | Mahammed Jenayetulla | Carmichael College, Rangpur |
| | Mahammed Madassir | M. C College, Sylhet. |
| | Mahammed Tasseer-uddin Khan | Non collegiate student, Roll Cal. N 192 (City College, Calcutta). |
| | Mahomed Entaj Ali | Brajamohan College, Barisal |
| | Mahomed Madaswar Hossain | K. N College, Berhampur. |
| | Mahomed Phulkhan | Rajshahi College. |
| | Maiti, Krishnachaitanya | Non-collegiate student, Roll Cal. N 125 (Scottish Churches College). |
| | " Satischandra | Non-collegiate student, Roll Cal N 145 (Ripon College) |
| | " Sisirkumar | City College, Calcutta |
| | Maitra, Bimalchandra | Carmichael College, Rangpur |
| 800 | " Bibhutibhushan | Bangabasi College |
| | Manmathanath | Rajshahi College |
| | Mohitkumar | Ditto (non-collegiate student) |
| | Phanindralal | Victoria College, Cooch Behar |
| | Praphullakumar | Rajshahi College (non collegiate student) |
| | Majumdar, Abinaschandra | Vidyasagar College |
| | Arunranjan | A M College, Mymensingh (Roll Mym N 9) |
| | Aswinikumar | Vidyasagar College |
| | Bagalaprasanna | South Suburban College, Bhowanipur |
| | Basantakumar | Rajendra College, Faridpur |
| 810 | Bijaykumar | Wesleyan College, Bankura |
| | Bholanath | Non-collegiate student, Roll Cal N 213 |
| | Birendranath | Wesleyan College, Bankura. |
| | Dharanikanta | Carmichael College, Rangpur |
| | Daneshkumar | Bangabasi College |
| | Jogendramohan | Victoria College, Comilla. |
| | Kshirodeswar | Brajamohan College, Barisal |
| | Mahimaranjan | Krishnagar College |
| | Manindramohan | Scottish Churches College. |
| | Manmathanath | Bangabasi College |
| 820 | Munindrachandra | Ripon College |
| | Narayanchandra | Bangabasi College |
| | Narendrakumar | City College, Calcutta |
| | Nitaicharan | Ripon College. |
| | Pabitrakumar | South Suburban College, Bhowanipur |
| | Pramathanath | Non collegiate student, Roll Ber. N 16 (K. N College, Berhampur) |
| | Purnachandra | Victoria College, Comilla. |
| | Rameschandra | Non-collegiate student, Roll Far. N 6. |
| | Sailajabhushan | Ripon College |
| | Sarojkumar | Carmichael College, Rangpur. |
| 830 | Sarojranjan | Non-collegiate student, Roll Cal N 142 (Ripon College) |
| | " Satischandra | Non-collegiate student, Roll Cal N 190 (City College, Calcutta). |
| | " Sisirkumar | Rajshahi College |
| | " Sureschandra | Scottish Churches College. |
| | Mazram Ali | M C College, Sylhet |
| | Mallik, Anathnaran | Non collegiate student, Roll Bank N 1. |
| | " Jajneswar | Scottish Churches College |
| | " Mrinallal | Vidyasagar College. |
| | " Nikarika | Non-collegiate student, Roll Cal. F N 9 |
| | " Prabhaschandra | Scottish Churches College. |
| 840 | Mammen, David C. | Serampur College. |
| | Mandal, Batakrishna | South Suburban College, Bhowanipur. |
| | Kamakhyacharan | Wesleyan College, Bankura. |
| | Jogendramohan | City College, Calcutta |
| | Mahadeb | Non-collegiate student, Roll Dac. N 11. |
| | Nagendranath | Wesleyan College, Bankura (Roll Bank. N 3). |
| | Prankrishna | Serampur College |
| | Rajkumar | Hindu Academy, Daulatpur. |
| | Rohinikumar | Rajendra College, Faridpur |
| | Satischandra | Bangabasi College. |

| | | |
|---|---|---|
| 850 | Mandal, Surendranath | South Suburban College, Bhowanipur. |
| | Mani, Sachindranath | Rajshahi College |
| | Manna, Amarendranath | Ripon College |
| | ,, Puhinbihari | City College, Calcutta |
| | Manoharlal Tiwary | Non-collegiate student, Roll Cal N 63 (Vidyasagar College) |
| | Mansoorah | Carmichael College, Rangpur |
| | Manzural Haq | St Xavier's College |
| | Marik, Jnanendranath | Bangabasi College |
| | Masiruddin Ahamed | Rajshahi College |
| | Mathuraprasad Verma | Non-collegiate student, Roll Cal N 30. |
| 860 | Matthew, K. O. | St Paul's College |
| | ,, P C | Ditto. |
| | ,, T G | Ditto |
| | Mayezuddin Talukder | Ripon College |
| | Md Abdulquddus | Victoria College, Cooch Behar |
| | Abul Bashar | M C College, Sylhet |
| | Ahsanali | City College, Calcutta |
| | Akkas Ali Khan | Rajshahi College |
| | Ali Nowaz | Chittagong College |
| | Enus Meah | Ditto (Roll Chi N 6) |
| 870 | ,, Esahaque Uddin | A M College, Mymensingh |
| | Jahural Hoque | Rajshahi College |
| | Kaem | Bangabasi College |
| | Kalam Ali | A M College, Mymensingh |
| | Kasem Ali | Ripon College. |
| | Manzoor Ahsan | Bangabasi College |
| | Ramzan Ali | Carmichael College, Rangpur |
| | Ranshan Ali | Hughli College |
| | Samuddin | Non collegiate student, Roll Mym N 2 |
| | Yunas Mia | Victoria College, Comilla |
| 880 | Medhi, Binandichandra | Cotton College, Gauhati. |
| | Mian Mohammad Sekandarali | A M. College, Mymensingh |
| | Miazanali Khan | Rajshahi College |
| | Mir Moazzom Ali | Brajamohan College, Barisal. |
| | Mirali Hossain | City College, Calcutta |
| | Mirza Habibar Rahman | Rajshahi College |
| | Misra, Bidyananda | A M College, Mymensingh |
| | ,, Prasannakumar | City College, Calcutta |
| | ,, Ramnarayan | Non collegiate student, Roll Cal N 253 |
| | Mitra, Bameeranjan | Bangabasi College |
| 890 | ,, Bijalibhushan | K N College, Berhampur (Roll Ber. N 9) |
| | ,, Binaybhushan | K N College, Berhampur |
| | ,, Charuchandra | Non-collegiate student, Roll Cal N 39 |
| | ,, Debarata | Non collegiate student, Roll Cal N 232 (Presidency College) |
| | ,, Dhirendralal | Scottish Churches College |
| | ,, Dhirjaticharan | Vidyasagar College (Roll Chi N 2) |
| | Harendranath | Vidyasagar College. |
| | Hiralal | Ripon College |
| | Jyotiprasad | Ditto |
| | Jyotischandra | Victoria College, Cooch Behar |
| 900 | ,, Jyotischandra | Hindu Academy, Daulatpur. |
| | Kamalakanta | Rajshahi College |
| | Kamalkrishna | Non collegiate student, Roll Ber N 12 (K N College, Berhampur) |
| | Khagendranath | Non collegiate student, Roll Cal N 115 (Scottish Churches College). |
| | Kisorimohan | South Suburban College, Bhowanipur |
| | Manindranath | Non-collegiate student, Roll Col N 47 (Vidyasagar College). |
| | Nakurchandra | St Paul's College. |
| | Nandalal | St Xavier's College |
| | Pasupati | Bangabasi College. |
| | Phanindrakumar | St Xavier's College |
| 910 | ,, Sachindrakumar | Scottish Churches College |
| | Sajanikanta | City College, Calcutta |
| | Samarendramohan | South Suburban College, Bhowanipur |
| | Sambhunath | Non-collegiate student, Roll Ber N 4 |
| | Satyacharan | Scottish Churches College. |
| | Satyaprakas | Ditto |
| | Sitansusekhar | Bangabasi College. |
| | Sudhirkumar | K N College, Berhampur. |
| | Sureschandra | Non-collegiate student, Roll Cal. N 64 (Vidyasagar College). |
| | ,, Susyamalchandra | South Suburban College, Bhowanipur |
| 920 | Mohammad Hossain | Carmichael College, Rangpur |
| | Mohammad Ayub Khan | M C. College, Sylhet |
| | Mohammad Fazlal Haque | Non-collegiate student, Roll Cal N 21. |
| | Mohammad Golam Hussain | Non-collegiate student, Roll Cal. N 155 (Ripon College). |

| | | |
|---|---|---|
| | Mohammadali Ahsan | Ripon College. |
| | Mohammad Ilyas Khan | Ditto |
| | Mohammed Anisuzzaman | Cotton College, Gauhati. |
| | Mohammed Yakub Ali | Brajamohan College, Barisal. |
| | Mohammed Zaller Rahman | Rajshahi College (Non-collegiate student) |
| | Mohan Dhar Sharma | Non-collegiate student, Roll Cal N 236 (South Suburban College, Bhowanipur). |
| 930 | Mohanlal Khatri | Scottish Churches College. |
| | Momuddin Ahmed | Ripon College. |
| | Momnul Huque | Victoria College, Comilla |
| | Mosleh-uddin Ahmed | Presidency College. |
| | Moslemuddin Ahmed | Carmichael College, Rangpur |
| | Motilal | Bangabasi College |
| | Mozharul Anwar | Chittagong College. |
| | Muhammad | Wesleyan College, Bankura. |
| | Muhammad Abdur Rahim | A M College, Mymensingh. |
| | Muhammad Abdur Rouf | Non-collegiate student, Roll Com N 4 |
| 940 | Muhammad Ishaque Miah | K N College, Berhampur |
| | Muhammad Zahurul Haque | Victoria College, Comilla |
| | Muhammed Faqher Rohman Chowdhury | St Xavier's College |
| | Mukhopadhyay, Ajitkumar | Ripon College |
| | " Amares | Ditto |
| | " Amiyakumar | St Xavier's College |
| | " Anantakumar | Non-collegiate student, Roll Com N 7 |
| | " Baladeb | Wesleyan College, Bankura. |
| | " Balailal | Presidency College |
| | " Banbihari | Bangabasi College |
| 950 | " Basantakumar | City College, Calcutta. |
| | " Bholanath | Ripon College |
| | " Bibhutibhushan | Vidyasagar College |
| | " Bishnucharan | Brajamohan College, Barisal. |
| | " Biswaswar | Non collegiate student, Roll Cal N 187 (City College, Calcutta) |
| | " Chittaranjan | Non collegiate student, Roll Hug N 3 |
| | " Debendranath | Brajamohan College, Barisal. |
| | " Dhirendranath | Ripon College |
| | " Dhireswar | City College, Calcutta |
| | " Gunendrakrishna | Non-collegiate student, Roll Cal. N 146 (Ripon College) |
| 960 | " Harakali | Bangabasi College |
| | " Harigopal | Ripon College. |
| | " Harimohan | Vidyasagar College. |
| | " Hiralal | K N. College, Berhampur |
| | " Indubhushan | South Suburban College, Bhowanipur. |
| | " Jyotischandra | Ditto |
| | " Kanailal | Hindu Academy, Daulatpur. |
| | " Kartikchandra | Ripon College. |
| | " Krishnachandra | City College, Calcutta. |
| | " Krishnakumar | Bangabasi College. |
| 970 | " Lalitmohan | Serampur College |
| | " Lalitmohan | Scottish Churches College |
| | " Mahadeb | K N College, Berhampur |
| | " Manindrachandra | Brajamohan College, Barisal. |
| | " Nagendranath | K N College Berhampur |
| | " Nalinikanta | Ditto |
| | " Nandalal | Carmichael College, Rangpur. |
| | " Phambhushan | Victoria College, Cooch Behar |
| | " Phambhushan | South Suburban College, Bhowanipur |
| | Pramathakumar | Rajendra College, Faridpur |
| 980 | " Pramodlal | Ripon College |
| | Praphullachandra | Ditto |
| | Pundarikaksha | Vidyasagar College |
| | Rabindranath | Victoria College, Comilla |
| | Ramkinkar | K N College, Berhampur |
| | Ramlal | Wesleyan College, Bankura |
| | Ranabilas | Scottish Churches College |
| | Rananath | Ripon College |
| | Sailendrakumar | K N College, Berhampur |
| | Sambhucharan | Scottish Churches College. |
| 990 | " Sanatkumar | Ditto |
| | Saratchandra | Serampur College. |
| | Satischandra | Vidyasagar College |
| | Sibcharan | Presidency College |
| | Sibdas | Ripon College. |
| | Sibanath | K. N College, Berhampur. |
| | Sudhischandra | Krishnagar College |
| | Syamapada | K. N. College, Berhampur (Roll Ber. N 10). |
| | " Tarakeswar | Non-collegiate student, Roll Cal. N 188 (City College, Calcutta). |
| | " Umakinkar | K. N. College, Berhampur. |
| 1000 | Mukhoti, Kshitishchandra | A. M College, Mymensingh. |
| | Munawor Hussain | M. C. College, Sylhet. |

| | | |
|---|---|---|
| | Munsi, Saurindramohan | Bangabasi College. |
| | Mustaphi, Bholanath | Vidyasagar College |
| | Nabia, Haranath | Cotton College, Gauhati |
| | Nag, Bholanath | Non-collegiate student, Roll Dac N 15 |
| | " Binodgopal | Vidyasagar College |
| | " Girijabhushan | City College, Calcutta |
| | " Jogeschandra | Ditto |
| | " Praphullachandra | St Paul's College |
| 1010 | " Rasikchandra | Non-collegiate student, Roll Dac N 20 |
| | Nahabiswas, Bidhubhushan | Victoria College, Comilla |
| | Naimul Hoque | Rajshahi College |
| | Nandi, Brijanbihari | Victoria College, Comilla (Roll Com N 11) |
| | " Jugalkisor | South Suburban College, Bhowanipur |
| | " Manmathanath | Ripon College |
| | " Saradindubhushan | St Paul's College |
| | " Saratkumar | Ripon College. |
| | " Sureschandra | South Suburban College, Bhowanipur. |
| | Nandiray, Manindranath | City College, Calcutta |
| 1020 | Nanyasi, Nagendrakisor | Rajshahi College. |
| | Nasibuddin Khan | Ripon College |
| | Nasiruddin Ahmed Chaudhury | Victoria College, Comilla |
| | Nath, Chandrakanta | Ripon College |
| | " Debanath | Cotton College, Gauhati |
| | " Pyarimohan | Non-collegiate student, Roll Cal N 204 (City College, Calcutta) |
| | " Santimay | Scottish Churches College |
| | Nawalkishore Pandey | City College, Calcutta |
| | Neog, Hemendranath | Cotton College, Gauhati |
| | Nezam Uddin Ahmed | A M College, Mymensingh |
| 1030 | Niyogi, Abanimohan | Carmichael College, Rangpur (Roll Rang N 3) |
| | " Bhagabatcharan | K N College, Berhampur |
| | " Bijaygobinda | City College, Calcutta |
| | " Nalinikanta | Victoria College, Cooch Behar |
| | " Satipada | K N College, Berhampur |
| | Nooral Hoda Khan | Carmichael College, Rangpur. |
| | Noor Mohamed | Non-collegiate student, Roll Cal N 10 |
| | Nosibulla Biswas | K N College, Berhampur |
| | Nur Ahmed | Ripon College |
| | Obed Miaz | Serampur College (Roll. Ser N 2) |
| 1040 | Ohol, M B | St Paul's College |
| | Pakhira, Amarnath | Scottish Churches College |
| | Pakrasi, Hiralal | Ditto |
| | Pal, Amulyaratan | Chittagong College |
| | Bishnupada | Scottish Churches College |
| | Dhirendranath | South Suburban College, Bhowanipur |
| | Haricharan | Hindu Academy, Daulatpur |
| | Indubhushan | Vidyasagar College |
| | Jatindranath | Victoria College, Comilla (Roll Com N 10) |
| | Jogendranath | Victoria College, Comilla |
| 1050 | " Jogeschandra, II | Bangabasi College |
| | Karunacharan | Hughli College |
| | Kshirodchandra | City College, Calcutta |
| | Nagendranath | Krishnagar College |
| | Nirmalchandra | A M College, Mymensingh |
| | Rajmohan | Victoria College, Comilla (Roll Com N 19) |
| | Saratchandra | Non collegiate student (Roll Far N 7) |
| | Syamakanta | Carmichael College, Rangpur |
| | Palchaudhuri, Mohinimohan | Bangabasi College |
| 1060 | " Narendrakisor | Ditto |
| | Panigrahi, Basantakumar | City College, Calcutta |
| | Pathakota Brahmanaiya | Bangabasi College |
| | Poddar, Baradacharan | Scottish Churches College. |
| | " Sasadhar | K N College, Berhampur |
| | Phulchand Prasad | City College, Calcutta |
| | Pradhan, Bhubanchandra | Non collegiate student, Roll Cal N 184 (City College, Calcutta) |
| | Pramanik, Dakshinaranjan | City College, Calcutta |
| | " Manikuddin | Rajshahi College. |
| | " Radharaman | Krishnagar College |
| | " Satyanaran | Ripon College |
| 1070 | P. R Kameswara Rau | Non-collegiate student (Roll Cal N 40). |
| | Putatunda, Madhusudan | South Suburban College, Bhowanipur. |
| | Qazi Abdul Bari | City College, Calcutta |
| | Rafayetulla Sarkar | Carmichael College, Rangpur |
| | Rafiuddin Ahamed | Krishnagar College (Roll Kri N 2) |
| | Raha, Phanindrabijay | Chittagong College |
| | Raisuddin Ahamed | Carmichael College, Rangpur |
| | Rajkhowa, Alokchandra | Cotton College, Gauhati. |
| | Rakshit, Nibaranchandra | Carmichael College, Rangpur |
| | " Umeschandra | Ditto. |
| 1080 | Raut, Amulayacharan | Ripon College. |
| | Ray, Ajitkumar | Ditto. |

| | | |
|---|---|---|
| | Ray, Anantakumar | Scottish Churches College. |
| | ,, Atulchandra, I | Victoria College, Cooch Behar (Roll Baul N 2) |
| | ,, Atulchandra, II | Victoria College, Cooch Behar (Roll Coo N 8) |
| | ,, Bankimchandra | Scottish Churches College |
| | ,, Bharatchandra | A M College, Mymensingh |
| | ,, Bharatchandra | Vidyasagar College |
| | ,, Bibhutibhushan | Bangabasi College. |
| | ,, Bidhubhushan | M C College, Sylhet |
| 1090 | ,, Bimlananda | Sanskrit College. |
| | ,, Binaybhushan | Hindu Academy, Daulatpur |
| | Brajeswar | City College, Calcutta. |
| | Chandramohan | South Suburban College, Bhowanipur |
| | Debeschandra | Vidyasagar College. |
| | Dhirendranath | K N College, Berhampur. |
| | Dineschandra | City College, Calcutta |
| | Hemendranarayan | A M. College, Mymensingh |
| | ,, Hrishikes | Non-collegiate student, Roll Cal N 81. |
| | ,, Indramohan | Non-collegiate student, Roll Dac. N 4 |
| 1100 | ,, Indranarayan | Vidyasagar College |
| | ,, Jasodakumar | A M College, Mymensingh |
| | Jatadhar | K N College, Berhampur |
| | Jogeschandra | Hindu Academy Daulatpur. |
| | Jyotibhushan | Vidyasagar College |
| | Kalidas | Rajshahi College |
| | Kalipada | Non collegiate student, Roll Cal. N 102 |
| | Kaliprakas | Carmichael College, Rangpur |
| | ,, Kamalkumar | Victoria College, Comilla. |
| | ,, Kartikchandra | City College, Calcutta |
| 1110 | ,, Kshitischandra | Ditto. |
| | ,, Kumar Nalinaksha | Presidency College |
| | ,, Madhurilata | Bethune College |
| | ,, Manindrachandra | Non-collegeate student, Roll Cal N 149 (Ripon College) |
| | ,, Manindranath | Non-collegeate student, Roll Cal. N 167 (South Suburban College, Bhowanipur). |
| | ,, Manindranath | K N College, Berhampur |
| | ,, Manomohan | Victoria College, Cooch Behar |
| | ,, Nagendrakisor | A M College, Mymensingh |
| | ,, Nalinikanta | Rajshahi College |
| | ,, Niradranjan | Chittagong College |
| 1120 | ,, Paresnath, I | City College, Calcutta |
| | ,, Paresnath | Vidyasagar College |
| | ,, Prabodhchandra | Chittagong College |
| | ,, Probodhchandra | K N College, Berhampur. |
| | ,, Pramadakanta | A M. College, Mymensingh |
| | Prankumar | Ditto. |
| | Purnachandra | Victoria College, Comilla |
| | Rabindranath | Scottish Churches College. |
| | Rabindranath | Vidyasagar College |
| | Rakhalchandra | City College, Calcutta |
| 1130 | ,, Ramnarayan | Ditto |
| | Saratchandra | Serampur College |
| | Satyadas | Vidyasagar College |
| | Satyendranath | Brajamohan College Barisal |
| | Sibendranath | K N College, Berhampur. |
| | Subodhchandra | Rajshahi College |
| | Subodhchandra | Vidyasagar College. |
| | Sudhansubhushan | Carmichael College, Rangpur. |
| | Sudhirkumar | K. N College, Berhampur |
| | Sudhirnath | A. M. College, Mymensingh |
| 1140 | ,, Suhridkrishna | St Xavier's College |
| | Sukumar | Victoria College, Comilla |
| | Surendranath | Ripon College. |
| | Sureschandra | Bangabasi College |
| | Trailokyanath | Rajendra College, Faridpur |
| | Triptibala | Bethune College |
| | Tulsicharan | City College, Calcutta. |
| | ,, Upendranath | K N. College, Berhampur. |
| | Raybarman, Sureschandra | Victoria College, Cooch Behar |
| | Raychaudhuri, Bimalaranjan | Ripon College |
| 1150 | ,, Binaybhushan | Brajamohan College, Barisal (Roll Bar. N 6). |
| | Debendrakumar | Victoria College, Comilla. |
| | Dwijendrakumar | Scottish Churches College. |
| | Jnanendrachandra | Carmichael College, Rangpur (Roll Rang N 4). |
| | Kusumesu | South Suburban College, Bhowanipur. |
| | Nanigopal | St Paul's College. |
| | Niradkali | South Suburban College, Bhowanipur. |
| | Nirmalchandra | Ripon College. |
| | Phanindrakumar | City College, Calcutta. |
| | Sudhansubhushan | Serampur College. |
| 1160 | ,, Sureswar | Ripon College. |

| | | |
|---|---|---|
| | [illegible] | ... Rajshahi College. |
| | [illegible] | ... Diocesan College. |
| | [illegible] | ... Victoria College, Comilla. |
| | [illegible] | ... Rajshahi College. |
| | [illegible]kumar | ... City College, Calcutta. |
| | [illegible]bar | ... Non-collegiate student, Roll Dac. N 16 |
| | [illegible]lal | ... City College, Calcutta. |
| | Sabendrachandra | ... Vidyasagar College. |
| | Satindranath | ... Bangabasi College |
| 1170 | Satindranath | ... Carmichael College, Rangpur. |
| | Kalipada | ... City College, Calcutta. |
| | Krishnalal | ... Rajshahi College |
| | Kshetramohan, II | ... Victoria College, Comilla. |
| | Lalitkumar | ... Vidyasagar College. |
| | Madanmohan | ... Scottish Churches College. |
| | Makhanlal | ... Non-collegiate student. Roll Cal N 185 (City College. Calcutta). |
| | Mahimchandra | ... Victoria College, Comilla (Roll Com N 18) |
| | Mahimchandra | ... A. M College, Mymensingh. |
| | Mukundachandra | ... South Suburban College, Bhowanipur |
| 1180 | Panchanan | ... Victoria College, Comilla (Roll Com. N 9). |
| | Phanibhushan | ... Vidyasagar College. |
| | Prasannakumar | ... Victoria College, Comilla (Roll Com N 21) |
| | Srinathchandra | ... Victoria College, Comilla. |
| | Sudhirkumar | ... Scottish Churches College. |
| | Surendrachandra | ... Victoria College, Comilla. |
| | Upendranath | ... Rajendra College, Faridpur |
| | Sahachaudhuri, Indubhushan | ... Non-collegiate student, Roll Cal N 94 (Vidyasagar College) |
| | Saikia, Sadananda* | ... Cotton College, Gauhati. |
| | Saleque Uddin Ahmed | ... Carmichael College Rangpur (Roll Rang N 14). |
| | Samaddar, Kshirodlal | ... South Suburban College, Bhowanipur. |
| 1190 | Samanta, Banbihari | ... Bangabasi College |
| | Birendranath | ... Non-collegiate student, Roll Cal. N 19 |
| | Dibakar | ... K. N. College, Berhampur |
| | Sanyal, Atuleswar | ... A M College, Mymensingh |
| | Bimalkrishna | ... City College, Calcutta. |
| | Haripada | ... Non-collegiate student, Roll Cal N 211 (Vidyasagar College). |
| | Kalidas | ... Krishnagar College |
| | Kalikamal | ... Rajshahi College. |
| | Manomohan | ... St. Xavier's College. |
| | Phanibhushan | ... K N College, Berhampur. |
| 1200 | Sailajakumar | ... Non-collegiate student, Roll Cal. N 90. |
| | Surendrakumar | ... Rajshahi College |
| | Sanwaruddin Ahmed | ... Krishnagar College |
| | Sanyalchaudhuri, Sachchidananda | ... Ripon College |
| | Sarbajna, Jitendranath | ... South Suburban College, Bhowanipur |
| | Sarder Asmat Ali | ... Brajamohan College, Barisal. |
| | Sarkar, Anathbandhu | ... City College, Calcutta |
| | Banamadhab | ... Rajshahi College |
| | Baradacharan | ... Bangabasi College |
| | Basantakumar | ... A M. College, Mymensingh |
| 1210 | Bibhutibhushan | ... Vidyasagar College. |
| | Bijaykrishna | ... Carmichael College, Rangpur. |
| | Binaykumar | ... Vidyasagar College |
| | Gajendrachandra | ... Ripon College |
| | Gaurchandra | ... Ditto. |
| | Himani | ... Bethune College |
| | Himansukumar | ... Scottish Churches College. |
| | Jadulal | ... Non-collegiate student, Roll Cal. N 152 (Ripon College) |
| | Jadunath | ... K. N College, Berhampur. |
| | Jagadischandra | ... City College, Calcutta. |
| 1220 | Jatindranath | ... Rajshahi College. |
| | Jitendranath | ... Serampur College |
| | Jitendranath | ... Ripon College |
| | Jogendranath | ... Non-collegiate student. Roll Cal N 95 (Vidyasagar College) |
| | Kriparam | ... Vidyasagar College. |
| | Kshitischandra | ... Non-collegiate student, Roll Cal. N 150 (Ripon College) |
| | Kumarkrishna | ... Rajshahi College. |
| | Manimohan | ... Ripon College. |
| | Manindrachandra | ... Rajshahi College |
| | Manmathanath | ... Krishnagar College. |
| 1230 | Mira | ... Non-collegiate student, Roll Cal F N 4 |
| | Narendranath | ... Wesleyan College, Bankura. |
| | [illegible] | ... Carmichael College, Rangpur. |
| | [illegible] | ... Wesleyan College, Bankura. |
| | [illegible] | ... South Suburban College, Bhowanipur. |
| | [illegible] | ... Carmichael College, Rangpur. |

* [illegible], Cotton College, Gauhati.

| | | |
|---|---|---|
| | Sarkar, Suprakas | ... Ripon College. |
| | " Bagasuddain | ... City College, Calcutta. |
| | Sarma, Bipinchandra | ... Non-collegiate student, Roll Syl. N 1. |
| | " Nabinchandra | ... Cotton College, Gauhati. |
| 1240 | " Purnachandra* | ... Ditto. |
| | Sarmadaloi, Udaychandra | ... Ditto. |
| | Sayed Md. Izharul Haque | ... Non-collegiate student, Roll Cal. N 97 |
| | Sayed Md. Sajjad | ... Ripon College. |
| | Sen, Anilkrishna | ... City College, Calcutta. |
| | " Bimalchandra | ... Chittagong College (Roll Chi. N 3). |
| | " Haripada | ... Wesleyan College, Bankura. |
| | " Kalimohan | .. Victoria College, Comilla. |
| | " Kisorimohan | ... Bangabasi College. |
| | " Lakshmikumar | ... Non-collegiate student, Roll Chi. N 4. |
| 1250 | " Lalitmohan | ... Scottish Churches College. |
| | " Nagendranath | ... Hindu Academy, Daulatpur. |
| | " Nirupama | ... Diocesan College. |
| | " Nripendranath | .. A M. College, Mymensingh. |
| | " Nripendranath | ... Scottish Churches College. |
| | " Pratibha | ... Bethune College. |
| | " Sachindrachandra | ... City College, Calcutta |
| | " Saileschandra | ... K N College, Berhampur. |
| | " Satischandra | ... Vidyasagar College |
| | " Sibaranjan | ... City College, Calcutta. |
| 1260 | " Sobhendrachandra | ... Non-collegiate student, Roll Cal. N 29 (Sanskrit College). |
| | " Sudhindranath | ... Carmichael College, Rangpur. |
| | " Sudhirkumar | ... Hindu Academy, Daulatpur |
| | " Sudhirkumar | ... South Suburban College, Bhowanipur. |
| | " Surendranath | .. Hindu Academy, Daulatpur. |
| | " Umeschandra | ... K M. College, Berhampur. |
| | Senapati, Mahimchandra | ... A. M. College, Mymensingh |
| | Sengupta, Akhilananda | ... Ripon College. |
| | " Arubala | ... Bethune College |
| 1270 | " Aswinikumar | ... Victoria College, Comilla. |
| | " Bimalchandra | ... Brajamohan College, Barisal |
| | " Bhupendranath | ... City College, Calcutta |
| | " Debendranath | ... Ripon College |
| | " Gopalchandra | ... Non-collegiate student, Roll Bar N 2. |
| | " Hiralal | .. City College, Calcutta. |
| | " Jatischandra | ... South Suburban College, Bhowanipur |
| | " Kshitindranath | Ditto |
| | " Kshitischandra | ... St Xavier's College. |
| | " Nagendranath, I | ... Brajamohan College, Barisal |
| 1280 | " Nagendranath | ... Brajamohan College, Barisal (Roll Bar N 5) |
| | " Niradbihari | ... Brajamohan College, Barisal. |
| | " Pareschandra | ... Victoria College, Cooch Behar |
| | " Phanindranath | ... Non-collegiate student, Roll Cal. N 141 (Ripon College) |
| | " Rabisadhan | ... Non-collegiate student, Roll Cal. N 45 (Vidyasagar College) |
| | " Rajendranath | ... Brajamohan College, Barisal. |
| | " Rameschandra | ... South Suburban College, Bhowanipur |
| | " Sachindranath | ... Non-collegiate student, Roll Cal N 170 (City College, Calcutta). |
| | " Sureschandra | ... Carmichael College, Rangpur |
| | Shahabuddin Ahmed | ... Non-collegiate student, Roll Cal. N 197 (City College, Calcutta). |
| 1290 | Shaikh Abdul Gani | ... Ripon College |
| | " Afiluddin Ahmed | ... City College, Calcutta. |
| | " Enamul Kibria | ... Ripon College. |
| | " Kader Bukhsh | ... Rajshahi College. |
| | " Lutfar Rohoman | ... Hughli College |
| | " Maniruddin | ... Carmichael College, Rangpur |
| | " Naseruddin | ... Rajshahi College |
| | " Wahazuddin | ... Ditto |
| | " Zahadur Rohman | ... St. Xavier's College |
| | Shamsul Haque† | ... Bangabasi College. |
| 1300 | Sharfuddin Haider | ... Non-collegiate student, Roll Cal. N 229 (Presidency College). |
| | Sheodulatey Trivedi | ... Non-collegiate student, Roll Cal. N 56 (Vidyasagar College). |
| | Shukla, Puranchandra | ... Scottish Churches College. |
| | Siddhanta, Parimal | ... Bethune College. |
| | Sikdar, Radhanath | ... Ripon College |
| | " Rohinikumar | ... Brajamohan College, Barisal |
| | Sikder Ali | ... Victoria College, Comilla. |
| | Sil, Ambikacharan | ... Chittagong College. |
| | " Jatindranath | ... K. N College, Berhampur |
| | " Trailokyanath | ... Non-collegiate student, Roll Dac. N 21. |

* Ex-student, Cotton College, Gauhati.
† Ex-student.

| | | |
|---|---|---|
| 1310 | Sil, Umeschandra | ... Presidency College. |
| | Sing, Rajkumar Atompisak | ... Cotton College, Gauhati (Roll Gau. N 6). |
| | Singh, Jayagobind | ... Non-collegiate student, Roll Cal. N 157 (Ripon College). |
| | " Protivabala | ... Bethune College. |
| | Sinha, Hariharprasad | ... Bangabasi College. |
| | " Asutosh | ... Non-collegiate student, Roll Cal N 106 (St Paul's College). |
| | " Bhabanicharan | ... Non-collegiate student, Roll Cal N 78. |
| | " Bhujangabhushan | ... K N College, Berhampur |
| | " Bibhutibhushan | ... South Suburban College, Bhowanipur. |
| | " Dwijendrakumar | ... City College, Calcutta. |
| 1320 | " Hrishikes | .. K N College, Roll Ber. N 13 |
| | " Jnanendrachandra | ... Scottish Churches College. |
| | " Jogeschandra | ... Ditto |
| | " Krishnachandra | ... Ripon College |
| | " Manindranath | ... Non-collegiate student, Roll Cal. N 214. |
| | " Manmathanath | ... South Suburban College, Bhowanipur |
| | " Nanigopal | ... K N. College, Berhampur. |
| | " Narendranath | ... Ditto. |
| | " Nrisinhakumar | .. Ditto. |
| | " Prabodhchandra | ... Rajshahi College (non-collegiate student). |
| 1330 | " Pramathnath | ... Brajamonan College, Barisal |
| | " Ramanimohan | .. Non-collegiate student, Roll Cal N 76. |
| | " Rameschandra | ... K. N College (Berhampur). |
| | " Ranjit | ... Ditto. |
| | " Satisaram | ... Vidyasagar College |
| | " Sudhendumohan | ... A. M College, Mymensingh |
| | " Sukhendramohan | ... K N. College, Berhampur |
| | Sinhabiswas, Kumarischandra | ... South Suburban College, Bhowanipur |
| | Sinhachaudhuri, Niradgopal | .. K. N. College, Berhampur. |
| 1340 | Sinharay, Girijalal | ... Rajendra College, Faridpur. |
| | Sarkar Daw, Hemantakumar | ... Wesleyan College, Bankura. |
| | Siromani, Pramadanath | ... Rajshahi College. |
| | Som, Amiyakumar | ... Victoria College, Comilla (Roll Com N 8) |
| | " Nripendrachandra | ... Non-collegiate student, Roll Cal N 147 (Ripon College) |
| | Sundarlal Arora | .. Vidyasagar College. |
| | Sur, Bisweswar | .. Hughli College. |
| | " Debendranath | ... Vidyasagar College |
| | " Harischandra | ... Victoria College, Comilla. |
| | Suruj Meah | ... Ditto |
| | Syam, Abanikanta | ... Vidyasagar College. |
| 1350 | Syed Abdul Halim | ... Bangabasi College |
| | " Abdur Rouf | ... Hindu Academy, Daulatpur |
| | " Afzal Nawab | ... Ripon College |
| | " Hasan | ... City College, Calcutta |
| | " Mohammad Elias | .. Presidency College |
| | Tagore, Jyotiranjan | ... Carmichael College, Rangpur |
| | Tahiruddin Khan | ... A. M. College, Mymensingh. |
| | Tajuddin Ahmed, II | ... Rajshahi College (non-collegiate student). |
| | Talapatra, Aswinikumar | ... Victoria College, Comilla. |
| | Taraphdar, Binaykrishna | ... Non-collegiate student, Roll Cal. N 180 (City College, Calcutta) |
| 1360 | " Gajendranath | ... Rajshahi College. |
| | Tasimuddin Ahmed | ... Ripon College |
| | Taslimuddin Ahamed | ... Rajshahi College non collegiate student). |
| | Tawary, Sivakumar | ... K N College, Berhampur |
| | Thakurta, Sachindramohan | ... Ripon College. |
| | Thomas, C V. | ... St. Paul's College. |
| | " V. G. | ... Serampur College. |
| | U Borsingh Gympad | ... Scottish Churches College. |
| | Ubedur Rohman | ... M. C College, Sylhet. |
| | Umapati Trivedi | .. Non-collegiate student, Roll Cal. N 122 (Scottish Churches College). |
| 1370 | Wahed Ali | ... Victoria College, Comilla. |
| | Wasilali | ... Citty College, Calcutta |
| | Yunas, Baharan B. | ... St. Paul's College. |
| 1373 | Zainuddin Ahmad | ... St Xavier's College. |

The undermentioned candidates, who were permitted to appear at the last B. A. Examination in one or more subjects, are declared to have passed :—

ENGLISH.

| | |
|---|---|
| Lalji Sahai | ... Non-collegiate student, Roll Cal N 57. |
| Thakur Sivanandan* | ... Non-collegiate student. Roll Cal. N 65. |

ENGLISH AND BENGALI.

Bandyopadhyay, Keshabchandra ... Non-collegiate student, Roll Cal. N 7

Datta, Herambalal* ... Non-collegiate student, Roll Cal. N 241

ENGLISH AND NEPALESE

Dikshit, Narendramani A* ... Non-collegiate student, Roll Cal. N 88.

ENGLISH AND URDU

Mohammad Ishaque ... Non-collegiate student, Roll Cal N 168.

ECONOMICS

Das, Sailéskumar ... Non-collegiate student, Roll Cal. N 138

SENATE HOUSE, *the 16th July, 1923* A. C. BOSE, *Controller of Examination.*

## EDUCATION DEPARTMENT, BENGAL.

### NOTIFICATION.

The undermentioned candidates are awarded Post-graduate scholarships for one year in the first instance, with effect from 1st July 1923:—

| Serial No | Names of scholars | Value of scholarships. | Subject of researches | Place of work. |
|---|---|---|---|---|
| | | Rs. | | |
| 1 | Babu Tarapada Bhattacharji, M.A | 100 | Archæology with special reference to the subject of the development of pillars in India. | Varendra Research Society, Rajshahi. |
| 2 | „ Kalipada Biswas, M A ... | 100 | Botany with special reference to the subject of Algology. | University College, Calcutta. |
| 3 | „ Dhirendra Chandra Roy, M.Sc. | 100 | Chemistry with special reference to the subject of Dyes | Dacca University |

E. F. OATEN,

*Assistant Director of Public Instruction, Bengal.*

CALCUTTA, *the 16th July, 1923.*

The following candidates have passed the Higher Madrasah Standard (Senior Fifth Year Class) Examination held in March 1923 and are placed in order of merit.

**Calcutta Madrasah.**

*First Division.*

1 Ashabuddin Ahmad (awarded First Scholarship of Rs. 15).
2 Md. Zubair (awarded Second Scholarship of Rs. 15).
3 Abdul Jabbar Rabbani.
4 Md. Mohiuddin (English)
5 Syed Abu Daud (English)
6 Sultan Alam
7 Abul Hayat Abdul Muqtadir (English)
8 Ahmad Khan.
9 Md. Mutiur Rahman (English)
10 Md. Azizullah
11 Abdul Ghani
12 Md Faiz Bakhsh
13 Md. Nurul Islam (English).
14 Md. Abdul Hai
15 Md. Abdur Rouf (English)

*Second Division*

1 { Abul Khair Muhammad Ali Akbar
  { Md. Mukhlisur Rahman.
3 Md Lutfur Rahman (English)
4 Md Abdur Rahman (English)
5 Md Akram Abdul Qadir (English)
6 Maqbul Ahmad
7 Tajammul Husain

*Third Division*

1 Md Serajul Hoq, II
2 Md. Ashraf Ali.
3 { Md Serajul Hoq, III.
  { Md Sajjad.
5 Khondkar Bazlur Rahman
6 Md. Abdul Latif
7 Muhammad Arif
8 Md Sadiq Ali
9 Md. As-adur Rahman (English)
10 Abdul Wahid
11 Abul Hasan Md Zain-ul-abedin
12 { Ramizuddin, II.
  { Badruddin Ahmad (English)

**Private Candidates (Calcutta Centre).**

*Third Division*

1 Md Kalimullah
2 Md Luqman Siddiqi

**Sasaram Madrasah.**

*First Division*

1 Md. Azizuddin.
2 Md Alimuddin

**Hooghly Madrasah.**

*First Division*

1 Syed Nurul Haq (English) (awarded Third Scholarship of Rs 15)
2 Mazhur Ahmad (awarded Fourth Scholarship of Rs. 15).
3 Md. Riajuddin.
4 Md. Husainuddin.
5 Md Shahabuddin (English).

*Second Division*

1 Syed Muhammad (English)

**Phurphura Madrasah.**

*Third Division*

1 Md. Lehazuddin

**Chittagong Darululum Madrasah.**

*First Division*

1 Md. Abul Khair.
2 Md. Ali Husain.
3 Ahmad
4 Md Hashmatullah

*Second Division.*

1 Md Ismail.
2 Md. Mukarram Ali
3 Md. Mabarrak Ali.
4 Abul Bashar
5 Nur Ahmad

*Third Division*

1 Abdul Hakim, II
2 Md. Karimullah.
3 Abdul Qadir.
4 Fazlul Kabir.

J. M. BOTTOMLEY, *Registrar,*
*Central Examination, Bengal Madrasahs.*

THE following candidates have passed the Lower Madrasah Standard (Senior Third Year Class Examination held in March 1923 and are placed in order of merit :—

**Calcutta Madrasah.**

*First Division.*

1 Sultan Mahmud
2 Md. Fazlul Haq.
3 Mohibullah.
4 Md. Abdus Sattar.
5 Abdul Jalil Khan
6 Abdus Sabur.
7 Syed Md Janab Ali.
8 Md. Fazlul Karim
9 Md. Idris
10 Md. Salamatullah.
11 Syed Fakhruddin.
12 Md Abdul Hai, I.
13 Md. Sarajul Haq, II.
14 Mansur Ahmad

*Second Division*

1 Md. Abdul Aziz.
2 Md. Jamaluddin Siddiqui
3 Md Gholam Rahman.
4 Mazharul Haq.
5 Maqbul Ahmad.
6 Md Yusuf (Section A)
7 Md Yusuf.
8 Md Serajul Haq, III.
9 Md. Ibrahim
10 Md. Imam Husain
11 Abu Said Md Habibullah
12 Md. Abdul Latif, I
13 Ahmad Hosain
14 Md Habibullah, II

*Third Division.*

1 Abdur Rahman
2 Md. Hanif.
3 Abu Tahir
4 Md. Is-haq, I.
5 Md. Zahurul Haq
6 { Nurul Huda. / Md. Abdul Mannan Chaudhury.
8 Md. Zafar Husain.
9 Syed Abush-Shams Md Salih Ahmad.
10 { Syed Abul Ma'ali. / Qazi Shamsuzzuha.
12 Abu Sa'id Ahmad
13 { Md Nadiruzzaman. / Abul Barkat Md Mobarak Ali.
15 Md Mufizuddin.

**Private candidates (Calcutta Centre).**

*Second Division*

1 Mazharul Islam

*Third Division.*

1 Abul Fath Md Ali Husain
2 Md. Abdul Jabbar.

**Sasaram Madrasah.**

*Second Division.*

1 Md Khalilur Rahman

*Third Division.*

1 Md. Mahmud Alam.
2 { Md. Zakariya. / Md. Mahfuz Ahmad
4 Syed Shah Md. Wajihuddin.
5 Md. Riazuddin.
6 Syed Abdul Majid.
7 Syed Izhar Husain

**Phurphura Madrasah.**

*First Division.*

1 Serajul Haq.

*Third Division.*

1 Nazir Husain

**Chittagong Darululum Madrasah.**

*First Division.*

1 Md. Abdul Haq.
2 Abdul Malik.
3 Serajul Haq.
4 { Habibur Rahman, I / Md. Ishaq, II.
6 Mustafizur Rahman.
7 Abul Muzaffar Md. Rashid Ahmad.
8 Shafiqur Rahman.
9 Farrukh Ahmad, I.
10 Abdul Muttalib.

*Second Division*

1 Abdul Hai.
2 Abdullah.
3 { Farrukh Ahmad, II.
  { Mutiur Rahman
5 Abdul Qayyum.
6 Nesarul Haq.

*Third Division.*

1 { Salimullah.
  { Faiz Ahmad.
3 Akbar Ahmad.
4 Habibur Rahman, II.
5 Mujibullah.
6 Aminullah.
7 Imdadul Haq, II.
8 Rahmatullah.
9 Nur Ahmad, II.
10 Nazir Ahmad

J. M. BOTTOMLEY, *Registrar,*
*Central Examination, Bengal Madrasahs.*

---

THE following candidates have passed the Lower Madrasah Standard (Senior Second Year Class) Examination held in March 1923, and are placed in order of merit :—

**Serajganj Madrasah.**

*First Division*

1 Khondker Md Abdul Hamid

*Second Division.*

1 Md Jamaluddin

*Third Division.*

1 Md Jasimuddin

**Hammadiah Madrasah, Dacca.**

*First Division*

1 Abul Qasim Md Abdul Karim.
2 Md Nurul Islam
3 Md Abdul Jalil

*Second Division*

1 Serajuddin Ahmed
2 Md Umed Ali.
3 Md Bashirullah
4 Md Yusuf, I.
5 Md. Yakub

*Third Division*

1 Md Abdul Alim Mian
2 Md. Yusuf, II.
3 Md. Abdul Jabbar Bhunya
4 Abul Mahasin Md Fazlul Haq.

**Bashiriah Ahmadiah Madrasah.**

*First Division*

1 Aftabuddin Ahmad.
2 Mir Md. Muinuddin.
3* Ifazuddin Ahmad.
4 Md Mufazzalur Rahman.
5 Md. Ali Ahmad

*Second Division*

1 Nurul Huda.

*Third Division.*

1 Md. Ibrahim.
2 Md. Azizur Rahman
3 Abulula Shamsul Islam
4 Md Aminulla, I.
5 Amir Bakhsh.

**Dacca Darululum Madrasah.**

*Second Division.*

1 Md. Luqman Hakim.
2 Md Yunus

*Third Division*

1 Md. Manzur Ali.

J. M. BOTTOMLEY, *Registrar,*
*Central Examination, Bengal Madrasahs.*

THE following candidates have passed the Higher Madrasah Standard (Senior Fourth Year Class) Examination held in March 1933 and are placed in order of merit:—

**Sitakund Madrasah.**

*First Division.*

1 As'adul Haq.

*Third Division.*

2 A K M. Lutfur Rahman.

**Serajganj Madrasah.**

*First Division*

1 Md. Ashraquddin

*Second Division*

1 Md Nurul Haq | 2 Md Abdul Qadir

*Third Division.*

1 Md. Abbas Ali. | 2 Md Abdul Hamid.

**Hammadiah Madrasah, Dacca.**

*First Division.*

1 Mahmudullah.
2 Rashid Ahmad.
3 Md. Ibrahim.
4 Md. Ghafran
5 Md. Nawab Ali.

*Second Division*

1 Md. Mazharul Islam. | 2 Md Abdul Wahhab.
3 Md. Abdus Subhan

*Third Division.*

1 Md. Waliullah
2 Md Muhabbat Ali.
3 Md. Abdus Samad.
4 Md Husain Ali
5 Md. Abdul Wahid
6 Md. Habibullah.
7 Md Shamsul Haq

**Bashiriah Ahmadia Madrasah.**

*Second Division.*

1 Abdur Rahman. | 2 Md. Shamsul Huda.

*Third Division.*

1 Md. Habibullah.

**Darululum Madrasah, Dacca.**

*Second Division.*

1 Md. Yunus.

*Third Division.*

1 Abdul Jabbar. | 2 Muhammad Ali.

J. M. BOTTOMLEY, *Registrar,*
*Central Examination, Bengal Madrasahs.*

# The Calcutta Gazette

WEDNESDAY, JULY 18, 1923.


## PART II.

### *Advertisements.*

### LAND SALE NOTICES.

#### Advertisement of sale.

NOTICE is hereby given that the undermentioned plots of land, no longer required by Government, situated along the Assam Bengal Railway, in the district of Mymensingh, will be put up to sale at 12 o'clock, on the 30th August 1923.

The purchasers of the several plots of land will be subject to the following conditions —

*1st* —The purchasers will have no power to make any excavations on the land nearer than fifteen feet from the railway boundary, or to plough the land nearer than three feet from the same

*2nd* —If the amount of purchase money does not exceed Rs 100, the whole amount must be paid down at once

*3rd* —If the amount of purchase-money exceed Rs 100, one fourth of the amount must be immediately deposited If the balance be not paid by noon of the fifteenth day after the sale, reckoning the day of sale as one or if that day be a close holiday, then by noon of the first succeeding office day, the sale shall be cancelled, the sum deposited being forfeited to Government, and the lot again put up for sale at the risk of the defaulting purchaser, after issue of advertisement, as in the case of original sale

*4th* —The plots of land will be sold revenue-free to the highest bidders.

*5th* —The sale will become final on receipt by the Collector of the orders of the Commissioner confirming it, and a regular conveyance will then be granted to the purchaser.

| 1 | 2 | 3 | 4 | 5 | 6 | | 7 | | 8 | 9 |
|---|---|---|---|---|---|---|---|---|---|---|
| Consecutive lot No. | Name of district | Pargana and mauza | Number of mile on which land is situate. | Situated on which side of the railway | APPROXIMATE AREA OF LOT IN BIGHAS AND IN ACRES. | | LAND EXCLUDED FROM SALE FROM EACH LOT | | Commencement and termination of lot. | Boundary of lot |
| | | | | | B. K. C. | Acres and decimals. | Reasons for exclusion. | Acres and decimals | | |
| 1 | Mymensingh.. | Pargana Mymensingh, mauza Char Iswardia | | On the northern side of Assam-Bengal railway at Jogendranagar jute siding | | 0·0689 | .. | | | *North*—By settlement plot No 2107 and lands of Kangugain and Jogar Mea<br>*East*—By settlement plots Nos 2174 and 2175 and lands of Rowan Sheik and Sonai Bibi<br>*South and West*—By settlement plot No. 2108 and lands of Kutub Moral |

D M SEN, *for* Collector.

Mymensingh Collectorate, the 19th June 1923

## Notification B.

NOTICE is hereby given, under sections 5 and 13, Act XI of 1859, that unless the arrears mentioned below are paid on or before the next latest date of payment, viz., the 28th June 1923, the undermentioned estates or shares of estates in the district of Midnapore will be put up for sale at the office of the Collector of that district on the 26th September, at 12 o'clock for the said arrears.

When in columns 5, 7 and 9 of the following statement it is stated that only a share is to be sold, it is to be understood that a separate account is kept for that share —

| Tauzi No. | Name of mahal and pargana. | Sadar jama of whole estate. | Whether the whole estate is to be sold | If only a share is to be sold, specification of such share or shares. | Names of proprietors of property to be sold. | If only a share is to be sold, the sadar jama of such share. | If the whole estate is to be sold, the arrears due from it. | If only a share is to be sold, the arrears due from it | Nature and amount of demand for which to be sold. |
|---|---|---|---|---|---|---|---|---|---|
| 1 | 2 | 3 | 4 | 5 | 6 | 7 | 8 | 9 | 10 |
| | | Rs A P. | | | | Rs A P | | Rs. A P | |
| 923 | Pargana Kashi jora, mahal Dandeswar. | 1,924 4 0 (including police) | | Reddunry share excluding separate account Nos 1 to 4 only. 5 as 14 gds 2 c. 2 kt share of the mahal will be sold.<br>All other shares than that specified will be excluded from the sale | Gouranga Prasad Bhuian and 7 others | 689 8 6 (including police) | | 307 4 2 | |
| 947 | Pargana Kashi jora, mahal Gograss Patna. | 1,512 2 3 (including police). | | Separate account No 1. 10 as 13 gds 1 c 1 kt share of the mahal will be sold<br>All other shares than that specified will be excluded from the sale | Mr R. K Nag and 5 others | 1,008 1 6 (including police) | | 85 15 0 (January and March 1923), including police | |
| 1466 | Pargana Khandar, mahal Barh Banshi. | 19,085 0 0 | | Residuary share excluding separate account Nos 1 to 20 and 22 to 44 only.<br>The following shares of the mauzas will be sold —<br>A G. C Kt. Dt<br>Mauza—<br>Ashapura 0 4 1 2 1<br>Atmarambarh . 0 8 3 1 2<br>Atmarambarh kismat .. 0 17 3 0 1<br>Astidangor . 0 17 3 0 1<br>Astidangor kismat 0 17 3 0 1<br>Aymachaok 0 6 0 1 1<br>Bankabheri . 0 6 0 1 1<br>Ballavbarh 1 15 2 0 2<br>Bara Chelara 0 8 3 1 2<br>Bagdigeria Saua 1 15 2 0 2<br>Bagdi Palasia 1 15 2 0 2<br>Bagageria . 0 8 3 1 2<br>Bagali chak . 4 5 1 1 0<br>Baghadangor . 0 8 3 1 2<br>Bakhrabadpatra 0 17 3 0 1<br>Barhbansi 1 15 2 0 2<br>Baruachak 1 15 2 0 2<br>Bansukhuria 4 5 1 1 0<br>Bilkunia . 1 15 2 0 2<br>Benode chak 1 5 1 0 1<br>Bishnu Pandit .. 8 3 1 0 2<br>Brindaban chak kismat . 0 1 15 2 2<br>Bharat chak . 0 8 3 1 2<br>Bhim chak . 3 0 0 0 0<br>Bhojraj chak 0 4 1 2 1<br>Chaturbhuj chak 0 8 3 1 2<br>Chandagobra kismat .. 0 8 3 1 2<br>Chand kuri . 0 4 1 2 1<br>Chapsahara 0 4 1 2 1<br>Chenga . 0 17 3 0 1<br>Dalmundan chak 0 8 3 1 2<br>Darhra . 0 4 1 2 1<br>Darara chak kismat 0 4 1 2 1<br>Dwaripatna .. 0 17 3 0 1<br>Dantorda chak 0 4 1 2 1<br>Duria . 0 11 1 0 0<br>Duria chak .. 0 17 3 0 1<br>Eral chak ... 1 5 1 0 1<br>Eral Dakshin ... 0 17 3 0 1<br>Eral kismat 1 5 1 0 1<br>Eral Uttar 1 5 1 0 1<br>Fasil chak . 0 4 1 2 1<br>Gangadasbati kismat . 0 17 3 0 1<br>Gangadas chak. 0 4 1 2 1<br>Ganak chak .. 0 17 3 0 1<br>Gumoriabheri .. 0 6 0 1 1<br>Gomunda chak. 0 6 0 1 1<br>Gopal chak . 0 4 1 2 1<br>Haribarh .. 0 17 3 0 1<br>Harinath chak ... 0 8 3 1 2<br>Hariram ... 0 17 3 0 1<br>Hariram chak . 0 17 3 0 1<br>Hatipatna .. 1 15 2 0 2<br>Hosenpur . 0 17 3 0 1<br>Jal chak ... 0 8 3 1 2<br>Jadu chak 0 17 3 0 1<br>Jamini chak . 0 17 3 0 1<br>Jugalbarh kismat 0 17 3 0 1<br>Juned chak ... 0 17 3 0 1 | Nagendra kumar Nag and 10 others | 937 2 0 | | 113 5 1 (September 1921 to March 1923) | |

| Tauzi No. | Name of mahal and pargana. | Sadar jama of whole estate. | Whether the whole estate is to be sold. | If only a share is to be sold, specification of such share or shares. | Names of proprietors of property to be sold. | If only a share is to be sold, the sadar jama of such share. | If the whole estate is to be sold, the arrears due from it. | If only a share is to be sold, the arrears due from it | Nature and amount of demand for which to be sold |
|---|---|---|---|---|---|---|---|---|---|
| 1 | 2 | 3 | 4 | 5 | 6 | 7 | 8 | 9 | 10 |
| | | Rs. A P. | | A G. C Kt. Dt<br>Mauza— | | | | | |
| 1466 | Pargana Khandar, mahal Barh Bansbi. | 19,085 0 0 | | Jotborh chak 0 4 1 2 1<br>Kalang-Kalbara 3 0 0 0 0<br>Kalagechhia chak 1 15 2 0 2<br>Kanchanpur 1 15 2 0 2<br>Kapasgeria 1 15 2 0 2<br>Kapasgeria kismat . 1 15 2 0 2<br>Kunia chak 0 4 1 2 1<br>Kaldana 0 4 1 2 1<br>Kolanda 1 15 2 0 2<br>Krishnagenia 1 15 2 0 2<br>Kharika 0 4 1 2 1<br>Kharikabarh .. 0 17 3 0 1<br>Kharika chak . 0 4 1 2 1<br>Khandaribheti 0 6 0 1 1<br>Kharan chak 0 4 1 2 1<br>Lal chak 0 4 1 2 1<br>Lawdangra 0 17 3 0 1<br>Luahab 1 15 2 0 2<br>Mabarak chak 1 15 2 0 2<br>Madhuban chak 0 17 3 0 1<br>Mahabat chak 0 17 3 0 1<br>Mahammad Kasim chak ... 1 15 2 0 2<br>Mazafor chak 0 4 1 2 1<br>Mangalpur 0 17 3 0 1<br>Manahar chak 1 15 2 0 2<br>Masagan 0 17 3 0 1<br>Modinahari chak 0 17 3 0 1<br>Madhabpur 0 17 3 0 1<br>Mahammad Ali chak 0 4 1 2 1<br>Malpari 0 8 3 1 2<br>Malpari chak 0 8 3 1 2<br>Malikara ... 0 4 1 2 1<br>Mamudpur 0 17 3 0 1<br>Mamudabas 0 17 3 0 1<br>Mangiai 1 15 2 0 2<br>Mana chak . 1 5 2 0 1<br>Matkadpur 0 17 3 0 1<br>Matkadpur kismat 0 17 3 0 1<br>Mirza chak 0 17 3 0 1<br>Nayan chak 0 8 3 1 2<br>Nar 0 4 1 2 1<br>Nibra 1 15 2 0 2<br>Nibra chak 1 15 2 0 2<br>Nurmahammad chak .. 1 15 2 0 2<br>Nuna kismat 1 15 2 0 2<br>Nidhua 0 8 3 1 2<br>Nidhua kismat 0 8 3 1 2<br>Nidhua chak 0 8 3 1 2<br>Paramananda chak kismat 0 8 3 1 2<br>Paschimgeria 1 15 2 0 2<br>Pathra chak . 0 17 3 0 1<br>Patna chak 0 6 0 1 1<br>Pindrageria 1 15 2 0 2<br>Pithapur 1 15 2 0 2<br>Pithapurbarh 1 15 2 0 2<br>Pithapura chak 1 15 2 0 2<br>Purbageria 1 15 2 0 2<br>Putrangi 0 17 3 0 1<br>Prasadbarh kismat . 3 0 0 0 0<br>Pratappur 0 17 3 0 1<br>Ratanchack kismat 3 0 0 0 0<br>Rampal chak 1 15 2 0 2<br>Ditto 1 15 2 0 2<br>Salad Bibi chak 1 15 2 0 2<br>Safachar chak . 1 15 2 0 2<br>Safichak 1 15 2 0 2<br>Sarfaraz chak 3 0 0 0 0<br>Saluka kismat 0 4 1 2 1<br>Sanchehara . 0 8 3 1 2<br>Sanschara . 0 4 1 2 1<br>Sahinaspur 0 17 3 0 1<br>Serangachak 0 17 3 0 1<br>Satasi .. 0 17 3 0 1<br>Sikharchak 0 17 3 0 1<br>Subhadra chak 0 17 3 0 1<br>Sujanagor .. 0 17 3 0 1<br>San char kismat 0 4 1 2 1<br>Saula Dakshin . 0 17 3 0 1<br>Shyambhulan chak .. 1 15 2 0 2<br>Taladiha ... 0 6 0 1 1<br>Tulshi chak ... 0 4 1 2 1<br>Teghari Jantalida ... 3 0 0 0 0 | | | | | |

[ILLEGIBLE], *for* Collector

Midnapore, the 17th May 1923

**List of unclaimed documents of the Calcutta Registry Office for the year 1920 for destruction under section 25 of Act XVI of 1908.**

| Serial No. | Names of parties: Claimant. | Names of parties: Executant. | Nature of document | Number of document in Register | Book. | Volume. | Pages. | Date of— Completion of registration. | Date of— Refusal |
|---|---|---|---|---|---|---|---|---|---|
| | | | | | | | | 1920 | |
| 1 | Bengal Loan Company, Ld | Narendra Nath Bhattacherjee | Mortgage | 56 | I | 3 | 22-26 | 8th Jan. | |
| 2 | Bholaram Meeseaddee and another. | Gora Chand Mullick and others | T Lease | 159 | I | 8 | 31-36 | 13th ,, | |
| 3 | Jamna Das Mandra and another | Maharaj Kumar Dharendra Krishna Deb | Do. | 212 | I | 33 | 40-47 | 14th ,, | |
| 4 | Amtoollatal | Asghurbhai Alibhai | Settlement | 251 | I | 36 | 89-97 | 17th ,, | |
| 5 | Narendra Nath Chatterjee | Hari Charan Dey Sarkar | Release | 301 | I | 26 | 96-103 | 20th ,, | |
| 6 | Kalsar Mirza | Mahunda Dai | Agreement | 96 | IV | 5 | 33 34 | 20th ,, | |
| 7 | Panchoo Das Bos | A. K. Co., Ltd., and others | Security Bond | 109 | IV | 6 | 36-37 | 21st ,, | |
| 8 | Ram Sundar Misser | Sm Lakhpati Thakurani | T Lease | 418 | I | 46 | 13-15 | 27th ,, | |
| 9 | Ram Prosad Sonee and another | Satish Chandra De and others | Indemnity Bond | 657 | I | 11 | 127-130 | 7th Feb. | |
| 10 | Ghursoo Narain Barma | Hari Ahir | Sale | 242 | IV | 6 | 46-47 | 9th ,, | |
| 11 | Seth Raghunath Prosad Poddar and others. | Hari Ram Didwania | Mortgage | 735 | I | 36 | 139-147 | 12th ,, | |
| 12 | | Abdul Karim | Declaration of Trade mark | 318 | IV | 7 | 96-99 | 20th ,, | |
| 13 | Aga Hashar Kashmiri | Bungsidhar Khettry | Reconveyance | 349 | IV | 8 | 92-97 | 24th ,, | |
| 14 | Abdulla Mullick and another | Nalin Chandra Dey | T. Lease | 1114 | I | 29 | 178 180 | 26th ,, | |
| 15 | Abdul Hamid Ayumdar | Syed Sakayet Hossain | Sale | 365 | IV | 6 | 71-73 | 27th ,, | |
| 16 | Dr C. W. Maine and another. | Mahmood Jewah Mamoojee | T. Lease | 1211 | I | 57 | 245 254 | 2nd Mar | |
| 17 | Apurba Kristo Mitter and another. | Mahendra Narayan Banerjee and others. | Partnership | 372 | IV | 4 | 141-147 | 2nd ,, | |
| 18 | Deb Jiban Banerjee and another | Jatindra Nath Ghose | Ditto | 455 | IV | 1 | 264-272 | 11th ,, | |
| 19 | Nasir Ahomed and another | Abdul Suttar and another | Agreement | 486 | IV | 6 | 124-126 | 12th ,, | |
| 20 | Jatish Chandra Pal Chowdry | Rakhal Chandra Shau Mandal | Sale | 1510 | I | 27 | 156-159 | 17th ,, | |
| 21 | Jatish Chandra Pal Chowdry | Gaur Chandra Mandal | Transfer of mortgage | 1511 | I | 27 | 160-163 | 17th ,, | |
| 22 | Nut Behari Majumdar | Ganga Charan Nag | Sale | 512 | IV | 6 | 151 152 | 23rd ,, | |
| 23 | Pandit Sunder Lal Misra | Balakiram Kahar | Lease | 1769 | I | 68 | 23 26 | 29th ,, | |
| 24 | Saik Abul Fazal | Gosto Behari Dey | Mortgage | 1809 | I | 52 | 233-242 | 31st ,, | |
| 25 | Pabitra Chandra Singha | Kalyan Chandra Sinha | Sale | 1811 | I | 15 | 268-293 | 7th Apl | |
| 26 | Hara Gobinda Malakar and others | Krishna Behari Gangopadhya | Release | 1902 | I | 77 | 39-41 | 9th ,, | |
| 27 | Bal Kissen Lakshani | Pabitra Chandra Singha | Sale | 2063 | I | 84 | 1-25 | 20th ,, | |
| 28 | Shaikh Isabuddin | Shaik Makdum Baksh and another | Do. | 2185 | I | 92 | 30-33 | 22nd ,, | |
| 29 | Purnendu Narain Singha | Satish Chandra Ghatak | Do | 2179 | I | 63 | 166-168 | 23rd ,, | |
| 30 | Hari Dhone Dutt | Narasinga Das Agarwala | T Lease | 2254 | I | 68 | 174-176 | 24th ,, | |
| 31 | Shamsennessa Bibi and others | Shaik Sammon | Do | 2396 | I | 90 | 35-39 | 27th ,, | |
| 32 | Hira Lal Mandal | Upendra Nath Sadhukhan | Agreement | 781 | IV | 6 | 194 195 | 12th May | |
| 33 | | Nagendra Nath Shaw | Declaration of Trade mark | 814 | IV | 12 | 96 99 | 15th ,, | |
| 34 | Narang Ray and another | Bepin Chandra Sadhukhan | Sale | 2623 | I | 91 | 119-121 | 17th ,, | |
| 35 | Sushil Kumar Basu and another | Asim Chandra Ghose | Do. | 826 | IV | 7 | 199-202 | 17th ,, | |
| 36 | | Jnan Chandra Dutta Roy | Declaration of Trade mark | 887 | IV | 7 | 217-218 | 26th ,, | |
| 37 | | Baidya Nath Byack | Ditto | 1075 | IV | 17 | 4 5 | 28th June | |
| 38 | Ramendra Nath Mitra | Natabar Dey and others | Mortgage | 3215 | I | 115 | 26 29 | 29th ,, | |
| 39 | Annada Bala Dasi | Satya Churn Karmakar | T. Lease | 3448 | I | 86 | 214 216 | 10th July | |
| 40 | Sitaram Saha and another | Shaik Sitab Ali | Mortgage | 3417 | I | 101 | 379-380 | 12th ,, | |
| 41 | Debendra Krishna Ghose | Abinash Chandra Ghosal | Release | 3482 | I | 81 | 391-392 | 12th ,, | |
| 42 | Shaik Mansoor Ali | Tabbar Khan | Sale | 3516 | I | 135 | 11-14 | 14th ,, | |
| 43 | Fateshi Bibi | Shaik Abdul Rahman | Do | 3683 | I | 126 | 27-28 | 21st ,, | |

| Serial No. | Names of parties. Claimant. | Executant. | Nature of document. | Number of document in register. | Book. | Volume | Pages | Date of— Completion of registration | Refusal. |
|---|---|---|---|---|---|---|---|---|---|
| 44 | Anukul Chandra Mookerjee .. | Sachindra Nath Mookerjee . | Gift . | 3701 | I | 106 | 226-231 | 1920 23rd July | |
| 45 | Suren Chand Dutt .. .. | Surendra Nath Haider and another | Reconveyance | 3761 | I | 134 | 54-60 | 27th ,, | |
| 46 | Chunt Lal Bakhit . | Gokul Chandra Chandra | Release | 3800 | I | 109 | 233 235 | 27th ,, | |
| 47 | Netwar Lall Acharat Lall Nanawati and others | Elias Emmanud Moses Jacob . | T. Lease | 3857 | I | 122 | 124-128 | 30th ,, | |
| 48 | . . | Mohamed Ahasan . | Declaration of Trade mark. | 1292 | IV | 16 | 108-109 | 31st ,, | |
| 49 | Sew Prasad Bonia . ... | Baludin Kalwar | Release | 1299 | IV | 16 | 110-111 | 2nd Aug | |
| 50 | Yosuf Haju Ahamad . | Franklin Marston Leslie and others. | T. Lease | 3931 | I | 127 | 145-151 | 4th ,, | |
| 51 | Jatindra Nath Biswas . | Jusuru Baid and another . | Reconveyance . | 3917 | I | 115 | 235-243 | 5th ,, | |
| 52 | Prasad Chandra Baj . | Manindra Nath Dhara | Sale . | 1382 | IV | 18 | 123-125 | 14th ,, | |
| 53 | Hakimam Hamadey Abdul Khaleq. | Abdul Rashid | Do | 4136 | I | 106 | 250-252 | 17th ,, | |
| 54 | Jyotish Chandra Ray | Sm. Indra Mati Debi | Do. | 4163 | I | 105 | 298 300 | 18th ,, | |
| 55 | Bata Krishna Doy and another | Sm Kshiroderani Dassi and another. | T Lease | 4152 | I | 135 | 144-146 | 19th ,, | |
| 56 | Hari Das Nundy and another | Hajee Kassim Hajee Ebrahim Salehjee and another | Ditto | 4310 | I | 112 | 292 296 | 19th ,, | |
| 57 | Shaikh Asabar Ali | Shaikh Afeuddin Mullick | Release | 1409 | IV | 16 | 150 151 | 19th ,, | |
| 58 | Bibhuti Bhusan Chatterjee and another. | Manesh Chandra Das Gupta | Partnership | 1536 | IV | 24 | 15 25 | 8th Sept | |
| 59 | Surendra Nath Chakrabarti and another | Shaikh Manjoor Ali Sircar and another. | Sale .. | 1513 | IV | 18 | 192 195 | 13th ,, | |
| 60 | Asmat Ali Mullick and another | Laukhi & Co. | T. Lease | 4614 | I | 151 | 61 63 | 14th ,, | |
| 61 | Bhabani Churn Bandopadhya | Sm Naresh Nandini Dasi | Release | 4690 | I | 137 | 183-184 | 15th ,, | |
| 62 | Memana Bibi Bewa | Ujiran Bibi Bewa . | Sale | 4711 | I | 125 | 218 220 | 18th ,, | |
| 63 | Dwijendra Nath Dhar | Jogo Prakash Brambachari | Settlement | 4835 | I | 138 | 248 251 | 28th ,, | |
| 64 | Haji Meah Mahomed and others | Fazeldin and others . | Deed of Ratification | 4993 | I | 170 | 1 7 | 5th Oct | |
| 65 | Debendra Nath Sadhookhan | Bhupendra Krishna Ghose | T Lease | 5079 | I | 157 | 161 165 | 8th ,, | |
| 66 | Abhoy Churn Gangopadhya | Abinash Chandra Sircar | Sale | 1713 | IV | 17 | 237 239 | 12th ,, | |
| 67 | Purnananda Singha | Lachmi Narain Shroff | T. Lease | 5262 | I | 178 | 29-36 | 16th ,, | |
| 68 | Muhammad Ali and another | Shaik Ejad Bux and another | Partnership | 1732 | IV | 20 | 221 225 | 16th ,, | |
| 69 | | Gopal Chandra Dutta | Declaration of trade mark | 1734 | IV | 17 | 251-252 | 16th ,, | |
| 70 | Shaikh Mahammad Safi and another | Musamat Khatija Bibi | Sale | 5572 | I | 145 | 265-270 | 8th Nov | |
| 71 | | Ram Ratan Mimani | Declaration of Trade mark | 1857 | IV | 19 | 268-296 | 25th ,, | |
| 72 | Fakir Mahammad and another | Basiran Bibi | Sale | 6143 | I | 191 | 18 21 | 21st Dec | |
| 73 | . | Mahamad Ahamad Dadobhoy | Declaration of Trade mark | 2578 | IV | 28 | 41 42 | 21st ,, | |
| 74 | Shaikh Saidoo Miah and another | Naran Chandra Ruidas | Partnership | 2065 | IV | 24 | 298 299 | 28th ,, | |
| 75 | A H. Gareh and another | Jai F Karani and another | T Lease | 2 R. | II | | | | 1920. 31st March |
| 76 | Shaikh Basir Ali | Narayan Kissen Sen, 180, and another | Reconveyance | 7 S R | II | | | | 10th April |
| 77 | Sarat Chandra Mookerjee | Anango Mohun Pal . | Ditto | 8 S. R. | II | | | | 11th ,, |
| 78 | Ajoy Nath Mitter . | Biresur Mookerjee | Mortgage | 9 S R. | II | | | -- | 12th ,, |
| 79 | Manalendra Kissen Mitter | K A. R. Sadka . | T Lease | 3 R | II | — | | | 4th May |
| 80 | Hari Das Daw . .. | Kiran Kumar Dutt and another | Surrender of Lease. | 12 S R | II | | | | 28th April |
| 81 | Panna Lal Shaw and another | Shaikh Mohammed Ibrahim and another. | T. Lease | 11 S R | II | | | | 6th May |
| 82 | Messrs. J. G. Bagram & Co and another. | T. M. Aniscough and another | Ditto . | 10 R. | II | | | .. | 4th Sept |
| 83 | Bau Behari Shaha ... .. | Dasarathi Sinha . | Agreement | 27 S. R | II | | | | 18th ,, |
| 84 | Ochhav Lal Magan Lal Parikh | Dasarath Lal Gordhondas Bhat . | Mortgage . | 32 S. R | II | | | | 5th Nov |
| 85 | Bijay Lal Seal and another ... | Central Hydraulic Press Co, Ld . | T. Lease | 34 S R. | II | . | | | 12th ,, |
| 86 | Bhut Nath Pal and others ... | Hari Das Daw ... ... .. | Ditto .. | 13 R | II | | | . | 3rd Dec |
| 87 | Land Acquisition Collector of Chittagong. | Gooran Ali *alias* Ichut Ali Mistri .. | Indemnity Bond | 1000 | IV | 5 | 287 288 | 14th June | |

CALCUTTA REGISTRATION OFFICE,
*The 19th June 1923.*

P. C. CHATTERJI,
*District Registrar of Assurances, Calcutta.*

## The Commissioners for the Port of Calcutta.

**Notice of sale under sections 118 and 119 of the Calcutta Port Act, III of 1890 (B.C.).**

NOTICE is hereby given that the liability of the Commissioners for the undermentioned goods consigned to order ex the undermentioned vessels has, in terms of section 113 of the abovementioned Act, ceased on the expiration of three clear days from the date of landing. These goods accordingly remain on the Port Commissioners' premises at the sole risk and expense of the owners, and if not cleared on or before the 4th September 1923, on payment of all charges due, will be sold by public auction

| Date of landing | Marks and numbers | Quantity. | Description. |
|---|---|---|---|
| | **SHED No. 8.** | | |
| | **SS. "Mangalore."** | | |
| 9th June 1923 ... | A W J 191 in a diamond, H C on top, B C below | 2 | Cases stationery |
| 9th " " ... | B D S in a diamond, 9 10 | 2 | Cases |
| 9th " " ... | J 44 in a diamond, A W on top, J Co below, 11 | 1 | Case |
| 7th " " ... | N L O 209 Lucknow, 126 | 1 | Case |
| 9th " " ... | R S T & Co Ld in a diamond, 14-23 | 10 | Cases |
| | **SS. "Malda."** | | |
| 16th " " ... | Cut 1269 in a diamond, B B & Co below, 4 13, 1075 | 11 | Cases. |
| 18th " " .. | C H Cawnpore .. ... | 12 | Cases jams & sauce |
| 18th " " ... | 413 in a diamond, D D on top, S S below, 4-5 | 2 | Cases |
| 16th " " ... | 4829 in a diamond, G C D below 3 ... | 1 | Case |
| 19th " " ... | 4828 in a diamond, G C D below, 1 2 ... | 2 | Cases. |
| 16th " " ... | 105 in a diamond, G C on top, M Co below, 406-412. | 7 | Packages |
| 16th " " .. | H D D, 2 3 .. ... ... | 2 | Cases |
| 16th " " ... | I M Co R I C Lucknow, 7-18 . | 12 | Cases |
| 19th " " .. | J S C in a diamond, S W on top, E Co below | 1 | Case water elevator buckets |
| 16th " " ... | J F M ... .. | 4 | Cases bitters |
| 16th " " ... | N C S & Co ... . . | 4 | Cases gin. |
| 16th " " ... | P C B & S in a diamond, 35 36 ... | 2 | Cases |
| 16th " " ... | P S O in a diamond, 3 ... ... | 1 | Case |
| 18th " " ... | P S & Co in a diamond, 209-11 ... | 3 | Packages |

| Date of landing | Marks and numbers | Quantity | Description |
|---|---|---|---|
| | **SHED No. 8**—*concld* | | |
| | **SS. "Malda"**—*concld* | | |
| 20th June 1923 | S A G & A in a diamond, 1 2 .. | 2 | Cases |
| 16th " " ... | V E F ... . .. | 8 | Cases beer |
| 18th " " ... | W P W, 430-48 .. .. | 19 | Cases |
| 18th " " ... | W S R in a diamond, 1 6 . | 6 | Do |
| 21st " " .. | Medical Department, C 722 | 1 | Case |
| | **SHED No. 9.** | | |
| | **SS. "Erinpura."** | | |
| 18th June 1923 | V E F .. . | 2 | Cases beer |
| | **Unidentified goods of K. P. Docks.** | | |
| | Nil . | 2 | Bundles flat iron |
| | Nil . .. | 1 | Box tin plate |
| | Nil . .. | 7 | Pieces iron plates |
| | Nil .. | 18 | Pieces planks |
| | **Unidentified goods received from Police.** | | |
| | Nil . . | 18 | Iron sockets |
| | Nil . | 3 | Tins milk |
| | Nil . | 3 | Tins dry colour |
| | Nil . | 1 | Iron pipe |
| | Nil . .. . | 1 | Toy car |
| | Nil | 5 | Mouth harmoneas. |
| | Nil . | .. | About 15 seers of pitch |
| | Nil . . | 1 | Keg red lead |
| | Nil . . | 29 | Pieces brass scrap |
| | Nil . .. | 2 | Bundles cotton thread |
| | Nil . .. ... | 6 | Pieces undershirts |
| | Nil .. . ... | .. | A small quantity of nails weighing about 3½ seers |
| | Nil .. . . | 1 | Box "Scissors" cigarettes of 50 packets |
| | Nil ... . .. | 2 | Pieces iron bolts |
| | Nil ... ... ... | 1 | Empty case |
| | Nil .. ... ... | 19 | Empty bottles |
| | Nil ... ... ... | 1 | Drum paint. |

| Date of landing. | Marks and numbers | Quantity. | Description. |
|---|---|---|---|
| | **SHED No. 6.** | | |
| | **SS. "Rangoon Maru."** | | |
| 25th June 1923... | A 2 in a diamond, B A on top, & Co below, 1 | 1 | Case |
| 25th " " ... | ═A I═, 1 ... ... | 1 | Do. |
| 23rd " " ... | C C C in a diamond, S C on top, 1-5 . | 5 | Cases |
| 23rd " " ... | D C in a diamond, 1-2 ... .. | 2 | Do |
| 23rd " " ... | 17 in a diamond, G S on top, 1-25 | 25 | Do |
| 23rd " " .. | ═18═, 1-25 .. | 25 | Do |
| 23rd " " ... | G D in a diamond, 4 ... | 1 | Case |
| 23rd " " ... | 498 H K R in a triangle, R N on top, D below, 500-505 | 6 | Cases |
| 25th " " .. | J L S in a diamond, 1794-1797 ... | 4 | Bundles matting |
| 23rd " " ... | K C B in a diamond, O S on top, 10 18 | 9 | Cases |
| 22nd " " ... | 85 2185 in a diamond, M E on top, & Co below, 9080 | 1 | Case |
| 23rd " " ... | A diamond, N S on top, M C below, 517-20 | 4 | Cases |
| 23rd " " ... | P E I W in a diamond, 1-5 ... | 5 | Crates |
| 23rd " " ... | R 296 in a diamond, C C on top, C J below, 8340-44 | 5 | Cases. |
| 23rd " " ... | S in a diamond .. .. | 1 | Case merchandise |
| 23rd " " . | Thakur in a diamond, K C on top, 31-37 | 7 | Cases |
| | **SHED No. 2.** | | |
| | **SS. "Matheran."** | | |
| 18th June 1923... | A C I C / B in an inverted triangle, Calcutta, 28-54. | 27 | Cases |
| 20th " " ... | 490 in a diamond, A W on top, J Co below, 80. | 1 | Case |
| 19th " " ... | A C L / N C & C, 19 ... ... ... | 1 | Do |
| 19th " " ... | B B / G in a diamond, T L below, 992-93 ... | 2 | Cases. |

| Date of landing. | Marks and numbers. | Quantity. | Description |
|---|---|---|---|
| | **SHED No. 2**—*concld* | | |
| | **SS. "Matheran"**—*concld.* | | |
| 20th June 1923 | Bonner in a double triangle, A Co on top, 1211. | 1 | Case |
| 18th " " ... | B P S & S 213 ... ... Lucknow, N-N | 16 | Cases merchandise |
| 20th " " ... | C & C Ltd A U M Ltd, 9969 ... ... | 1 | Case |
| 20th " " ... | Maylas in a triangle, Calcutta below 116-120. | 5 | Cases. |
| 18th " " ... | M C L & Co in a diamond, 22-25 ... | 4 | Do. |
| 21st " " ... | N K & Bros in a diamond, Lenares, 1 ... | 1 | Case |
| 21st " " ... | S B M B U F Co in a block, 1 ... ... | 1 | Case |
| 21st " " .. | 275 =Do =, 2 ... ... ... | 1 | Do |
| 21st " " ... | 303 =Do =, 3 ... ... .. | 1 | Do |
| 18th " " ... | 137 =Do =, 15 ... ... ... | 1 | Do |
| 18th " " ... | T A I E, 417 420 ... ... | 4 | Cases |
| 18th " " ... | Z H A 38 in a diamond, E E on top, R U below, Delhi 1-5. | 5 | Do |
| | **SHED No. 5.** | | |
| | **SS. "Clan Macfarlane."** | | |
| 3rd July 1923 ... | 278 in a diamond, A W on top, J G below, 59-62. | 4 | Casks |
| 2nd " " ... | John G Thathayya Amalapuram Godavery ... ... | 1 | Case cycle |
| 3rd " " ... | S B P / A W in a diamond, E J on top, T G below, 47. | 1 | Case linen. |
| 5th " " ... | St har Madras ... ... ... | 1 | Piece weight |
| 2nd " " ... | W S R in a triangle, 1 ... ... | 1 | Case |
| 3rd " " ... | Y R in a diamond, 7 below, 01 ... | 1 | Do |

H. H. HUDSON, Traffic Manager (offg.).

Port Commissioners' Office, Calcutta, the 18th July 1923. (1329—1)

## IMPERIAL BANK OF INDIA.

***Statement of the affairs of the Imperial Bank of India on the 6th July 1923.***

**LIABILITIES**

| | Rs. | A | P. |
|---|---|---|---|
| Subscribed Capital ... ... ... .. | 11,25,00,000 | 0 | 0 |
| Capital paid up ... ... . .. | 5,62,50,000 | 0 | 0 |
| Reserve .. ... .. ... | 4,22,50,000 | 0 | 0 |
| Public Deposits .. ... ... .. | 28,86,13,000 | 0 | 0 |
| Other Deposits ... ... .. . .. | 64,57,90,000 | 0 | 0 |
| Loans against securities per contra . | .. . | | |
| Contingent liabilities .. ... | . . | | |
| Sundries . ... . ... ... | 1,65,06,000 | 0 | 0 |
| | 1,04,94,09,000 | 0 | 0 |

**ASSETS**

| | Rs | A. | P. |
|---|---|---|---|
| Government Securities ... .. | 14,85,20,000 | 0 | 0 |
| Other authorised securities under the Act ... | 1,22,67,000 | 0 | 0 |
| Loans .. ... .. .. . .. | 16,10,59,000 | 0 | 0 |
| Cash credits . ... ... .. .. | 31,91,00,000 | 0 | 0 |
| Inland bills discounted and purchased .. | 5,00,15,000 | 0 | 0 |
| Foreign bills discounted and purchased . | 38,60,000 | 0 | 0 |
| Bullion ... ... ... .. .. | ... . | | |
| Dead Stock .. ... ... . .. | 2,44,36,000 | 0 | 0 |
| Liability of constituents for contingent liabilities per contra .. ... ... | ..... | | |
| Sundries ... ... ... .. ... | 41,54,000 | 0 | 0 |
| Balances with other Banks .. ... | 88,70,000 | 0 | 0 |
| | 75,18,81,000 | 0 | 0 |
| Cash .. .. ... ... ... ... | 29,75,28,000 | 0 | 0 |
| | 1,04,94,09,000 | 0 | 0 |

The above balance sheet includes—

Deposits in London ... ... . ... £ 749,800

Advances in London ... .. ... ... £ 244,200

Cash and balances at other Banks in London £ 584,400

Percentage 31 28

Bank Rate 4 per cent.

R AITKEN,

W B HUNTER,

Managing Governors.

(1324—1)

## Sheriff's Sale Proclamation.

TO be peremptorily sold pursuant to an order made by the High Court of Judicature at Fort William in Bengal in its Ordinary Original Civil Jurisdiction and dated the 27th day of March 1923 in suit No 2726 of 1921 (Jogendra Chandra Khan *versus* Sm Padmarani Dassi and another) by the Sheriff of Calcutta in his sale-room on the ground floor of the Court house by public auction on Friday the 17th day of August 1923 at the hour of 12 o'clock noon the right title and interest of Lucky Narain Patro deceased in the under mentioned property

All that two-storied brick-built messuage or dwelling house together with the land or ground whereon or on part whereof the same is erected and built containing by estimation one and half cottahs more or less situate lying at and being premises No 14 Chasadhopapara Street in Sutanutty in the town of Calcutta and butted and bounded on the north by premises No 15 Chasadhopapara Street on the east by a common passage on the south partly by a bustee land and partly by Chasadhopapara Street and on the west by premises No 13 Chasadhopapara Street.

It appears from searches made in the Calcutta Registry office from 1865 to date that there are no encumbrances affecting the above property which is to be sold for realisation of Rs 1,845 with interest thereon at the rate of 6 per cent per annum from the date of the decree made herein and dated the 7th February 1922 until realization and for recovery of Rs 339-3-9 being the taxed costs under the said decree with interest at the like rate from the 21st June 1922 (date of taxation) until payment and the costs of execution

The condition of sale may be seen at the office of the said Sheriff on any day before the sale and will be produced at the sale.

M. M. ALI NAKEY, Sheriff.

S. N. Ghose, Plaintiff's Attorney.

8, Old Post Office Street, Calcutta, the 13th day of July 1923. (1327—1)

## In the Court of the District Judge of Bakarganj.

INSOLVENCY CASE No. 3 OF 1923

PRESENT:

G C SANKEY, ESQ., I C S, District Judge.

NOTICE is hereby given that one Raj Kumar Kangsabanik and Pran Krishna Kangsabanik, sons of late Pitambar Kangsabanik, of Aulapur, police-station Bakarganj, at present of Barisal, have applied to this Court to be declared as insolvents and that 2nd August 1923 has been fixed for hearing the petition and for examination of the petitioners

G. C. SANKEY, District Judge.

Barisal, the 5th July 1923. (1295—1)

NOTICE TO CREDITORS OF THE DATE OF HEARING OF AN INSOLVENCY PETITION.

[*Section 19 of the Provincial Insolvency Act, V of 1920*]

## In the Court of the District Judge at Chittagong.

INSOLVENCY APPLICATION No. 15 OF 1923.

WHEREAS Srish Chandra De, son of late Jagabandhu De, of Halishahar, police station Double Moorings, district Chittagong, has applied to this Court by a petition, dated the 21st May 1923, to be declared an insolvent under the Provincial Insolvency Act, V of 1920, this is to give notice to his creditors that the Court has fixed the 23rd day of July 1923 for the hearing of the aforesaid petition and the examination of the debtor.

J W NELSON, District Judge.

Chittagong, the 4th July 1923 (1317—1)

ORDER OF ADJUDICATION.

[*Section 18 of the Provincial Insolvency Act, III of 1907*]

**In the Court of the District Judge at Dacca.**

INSOLVENCY APPLICATION No. 12 OF 1912.

PURSUANT to a petition, dated 28th November 1922, filed by Nitya Bihari Shaha, son of late Sublal Shaha, of Biraha, police-station Sabhar, and on the application of the debtor himself and on reading his petition and hearing his pleader it is ordered that the debtor be and the said debtor is hereby adjudged insolvent and he is directed to apply for his discharge within one year from this date.

Dated this 2nd day of July 1923

J F GRAHAM, District Judge

(1294—1)

---

**In the Court of the District Judge of Dinajpur.**

INSOLVENCY CASE No. 64 OF 1923.

HAJI BAHARUDDIN SARKER, son of Basar Mahamed, deceased, resident of Lalbagh, police station Kotwali, district Dinajpur, has applied to this Court to be declared insolvent The 1st day of August 1923 has been fixed for the examination of the petitioner at Dinajpur.

B L SARKAR, *for* District Judge

Dinajpur, the 6th July 1923 (1297—1)

---

**In the Court of the Additional District Judge of Hooghly at Howrah.**

INSOLVENCY PETITION No 74 OF 1922

NOTICE is hereby given that Forsed Ali Mir, son of late Jonap Ali Mir, of Mainan, thana Amta, district Hooghly, was on the 2nd May 1923 adjudged an insolvent The 20th July 1923 has been fixed for framing a schedule and creditors are required to prove their claims on that day.

A A PATTERSON,

Additional District Judge

Howrah, the 9th June 1923 (1131—1—1357)

---

**In the Court of the District Judge of Jalpaiguri.**

INSOLVENCY CASE No 66 OF 1923

RAGHU NANDAN RAM and NARAYAN RAM, of Bhagatpur, police-station Nagarkata, district Jalpaiguri, have applied to this Court to be declared insolvents The 28th day of August 1923 has been fixed for the examination of the petitioners at Jalpaiguri.

B L SARKAR, *for* District Judge

Dinajpur, the 6th July 1923 (1296—1)

---

**In the Court of the District Judge of Nadia.**

INSOLVENCY CASE No. 24 OF 1923

SUMMARY ADMINISTRATION.

Petitioner Radha Govinda Fouzdar, son of late Nanda Lal Fouzdar, of Santipur, police-station Santipur, district Nadia.

NOTICE is hereby given, under section 74 of the Provincial Insolvency Act, V of 1920, to his creditors that the above-named petitioner has filed an insolvency petition and that 11th August 1923 has been fixed for the hearing thereof. Proof of any claim the creditors desire to make must be lodged in court on or before that date.

B. G. CHATTERJI, District Judge

Krishnagar, the 10th July 1923. (1318—1)

**In the Court of the District Judge of Pabna and Bogra.**

INSOLVENCY CASE No. 23 OF 1923

WHEREAS Prasanna Nath Mondal, son of late Bhagaban Chandra Mondal, of Sarancha, police-station Dupchachia, district Bogra has applied to this Court by a petition, dated the 12th June 1923, to be declared an insolvent, this is to give notice to all his creditors that the Court has fixed the 30th July 1923 for hearing of the aforesaid petition and the examination of the debtor

G C. SEN, District Judge

Pabna, the 4th July 1923 (1288—1—1372)

---

NOTICE

**In the 4th Court of the Sub-Judge of 24-Parganas.**

INSOLVENCY CASE No 66 OF 1923.

Maharaj Kaji, of Pana, thana Diamond Harbour, 24-Parganas, applicant,

To Gunadhar Kaji, of Pana, thana Diamond Harbour, 24 Parganas, and others, creditors

ON the 5th day of April 1923 it was ordered that the matter of the petition of the applicant be heard on the 23rd day of July 1923 and that the said applicant do attend to be examined by this Court on that date

A T PAL, Sub-Judge.

Alipore, the 21st May 1923 (999—1—1358)

---

NOTICE

**In the 4th Court of the Sub-Judge of 24-Parganas.**

INSOLVENCY CASE No 70 OF 1923

Sailendranath Sarkar, of Bhangore, thana Bhangore, 24-Parganas, applicant

To Sashisekhar Bose, Chairman, District Board, 24-Parganas, Alipore, creditor

ON the 6th day of April 1923 it was ordered that the matter of the petition of the applicant be heard on the 23rd day of July 1923 and that the said applicant do attend to be examined by this Court on that date

A. T. PAL, Sub-Judge

Alipore, the 21st May 1923 (1000—1—1359)

---

NOTICE.

**In the 4th Court of the Sub-Judge of 24-Parganas.**

INSOLVENCY CASE No. 73 OF 1923

Shaikh Abdul Wahid, of 20, Dilkhasa Road, thana Benepukur, 24-Parganas, applicant.

To Abdul Khan Kabuli, of 15, Koraya Road, thana Entally, 24-Parganas, and others, creditors

ON the 16th day of April 1923 it was ordered that the matter of the petition of the applicant be heard on the 23rd day of July 1923 and that the said applicant do attend to be examined by this Court on that date.

A. T PAL, Sub-Judge.

Alipore, the 21st May 1923. (1001—1—1360)

NOTICE.

**In the 4th Court of the Sub-Judge of 24-Parganas.**

INSOLVENCY CASE No. 75 OF 1923.

Rajendra Nath Purkait, of Sidheswarpur, thana Kulpi, 24-Parganas, applicant.

To Harendra Nath Ballav, of New Canal Road, Daspara, Ultadangi Rice Mill, 24-Parganas, and others, creditors.

ON the 14th day of April 1923 it was ordered that the matter of the petition of the applicant be heard on the 23rd day of July 1923 and that the said applicant do attend to be examined by this Court on that date

A T PAL, Sub-Judge.

Alipore, the 21st May 1923 (1002—1—1361)

NOTICE.

**In the 4th Court of the Sub-Judge of 24-Parganas.**

INSOLVENCY CASE No 77 OF 1923.

Kallu Mothor, of Bhawanipur, thana Bhawanipur, 24-Parganas, applicant,

To Rukkini Aya, of 39, Pallygunj First Lane, 24-Parganas, and others, creditors

ON the 7th day of April 1923 it was ordered that the matter of the petition of the applicant be heard on the 30th day of July 1923 and that the said applicant do attend to be examined by this Court on that date

A. T. PAL, Sub-Judge

Alipore, the 21st May 1923 (1003—1—1362)

NOTICE

**In the 4th Court of the Sub-Judge of 24-Parganas.**

INSOLVENCY CASE No 79 OF 1923

Bhuban Mohan Ghosh, of 25 2, Rupnarain Nandan Lane, Bhawanipur, 24-Parganas, applicant,

To Bahir Das Pal, of 2, Madhab Chattarji Lane, Bhawanipur, 24-Parganas, and others, creditors.

ON the 5th day of April 1923 it was ordered that the matter of the petition of the applicant be heard on the 30th day of July 1923 and that the said applicant do attend to be examined by this Court on that date.

A. T. PAL, Sub-Judge.

Alipore, the 21st May 1923 (1004—1—1363)

NOTICE.

**In the 4th Court of the Sub-Judge of 24-Parganas.**

INSOLVENCY CASE No. 81 OF 1923

Dwarika Nath Bor, of Molaya, thana Magrahat, 24-Parganas, applicant.

To Nibaran Chandra Mitra, of Ektara, thana Diamond Harbour, 24-Parganas, and others, creditors.

ON the 11th day of April 1923 it was ordered that the matter of the petition of the applicant be heard on the 30th day of July 1923 and that the said applicant do attend to be examined by this Court on that date.

A. T. PAL, Sub-Judge

Alipore, the 21st May 1923. (1005—1—1364)

NOTICE.

**In the 4th Court of the Sub-Judge of 24-Parganas.**

INSOLVENCY CASE No. 83 OF 1923.

Jyotindra Nath Ghosh, of Basirhat, thana Basirhat, 24-Parganas, applicant.

To Mahamaya Dassi, of 347, Upper Chitpur Road, Calcutta, and others, creditors.

ON the 11th day of April 1923 it was ordered that the matter of the petition of the applicant be heard on the 30th day of July 1923 and that the said applicant do attend to be examined by this Court on that date.

A. T. PAL, Sub-Judge.

Alipore, the 21st May 1923. (1006—1—1365)

NOTICE.

**In the 4th Court of the Sub-Judge of 24-Parganas.**

INSOLVENCY CASE No. 61 OF 1923

Ramlakhan Mistri, of Sabgachi, thana Tollygunge, 24-Parganas, applicant

To Radha Uraiu, of Sabgachi, post-office Dhakuria, 24-Parganas, and others, creditors.

ON the 28th day of May 1923 it was ordered that the matter of the petition of the applicant be heard on the 13th day of August 1923 and that the said applicant do attend to be examined by this Court on that date.

A. T. PAL, Sub-Judge.

Alipore, the 19th June 1923. (1168—1—1373)

NOTICE.

**In the 4th Court of the Sub-Judge of 24-Parganas.**

INSOLVENCY CASE No. 98 OF 1923.

Nanilal Bit, of village Khardaha, 24-Parganas, applicant.

To Nut Behari Gui, of Alambazar, Neogipara, post-office Alambazar, 24-Parganas, and others, creditors.

ON the 25th day of April 1923 it was ordered that the matter of the petition of the applicant be heard on the 13th day of August 1923 and that the said applicant do attend to be examined by this Court on that date.

A. T. PAL, Sub-Judge.

Alipore, the 19th June 1923 (1169—1—1368)

NOTICE.

**In the 4th Court of the Sub-Judge of 24-Parganas.**

INSOLVENCY CASE No. 101 OF 1923.

Sachindra Kumar Mitra, 29 A B, Mahesh Barik Lane, Narkeldanga, applicant,

To Ali Mahammad Khan, 6, Aga Mehdi Street, Calcutta, and others, creditors.

ON the 20th day of April 1923 it was ordered that the matter of the petition of the applicant be heard on the 13th day of August 1923 and that the said applicant do attend to be examined by this Court on that date.

A. T. PAL, Sub-Judge.

Alipore, the 19th June 1923. (1171—1—1369)

NOTICE.

**In the 4th Court of the Sub-Judge of 24-Parganas.**

INSOLVENCY CASE No. 95 OF 1923.

Khater Gazi, of Durgapur, thana Joynagore, 24-Parganas, applicant

To Mahendranath Ghose, of Durgapur, thana Joynagore 24-Parganas, and others, creditors

ON the 20th day of April 1923 it was ordered that the matter of the petition of the applicant be heard on the 13th day of August 1923 and that the said applicant do attend to be examined by this Court on that date.

A. T. PAL, Sub-Judge

Alipore, the 19th June 1923. (1172—1—1366)

---

NOTICE

**In the 4th Court of the Sub-Judge of 24-Parganas.**

INSOLVENCY CASE No 96 OF 1923

Zaheroddi Gazi, of Durgapur, thana Jaynagar, 24-Parganas, applicant.

To Mahendranath Ghose, of Durgapur, thana Jaynagore, 24-Parganas, and others, creditors

ON the 20th day of April 1923 it was ordered that the matter of the petition of the applicant be heard on the 13th day of August 1923 and that the said applicant do attend to be examined by this Court on that date

A. T PAL, Sub Judge.

Alipore, the 19th June 1923. 1173—1—1367)

---

PROVAT KUMAR SEN, B L, intends to be enrolled as a Vakil of the High Court, Calcutta

(1209—4—1278)

---

WANTED candidates for admission into the Amin class of the B. G Technical School, Rangpur Students passing the M E or M. V. examinations and the annual examinations for promotion to class VII (4th class) of H. E. schools, above 16 years old, are qualified for admission, but preference will be given to students of higher classes of H. E schools and specially passed and plucked Matriculates

There are two scholarships of Rs 10 each a month tenable for one year for the two best boys of this class Session commences from July There is a Hindu hostel attached to the school. Mahammadan boys may put up at the Hare Mostem Hostel, Rangpur.

Apply for rules with half anna postage stamps.

SIDDHESWAR SHAHA, Superintendent,

B G. Technical School Rangpur.

Rangpur, the 5th June 1923.

---

**Jamshedpur Technical Institute.**

APPLICATIONS are invited from students desirous of studying metallurgy at the Jamshedpur Technical Institute Five students will be selected from this province, who are natives of or are domiciled in Bengal Of these, two will be non-Hindus. The next session will commence on November 1st

A combined theoretical and practical three years' course is given at the institute and the works in the metallurgy of iron and steel. During the training each student will be allowed a monthly stipend of Rs 60 On the completion of the course, successful students may be required to enter into an agreement to serve the Tata Iron and Steel Company for five years, in which case they will be given a position in the works on a salary of not less than Rs 200 per month.

The minimum qualification required is the Intermediate Science or Engineering of a recognised University or the Cambridge Higher School Certificate Examination and the subjects passed must include Physics, Chemistry and Mathematics Students who have passed the Final Examination of the Mechanical, Electrical or the Mining Classes of the Bengal Engineering College are also eligible for admission Candidates must be under 22 years of age, and those selected will be required to produce a certificate of physical fitness

Applications will be received by the undersigned up to the 31st July 1923 Candidates should state their age, academic qualifications, the province they come from, weight, height, abdomen and chest measurements in their applications

Only copies of certificates should be enclosed

Original certificates will be called for later on from the applicants selected

D. B MEEK, Director of Industries, Bengal.

40-1A, Free School Street, Calcutta, the 12th July 1923

---

**Government of Bengal.**

**PUBLIC HEALTH DEPARTMENT.**

**Engineering Branch.**

NOTICE

THE offices of the Chief and Executive Engineers, Public Health Department, and the Sanitary Board will be removed to No 3, Charnock Place, on Friday, the 22nd June 1923.

G B WILLIAMS, Chief Engineer,

Public Health Department, Bengal

---

NOTICE

**Imperial Bank of India.**

THE Members of the Local Board have made the following changes in the Bank's establishment —

Mr. Sita Ram to be Assistant in-charge at Murree Branch, as from the 5th July 1923, *vice* Mr F. H. Weston, transferred

Mr A R Chisholm to be Officer-in-charge at Jullundur Branch, as from the 6th July 1923, *vice* Mr W B Macbain, transferred

By order,

S A. B SITWELL,

Secretary and Treasurer

Calcutta, the 10th July 1923. (1319 —1)

---

NOTICE

**Imperial Bank of India.**

THE Members of the Local Board have made the following change in the Bank's Establishment —

Mr H. Dancy to officiate as Superintendent, Government Account Department, as from the 12th July 1923, *vice* Mr. H. M. Wigley, granted leave.

By order,

S A B SITWELL,

Secretary and Treasurer.

Calcutta, the 12th July 1923 (1323—1)

## Public Works Department, Bengal.

NORTHERN CIRCLE—DARJEELING DIVISION.

SEALED tenders in Public Works Department Form No. K-2 are invited from reliable contractors for the construction of the works noted below.

Tenders will be received by the Executive Engineer, Darjeeling, up to 12 noon of 15th August 1923 and will be opened by him in his office at 11 A.M. on the following day in the presence of any tenderers who may wish to be present.

The envelope enclosing tender should be distinctly marked "Tender for Dow Hill Dormitory, Kurseong."

2 Forms of tender, plans of the building, the schedule of quantities and the items of works to be executed, specifications, particulars regarding materials which will be supplied by the Public Works Department and their rates, and all other necessary information may be had on personal application to the undersigned during working days between the hours of 11 and 1 o'clock.

| Serial No | Name of work | Total estimated amount excluding contingencies. |
|---|---|---|
| | | Rs. |
| I. | Constructing a new Dormitory building in the Dow Hill Girls' School, Kurseong ... | 1,20,898 |
| II. | Wood work for the above building which will be executed by Chinese labour, *e g*, doors and windows, planked flooring and walling, staircases, panelled partitions, wardrobe cupboards, boot lockers, etc ... | 33,000 |

3. The contractors may quote for the complete building as mentioned in (I) or for wood work only as mentioned in (II). Rates quoted should include all materials and tools and plant necessary

4. The undersigned does not bind himself to accept the lowest or any tender.

5 A sum of Rs. 200 should be deposited as earnest money with the tender, which will be returned in full to the unsuccessful tenderers.

C. W TANDY GREEN, A M I C E,
Executive Engineer, Darjeeling Division.

Darjeeling, the 12th July 1923.

## Notice.

THE Bengal and Madras Service Family Pension Fund which is provisionally managed and assisted by Government has for its object the provision of monthly pensions for the maintenance of the widows and children of subscribers and is open, with certain exceptions, to all active and pensioned members of the Uncovenanted Service of Government (except those serving under the Government of Bombay), and to Local Fund servants earning pensions from Government. Some of the special features of the fund are—(1) that widowed daughters incapable of remarriage or children labouring under such mental or bodily infirmities as incapacitate them from earning their livelihood or preclude the possibility of marriage (in case of a daughter) are admitted to its benefits; and (2) that subscribers to the Widows' and Daughters' branches are entitled to a refund of 30 per cent. of the premia paid, should the nominees predecease them after five years of admission. The second quinquennial valuation of the Fund has been completed by the Actuary to the Government of India and his report discloses very favourable results. For forms of application and rules of the Fund apply to the Accountant-General, Central Revenues, Imperial Secretariat Buildings, Calcutta.

## Notice to creditors under section 10A of Act IX (B. C.) of 1879.

WHEREAS under sections 7 and 35 of the Court of Wards Act, IX (B C) of 1879, as amended up to date, the Court of Wards has assumed charge of the property of Babu Jagat Prasanna Mukherji and Sailaja Prasanna Mukherji, sons of late Rai Girija Prasanna Mukherji Bahadur of Gobordanga.

Notice is hereby given under section 10A of the said Act that all creditors having claims against the said Jagat Prasanna Mukherji and Sailaja Prasanna Mukherji or their immovable property are hereby required to submit the same in writing to the Collector of 24-Parganas at his office at Alipore within six months from the date of publication of this notice

Creditors are also hereby warned that claims not submitted as required by this notice are liable to be deemed to have ceased to carry interest.

R. F. LODGE, Collector

Alipore, the 7th July 1923 (1320—1)

## The Commissioners for the Port of Calcutta.

NOTICE is hereby given that as cargo boat No A31, License No 27, which sank at No 25 Berth, Kidderpore Docks, on the 8th April 1922, and was raised and removed by the Commissioners as Conservators of the Port of Calcutta under section 14 (*1*) of the Indian Ports Act, XV of 1908, remains unclaimed and the owner has failed to pay the expenses incurred by the Conservators in raising and removing the boat, together with a further sum of 20 per cent. of the amount of such expenses, the boat will be sold by public auction by the Commissioners' Store-keeper, on Friday, the 27th July 1923, at noon, for the recovery of the said expenses

The boat is lying on the foreshore at Sibpur and the purchase money is to be deposited at once The purchaser will be allowed 21 days' time to remove the boat

N GANGULI, *for* Secretary (offg).

Calcutta, the 7th July 1923. (1321—1)

## Custom House Notice.

NOTICE is hereby given that if the duty, interest warehouse rent and all charges be not paid within ten days from the date of this notice on one package of Brandy marked K B S & S *ex* SS "Warfield" bonded by K B. Singha and Sons in 7, Radha Bazar Lane, the goods will be sold by public auction under the provisions of the section 119 of the Sea Customs Act

W. W NIND, Collector of Customs

The 2nd July 1923 (1270—2)

## Custom House Notice.

NOTICE is hereby given that if the duty interest, warehouse rent, and all charges be not paid within ten days from the date of this notice on 25 packages of whisky marked K. B. *ex.* SS "Maihar" from bonded by The Mercantile, 1-25, Bank of India, Limited, in the Bengal Bonded Warehouse Association, the goods will be sold by public auction under the provisions of the section 119 of the Sea Customs Act.

W. W. NIND, Collector of Customs.

(1282—1)

## Custom House Notice.

NOTICE is hereby given that, if the duty interest, warehouse rent and all charges be not paid within ten days from the date of this notice on 15 packages of whisky marked Framjee *ex.* SS. "Clan Robertson", from Glasgow, bonded by Framjee & Sons. in the Private Warehouse No. 11, Bentinck Street, the goods will be sold by public auction under the provisions of the section 119 of the Sea Customs Act.

W. W. NIND, Collector of Customs.

Calcutta, the 6th July 1923. (1293—2)

### Lost.

THE Government Promissory Notes Nos. E003992 and D013184 of the 5 per cent. loan of 1945-55 for Rs. 200 and Rs. 100, respectively, originally standing in the name of the Accountant-General, Bengal, and last endorsed to Kaniram Mahadeb, the proprietor, by whom they were never endorsed to any other person, having been lost, notice is hereby given that payment of the above notes and the interest thereupon have been stopped at the Public Debt Office, Imperial Bank of India, Calcutta, and that application is about to be made for the issue of duplicates in favor of the proprietor. The public are cautioned against purchasing or otherwise dealing with the abovementioned securities.

Name of the Advertiser—Kaniram Mahadeb.
Residence—Saidpur (Rangpur district).

(1137—3—1370)

### Lost.

THE Government Promissory notes Nos 090611 and 090612 of the 3½ per cent. loan of 1900-01 for Rs 1,000 each, originally standing in the name of Hara Sundari Debi, the proprietress, by whom they were never endorsed to any other person, having been lost, notice is hereby given that payment of the above notes and the interest thereupon have been stopped at the Public Debt Office, Imperial Bank of India, Calcutta, and that application is about to be made for the issue of duplicates in favour of the proprietress The public are cautioned against purchasing or otherwise dealing with the abovementioned securities

MAHESH CHANDRA LAHIRI,
SARAT CHANDRA LAHIRI,
(Successors in the Estate of late Hara Sundari Debi.)

Address—Village and post office Bhandarpur, police-station Badalgachi, district Rajshahi

(850—3—1303)

### Stolen.

THE Government Promissory Notes Nos 123482, 131911, 122395, 140123 and 147734 of the 3½ per cent loan of 1854-55 for Rs 1 000 each originally standing in the name of the Ram Lall Sadhukhan, the proprietor, by whom they were never endorsed to any other person having been stolen notice is hereby given that payment of the above notes and the interest thereupon have been stopped at the Public Debt Office, Imperial Bank of India, Calcutta, and that application is about to be made for the issue of duplicates in favour of Kanai Lall Pramanik, Amirta Lall Pramanik and Sambhu Nath Pramanik. The public are cautioned against purchasing or otherwise dealing with the above-mentioned securities.

Name of the Advertiser—Sambhu Nath Pramanik
Residence—No. 11, Grey Street, Calcutta

(1027—3—1304)

IN THE HIGH COURT OF JUDICATURE AT FORT WILLIAM IN BENGAL.

ORDINARY ORIGINAL CIVIL JURISDICTION.

### In the matter of the Indian Companies Act, VII of 1913, and

### In the matter of the Jasnadih Coal Company, Limited.

NOTICE is hereby given that a petition for the winding up of the abovenamed Company by the High Court of Judicature at Fort William in Bengal was on the 2nd day of July 1923 presented to the Hon'ble Mr. Justice Greaves, sitting in Chambers by Stewart Kirk, a creditor of the said Company. And that the said petition is directed to be heard before the Judge in Chambers, on Monday, the 30th day of July 1923, and any creditor or contributory of the said Company desirous to oppose the making of an order for the winding up of the said Company under the above Act should appear at the time of hearing by himself or his Counsel for that purpose; and a copy of the petition will be furnished to any creditor or contributory of the said Company, requiring the same, by the undersigned, on payment of the regulated charge for the same
Dated this 3rd day of July 1923.

KESTEVEN GOODING & Co.,
Attorneys for the Petitioner

26, Dalhousie Square, Calcutta. (1276—1—1353)

### In the matter of the Indian Companies Act, 1913, and

### In the matter of The Kleine Patent Construction Company (India), Limited (in liquidation).

NOTICE is hereby given that at an extraordinary general Meeting of the members of the abovenamed Company duly convened and held at No 2, Royal Exchange Place, in the town of Calcutta, on the 30th day of June 1923, the resolution below mentioned was passed as an extraordinary resolution —

"The Company cannot by reason of its liabilities continue to carry on its business and accordingly that the Company be wound up voluntarily and that Mr A A. Harvey of 2, Royal Exchange Place, Calcutta, be and he is hereby appointed liquidator for the purpose of such winding up without remuneration"

A A HARVEY, Liquidator

Calcutta, the 2nd July 1923 (1233—1—1354)

### In the matter of the Indian Companies Act, 1913, and

### In the matter of the Surma Valley Saw Mills, Limited (in liquidation).

NOTICE is hereby given that an extraordinary general meeting of the members of the abovenamed Company duly convened and held at Chartered Bank Buildings in the town of Calcutta, on the 3rd day of July 1923, the resolution below mentioned was passed as an extraordinary resolution:—

"That the Company cannot by reason of its liabilities continue to carry on its business, and accordingly that the Company be wound up voluntarily and that Messrs. Dugald McKechnie, Kenneth Blair Dunlop, Clarence George Ashworth and Charles Ernest Walker all members of the firm of Messrs. Lovelock & Lewes be and the same are hereby appointed as liquidators for the purposes of such winding up with joint and several powers and at such remuneration as may be agreed upon between them and the Managing Agents of the Company"

KENNETH B DUNLOP,
*for* Self and Co-liquidators.

25, Mangoe Lane, Calcutta, the 6th July 1923
(1292—1—1356)

### In the matter of the Indian Companies Act, 1913, and

### In the matter of The Kleine Patent Construction Company (India), Limited (in liquidation).

NOTICE is hereby given pursuant to section 209 of the Indian Companies Act, 1913, that a meeting of the creditors of the abovenamed Company will be held at No. 2, Royal Exchange Place, Calcutta, on Tuesday, the 24th day of July 1923, at 12 o'clock noon.

Calcutta, the 2nd day of July 1923

A. A. HARVEY, Liquidator.

(1234—1—1355)

**In the matter of the Indian Companies Act, 1913 (VII of 1913), and**

**In the matter of Bengal Agricultural and Banking Company, Limited.**

NOTICE is hereby given that the name of Bengal Agricultural and Banking Company, Limited, has this day been struck off the Register and that the Company is dissolved.

W. STATHER HALE,

Registrar of Companies under Act VII of 1913

Calcutta, the 11th July 1923

---

**In the matter of the Indian Companies Act, 1913 (VII of 1913), and**

**In the matter of Indian Glass Works, Limited.**

NOTICE is hereby given that the name of Indian Glass Works, Limited, has this day been struck off the Register and that the Company is dissolved.

W. STATHER HALE,

Registrar of Companies under Act VII of 1913

Calcutta, the 11th July 1923

---

**In the matter of the Indian Companies Act, 1913 (VII of 1913), and**

**In the matter of General Products, Limited.**

NOTICE is hereby given that the name of General Products, Limited, has this day been struck off the Register and that the Company is dissolved.

W. STATHER HALE,

Registrar of Companies under Act VII of 1913.

Calcutta, the 11th July 1923.

---

**In the matter of the Indian Companies Act, 1913 (VII of 1913), and**

**In the matter of Steamship Gallia, Limited.**

NOTICE is hereby given that the name of Steamship Gallia, Limited, has this day been struck off the Register and that the Company is dissolved.

W STATHER HALE,

Registrar of Companies under Act VII of 1913

Calcutta, the 11th July 1923.

---

**In the matter of the Indian Companies Act, 1913 (VII of 1913), and**

**In the matter of S. Bose and Company, Limited.**

NOTICE is hereby given that the name of S. Bose & Company, Limited, has this day been struck off the Register and that the Company is dissolved.

W. STATHER HALE,

Registrar of Companies under Act VII of 1913.

Calcutta, the 11th July 1923

---

**Descriptive Catalogue of Sanskrit Manuscripts.**

**PARTS I, II, and III of a Descriptive Catalogue** of the Sanskrit Manuscripts in the Library of the Calcutta Sanskrit College, prepared by Pandit Hrishikesh Sastri and Babu Siva Chandra Gui, M.A., B.L., of that College, are offered to the public for sale. The Catalogue having to be completed in 23 parts the price of each part is 12 annas a copy exclusive of postage. Copies can be obtained from the Principal of the Sanskrit College, Calcutta.

---

## Post Office.

### Despatch of Sea-borne Mails.

| MAILS FOR— | Day or date of closing of mails. | LATEST HOURS OF POSTING AT THE G. P. O. | | | |
|---|---|---|---|---|---|
| | | UNREGISTERED LETTERS AND PACKETS. | | REGISTERED LETTERS AND PACKETS. | |
| | | Without late fee. | With late fee.* | Without late fee. | With late fee.* |
| | | P.M. | P.M. | P.M. | P.M. |
| United Kingdom, Europe, Aden, Egypt, East and West Africa and America ... ... | Thursday ... | 5-45 | 6-45 | 4-45 | 5-15 |
| Ceylon ... ... ... ... | Daily ... | 4-15 | 4-45 | 3-15 | 3-45 |
| † Australia and New Zealand (*vid* Colombo) .. | July 25 ... | 4-15 | 4-45 | 3-15 | 3-45 |
| Straits Settlements, French Indo-China, Federated Malay States, Philippine Islands, Netherlands-India, Siam, China and Japan per SS. "Lai Sang" | " 16 ... | 7-30 | 8-0 | 5-0 | 6-0 |
| Burma ... ... ... ... | " 16 ... | 7-30 | 8-0 | 5-0 | 6-0 |
| Port Blair (*vid* Rangoon) ... ... ... | " 30 ... | 7-30 | 8-0 | 5-0 | 6-0 |

NOTE.—The latest date and hour for booking Money Orders and Parcels for despatch by the Homeward English mail is Wednesday, 8 P.M., and Thursday noon respectively.

* The late fee is 4 annas for each registered or unregistered article of the Letter Mail to any place in the countries named above except for Aden, Burma, Ceylon and Port Blair, the late fee for which is ½ anna for unregistered articles and 2 annas for registered articles. Letters are accepted with late fee only on occasions when a direct mail is closed by the Calcutta G. P. O. for Foreign countries

† When there is no direct mail from Calcutta, correspondence for South Africa and Mauritius posted up to 5-15 P.M. in the Calcutta G. P. O is despatched to Bombay and correspondence for Australia, New-Zealand and Japan posted up to 4-15 P.M., to Colombo for transmission by the first available steamer.

Calcutta, G. P. O., the 14th July 1923.

H. M. RICHARDSON, Presidency Postmaster.

## CINCHONA FACTORY PRODUCTS.

BY order of the Government of Bengal Cinchona Factory Products will be sold by the **Superintendent, Juvenile Jail, Alipore,** at the undernoted rates from the 1st June 1923 :-

### Quinine Sulphate.

| | |
|---|---|
| For 60 lbs and above in one delivery ... ... ... ... | Rs 27 per lb |
| For 6 lbs and over but less than 60 lbs. in one delivery ... .. ... | " 28 " |
| For any quantity less than 6 lbs. ... ... . ... ... | " 29 " |

### Quinine Hydrochloride.

| | |
|---|---|
| For 60 lbs and above in one delivery ... ... ... . | Rs. 35 per lb |
| For 6 lbs and over but less than 60 lbs. in one delivery ... ... ... | " 36 " |
| For any quantity less than 6 lbs. ... ... ... .. ... | " 37 " |

### Quinine Di-Hydrochloride.

| | |
|---|---|
| For 60 lbs and above in one delivery ... ... ... ... | Rs 38 per lb. |
| For 6 lbs and over but less than 60 lbs. in one delivery . ... | " 39 " |
| For any quantity less than 6 lbs ... ... ... ... | " 40 " |

### Cinchonidine Sulphate and Cinchonine Sulphate.

| | |
|---|---|
| For not less than 6 lbs in one delivery ... ... ... ... | Rs 12 per lb |
| For any quantity less than 6 lbs ... ... .. ... .. | " 13 " |

### Cinchona Febrifuge Powder.

| | |
|---|---|
| For not less than 6 lbs in one delivery ... .. ... . | Rs 8 per lb. |
| For any quantity less than 6 lbs ... ... ... ... .. | " 9 " |

### Cinchona Febrifuge Tablets.

| | |
|---|---|
| For not less than 6 lbs in one delivery ... ... . | Rs 9 per lb. |
| For any quantity less than 6 lbs. ... ... ... ... . | " 10 " |

### Quinoidine Tablets.

| | |
|---|---|
| For not less than 6 lbs in one delivery ... ... ... ... | Rs 7 per lb |
| For any quantity less than 6 lbs. ... ... ... .. .. | " 8 " |

### Quinoidine (in Mass).

| | |
|---|---|
| For not less than 6 lbs. in one delivery ... ... ... .. | Rs 6 per lb. |
| For any quantity less than 6 lbs. ... ... . ... ... | " 7 " |

### Quinidine Sulphate.

| | |
|---|---|
| For any quantity less than 6 lbs ... ... ... ... ... | Rs 39 per lb |

**Quinine Sulphate** is for sale to Government Institutions and Missionaries only. It is not for sale to Private Firms or the General Public.

**Cinchona Febrifuge** in Powder and Tablet form (when in stock) is for sale to Government Institutions, Missionaries and the General Public.

Quinine Sulphate will be supplied to Hospitals and Dispensaries of this Presidency only at the wholesale rate of Rs. 27 per lb., irrespective of quantities For all other purchasers the rates given above will apply.

*Transit charges extra in every case*

The system of payment is by—*Cash in advance*—by "*Treasury Chalans*" which should accompany the order or indent.

In cases where this is not possible, payment should be made by "*Remittance Transfer Receipts*" or crossed "*Cheques*"

Indents unaccompanied by Cash in advance will be sent Value Payable Post

In the case of *Government Officers* payments will be recovered by *Book Transfer* or *Countersigned Invoices* in the event of *Cash* not accompanying the Indent by "*Treasury Chalans.*" *R T R*, or *Cheque.*

2. Price and postage must accompany the price of the drug (when the drug is required by post)

3. The name of the Railway and Steamer Station or Post-Office must be written distinctly when the parcels are required by Rail, Steamer or by Post

4. A scale of postage is given below :—

For ½ lb. 4 annas, ¾ lb 5 annas, 1 lb 6 annas, 1½ lbs 11 annas, 2 lbs 14 annas, 2½ lbs. Re 1-1, 3 lbs. Re. 1-1, 3½ lbs. Re. 1-4, 4 lbs Re 1-7, 4½ lbs. Re 1-13, 5lbs. Re 1-13, 6 lbs Rs 2

Local sale at the Jail gate from 7 to 10 A.M., and 2 to 4 P.M

*N.B.*—Postage stamps are not accepted as revenue.

**Government reserve the right to alter the price without notice.**

## GOVERNMENT PUBLICATIONS FOR SALE.

**By the Superintendent, Government Printing, India, 8, Hastings Street, Calcutta,**

From whom a General Catalogue of all Government Publications may be obtained gratis.

### AGENTS FOR THE SALE OF GOVERNMENT PUBLICATIONS.

#### EUROPE.

Constable & Co., 10, Orange Street, Leicester Square, London, W C
Kegan Paul, Trench, Trubner & Co, 68-74, Carter Lane, E C., and 39, New Oxford Street, London, W C
Bernard Quaritch, 11, Grafton Street, New Bond Street, London, W.
P S King & Sons, 2 & 4, Great Smith Street, Westminster, London, S. W
H. S King & Co, 65, Cornhill, E C, and 9, Pall Mall, London, W
Grindlay & Co, 54, Parliament Street, London, S W
Luzac & Co, 45, Great Russell Street, London, W C
W. Thacker & Co., 2, Creed Lane, London, E C.
T Fisher Unwin, Ltd, 1, Adelphi Terrace, London, W C
Wheldon & Wesley, Ltd., 2, 3 & 4, Arthur Street, New Oxford Street, London, W. C 2
Messrs East and West, Ltd, 3, Victoria St., London, S. W. 1.
B H. Blackwell, 50 & 51, Broad Street, Oxford
Deighton Bell & Co, Ltd, Cambridge
Oliver & Boyd Tweeddale Court, Edinburgh.
E Ponsonby, Ltd, 116, Grafton Street, Dublin
Ernest Leroux, 28, Rue Bonaparte, Paris
Martinus Nijhoff, The Hague, Holland
Otto Harrassowitze, Leipzig
Friedlander and Sohn, Berlin.

#### INDIA AND CEYLON.

Thacker, Spink & Co, Calcutta and Simla.
Newman & Co., Ltd., Calcutta.
R Cambray & Co, Calcutta.
S K. Lahiri & Co, Calcutta.
B Banerjee & Co, Calcutta.
The Indian School Supply Depot, 309, Bow Bazar Street, Calcutta, and 226, Nawabpur, Dacca.
Butterworth & Co (India), Ltd, Calcutta.
Rai M C Sarcar Bahadur & Sons, 90-2A, Harrison Road, Calcutta
The Weldon Library, 57, Park Street, West, Calcutta.
Standard Literature Company, Limited, Calcutta.
Lal Chand & Sons, Calcutta
Association Press, Calcutta.
The International Buddhist Book Depôt, 4, Chandney Chowk, 1st Lane, Calcutta
Higginbotham & Co., Madras
V. Kalyanarama Iyer & Co, Madras.
G. A Natesan & Co, Madras
S. Murthy & Co, Madras
Thompson & Co, Madras
Temple & Co, Madras.
P R. Rama Iyer & Co, Madras.
Vas & Co, Madras.
E. M. Gopalakrishna Kone, Madura.
Thacker & Co., Ltd., Bombay
D B Taraporevala, Sons & Co, Bombay.
Mrs Radhabai Atmaram Sagoon, Bombay.
Sunder Pandurang, Bombay.
Gopal Narayan & Co, Bombay.
Ram Chandra Govind & Son, Kalbadevi, Bombay
Proprietor, New Kitabkhana, Poona
The Standard Bookstall, Karachi, Rawalpindi and Murree.
Mangaldas Harkisandas, Surat.
Karsandas Narandas & Sons, Surat
A H Wheeler & Co, Allahabad, Calcutta and Bombay
N. B Mathur, Supdt., Nazir Kanun Hind Press, Allahabad
Munshi Seeta Ram, Managing Proprietor, Indian Army Book Depot, Juhi, Cawnpore.
Rai Sahib M Gulab Singh & Sons, Mufid-i-Am Press, Lahore and Allahabad
Rama Krishna & Sons, Lahore
Oxford Book and Stationery Co, Delhi
Supdt, American Baptist Mission Press, Rangoon
Proprietor, Rangoon Times Press, Rangoon
The Modern Publishing House, Ltd, 70, Sparks Street, Rangoon
Manager, the "Hitavada," Nagpur
S. C. Talukdar, Proprietor, Students & Co, Cooch Behar.
A M & J Ferguson, Ceylon
Manager, Educational Book Depôts, Nagpur and Jubbulpore*
Manager of the Imperial Book Depôt, 63, Chandney Chowk Street, Delhi*
Manager, "The Agra Medical Hall and Co-operative Association, Ltd" (Successors to A. John & Co, Agra)*
Supdt, Basel Mission Book and Tract Depository, Mangalore*
P Varadachary & Co, Madras.*
Ram Dayal Agarwala, 184, Katra, Allahabad*
D C Anand & Sons, Peshawar.*
Manager, Newal Kishore Press, Lucknow*
Maung Lu Gale, Proprietor, Law Book Depôt, Mandalay.*
Times of Ceylon Co., Ltd.†

*Agents for the sale of Legislative Department publications only.
†Agents for the sale of Archæological publications only.

NOTICE—Books and Acts required for private use must be purchased. Applications should be accompanied by a remittance, unless it is wished that the book should be sent by value-payable post, in which case, besides the ordinary postage, an additional charge is made for registration and commission. Books and Acts required for the public service should be obtained through the Local Government to whom the applicant is subordinate Application for Government publications which are no longer in print should be made to the Department of the particular Government under whose orders they were originally issued

### LIST OF NEW BOOKS PUBLISHED DURING THE CURRENT QUARTER.

*(The amounts within parentheses are for packing and postage.)*

#### LEGISLATIVE DEPARTMENT.

ACTS.

1922.

**The Indian Criminal Law Amendment Act, 1908 (Act XIV of 1908),** as modified up to 1st May, 1923. Anna 1-6 ( ).

## HOME DEPARTMENT.

**India's Parliament at Delhi, 1923.** Royal 8vo, paper cover As 4 (2a)

## DEPARTMENT OF EDUCATION AND HEALTH.

**Census of India, 1921, Volume XVIII—Central India Agency, Report and Tables.**—Foolscap, board. Rs. 12-12 (13a)

### BUREAU OF EDUCATION

**Pamphlet No. 14.**—Question papers set for the Indian (Imperial) Police Examination, 1922. Royal 8vo, paper cover. As. 8 (2a)

### IMPERIAL RECORD DEPARTMENT.

**List of the Heads of Administration in India and of the India Office in England, corrected up to 1st February 1923.** Royal 8vo, board Re 1 (3a)

## DEPARTMENT OF REVENUE AND AGRICULTURE.

### FOREST BRANCH

**The Indian Forest Records, Volume IX, Part VI.** Royal 8vo paper cover As 3 (1a)

### METEOROLOGICAL DEPARTMENT

**Part I of Volume XXIV of the Memoirs of the Indian Meteorological Department, "On the seat of activity in the upper air," by P. C. Mahalanobis, Esq., M.A. (Cantab.).** Pages 1—9 Re 1

**Part II of Volume XXIV of the Memoirs of the Indian Meteorological Department, "On errors of observation and upper air relationships," by P. C. Mahalanobis, Esq., M.A. (Cantab.).** Pages 10—19 Re 1

## PUBLIC WORKS DEPARTMENT.

**Classified List of Establishment corrected up to 31st December 1922.** Royal 8vo, paper cover Rs. 2 (4a)

## FOREIGN AND POLITICAL DEPARTMENT.

**Report on the administration of Ajmer-Merwara for 1921-1922.** Foolscap, limp Rs 5-8 (7a)

## FINANCE DEPARTMENT.

**History of Services of Gazetted and other Officers of the Post Office, corrected) up to 1st July 1922.** Royal 8vo, limp Rs 5-8 (9a)

**Report of the Indian Retrenchment Committee, 1922-23.** Royal 8vo, board Rs. 2 (10a) and Foolscap, paper cover. Rs 3 (7a).

### AUDITOR GENERAL

**An Introduction to Indian Government Accounts.** Royal 8vo, limp. As 4 (3a.)

**Audit Instructions (issued up to 31st October 1922).** Royal 8vo, paper cover As 8 (1a)

## DEPARTMENT OF COMMERCE.

**Report of the Machinery Committee, 1922.** Royal 8vo, paper cover As. 2 (1a)

**Report on the work of the Imperial Shipping Committee, 1920 to 1922.** Royal 8vo, stitched. As 5 (1a)

**Tariff Schedules for the nine months April to December 1923.** Foolscap, stiched As 6 (2a.)

### COMMERCIAL INTELLIGENCE DEPARTMENT

**Accounts relating to the Sea-borne Trade and Navigation of British India for February, March and April 1923 (Nos. 11 and 12 of 1922-23 and No. 1 of 1923-24.)** Royal 8vo, paper cover. Re. 1-4 (4a.) each.

**Accounts relating to the Trade by Land of British India with Foreign Countries for October and November 1922 (Nos. 7 and 8 of 1922-23).** Royal 8vo, paper cover As. 8 (4a) each.

**Agricultural Statistics, British India, 1921-22.**—Summary Tables showing the Total Area, Area Cultivated and Uncultivated, Area under Irrigation and Area under different crops in British India in Agricultural year 1921-22. Foolscap, stitched As. 4 (1a)

**Indian Customs Revenue.**—Return showing the total gross Indian Sea and Land Customs Revenue (excluding Salt Revenue) in the twelve months, April to March, 1922 23, as compared with the corresponding period of the preceding five years. Foolscap Pies 6 (6p)

**Joint Stock Companies for February, March and April 1923.** As 3 (6p.) each.

**Joint Stock Companies in British India and in the Indian States of Mysore, Baroda, Gwalior, Indore and Travancore, 1920-21 (Seventh issue).** Foolscap, paper cover. Rs 6-8 (13a)

**Monthly Statistics of Cotton Spinning and Weaving in Indian Mills, January, February and March 1923 (Nos. 10, 11 and 12 of 1922-23).** Royal 8vo, paper cover. As. 2 (1a) and As 2 (2a) and As 2 (1a) respectively.

**Return showing the total gross Indian Sea and Land Customs Revenue (excluding Salt Revenue) in the month of April 1923, as compared with the corresponding month of the preceding five years.** Pies 6 (6p)

**Review of the Trade of India in 1921-22 (48th issue).** Foolscap, limp Rs 2 (5a)

**Wholesale and Retail (Fortnightly) Prices.** Return showing the Wholesale and Retail Prices of certain staple, Cereals, Pulses, Oilseeds, Sugar (Raw), Salt, etc, in India by Districts for the fortnights ending the 15th and 28th February, 15th and 31st March and 15th and 30th April 1923 Foolscap, stitched As 6 (1a) each

## ARMY DEPARTMENT.

**Army Regulations, India, Volume II, 1923 (Interleaved).** Royal 8vo, limp Re 1 4 (8a)

**Gun Drill for 18-pounder Q. F. Gun, Marks 1 to 11, Carriages, Marks 1 to 11 in Urdu.** Rs. 4-9 (2a)

**India's Contribution to the Great War.** Royal 8vo, cloth. Rs 5 (6a)

**Infantry Training, Volume II, War 1921 (Provisional) in Urdu,** Re 1 (3a), **in Hindi,** As 13 (3a), and **in Gurmukhi.** Re 1-5 (3a)

**Infantry Training, 1921 (Provisional) in Roman Urdu.** As 8 (2)

**Light Gun Instructional Targets.** As 12 (2a)

**Regulations for the Equipment of the Army (India), Part 2. Section V.—C. Station Family Hospitals.** As 4 (2a)

**Regulations for the Equipment of the Army (India), Part 2. Section VI.—A Central M. T. Stores Depot.** As 3 (1a)

**Regulations for the Equipment of the Army (India), Part 2, Section XVA.**—An Armoured Car Company and Light Repair Section Re 1 (2a)

**Report on the Examination of Officers for promotion held in October 1922.** Re 1-8 (3a)

**Royal Warrant for the pay, appointment, promotion and non-effective pay of the Army, 1922.** Re 1-1 (5a)

**War Equipment Table, India.**—An Ordnance Mobile Workshop Army Department, 1922 As. 13 (2a)

## DEPARTMENT OF INDUSTRIES.

**Report of the Railway Industries Committee.** Royal 8vo, paper cover As 3 (1a.)

**Rules made under Section 20 of the Indian Mines Act, 1901 (VIII of 1901), applicable to Coal Mines in sheet form.** Foolscap, stitched As 2 (3a)

## RAILWAY BOARD.

**Indian Railways.**—Schedule of maximum, minimum and recommended dimensions 2′ 0″ Gauge, 1922, Re. 1 (1a) 2′ 6″ Gauge, 1922, Re 1 (2a) and 2′ 0″ and 2′ 6″ Gauge, 1922 Re 1-8 (3a)

**Technical paper No. 233.**—Volume III of the Fourth Report of the Indian Railway Bridge Committee containing Appendix 6B of the Report. Foolscap, paper cover As 6 (2a)

## LIST OF NEW BOOKS PUBLISHED DURING JANUARY TO MARCH 1923.

*(The amounts within parentheses are for packing and postage.)*

## LEGISLATIVE DEPARTMENT.

**Council of State Debates, Vol. III, Part I.**—Official Report, 1922 (bound in full cloth) Rs 5-8 (12a.)

**Legislative Assembly Debates, Vol. III, Part I.**—Official Report, 1922 (bound in full cloth). Rs 6. (Re. 1.)

**A consolidated Digest of Indian Law Cases from 1910 to 1921,** compiled under the orders of the Government of India, by S. Webb-Johnson, Esq, LL B. (Hons), Assistant Solicitor to the Government of India, Vol I, Rs. 10 (Re. 1-8.) Vol. II. Rs. 10 (Re. 1-8)

ACTS

**1867.**

**No. XXV.**—Press and Registration of Books, modified up to 1st July 1922, in Urdu Stitched A 1 3 (1*a*).

**1898.**

**No. VI.**—Indian Post Office as modified up to the 1st July 1922, in Urdu Royal 8vo, stitched. As 3-3 (2*a*)

**1911.**

**No. 12.**—Indian Factory, in Urdu Stitched As 2-6 (1*a*)

**1922.**

**No. 16.**—The Indian Extradition (Amendment) in Urdu Pies 3 (6*p*)

**No. 18.**—The Negotiable Instrument (Amendment), in Urdu Pies 3 (6*p*)

**No. 19.**—Court Fees (Amendment), in Urdu Pies 3 (6*p*)

**No. 22.**—Incitement to Disaffection, in Urdu Pies 3 (6*p*)

**1923.**

**No. 1.**—Criminal Tribes (Amendment), in Urdu Pies 3 (6*p*)

## HOME DEPARTMENT.

**Appendix to the Report of the Committee appointed to consider the Racial Distinctions in Criminal Procedure applicable to Indians and Non-Indians.**—Evidence taken before the Committee Foolscap, paper cover Rs 3-12 (10*a*)

**Report of Indian Arms Rules Committee.** Royal 8vo, paper cover. As 2 (1*a*)

**Report of the Committee appointed to consider the Racial Distinctions in Criminal Procedure applicable to Indians and Non-Indians.** Foolscap, paper cover As 9 6 (3*a*)

**Report of the Committee on Indian Students, 1921-22: Part I—The Report and Appendices. Part II.—The Evidence.** Foolscap, paper cover Rs 3-12 (Re 1)

## DEPARTMENT OF EDUCATION AND HEALTH.

**Census of India, 1921, Volume XXIV.**—Rajputana and Ajmer-Merwara, Part I—Report Foolscap, board Rs 5-8 (14*a*)

**Census of India, 1921, Volume XXIV.**—Rajputana and Ajmer-Merwara, Part III—Administrative volume Foolscap, board Rs 2 (7*a*)

**The Private Diary of Ananda Ranga Pillai from 1736 to 1761, Volume VIII.** Royal 8vo, cloth bound Rs 3 (14*a*)

**Report of the Indian Students' Department for the year April 1st, 1921 to March 31st, 1922.** Foolscap, stitched As 4 (2*a*)

## IMPERIAL RECORD DEPARTMENT.

**Fauna of British India, Birds, Volume I (Second Edition).** Royal 8vo, cloth. Rs 26 4 (14*a*.)

## DEPARTMENT OF REVENUE AND AGRICULTURE.

**Report by the Right Hon'ble V. S. Srinivasa Sastri, P. C., regarding his deputation to the dominions of Australia, New Zealand and Canada.** Royal 8vo, paper cover As. 3 (1*a*.)

### FOREST BRANCH.

**Forest Bulletin No. 48.**—Note on Kindal or Hongal. Super-royal, paper cover As. 6 (2*a*.)

**Forest Bulletin No. 51 of 1922.**—An investigation of certain Factories concerning the Resin Industry in Pinus longifolia. Royal 8vo, paper cover. As. 8 (1*a*)

**Forest Research in India, 1921-22.** Royal 8vo, limp Rs 2 (5*a*).

**Indian Forest Records, Volume IX, Part V.** Royal 8vo, paper cover. Rs. 2-8 (4*a*.)

**The Methods of preparing Volume and Money Yield Tables for Teak woods and Volume and Form Factor Tables for Teak trees, from data collected in the Nilambur Teak Plantations of the South Malabar Division, Madras, South India, 1918-19.** Foolscap, board. Rs. 9 (10*a*.).

## METEOROLOGICAL DEPARTMENT.

**Part III of Volume XXIV of the Memoirs of the Indian Meteorological Department "On exposures of thermometers in India," by J. H. Field, Esq., M.A., Director, Agra Observatory.** Pages 21-73 Re 1-8

## FINANCE DEPARTMENT.

**Civil Estimates of Provincial Government for 1922-23.** Foolscap, board. Rs. 3 (Rs. 2-14)

**Classified List of Officers in the Finance Department, Government of India, and in Departments under its Administrative Control, 31st December 1922.** Royal 8vo, paper cover. As 4 (2a)

## DEPARTMENT OF COMMERCE.

**Final Report of the Imperial Shipping Committee on the deferred rabits system.** Royal 8vo, stitched As. 5 (2a)

**Merchant Shipping.**—Return of Wrecks and Casualties in Indian Water for the year 1921 Foolscap, limp. Rs 3 (2a)

**The Indian Life Assurance Year-book, 1921-22 (Ninth Issue).** Foolscap, paper cover Re 1-8 (5a)

## COMMERCIAL INTELLIGENCE DEPARTMENT.

**Accounts relating to the Sea-borne Trade and Navigation of British India for November and December 1922 and January 1923 (Nos. 8, 9 and 10 of 1922-23).** Royal 8vo, paper cover. Re 1-4 (4a)

**Accounts relating to the Sea-borne Trade and Navigation of British India for the Calendar year 1922.** Royal 8vo, paper cover Re 1 (3a)

**Accounts relating to the Trade by Land of British India with Foreign Countries for July, August and September 1922 (Nos. 4, 5 and 6 of 1922-23).** Royal 8vo, paper cover. As 8 (2a)

**Agriculture Statistics of India, 1920-21, Volume I (thirty-seventh issue).** Foolscap, limp. Rs 2-8 (11a)

**Annual Statement of the Sea-borne Trade of British India with the British Empire and Foreign Countries for the fiscal year ending 31st March 1922, Volume I.** Foolscap, limp Rs 6-8 (Re 1-6a)

**Crop Forecast—**

Final General Memorandum on the Sesamum (Til or Jinjili) Crop, 1922-23 Pies 6 (6p)

First Forecast Winter Oilseeds (Rape, Mustard and Linseed), 1922-23. Pies 6 (6p)

First General Memorandum on the Indigo Crop of 1922-23. Pies 6 (6p)

Second Rice Forecast, 1922-23. Pies 6 (6p)

Third Cotton Forecast, 1922-23. Pies 6 (6p).

**Estimates of Area and Yield of Principal Crops in India, 1921-22 (24th issue).** Foolscap, limp As 8 (3a)

**Indian Customs Revenue—**

Return showing the total gross Indian Sea and Land Customs Revenue (excluding Salt Revenue) in the nine months, April to December 1922, as compared with the corresponding period of the preceding five years. Foolscap Pies 6 (6p)

Return showing the total gross Indian Sea and Land Customs Revenue (excluding Salt Revenue) in the ten months, April to January 1922-23, as compared with the corresponding period of the preceding five years. Foolscap Pies 6 (6p.)

Return showing the total gross Indian Sea and Land Customs Revenue (excluding Salt Revenue) in the eleven months, April to February 1922 23, as compared with the corresponding period of the preceding five years. Foolscap. Pies 6 (6p.)

**Joint Stock Companies, November and December 1922 and January 1923.** As. 3 (1a.) each.

**Monthly Statistics of Cotton Spinning and Weaving in Indian Mills for September, October, November and December 1922 (Nos. 6, 7, 8 and 9 of 1922-23).** Royal 8vo., paper cover. As 2 (1a) each

**Prices and Wages in India (37th issue).** Foolscap, limp. Rs. 2 (8a.)

**Return showing the imports into, and Exports from, Chief Ports of Wheat, Jute, Cotton and Rice, for the weeks ending 9th, 16th, 23rd and 30th December 1922.** Foolscap. Pies 6 (6p.)

**Statements showing Progress of the Co-operative Movement in India during the year 1921-22.** Foolscap, limp. Re. 1-8 (3a.)

**Statistics of Factories subject to the Indian Factories Act (XII of 1911) for the year ending December 31st, 1921.** Foolscap, paper cover. Re. 1 (3a)

**Statistical Tables relating to Banks in India, 1921.** Foolscap, limp. Rs 2 (3a)

**Tariff Schedule for the twelve months January to December 1922.** Foolscap, stitched As. 6 (1a)

**Wholesale and Retail (Fortnightly) Prices—**

Return showing the Wholesale and Retail Prices of certain Staple, Cereals, Pulses, Oilseeds, Sugar (Raw), etc, in India by Districts for the fortnights ending the 15th and 30th November, 15th and 31st December 1922 and 15th and 31st January 1923 Foolscap, stitched As. 6 (1a.) each

## ARMY DEPARTMENT.

**Gun Drill for 3·7 inch Q. F. Howitzer, Mark I, Carriage Mark I, 1st Edition, January 1921, in Urdu.** Re 1-6 (2a.)

**Gun Drill for 4·5 inch Q. F. Howitzer, Marks I and II, Carriage Mark I, in Urdu.** As 9 (2a)

**Hand-books for the Indian Army Punjabi Musalmans, 1922.** Royal 8vo, board Rs 4-12 (5a)

**Provisional Dress Regulations, corrected up to 1st October 1922.** As 2 (1a)

**Regulations for the Equipment of the Army (India), Part 2- Section 1-D.—Indian Infantry (except Pioneers), Training Battalions.** As 2 (1a)

**Regulations for the Equipment of the Army (India), Part 2—**

**Section I-E.**—Indian Pioneer Training Battalions As 6 (2a)

**Section III-C.**—Cavalry Brigade Training Company As 4 (1a)

**Regulations for the Equipment of the Army (India), Part 2**—*contd*

**Section X-F.**—No 2 (Wireless) Company Corps Signals Re 1 (2a)

**Section X-A.**—Engineer Units, Divisional Head-quarters Company As 8 (2a)

**Section X-B.**—Engineer Units—Field Troop, Sappers and Miners As 9 (2a)

**Section X-K.**—Engineer Units—A Field Company As 8 (2a)

**Section X-M.**—Engineer Units—A Railway Company As. 10 (2a.)

**Section X-N.**—Engineer Units—A Bridging Train As. 8 (2a)

**Regulations for the Army Certificates of Education (issued with Army Order for June 1922).** As 2 (1a)

**War Equipment Table, India.**—Head-quarters of a Horse Artillery Brigade A. 1-9 (1a)

**War Equipment Table (India), Survey Units.** As 3 (1a.)

## DEPARTMENT OF INDUSTRIES.

**Bulletins of Indian Industries and Labour:—**

**No. 29.**—Notes on Glass Manufacture Royal 8vo, paper cover. Re 1 (3a)

**List of Officers in the Department of Industries, Government of India, including the offices subordinate to it and in the Surplus Stores Organisation, corrected up to 1st January 1923.** Royal 8vo, paper cover. Re. 1-8 (2a)

**Journal of Indian Industries and Labour, Volume III, Part I, February 1923.** Royal 8vo, paper cover. Re. 1-8 per part or Rs 4-8 per volume of 4 parts Postage free

**Rules made under Section 20 of the Indian Mines Act, 1901 (Volume VII of 1901), applicable to all Mines.** As. 2 (1a.)

**Rules made under Section 20 of the Indian Mines Act, 1901 (VIII of 1901), applicable to Coal Mines.** Foolscap, stitched. As. 2 (2a.)

## RAILWAY BOARD.

**Classified List of State Railway Establishment and Distribution Return of Establishment of all Railways, corrected up to December 1922.** Royal 8vo, paper cover Re. 1-8 (4a)

**History of services of the officers of the Engineer and State Railway Revenue Establishments.** Royal 8vo, limp Rs 2-8 (7a)

**Indian Railways in 1921-22. Administration Report, Volume I.** Foolscap, limp. Rs 3-8 (6a.)

**Indian Railways in 1921-22. Administration Report, Volumes I and II (Appendices).** Foolscap, limp Rs 3 8 (9a)

**Technical Paper No. 230.**—Notes on the Creosoting of Railway Sleepers and Timbers in England Foolscap, paper cover. As 4 (2a)

**Technical Paper No. 231.**—Factors in the Location and Lay out of Locomotive repair shops Foolscap, paper cover Re 1-8 (6a.)

**Technical Paper No. 232.**—Factories in the Location and Lay out of Locomotive repair shops, supplements. Foolscap, paper cover Rs 2-8 (6a)

## LIST OF BOOKS FOR SALE AT THOMASON COLLEGE, ROORKEE.

**Notes on Lawn Tennis, Rowing and Sculling for Beginners.** By Captain E W. C Sandes, R.E. Paper cover As 10

**Thomason Civil Engineering College Manual, No. XIV—**

Surveying, Part I Originally compiled by Lieutenant-Colonel F Firebrace, R E, re-written and revised by C J Veale, Esq, Professor of Surveying and Drawing, II Edition, 1915 Rs 2-8

Surveying, Part II Originally compiled by Lieutenant Colonel F Firebrace R E, re-written and revised by C J. Veale, Esq Professor of Surveying and Drawing, II Edition, 1915. Rs 2-6

**Thomason Civil Engineering College Manual, Section V, Examples of Estimating.**—Originally compiled by the late Ensign Peter Keay, Head Master, Upper Subordinate Class, Thomason Civil Engineering College, Roorkee, 8th Edition, 1915, entirely revised by F W Hart, Instructor in Applied Science, Thomason Civil Engineering College Rs 3-8

## LIST OF NEW BOOKS AND PERIODICALS FOR SALE AT THE LIBRARY OF THE ASIATIC SOCIETY OF BENGAL, 1, PARK STREET, CALCUTTA.

### SOCIETY'S PUBLICATIONS.

**Journal and Proceedings—**

**Vol. XVI, Nos. 6-8, Vol. XVII, No. 2.** Rs. 2 each

**Vol. XVII, No. 1.** Rs 4

**Vol. XVII, No. 2.** Rs 2

**Vol. XVII, No. 3.** Rs 2.

**Memoirs—**

**Vol. VI, No. 7, Zoological Results of a Tour in the Far East. Part VI.—Echinoids from brackish water, with the description of a new marine species, from the Andamans.** By Dr B Prashad. **Les Orthopteres Cavernicoles de Birmanie et de la Peninsula Malaise.** Par L. Chopard Rs 2.

### BIBLIOTHECA INDICA.

**The Odes of Shaikh Muslih-ud-din Sa'di Shirazi.** Fasc, 3 Rs 1-8.

**Baudhayana Srauta Sutram, Vol. 3.** Fasc 4 As. 10

**Mohabhayam prodipodovat, Vol, 4.** Fasc 5 As 10

**Yogasastra.** Fasc 6 Re. 1-4.

**Mamtakhabul Lubab, Part 3.** Fasc 5 Re. 1

**Akbarnama (Eng.) Vol. 3.** Fasc 13 Re 1-4

**Kirtyaratnakar.** Fasc 1 As 10.

**Sivaparinaya.** Fasc 3. As. 10.

**Tantravartika (Eng.).** Fasc 16. Rs. 1-4.

**Nayavartika Tatparya Parisudhi.** Fasc 7. Rs. 10.

## LIST OF NEW BOOKS PUBLISHED BY THE GEOLOGICAL SURVEY OF INDIA.

**Bibliography of Indian Geology and Physical Geography with an annotated Index of Minerals of Economic Value.** By T. H. D. LaTouche, M.A., F.G.S., Fellow of the Asiatic Society of Bengal. Part I—Bibliography of Geology of India Part II—An Annotated Index of Mineral of Economic Value. Rs 4 each.

**Bibliography of Indian Geology.** Part II—Index of Localities. By T. H. D. LaTouche, M.A., F.G.S., F.A.S.B. Re. 1.

**Memoirs of the Indian Geological Survey of India—**

Volume VI, Part 2, Reprinted 1921 By T. W. H Hughes, Bokaro Coal-field. By V. Ball, Ramgurh Coal-field By W. T. Blanford Traps of Western and Central India. Rs. 2

Volume XL, Part 3. By E. H Pascoe, M.A (Catab), D.Sc (Lond), F.G.S, Director Geological Survey of India Petroleum in the Punjab and North-West Frontier Province Rs. 5.

Volume XLI, Part 1, Reprinted 1922 By late Professor V. Ball, C.B, LL D, F R S, entirely revised and largely re-written by R. R Simpson, M Sc, Inspector of Mines, formerly Mining Specialist to the Geological Survey of India Coal-field of India (plates 1-3). Rs. 5.

Volume XLII, Part 1. By J. Coggin Brown, M Sc., F G S, Assistant Superintendent, Geological Survey of India The Burma Earthquake of May 1922. Rs. 3.

Volume XLII, Part 2 By R D. Oldham, F.R S The structure of the Himalayas, and of the Gangetic Plain, as elucidated by Geodetic Observations in India Rs 3

Volume XLIII, Part 2. By J Coggin Brown, M.Sc., F G S, Assistant Superintendent, Geological Survey of India. A Descriptive Catalogue of the Meteorites comprised in the collection of the Geological Survey of India, Calcutta (on August 1st, 1914) Re. 1.

Volume XLIV, Part 1 By C S. Middlemiss, C I E, F.R S, Late Superintendent, Geological Survey of India Geology of Idar State. Rs. 5.

Volume XLIV, Part 2. By J. Coggin Brown, O B E., D Sc, Superintendent, and A M Heron, D.Sc, Officiating Superintendent, Geological Survey of India The Geology and Ore Deposits of the Tavoy District Rs. 6-8.

Volume XLV, Part 1. By A M Heron, B.Sc, F.G S, Assoc Inst C E, Assistant Superintendent, Geological Survey of India. The Geology of North-Eastern Rajputana and adjacent Districts Rs 3

Volume XLVI, Part 1 By Murray Stuart, D Sc., offg Superintendent, Geological Survey of India. The Srimangal Earthquake of 8th July 1918 Rs. 3

Volume XLVII, Part 1 By J. Coggin Brown, O B E, M I.M E, Assistant Superintendent, Geological Survey of India. The Mines and Mineral Resources of Yunnan, with short accounts of its agricultural products and trade. Rs 8.

Volume XLVIII, Part 1 By E H Pascoe, M A (Cantab), D Sc (London), F G S., Director, Geological Survey of India. Geological Notes on Mesopotamia with special reference to occurrences of Petroleum (with 11 maps). Rs. 5.

**Memoirs of the Geological Survey of India, Palæontologia Indica, New Series—**

Volume III, Memoir No. 2. By S S. Buckman, F.G.S The Brachiopoda of the Namyau Beds, Northern Shan States, Burma (with plates I—XXI) Rs 5.

Volume V, Memoir No 3. By Prof Henry Douville Le Crétacé et l'éocené du Tibet Central Rs 4.

Volume VI, Memoir No 1 By F. R. Cowper Reed, Sc.D, F G.S. Supplementary Memoir on New Ordovician and Silurian Fossils from the Northern Shan States (with plates I to XII). Rs. 3

Volume VI, Memoir No. 2 (with plates I to XVI). By F R. Cowper Reed, M.A., Sc D, F G S. Devonian Fossil from Chitral and the Pamirs. Rs. 4

Volume VI, Memoir No. 3 (with plates I to VIII). By F. R Cowper Reed, M.A, Sc D, F.G S Ordovician and Silurian Fossils from Yunnan. Rs. 2.

Volume VII, Memoir No. 1. By A. C. Seward, Sc.D., F.R.S., and B. Sahni, M.A., M.Sc., Indian Gondwana Plants: a revision (Plates I to VII). Rs. 1-12.

Volume VII, Memoir No. 2, By G. deP. Cotter, B.A., A.C.D. (Dub.), F.G.S. The Lamellibranchiata of the Eocene of Burma. Rs. 3-10.

**Records of the Geological Survey of India—**

Volume XLVII, Part 1. By H. H. Hayden, C.I.E., F.R.S., Director, Geological Survey of India: General Report of the Geological Survey of India for the year 1915 Guy E. Pilgrim, D.Sc., F.G.S., officiating Superintendent, Geological Survey of India: Some Newly Discovered Eocene Mammals from Burma. C. S. Fox, Mining, B.A., [illegible], Assistant Superintendent, Geological Survey of India: Miscellaneous Notes—Chemical Composition of the Red Shale of the Salt Range, Punjab, and corrected Note on the Age of the Tertiary of Siwa. Re. 1.

**Records of the Geological Survey of India—contd.**

Volume XLVII, Part 2. By L. Leigh Fermor, D.Sc., A.R.S.M., F.G.S., Superintendent, Geological Survey of India, and C. S. Fox, B.Sc., M.I.M.E., F.G.S., Assistant Superintendent, Geological Survey of India: The Deccan Trap Flows of Linga, Chhindwara District, Central Provinces. J. Coggin Brown, M.Sc., F.G.S., M.I.M.E., Assistant Superintendent, Geological Survey of India: A Note on the Iron ore deposits of Twinnge, Northern Shan States. Re. 1.

Volume XLVII, Part 3 By H H. Hayden, C I E, F.R S, Director, Geological Survey of India, and Ernest W. Vredenburg, Superintendent, Geological Survey of India. Obituary. R C Burton. The Mineral Production of India during 1915 Flemingostrea, an eastern group of Upper Cretaceous and Eocene Ostreidae (with plates 17 to 20) Re. 1

Volume XLVII, Part 4. By J. Coggin Brown, M.Sc F.G.S, M I M E., Assistant Superintendent, Geological Survey of India, Miss Ruth Holden, and H Walker, A R C S. Assistant Superintendent, Geological Survey of India: Contributions to the Geology of the Province of Yunnan in Western China. 5, Geology of Parts of the Salween and Mekong Valleys (with plates 21 to 28). A Fossil Wood from Burma (with plate 29) The Visuni and Ekh Khera Aerolites (with plates 30 to 33). Re. 1

Volume XLVIII, Part 1. By H H. Hayden, C I E F.R S, Director, Geological Survey of India, and G DeP. Cotter, B.A., F.G.S, Assistant Superintendent, Geological Survey of India General Report of the Geological Survey of India for the year 1916. A revised classification of the Gondwana System. Re. 1.

Volume XLVIII, Part 2. By H H. Hayden, C I.E., F R S., Director, Geological Survey of India, and Lieutenant G. E. Pilgrim, D.Sc, I.A R O., Assistant Superintendent, Geological Survey of India The Mineral Production of India during 1916. Preliminary Note on some recent Mammal Collections from the Basal Beds of the Siwaliks. Re. 1.

Volume XLVIII, Part 3 By L. Leigh Fermor, D.Sc, A.R S M., F G.S., Superintendent, Geological Survey of India, J. Coggin Brown, M.Sc., M. Inst. M M., M.I.M E, F.G S., Assistant Superintendent, Geological Survey of India, and A. M. Heron, B.Sc, F.G.S., Assoc Inst C.E, Assistant Superintendent, Geological Survey of India, on the Crystallography and Nomenclature of Hollandite (with plate 1). Geology and Ore Deposits of the Bawdwin Mines (with plates 2 to 8). Miscellaneous Notes—Monazite in Mergui and Tavoy. Re. 1.

Volume XLVIII, Part 4. A. M. Heron, B Sc., F.G.S., Assoc. Inst C E, Assistant Superintendent, Geological Survey of India, and late R. C. Burton, B Sc., F G S, I.A.R.O., Assistant Superintendent, Geological Survey of India. The Biana-Lalsot Hills in Eastern Rajputana (with plates 9—12). On the origin of the Laterite of Seoni, Central Provinces (with plate 13) Index. Re 1

Volume XLIX, Part 1. By H H. Hayden, C I E, F.R S., Director, Geological Survey of India. J. Coggin Brown, M.Sc., M Inst. M M., M.I M.E, F G S., Assistant Superintendent, Geological Survey of India, and R Fourtan. General Report of the Geological Survey of India for the year 1917. The Cassiterite Deposits of Tavoy. Les Echinides des "Bagh Beds" (Plates 1, 2). Re 1.

Volume XLIX, Part 2. By H. H Hayden, C.I.E., F R S., Director, Geological Survey of India, and R. D. Oldham, F.R.S. The Mineral Production of India during 1917. The Support of the Mountains of Central Asia. Re. 1.

Volume XLIX, Part 3. By E. S. Pinfold, B.A., F G.S., Stud. Inst. M.M., C S Middlemiss, C.I.E, F.G.S., and Lala Joti Parshad, B.A., F.G.S., Mineral Survey of Jammu and Kashmir State and Captain Murray Stuart, I.D F, D.Sc, F.G.S., Assistant Superintendent, Geological Survey of India. Notes on Structure and Stratigraphy in the Noth-West Punjab (with plates 4 and 5). Note on the Aquamarine Mines of Daso on the Braldu River, Shigar Valley Baltistan (with plates 6 to 10) Preliminary Note on the Srimangal Earthquake of July 8th, 1918 (with plates 11 and 12). Re. 1

Volume XLIX, Part 4. By C. S. Middlemiss, C.I.E., B.A., F.G.S., F.A.S.B., Superintendent, Mineral Survey of Kashmir, T H. D. LaTouche, M.A, F.G.S., F.A.S.B., and K. Hallowes, M.A. (Cantab.), F.G S., A.R.S.M., A. Inst M M., Assistant Superintendent, Geological Survey of India. Possible occurrence of Petroleum in Jammu Province. Preliminary Note on the Nar-Budhan Dome, of Koth Tehsil in the Panch Valley (with plates 13 to 16) The Submerged Forests at Bombay (with plates 17 to 19). On some Intra-Trappeans and a Silicified Lava from Hyderabad, S. India Re 1.

Volume L, Part 1. By H. H. Hayden, C.S.I., C.I.E, F R.S., Director, Geological Survey of India. General Report of the Geological Survey of India for the year 1918. Murray Stuart, D.Sc., Assistant Superintendent, Geological Survey of India. The Potash Salts of the Punjab Salt Range and Kohat (with plates 1 to 8). Murray Stuart, D.Sc., Assistant Superintendent, Geological Survey of India. Suggestions regarding the Origin and History of the Rock Salt Deposits of the Punjab and Kohat (with plates 9 to 25). Re. 1.

Volume L, Part 2. By J. Coggin Brown, O.B E., M.Sc., F.G.S., and A. M. Heron, B.Sc., F.G.S., Assistant Superintendents, Geological Survey of India. Distribution of ores of Tungsten and Tin in Burma (with plates 26 and 27). C. S. Middlemiss, C.I.E., B.A., F.G.S., F.A.S.B, Superintendent, Mineral Survey of Jammu and Kashmir State. On the Inclination of Thrust-plane of Rescarved Fault, between the Siwalik and Murree Zone of formation, near Kotli, Jammu Province (with plate 28). E. S. Pinfold, B.A., F.G.S. Two New Fossil Localities in the Garo Hills. G. DeP. Cotter, B.A., F.G.S., Assistant Superintendent, Geological Survey of India: Report on the Bawdwin Sulphur Mines (with plate 29). E. J. Beer. Miscellaneous Notes—Note on a spiral Impression on Lower Vindhyan Limestone (with plate 30). Re. 1.

**Records of the Geological Survey of India**—*contd.*

Volume L, Part 3. By H. H. Hayden, C.S.I., C.I.E., F.R.S., Director, Geological Survey of India. The Mineral Production of India during 1918 N Annandale, D.Sc., F.A.S.B., Director, Zoological Survey of India The Gastropod Fauna of old Lake-Beds in Upper Burma (with plates 31 to 33) Murray Stuart, D.Sc., F.G.S., Assistant Superintendent, Geological Survey of India. The Galena Deposits of North-Eastern Putao (with plates 34 to 38). Re. 1 only.

Volume L, Part 4. By G. H Tipper, M.A., F.G.S., F.A.S.B., Geological Survey of India On Pitchblende Monazite and other minerals from Pichhli-Gaya District, Bihar and Orissa (with plates 39 to 42) Murray Stuart, D.Sc., Assistant Superintendent, Geological Survey of India. Natural Gas in Bituminous Salt from Kohat (with plates 43 to 44) L L. Fermor, O.B.E., D.Sc., A.R.S.M., F.A.S.B., F.G.S., Superintendent, Geological Survey of India, The Mineral Resources of the Central Provinces (with plate 45) G H Tipper M.A., F.G.S., F.A.S.B. Miscellanous Note—Note on Sipyhite from the Nellore District, Madras Presidency Re. 1.

Volume LI, Part 1. By H H Hayden, C.S.I., C.I.E., F.R.S., Director General Report of the Geological Survey of India for the year 1919 G H. Tipper, M.A., F.G.S., F.A.S.B., Geological Survey of India Note on Pseudo-Crystals of Graphite from Travancore (with plate 1) G H. Tipper, M.A., F.G.S., F.A.S.B., Geological Survey of India. On a mineral related to Xenotime from the Manbhum District, Bihar and Orissa Province (with plate 2). K A Knight Hallowes, M.A., F.G.S., A.R.S.M., Geological Survey of India On the Coal Seams of the Foot-Hills of the Arakan Yoma, between Leppan Yaw in Pakokku and Ngape in Minbu, Upper Burma (with plate 3) N. Annandale, D.Sc., F.A.S.B., Zoological Survey of India Observations on "Physa-Prinsepi" Sowerby and on a chonid Sponge that Burrowed in its Shell (with plates 4 and 5). Re. 1.

Volume LI, Part 2 By E. Vredenburg Geological Survey of India Classification of the recent and fossil Cypracidæ. E H. Pascoe, M.A. (Cantab.), D.Sc. (Lond.), F.G.S., Officiating Director, Geological Survey of India Sulphur near the confluence of the Greater Zab with the Tigris, Mesopotamia (with plate 6). Miscellaneous Notes —H. C Jones, (1) Note on Monazite in the Southern Shan States H. C. Jones, (2) Note on an occurrence of Graphites in the Southern Shan States Murray Stuart, (3) The growth of an efflorescence of circum Sulphate on Travancore Graphite (with plate 7) Re 1 only.

Volume LI, Part 3. By E H. Pascoe, D.Sc., M.A., F.G.S., Offg. Director, Geological Survey of India. The Mineral Production of India during 1919 E Vredenburg, Superintendent Geological Survey of India Results of a Revision of some portions of Dr Noetling's Second Monograph of the Tertiary Faunas of Burma (with one text figure) E. Vredenburg, Superintendent, Geological Survey of India Note on the Marine Fossils collected by Mr. Pinfold in the Garo Hills Re 1.

Volume LI, Part 4 By E Vredenburg, Superintendent, Geological Survey of India Illustrated Comparative Diagnosis of Fossil Terebridæ from Burma (with plate 10) By N Annandale, D.Sc., F.A.S.B., Zoological Survey of India. Indian Fossil Viviparæ (with plate 11) By B Prasad, D.Sc., Zoological Survey of India On a new fossil Unionid from the Intertrappean Beds of Peninsular India (with plate 12, figures 1-2). By E. Vredenburg, Geological Survey of India, and B Prasad, D.Sc., Zoological Survey of India. Unionidæ from the Miocene of Burma (with plate 12, figures 3—13). Index. Re 1.

Volume LII. Director and Senior Officers of the Geological Survey of India. Quinquennial Review of the Mineral Production of India for the year 1914 to 1918. Rs 2.

Volume LIII. Part 1 By E H. Pascoe, M.A., D.Sc., F.G.S., Officiating Director, Geological Survey, of India. General Report of the Geological Survey of India for the year 1920 By A. M. Heron, D.Sc., F.G.S., Assoc Inst. C.E., Officiating Superintendent, Geological Survey of India The Antimony Deposits of Thabyu, Amherst District, Burma (with plates 1 and 2) By H Cecil Jones, A.R.S.M., A.R.S.C., F.G.S., Officiating Superintendent, Geological Survey of India Note on some Antimony Deposits of the Southern Shan States (with plate 3) By G H. Tipper, M.A., F.G.S., Superintendent Geological Survey of India. The Geology and Mineral Resources of Eastern Persia (with plates 4—11). A M Heron. Miscellaneous Notes—Bismuth in Tenasserim. Re. 1

Volume LIII, Part 2. Comparative Diagnoses of Pleurotomidæ from the Tertiary Formations of Burma. By E. Vredenburg, Superintendent, Geological Survey of India (with plates 12 to 14). Comparative Diognoses of Conidæ and Cancellariidæ from the Tertiary Formations of Burma. By E Vredenburg, Superintendent, Geological Survey of India (with plate 15) On the Stratigraphy, Fossils and Geological Relationships of the Lameta Bed of Jubbulpore. By C A. Matley, D.Sc., F.G.S (with plates 16 to 18) The Rocks near Lameta Ghat (Jubbulpore District). By C A. Matley, D.Sc., F.G.S

Volume LIII, Part 3. Obituary Notice Fredrick Richmond Mallet, F.G.S. Born 10th February 1841. Died 24th June 1921 By Dr. E. H. Pascoe. The Mineral Production of India during 1920. By Dr. E. H. Pascoe, D.Sc., M.A., F.G.S., Director, Geological Survey of India The Mineral Resources of Bihar and Orissa. By Dr. L. Leigh Fermor, O.B.E., D.Sc., A.R.S.M., F.A.S.B., F.G.S., Officiating Director, Geological Survey of India

Volume LIII, Part 4. Note on the Stratigraphy of the Singu-Yenangyat Area (with plates 20 and 21) By Rao Bahadur S. Sethu Rama Rau, B.A., Assistant Superintendent, Geological Survey of India Analysis of the Singu Fauna founded on Rao Bahadur S. Sethu Rama Rau's collections (with plate 22) By E. Vredenburg, Superintendent, Geological Survey of India The Sulphur Deposits of southern Persia (with plates 23 and 24). By Guy E. Pilgrim, D.Sc., F.G.S., Superintendent, Geological Survey of India. A Zone-Fossil from Burma: Ampullina (Megatylotus) Birminica (with plates 25 to 28). Index. By E. Vredenburg, B.Sc., F.G.S., Superintendent, Geological Survey of India.

**Records of the Geological Survey of India—contd.**

Volume LIV, Part I. General Report of the Geological Survey of India for the year 1921. By L. L. Fermor, O.B.E., A.R.S.M., D.Sc., F.G.S., F.A.S.B., M.I.M.M., Officiating Director. Contributions to the Geology of the Province of Yunnan in Western China—Traverses between Tali Fu and Yunnan Fu (with plate 1). By J. Coggin Brown, O.B.E., D.Sc., F.G.S., M.I.M.M., Superintendent, Geological Survey of India. The Geology of the Takki Zam Valley and the Kamguram Makin area, Waziristan (with plate 2) By Captain Murray Stuart, D.Sc., F.G.S. A note on the Geology of Thayetmyo and neighbourhood including Padaukbin with a map by late H. S. Bion, B.Sc., F.G.S., Assistant Superintendent, Geological Survey of India (with plate 3). By G. De P. Cotter, B.A., Sc. D. (Dub.), F.G.S., Superintendent, Geological Survey of India. The Occurrence of Bitumen in Bombay Island (with plates 1 and 5). By C. S. Fox, D.Sc., M.I.M.M., F.G.S., Assistant Superintendent, Geological Survey of India. Rs. 2-12.

Volume LIV, Part 2 The Mineral Production of India during 1922. By L. Leigh Fermor, O.B.E., D.Sc., A.R.S.M., F.G.S., M.I.M.M., Officiating Director, Geological Survey of India. The Iron-ores of Singhbhum and Orissa (with plate 6) By H. Cecil Jones, A.R.S.M., A.R.C.S., F.G.S., Officiating Superintendent, Geological Survey of India Geological Results of the Mount Everest Reconnaissance Expedition (with plates 7-13). By A. M. Heron, D.Sc., F.G.S., Officiating Superintendent, Geological Survey of India. The Northern Extension of the Wolfram-bearing Zone in Burma By J. Coggin Brown, O.B.E., D.Sc. M.I.M.M., F.G.S., Officiating Superintendent, Geological Survey of India. Miscellaneous Note:—Barytes in Alwar. By S. K. Roy, State Geologist, Alwar. Rs. 2-12.

**LIST OF BOOKS PUBLISHED BY THE METEOROLOGICAL DEPARTMENT DURING THE LAST EIGHT MONTHS ENDING ON 31ST DECEMBER 1921 AND DURING MARCH 1922.**

**Memoirs of the Indian Meteorological Department—**

Volume XXII, Part IV, on winds at ground level and above at nine stations in India. By J. H. Field, M.A., Director, Agra Observatory (illustrated by 15 plates). Quarto. Paper cover. Rs 2.

Volume XXII, Part V, on cloud observations made in India between 1887 and 1914. By W. A. Harwood, Assistant Director, Aerological Observatory Agra (illustrated by 24 plates) Quarto Paper cover. Re. 1.

Volume XXII, Part VI, on dust raising winds and descending currents by Dr. E. H. Hankin, Agra (illustrated by 2 plates). Quarto. Paper cover. As. 8.

Volume XXII, Part VII, "on dust raising winds" by Dr. C. W. B. Normand, M.A., Imperial Meterologist, pages 575 to 581. As 8.

Volume XXIII, Part I, on "Wet bulb temperatures and the thermodynamics of the Air" by Dr C. W. B. Normand, M.A., Imperial Meteorologist, pages 1 to 21, with plates I and II. Re 1.

Volume XXIII, Part II, on "Correlation in Seasonal Variations of Weather, VII. The local distribution of monsoon rainfall" by Dr Gilbert T. Walker, C.S.I., Sc.D., Ph.D., F.R.S., Director-General of Observatories, pages 23 to 39, with plates 1 to 3. Re 1.

---

**NOTICE.**

Advertisements, Notices, etc., intended for insertion in this Part of the Gazette cannot be received after noon on Saturday.

# The Calcutta Gazette

WEDNESDAY, JULY 18, 1923.


## PART III.

### *Acts of the Bengal Legislative Council.*

**GOVERNMENT OF BENGAL.**

**LEGISLATIVE DEPARTMENT.**

NOTIFICATION

*No. 1678L., dated the 10th July, 1923.*—In pursuance of the provisions of sub section (3) of section 81 of the Government of India Act, the following Act of the Local Legislature of Bengal having been assented to by the Governor General on the 3rd July, 1923, is hereby published for general information.—

# BENGAL ACT III OF 1923.

## THE CALCUTTA MUNICIPAL ACT, 1923.

SUMMARY OF CONTENTS.

PREAMBLE.

PART I

SECTIONS

Chapter I.—Preliminary ... 1-4

PART II.—CONSTITUTION AND GOVERNMENT

Chapter II.—The Corporation .. . 5-19

" III.—Election and appointment of Councillors and Aldermen ... 20-50

" IV.—Municipal officers and servants 51-57

" V.—Conduct of business ... 58-79

PART III.—FINANCE

Chapter VI.—The Municipal Fund ... 80-92

" VII.—Budget Estimate ... 93-96

" VIII.—Loans .. . .. 97-119

" IX.—Accounts ... ... 120-123

PART IV.—TAXATION.

Chapter X.—The consolidated rate ... 124-164

" XI.—Tax on carriages and animals ... 165-174

" XII.—Tax on professions, trades and callings ... ... 175-178

" XIII.—Scavenging tax ... ... 179, 180

" XIV.—Tax on petroleum ... 181, 182

" XV.—Tax on carts ... ... 183-187

" XVI.—Recovery of the consolidated rate and other taxes ... 188-213

## PART V.—THE PUBLIC HEALTH, SAFETY AND CONVENIENCE.


| | SECTIONS |
|---|---|
| Chapter XVII.—Water-supply ... ... | 214-247 |
| „ XVIII.—Drains, privies and other receptacles for filth ... | 248-287 |
| Chapter XIX.—Licensed plumbers ... | 288-294 |
| „ XX.—Streets and public places ... | 295-318 |
| „ XXI.—Buildings . ... | 319-334 |
| „ XXII.—Bustees ... ... | 335-362 |
| „ XXIII.—Demolition, alteration and stopping of unlawful work | 363-365 |
| „ XXIV.—Lighting and scavenging, and regulation of public bathing and washing ... | 366-377 |
| „ XXV.—Municipal railways ... | 378, 379 |
| „ XXVI.—Inspection and regulation of premises, and of factories, trades and places of public resort ... | 380-391 |
| „ XXVII.—Markets, *bazars* and slaughter-places ... | 392-404 |
| „ XXVIII.—Food and drugs ... | 405-426 |
| „ XXIX.—Milk-supply ... ... | 427-434 |
| „ XXX.—Restraint of infection ... | 435-447 |
| „ XXXI.—Registration of births and deaths, and disposal of the dead ... ... | 448-462 |
| „ XXXII.—Census ... ... | 463-467 |


## PART VI.


| | |
|---|---|
| Chapter XXXIII.—Acquisition, disposal and general improvement of land and buildings ... | 468-476 |
| Chapter XXXIV.—Special powers to the Corporation ... | 477 |


## PART VII.


| | |
|---|---|
| Chapter XXXV.—By-laws and rules ... | 478-487 |

SECTIONS

PART VIII.

Chapter XXXVI.—Penalties ... ... 488-497

PART IX.

Chapter XXXVII.—Procedure .. ... 498-539

PART X.

Chapter XXXVIII.—Supplemental Provisions 540-558

SCHEDULES.

# THE CALCUTTA MUNICIPAL ACT, 1923.

## CONTENTS.

PREAMBLE.

**PART I.**

CHAPTER I.

PRELIMINARY.

SECTION.

1. Short title, extent and commencement.
2. Repeal of enactments and savings.
3. Definitions.
4. Power to Corporation to decide whether area is a *bustee* or not.

**PART II.**

**CONSTITUTION AND GOVERNMENT.**

CHAPTER II.

THE CORPORATION.

*Constitution.*

5. Constitution and incorporation of the Corporation.
6. Property vested in the Corporation.
7. Transfer of liabilities.
8. Constituencies.
9. Election of Aldermen.
10. Annual election of Mayor and Deputy Mayor.

*Powers, duties and functions of the Corporation*

11. Annual administration report and statement of accounts by the Corporation.
12. Delegation of Corporation's functions.
13. Exercise of functions to be subject to sanction of the necessary expenditure.

*Control by the Local Government.*

14. Sanction of Local Government required to projects costing two and a half lakhs or over.
15. Power to Local Government to require returns, etc.
16. Power to Local Government to depute officers to make inspection or examination and report.
17. Power to Local Government to require Corporation to take action.

SECTION.

18. Procedure by Local Government where Corporation fail to take action.
19. Power of Local Government to annul illegal proceedings of Corporation.

## CHAPTER III.

### ELECTION AND APPOINTMENT OF COUNCILLORS AND ALDERMEN.

*Qualifications of Electors, Councillors and Aldermen*

20 Qualifications of electors.
21 Elections in area added to Calcutta before the second general election.
22. General disqualifications for being a Councillor or Alderman.
23 Qualification for election as Councillor

*The electoral roll*

24 General conditions of registration and disqualifications.
25. Electoral roll.
26. Right to vote.

*Elections.*

27. Nomination of candidates.
28 Uncontested elections.
29. Procedure at election.
30. Local Government to make rules regarding the conduct of election.
31. Multiple elections.
32. Disqualification for being election agent.
33 Revocation of appointment of election agent
34. Return of election expenses.
35. Accounts of agents.
36. Appointment by Local Government to make up the prescribed number.
37. Appointment of Councillors when to be made.
38. Oath of allegiance to be taken by Councillors and Aldermen.
39 Term of office of Councillors and Aldermen.
40. Resignation of Councillors or Aldermen.
41. Effect of subsequent disabilities.
42. Removal of Councillor or Alderman.
43. Casual vacancies
44. Power of Local Government in respect of first election.
45. General elections.

*Disputes as to the validity of an election.*

46. Hearing of election petitions by High Court.
47. Grounds for declaring election void.
48. Operation of transitory provisions.

SECTION.

49. Transitory provisions to have effect at elections prior to the fourth General election.

50. Temporary substitution of Schedule IV for Schedule III.

CHAPTER IV.

MUNICIPAL OFFICERS AND SERVANTS.

51. Appointment and salary of principal officers.

52. Power of the Executive Officer.

53. Prohibition of having share or interest in contract or employment with Corporation.

54. Indebtedness to disqualify for office under section 51.

55. Contribution in respect of pension or leave allowances of Government servants appointed to be municipal officers or servants.

56. Power to Corporation to make rules as to furnishing security and grant of leave of absence, and allowances.

57. Grant of pensions, gratuities and compassionate allowances.

CHAPTER V.

CONDUCT OF BUSINESS.

*Transaction of business by the Corporation.*

58. Meetings.

59. First meeting after general election.

60. Notice of meetings and business.

61. Vote of majority decisive.

62. President at meeting.

63. Quorum.

64. Declaration by President that a resolution has been carried or lost.

65. Poll and ballot.

66. Power to Corporation to make rules.

*Contracts and Seal of Corporation.*

67. Execution of contracts by the Mayor or Deputy Mayor on behalf of the Corporation.

68. Further provisions as to execution of contracts and provisions as to seal of Corporation.

69. Tenders.

SECTION.

70. Security for performance of contract.

*Standing Committees.*

71. Standing Committees.
72. District Standing Committees.
73. Primary Education Standing Committee.
74. Sub-Committees of Standing Committees

*Special Committees.*

75. Special Committees.

*Minutes and reports of proceedings.*

76. Keeping of minutes of proceedings.
77. Inspection of minutes and reports of proceedings.
78. Forwarding of minutes and reports of proceedings to Local Government.

*Supplemental provisions.*

79. Validation of acts and proceedings.

## PART III.

### FINANCE.

### CHAPTER VI.

### THE MUNICIPAL FUND.

80. Municipal Fund to be sole and to be held in trust.
81. Credit of moneys to Municipal Fund.
82. Receipt of moneys and deposit in bank.
83. Drafts on the Municipal Fund.
84. Application of Municipal Fund.
85. Payments not to be made out of Municipal Fund unless covered by a budget-grant and balance is available.
86. Duty of person signing cheque.
87. Procedure when money not covered by a budget-grant is expended under clauses (*c*), (*e*), (*f*) or (*g*) of section 85.
88. Temporary payments from the Municipal Fund for works urgently required for the public service.
89. Compensation to the Tollygunge and South Suburban Municipalities.
90. Special payments on improvements of the area which formed the Maniktala, Cosipur-Chitpur, and Garden Reach Municipalities.
91. Expenditure on primary education.
92. Investment of surplus money.

## CHAPTER VII.

### BUDGET ESTIMATE.

SECTION.

93. Executive Officer to lay before Corporation annual estimates of expenditure, receipts and balances and statement of proposed taxes.

94. Corporation to frame Budget Estimate.

95. Power to Corporation to alter budget-grants.

96. Power to Corporation to re-adjust income and expenditure during the year.

---

## CHAPTER VIII.

### LOANS.

97. Power to Corporation to borrow money.

98. Determination of sums to be borrowed.

99 Power of Corporation to open credit account with a bank.

100 Limit to borrowing powers.

101. Form, exchange, transfer and effect of debentures.

102. Signature of coupons attached to debentures.

103. Payment to survivors of joint payees.

104 Receipt by joint holder for interest or dividend.

105. Repayment of loans.

106. Establishment and maintenance of Sinking Funds for such loans.

107 Power to discontinue payments into Sinking Fund.

108. Provisions regarding loans raised between the 1st April, 1881, and the commencement of the Calcutta Municipal (Loans) Act, 1914.

109. Method of disposal of securities transferred to Corporation under Ben. Act IV of 1914.

110. Power to Corporation to consolidate their loans.

111. Time for repayment of money borrowed to extinguish previous loan.

112. Investment of Sinking Funds.

113. Power to Corporation to reserve a portion of loan-debentures for investment of Sinking Funds.

114. Application of Sinking Funds.

115. Annual statement by Executive Officer.

SECTION.

116. Priority of payments for interest and repayment of loans over other payments.

117. Annual examination of Sinking Funds.

118. Attachment of Municipal Fund for recovery of money borrowed from the Government.

119. Attachment of Municipal Fund for securing payment into Sinking Fund.

CHAPTER IX.

ACCOUNTS.

120. Accounts to be kept.

121. Appointment and powers of municipal auditors.

122. Reports and information to be furnished by auditors.

123. Corporation to report to Local Government action on defects.

PART IV.

TAXATION.

CHAPTER X.

THE CONSOLIDATED RATE

*Imposition of consolidated rate.*

124. Power to Corporation to impose consolidated rate

125. Amount of consolidated rate how to be fixed.

*Exemptions.*

126. Exemptions from consolidated rate.

*Assessment of lands and buildings to the consolidated rate.*

127. Annual value of land or building, how to be ascertained.

128. Annual value of land or building belonging to the Calcutta Improvement Trust.

129. No remission for vacancy in the case of land or building belonging to the Board.

130. Revaluation of land or building vested in the Board after execution of an improvement scheme.

131. Assessment of annual value, and duration of assessment.

132. Separate valuation of land and huts in case of a *bustee*

SECTION.

133. Assessment in case of land or building subdivided into separate shares.

134. Assessment in case of amalgamation of premises.

135. Power to Executive Officer separately to assess out-houses and portions of buildings.

136. Returns and inspection for purpose of valuation.

137. Public notice and inspection of valuations.

138. Notice when valuation made for the first time or increased.

139. Notice of objection to valuation.

140. Entry of objection and investigation thereof by Executive Officer or Deputy Executive Officer.

141. Appeal to Small Cause Court.

142. Valuations when to be final.

143. Keeping of municipal assessment-book.

144. Entry of names of owners and occupiers in assessment-book.

145. Notice of transfers of title when to be given.

146 Power to Executive Officer to amend assessment-book.

147. Period for which revised valuations to continue in force.

148. Effect of entries in assessment-book.

*Payment and recovery of the consolidated rate.*

149. Payment of consolidated rate.

150. Recovery by owner from tenant in certain cases of part of the owner's share of the consolidated rate.

151. Refund of owner's share of consolidated rate for period of vacancy.

152. Refund of occupier's share of consolidated rate.

153. Notice under section 151 or section 152 when to be delivered.

154. Application for refund, when to be made.

155. Notice of re-occupation when to be given.

156. Rate payable from date of re-occupation.

157. Power of Executive Officer to levy entire rate from owner in certain cases.

158. Recovery from occupier of portion of rate paid by owner under section 157.

SECTION.

159. Consolidated rate to be paid by owner of a *bustee*.

160. Consolidated rate not payable on new or enlarged huts in a *bustee*.

161. Power to Corporation to except *bustee* from section 159.

162. Requisition for name of owner.

163. Occupier liable to owner's rate on failure to furnish owner's name and address.

164. Payment of consolidated rate, how affected by objections to valuation.

## CHAPTER XI.

### TAX ON CARRIAGES AND ANIMALS.

*Carriages and animals specified in Schedule VIII*

165. Tax on carriages and animals as specified in Schedule VIII.

166 Tax, when payable.

167. Obligation to furnish statements, and payment and remission of tax.

168. Power to Corporation to require occupier to furnish statements.

169. Grant of license on payment of tax.

170. Power to Corporation to compound with livery stable-keepers, etc., for tax.

171. Power to Corporation to require production of books and accounts by livery stable-keeper.

172. Power to Corporation to inspect any premises in pursuance of provisions of this chapter, and to seize and dispose of carriages and animals.

*Dogs.*

173. Tax on dogs.

174. License and number-ticket for, and disposal of, dogs.

## CHAPTER XII.

### TAX ON PROFESSIONS, TRADES AND CALLINGS.

175. Licenses to be taken out annually.

176. Grant and contents of licenses.

SECTION.

177. Liability and class how to be determined.

178. Power to Corporation to require list of persons.

CHAPTER XIII

SCAVENGING TAX.

179. License to be taken out half-yearly, and fee to be paid therefor.

180. Grant and contents of licenses.

CHAPTER XIV.

TAX ON PETROLEUM.

181. Control by Corporation of storage and taxation of petroleum.

182. Confiscation of petroleum.

CHAPTER XV.

TAX ON CARTS.

183. Registration and numbering of carts.

184. Fees for registration of carts.

185. Division of proceeds of registration fees, etc.

186. Seizure and sale of unregistered carts and application of proceeds of sale.

187. No person to drive cart without a registration ticket.

CHAPTER XVI.

RECOVERY OF THE CONSOLIDATED RATE AND OTHER TAXES.

188. Saving of other chapters.

*The consolidated rate.*

189. Presentation of bills.

190. Notice of demand

191. Distraint in Calcutta.

192. Power to Corporation to remit certain fees.

193. Power to officer to break open door or window.

194. Officer executing warrant to make inventory and notice of sale.

195. Power to said officer to take away property if forcible removal apprehended.

SECTION.

196. Distresses to be proportionate to sum distrained for.

197. Sale and disposal of proceeds.

198. Power to Corporation to issue fresh warrant when sale-proceeds insufficient.

199. Recovery of owner's share of rate from occupier, or his sub-tenants, and deduction of amount from rent.

200. Liability of purchaser for vendor's share of consolidated rate.

201. Execution of distress warrant outside Calcutta.

202. Distraint not unlawful for want of form.

203. Power to Corporation to take summary proceedings against persons about to leave Calcutta.

204. Power to Corporation to sue for arrears.

205. The consolidated rate to be a first charge on premises

*Other taxes.*

206. Power to Corporation to prosecute or serve notice of demand.

207. Election by defaulter to pay or to appear before Magistrate or Corporation.

208. Procedure by Corporation after election by defaulter under section 207.

209. Power to Corporation to increase penalty where defaulter does not appear before Magistrate or Corporation.

210. Distraint.

211. Power to Corporation to seize hawker's goods.

*Supplemental provisions.*

212. Taxes not invalid for defect of form.

213. Cancellation of irrecoverable dues.

## PART V.

### THE PUBLIC HEALTH, SAFETY AND CONVENIENCE.

## CHAPTER XVII.

### WATER-SUPPLY.

*Proprietary rights of the Corporation.*

214. Public water-works, etc., vested in the Corporation.

*General duties of the Corporation in respect of the supply of water.*

SECTION.

215. Corporation to provide supply of filtered and unfiltered water.
216. Bathing platforms and public stand-posts.
217. Hydrants, etc., for street-watering, etc.
218. Pressure of supply.
219. Testing of purity of filtered water.

*Use of water.*

220 Use of filtered water.
221. Use of unfiltered water.
222. Supply of filtered water for purposes other than domestic purposes.

*Private supply of water to premises.*

223. Right of occupier of connected premises to receive water in consideration of payment of the consolidated rate.
224 Power to Corporation to allow occupier of premises to lay down service pipes.
225. Requisition by occupier of masonry building or owner to provide works for supply of water.
226. Provision or completion of works by occupier in default of owner, and deduction of expenses from rent.
227 Arbitration in case of difference between owner and occupier.
228 Power to Corporation to direct owner to obtain sufficient supply of water from nearest main.
229. Water-supply not to be directly connected to huts.
230 Power to Corporation to sell water for other than domestic purposes.

*Supply of water to ships.*

231 Supply of filtered water to ships.

*Private connections of premises to the water-supply and maintenance thereof.*

232. Rules as to private connections to premises.
233. Owner to keep works in repairs.
234. Power to Corporation to take charge of private connections.

*Regulation of consumption of water, and provision of meters.*

235. Power of Corporation to establish bulk meters for the supply of filtered water.

SECTION.

236. Prevention of waste of filtered water in premises.

237. Power to Corporation to provide water-meters.

238. Payment by occupier for filtered water supplied in excess of statutory allowance.

239. Presumption as to correctness of meter.

240. Rules as to meters

241. Occupier of premises to be primarily liable for certain offences relating to water-supply.

*Supply of water for use beyond Calcutta.*

242. Supply of filtered water to adjacent municipalities and cantonments.

243. Supply of water to persons residing out of Calcutta or for use without Calcutta

*Supplemental provisions.*

244. General powers of the Corporation in regard to water-mains.

245. Power to Corporation to cut off or turn off supply of water to premises

246. Filling up wells when water supplied

217. Laying of pipes or construction of aqueducts beyond Calcutta for bringing water into Calcutta.

---

## CHAPTER XVIII

### DRAINS, PRIVIES AND OTHER RECEPTACLES FOR FILTH.

*Proprietary rights of the Corporation in respect of drains.*

248. Public drains, and drains in, alongside or under public streets, to vest in Corporation.

249. Drains, etc., constructed, etc., at charge of Municipal Fund on private premises to vest in Corporation.

*Duties of the Corporation in respect of maintenance and construction of drains.*

250. Repair and provision of municipal drains by Corporation.

251. Provision by Corporation for outfall for discharge of storm-water and sewage.

*Municipal drains.*

SECTION.

252. Power to Corporation to improve, discontinue, etc., municipal drains, etc.
253. Private streets, etc., not to be constructed over municipal drain without permission
254. Communication of drain under control of local authority beyond Calcutta with municipal drain.
255. Communication of municipal drains with drains, lakes, etc., beyond Calcutta.

*Drainage of premises.*

256 Right of owner or occupier of premises to empty his house-drain into municipal drain.
257. Connections with municipal drains not to be made except in conformity with section 256.
258. Compulsory connection of house-drains with each other.
259. Power to Corporation to drain group or block of premises by a combined operation.
260. Power to Corporation to enforce drainage of undrained premises situate within one hundred feet of a municipal drain.
261. Power to Corporation to enforce drainage of undrained premises in other cases.
262. Power to Corporation to close or limit the use of house-drain in certain cases.
263. Power to Corporation to require that sewage and rain-water drains be distinct in any premises.
264. Power to Corporation to require paving, maintaining and raising level of court-yard, etc.
265. Drains for huts.
266. Rules as to drains.

*Privies, urinals and bathing and washing places.*

267. Power to Corporation to provide and maintain public privies and urinals.
268. Power to Corporation to license public privies and urinals.
269. Privy and urinal accommodation to be provided in new buildings.
270. Privy, urinal and other accommodation for premises for twenty or more labourers or workmen.
271. Provision for privy and urinal accommodation in premises where accommodation is not provided or is insufficient.

SECTION.

272. Power to Corporation to require provision of privies and urinals for premises used as a market, etc.

273. Rules for construction, etc., of privies and urinals.

274. Cost of repair of privy payable out of Municipal Fund in certain cases.

*Inspection of drains, house-gullies, privies, urinals and bathing and washing places.*

275. House-drains, etc., not belonging to the Corporation to be subject to inspection and examination.

276. Power to Corporation to open ground, etc., for purposes of such inspection and examination.

277 Expenses of inspection and examination by whom to be paid.

278. Power to Corporation to require repairs, etc., to be made.

*Position of cesspools and other filth receptacles*

279. Position of cesspools

280 No filth receptacle to be situated within fifty feet of tank, well, water-course or reservoir.

*General powers and duties of the Corporation.*

281. Power to Corporation to affix shafts or pipes for ventilation of drain or cesspool.

282. Power to Corporation to execute work when municipal drains, etc., affected.

283. Power to Corporation to provide new drains, etc, in executing works.

284. General power to Corporation in respect of house-drains, cesspools, privies and urinals.

285. Power to Corporation to require occupier to carry out work in place of owner.

286 Power to Corporation to execute work after giving person liable notice.

*General prohibitions.*

287. Prohibition of certain acts.

## CHAPTER XIX.

### LICENSED PLUMBERS.

288. Power to Corporation to license plumbers.

SECTION.

289. Rules for guidance of plumbers.

290. Powers and duties of plumber licensed for drainage works.

291. Prohibition of work by other than licensed plumber.

292. Power to Corporation to prescribe remuneration of licensed plumbers.

293. Control over licensed plumbers and their work and charges.

294. Prohibitions and suspension or cancellation of license.

## CHAPTER XX

### STREETS AND PUBLIC PLACES.

*Proprietary Rights of the Corporation.*

295. Public streets and squares vested in the Corporation and power to the Corporation to name such streets and squares.

*Maintenance, repair, protection and regulation of streets and public places.*

296 Maintenance and repair of public streets by Corporation.

297. Watering, etc., of public streets, squares and gardens.

298. Rules for maintaining, repairing, etc., streets and public places.

299. Power to Corporation to remove or alter verandah, etc., or fixtures attached to building which project, etc., over public street or land.

300 Power to Corporation to cause wall to be removed or to remove other obstructions in public street.

*Execution of works in streets.*

301. Provision of facilities, and payment of compensation, when work executed by Corporation in public street

*Building-lines and street alignments for public streets.*

302. Power to Corporation to prescribe building-line and street alignment.

303. Restrictions on erection of, or addition to, buildings or boundary walls within street alignment or building-line.

304. Power to Corporation to take possession of, and add to street, land situated within prescribed street alignment or covered by projecting buildings.

305. Power to Corporation to set buildings forward

*Opening, improvement and closing of public streets, squares and gardens.*

SECTION.

306 Power to Corporation to make, improve and close streets, squares and gardens.

307. Power to Corporation to dispose of a permanently-closed street, square or garden

*Projected public streets.*

308. Projected public streets

309. Provisions of sections 302 and 303 to apply to projected public streets.

*Acquisition of land and buildings.*

310. Power to Corporation to acquire land and buildings for improvement of public streets, squares and gardens

*Abandonment of Acquisition*

311 Abandonment of acquisition in consideration of special payment.

312 Recovery of money payable in pursuance of section 311.

313 Agreement or payment under section 311 not to bar acquisition under a fresh declaration

*Special provisions as to private streets*

314. Making of new private streets.

315 Prohibition of breach of section 314.

316. Alteration or demolition of street made in breach of section 314

317 Levelling, etc., of private streets.

318 Power to Corporation to take over private streets

---

## CHAPTER XXI

### BUILDINGS.

319. Use of building-sites, and erection of new buildings.

320 Corporation to determine site of proposed masonry building.

*Licensed building surveyors.*

321. Licensing of building surveyors.

322. Rules for guidance of licensed building surveyors.

323. Power to Corporation to decline plans, etc., made by persons other than licensed building surveyors.

*Buildings generally.*

SECTION.

324. Power to Corporation to regulate future erection of certain classes of buildings in particular streets or localities.

325. Masonry building not to be erected without special permission in certain cases.

326. Power to Corporation to require alteration of existing public building.

327. External doors of public buildings.

328. Prohibition of change in user of a building.

329. In case of dispute Corporation to decide what is to be deemed a substantial part of a building.

*Application of Act to alterations of, and additions to, buildings.*

330. Application of Act to alterations of, and additions to, buildings.

331. Power to relax provisions of chapter and Schedule XVII.

332 Erection of, or addition to, boundary wall affecting an easement

*Exemptions*

333. Exemptions

334 Erection and use of temporary building to be approved by Corporation

## CHAPTER XXII

### BUSTEES.

*Preliminary.*

335. Power to Corporation to define and alter limits of *bustees*.

336 Restriction on application of this chapter to certain *bustees* or to masonry buildings in *bustees*.

*Improvement of bustees.*

337 Power to Corporation to require owner of *bustee* of area between ten cottahs and two bighas to carry out certain improvements.

338 Power to Corporation to require preparation of standard plan by owner of *bustees*.

339 Preparation of standard plan by Corporation where owners disagree, etc.

340. Suspension of building pending preparation of standard plan.

341. Prohibition of building contrary to standard plan.

342. Power to Corporation to require removal of hut not in conformity with standard plan.

343. Power to Corporation to require carrying out of other improvements in conformity with standard plan.

SECTION.

344. Inspection report and preparation of standard plan by registered medical practitioner and engineer, in cases requiring expedition

345. Approval by Corporation of standard plan and schedules annexed to such report

346 Power to Corporation to require owners or occupiers to carry out improvements specified in Schedule A.

347. Payment of expenses incurred in carrying out improvements.

348 Disposal by the Corporation of materials of huts pulled down.

349. Power to Corporation to purchase or acquire masonry buildings or land in *bustee*

350 Application of sections 341 to 343 to *bustee* for which standard plan has been approved under section 345

351 Alternative power to Corporation to make standard plan, to purchase or acquire *bustee*, and to carry out improvements themselves or through purchaser or lessee.

352 Proportions of area of *bustee* to be shown in standard plan as streets, passages and open lands

353 Regulation of plots by standard plan, and compensation for adjustment of plots

354 Streets and passages shown in standard plan if not public streets, to remain private

355. Bathing arrangements and privy accommodation in *bustee*, as shown in standard plan, to be kept open for use of tenants

356. Owner of land in *bustee* to maintain certain conveniences on his land.

357 Rights of land-owner and hut-owner, respectively, over streets, land and drains shown in standard plan.

358. *Bustee* when to be deemed a remodelled *bustee*.

359 Power to owner to take land out of the category of *bustee* in certain cases

*Bustee streets.*

360 Power to Corporation to prescribe alignments for *bustee* streets.

361. Power to Corporation to require removal of existing huts within street or hut alignment in *bustee*.

362. Power to Corporation to require space to be kept between masonry building in *bustee* and centre line of *bustee* street.

## CHAPTER XXIII.

### DEMOLITION, ALTERATION AND STOPPING OF UNLAWFUL WORK.

SECTION.

363. Demolition or alteration of building work unlawfully commenced, carried on or completed.

364. Demolition or alteration of work in other cases

365. Power to Corporation to stop progress of building work unlawfully commenced or carried on.

## CHAPTER XXIV

### LIGHTING AND SCAVENGING, AND REGULATION OF PUBLIC BATHING AND WASHING.

*Lighting.*

366 Provision for lighting of public streets squares, gardens, markets and buildings

367 Provision for lighting of private street by Corporation on application of owner

368 Streets, etc., not to be constructed over municipal gas-pipe without permission.

*Keeping of animals.*

369 Prohibition as to keeping animals.

370. Destruction of stray swine

*Scavenging.*

371. Provision or appointment of receptacles, depôts and places for deposit or disposal of rubbish, offensive matter, sewage and carcasses.

372. Collection and temporary deposit of rubbish and offensive matter by occupiers of premises

373. Collection and removal of rubbish and offensive matter accumulating in the course of business or building operations.

374. Establishment for removal of sewage, etc., and the scavenging of streets.

375. Presumption as to offender.

376. Notice to be given by *mehters*, etc., before withdrawing from work.

*Public bathing and washing.*

377. Construction of places for public bathing, etc.

## CHAPTER XXV.

### MUNICIPAL RAILWAYS.

378. Power to Corporation to construct, lease and otherwise deal with railways.

379. Certain powers to lessee of Corporation's railway.

## CHAPTER XXVI.

### INSPECTION AND REGULATION OF PREMISES, AND OF FACTORIES, TRADES AND PLACES OF PUBLIC RESORT.

SECTION.

*Premises generally.*

380. Inspection and regulation of premises.

381. Procedure in case of buildings deemed unfit for human habitation.

382 Power to Corporation to require demolition of, or execution of work on building unfit for human habitation.

383. Power to Corporation to call for statement of accommodation

384 Abatement of overcrowding in dwelling-house or dwelling-place

*Factories, trades and places of public resort*

385. Factory, etc., not to be newly established, etc, without permission of the Corporation.

386 Premises not to be used for certain purposes without a license

387 Power to Corporation to prevent use of premises in particular areas for purposes referred to in section 386.

388. Discontinuance of use of premises for particular purpose when kept so as to be a nuisance

389. Prohibition of fouling of water in carrying on trade or manufacture.

390 Eating-houses, etc., not to be used without license from Corporation.

391. Licensing and control of theatres, circuses and places of public amusement.

## CHAPTER XXVII.

### MARKETS, *BAZARS* AND SLAUGHTER-PLACES.

392. Power to Corporation to provide and maintain municipal markets, slaughter-houses and stock-yards.

393. Power to Corporation to close municipal markets, slaughter-houses and stock-yards.

394. Power to Corporation to license vendors in municipal markets.

395. Power to Corporation to permit opening of new private markets.

SECTION.

396. Power to Corporation to license private markets, slaughter-houses and stock-yards.

397. Power to Magistrate to close unauthorized private market.

398. Prohibition of use of market so closed.

399 Power to Corporation to require paving and draining of private markets, etc., and to alter structures in such markets.

400 Power to Corporation to define limits of market, and to require provision and maintenance of market approaches, etc.

401 Power to Corporation to levy charges, farm rents, etc., in municipal markets, etc.

402 By-laws and table of charges to be posted up in markets and slaughter-houses.

403. Power to Corporation to expel person contravening by-laws.

404 Depôts or shops for trading in food-stuffs, etc., in cases of emergency.

## CHAPTER XXVIII.

### FOOD AND DRUGS.

*Sale of food and drugs.*

405 Licensing of butchers and of sale of meat, etc., outside market.

406 Prohibition of sale, etc., of adulterated or misbranded food or drugs.

407. Prohibition of sale, etc., of certain articles which are not of the prescribed standard of purity.

408. Registration of manufactory.

409. Inspection of manufactories.

410. Prohibition of adulterants in places where butter, *ghee*, etc., are manufactured or stored.

411. Receptacles for separated or skimmed condensed milk to be marked.

412. Prohibition of sale of diseased animals or unwholesome articles intended for human food.

413. Licensing of shops and places for retail sale of drugs

414. Power to local Government to make rules as to compounders.

415. Prohibition in respect of compounding of drugs.

416. Saving as to practitioners of indigenous medicines.

*Inspection, seizure and destruction of food and drugs.*

SECTION.

417. Power to Health Officer to inspect place where unlawful slaughter of animals or sale of flesh is suspected.

418. Corporation to provide for inspection of animals, etc., exposed for sale.

419. Power to Health Officer to seize animals, etc, which are diseased, etc

420. Destruction of animals, etc., seized under section 419.

421 Taking before Magistrate animals, etc, seized under section 419

*Analysis of food and drugs.*

422 Power to local Government to declare normal constituents of any article of food or drug.

423 Power of purchaser to have article of food or drug analysed.

424 Compulsory sale to Health Officer for purpose of analysis.

425. Duty of public analyst to supply certificate of analysis

*Vesting of condemned food or drug in Corporation.*

426 Food and drugs directed to be destroyed, etc, to be property of Corporation

---

## CHAPTER XXIX

### MILK-SUPPLY.

427. Special powers to the Corporation.

428 Licensing of dairyman.

429. Corporation to be satisfied as to the sanitary condition of dairies before granting license under section 428.

430. Power to require dairymen to furnish list of sources of supply.

431. Inspection of dairies and prohibition of milk-supply.

432. Power to seize and send milch-cattle to veterinary hospital for treatment.

433 Licensees to notify infectious diseases existing among persons engaged in dairies.

434. Application of section 507 to an entry to inspect dairy.

## CHAPTER XXX.

### RESTRAINT OF INFECTION.

SECTION.

435. Medical practitioners to give information of existence of dangerous disease.

436. Power to Health Officer to inspect places and take measures to prevent spread of dangerous disease.

437. Prohibition of use, for drinking or for other domestic purpose, of water likely to cause dangerous disease.

438. Power to Health Officer to remove patient to hospital in certain cases.

439. Power to Health Officer to disinfect building, tank, pool or well.

440. Power to Health Officer to destroy huts and sheds.

441. Infected building not to be let without being first disinfected.

442. Provision of places for disinfection, washing or destruction of infected articles and power to Health Officer to disinfect or destroy such articles.

443. Infected articles not to be transmitted, etc. without previous disinfection.

444. Restrictions on carriage of patient or dead body in public conveyance.

445. Disinfection of public conveyance after carriage of patient or dead body.

446 Power to Corporation to provide special conveyances for patient.

447. Power to Corporation to take special measures on outbreak of dangerous disease or infectious epizootic disease.

---

## CHAPTER XXXI.

### REGISTRATION OF BIRTHS AND DEATHS, AND DISPOSAL OF THE DEAD.

*Registration of births and deaths*

448. Appointment of registrars and sub-registrars and list of same.

449. Register-books.

450. Registrar to inform himself of, and register births and deaths.

451. Information of birth by whom to be given.

452. Information of death by whom to be given.

SECTION.

453. Medical practitioners to send to Heath Officer notice stating cause of death

454. Duties of police with regard to unclaimed corpses.

455. Sextons, etc., not to bury, etc., corpse without certificate

456 Power to local Government to make rules

*Disposal of the dead*

457. Registration of places for disposal of the dead.

458. Provision and registration of new places for disposal of the dead

459 Permission of the Corporation required for opening or re-opening places for disposal of the dead.

460 Power to local Government to direct the closing of any place for the disposal of the dead.

461 Power to local Government to direct re-opening of place closed under section 460 or other enactment

462. Prohibition of certain acts without the permission of the Executive Officer

CHAPTER XXXII.

CENSUS

463. Census when and how to be taken

464. Superintendence of enumeration

465. Expenses of enumeration

466. Appointment and duties of enumerators

467. Military and naval officers and certain other persons, if required, to act as enumerators.

## PART VI.

CHAPTER XXXIII

ACQUISITION, DISPOSAL AND GENERAL IMPROVEMENT OF LAND AND BUILDINGS.

*Acquisition and disposal of land and buildings.*

468. Power to Corporation to acquire land and buildings for improvements.

469. Scheme for carrying out such improvements.

470. Power to Corporation to carry out improvements.

471. Transfer of land and buildings to person for carrying out improvements.

*Additional powers for acquisition, disposal, etc.*

SECTION.

472. Further powers to Corporation for acquiring and disposing of land or buildings.

473. Procedure when Corporation lease or sale land acquired by them.

*Exemptions*

474. Exemption of places of public worship from acquisition

*General provisions*

475. Application of Land Acquisition Act, 1894, with amendment.

476. Vesting in Corporation of land and buildings acquired under the Land Acquisition Act, 1894.

CHAPTER XXXIV.

SPECIAL POWERS TO THE CORPORATION

477. Special powers to the Corporation.

**PART VII.**

CHAPTER XXXV

BY-LAWS AND RULES.

478 Power to Corporation to make by-laws.

479. Provisions as to the applications of certain by-laws.

480. Penalties for breach of by-laws.

481 Conditions precedent to the making of by-laws.

482. By-laws to be subject to sanction of local Government.

483. Power to local Government to make rules for the amendment of certain schedules.

484. Conditions precedent to the making of rules.

485 Certain rules to be subject to sanction.

486. Publication of by-laws, and rules in Gazette, and effect of such publication.

487. Power to local Government to cancel by-laws and rules.

**PART VIII.**

CHAPTER XXXVI

PENALTIES.

488. Certain offences punishable with fine

489. Certain offences punishable with increased fine or imprisonment, or both, for a second or subsequent conviction.

490. Punishment for contravening rule made under section 447.

SECTION.

491. Punishment for acquiring share or interest in contract, etc., with the Corporation.

492. Fine for not taking out certain licenses.

493. Fine for unlawfully commencing, carrying on or completing building work.

494. Fine for putting building to other than declared use.

495 Fine for using building for carrying on offensive trade without previous declaration.

496. Penalty on *mehters*, etc., withdrawing from work without notice.

497. Penalty for obstructing contractor or removing mark.

## PART IX.

### CHAPTER XXXVII

PROCEDURE.

*Licenses and written permissions*

498. Duration, conditions, signature, suspension, revocation and production of licenses and written permissions

*Public notices and advertisements*

499. Public notices how to be made known

500. Newspapers in which advertisements or notices to be published.

*Evidence*

501 Proof of consent, etc, of Corporation or municipal officer

*Signature and service of notices, etc*

502. Signature on notices, etc, may be stamped.

503 Notices, etc., by whom to be served or issued.

504. Service how to be effected on owner or occupier of premises.

505. Service how to be effected otherwise than on owner or occupier of premises.

506. Sections 503 to 505 not to apply to Magistrate's summons.

*Powers of entry.*

507. Power to Executive Officer to enter premises to inspect, survey, etc., and to use force in certain cases.

508. Power to Executive Officer to enter on lands adjacent to works.

509. Prohibition of obstructing entry under sections 507 or 508.

*Enforcement of orders to execute work, etc.*

510. Time for complying with requisition or order, and power to Corporation to enforce requisition or order in default of person directed.

SECTION.

511. Submission of objections to complying with notice

512. Right of person served with notice to require estimate of expenses of work.

513 Reference of objections to Corporation

*Recovery of expenses.*

514 Power to Corporation to accept agreement for payment of expenses in instalments

515. Power to Corporation to declare certain expenses to be improvement expenses

516. Improvement expenses how recoverable and by whom payable.

517. Right of owner or occupier to redeem charge for improvement expenses

518 Execution of work by occupier in default of owner, and deduction of expenses from rent.

519. Relief to receivers, agents and trustees.

*Payment of compensation*

520 General power to Corporation to pay compensation

521. Compensation to be paid by offenders for damage caused by them.

*Recovery of expenses or compensation in case of dispute*

522. Reference by Corporation to Small Cause Court in certain cases.

523. Application to Small Cause Court in other cases.

524 Recovery of sums ascertained under section 523 to be due.

525 Power to sue for expenses or compensation.

*Recovery of certain dues.*

526. Recovery of certain dues by distress and sale.

*Obstruction of owner by occupier.*

527. Application to Small Cause Court by owner when occupier prevents his complying with Act, etc.

*Proceedings before Court of Small Causes.*

528. General powers and procedure of Small Cause Courts

SECTION.

529. Fees in proceedings before Small Cause Courts.

530. Repayment of half-fees on settlement before hearing.

*Proceedings before Magistrates.*

531. Municipal Magistrates.

532. Cognizance of offences.

533. Power to Magistrate to hear case in absence of accused when summoned to appear

534. Limitation of time for prosecution.

535. Complaints concerning nuisances, and procedure thereupon

536 Power to Magistrate to direct demolition and payment of fine in respect of unlawful work.

*Legal proceedings.*

537 Power to Corporation to institute, etc., legal proceedings and obtain legal advice

538 Notice, limitation and tender of amends in suit against the Corporation, etc

539 Indemnity to the Corporation, etc

---

## PART X.

### CHAPTER XXXVIII.

SUPPLEMENTAL PROVISIONS

*Extension of Act to Howrah and to other municipalities in the neighbourhood of Calcutta.*

540. Power to local Government to notify intention to extend Act to Howrah or other neighbouring municipality

541. Power to local Government to extend Act after considering objections.

542. Effect of extension of Act.

543 Power to Local Government to include certain areas within Calcutta

544. Effect of inclusion.

*Police.*

545. Co-operation of the Police.

546. Power to Police to arrest offenders.

*Special provisions as to land and buildings in Hastings*

547. Control by General Officer Commanding the Presidency District over Government land and buildings.

SECTION.

548. Sanction of Government of India required to erection of masonry building.

549. Demolition or alteration of buildings erected without such sanction.

550. Provisions of sections 548 and 549 not to bar other provisions of the Act.

*Water-supply, sewers and gas mains.*

551. Preparation and maintenance of map in regard to water-supply system.

*General provisions.*

552. Power to authority to require any one or more of a number of things to be done

553. Who to be deemed owner or occupier, where there are gradations of owners or occupiers.

554. Councillors, Aldermen, municipal officers, etc., to be deemed public servants.

555 Prohibition of obstruction of municipal contractors

556. Prohibition of removal of mark

*Construction of references and savings*

557. Construction of references in other enactments.

558 Saving of prior enactments

## SCHEDULE I.

"CALCUTTA."

## SCHEDULE II.

CORRUPT PRACTICES

*Part I*

RULE.

1. Bribery.
2. Undue influence.
3. Personation.
4. Publication of false statements

*Part II.*

1. Acts under Part I.
2. Personation
3. Receipt of gratification
4. Payment for conveyance
5. Incurring expense without authority.
6. Hiring of liquor shops.
7. Issue of circulars, etc., without printer's and publisher's name printed thereon

## SCHEDULE III.

LIST OF CONSTITUENCIES.

## SCHEDULE IV.

LIST OF CONSTITUENCIES

## SCHEDULE V.

RETURN OF ELECTION EXPENSES.

## SCHEDULE VI.

RULES AS TO LICENSES FOR THE EXERCISE OR CARRYING ON OF PROFESSIONS, TRADES AND CALLINGS.

1. Classes of licenses, and tax on each.
2. Licenses to be either personal or local.
3. Personal license required for each separate profession, trade or calling.
4. Personal license for members of firms.
5. Local license required for each business.
6. Valuation of places of business not separately valued under Chapter X.
7. When both personal and local license required.
8. Occupier ordinarily to be licensee
9. Annual list of licensees.
10. Continuance of liability in same class.

RULE.

11. Time for presentation of applications for remissions, etc.
12. Power to Executive Officer to issue notices to take out licenses, etc.
13. Executive Officer to prove liability when service of notice not proved.
14. Appeal to Bench or to Court of Small Causes.
15. Statement by appellant.
16. Procedure of Court in appeal.
17. Finality of order of Corporation or Executive Officers when no appeal.

## SCHEDULE VII.

WARDS FOR PURPOSES OF VALUATION.

## SCHEDULE VIII.

TAX ON CARRIAGES AND ANIMALS

## SCHEDULE IX.

SCAVENGING-TAX.

## SCHEDULE X.

FORM OF NOTICE OF DEMAND.

## SCHEDULE XI.

FORM OF WARRANT OF DISTRESS.

## SCHEDULE XII.

TABLE OF FEES PAYABLE ON WARRANTS OF DISTRESS.

## SCHEDULE XIII.

FORM OF NOTICE OF SALE.

## SCHEDULE XIV.

RULES AS TO PRIVATE CONNECTIONS TO PREMISES AND METERS.

*Private connections to premises.*

1. Separate service-pipes for separate premises.
2. Separate stop-cocks and underground hydrants or taps for supply of unfiltered water to

RULE.

3. Outer stop-cocks.
4. Size of ferrules.
5. Construction of service-pipes, ferrules and works.
6. Power to Corporation to inspect premises.
7. Replacing or alteration of fittings for supplying water.
8. Inspection of works, etc., by qualified officer before permitting connection with mains

*Meters.*

9. Testing of meter.
10. Payment by occupier in case of incorrectness of meter
11. Replacing of meter.
12. Prohibition of fraud in respect of meter
13. Prohibition of injuring meter or fittings

## SCHEDULE XV.

RULES AS TO DRAINS, PRIVIES AND URINALS

*Drains.*

1. Plans of house-drains to be submitted to Corporation
2. Material and joints.
3. Size.
4. Angles.
5. How to be laid
6. Prohibition of inlet within building.
7. Traps.
8. Ventilation.
9. Soil-pipe of connected-privy or urinal.
10. Ventilation of soil-pipe of connected-privy or urinal detached from building.
11. Waste-pipes.
12. Open house-drains.
13. Type-plans.
14. Maintenance of house-drains kept up for the benefit of certain premises only.
15. Maintenance of house-drains jointly used by two or more premises.
16. Power to Executive Officer to supervise and require alteration of work of laying underground drain.
17. Restriction on construction of drain beneath building.
18. Drains passing beneath a building.

RULE.

*Privies and urinals.*

19. Plans of privies and urinals to be submitted to Corporation.
20. Power to Corporation to refuse to sanction service-privy or service-urinal which will be a nuisance.
21. Regulation of site of service-privies and service-urinals.
22. Power to Corporation to require substitution of connected-privies for service-privies and connected-urinals for service-urinals.
23. Power to Corporation to require owner to provide access to service-privy or service-urinal from street.
24. Models and type-plans.
25. Drains.
26. Floor.
27. Walls and roof.
28. Platform.
29. Ventilation of privies and urinals in, or adjacent to, buildings.
30. Service-privies and urinals to be provided with a movable receptacle for sewage.
31. Connected-privies and urinals to be separated from kitchens, etc.
32. Flushing of connected-privies and of urinals
33. Pan for connected-privies and urinals.
34. Water-trap.
35. Syphon-trap and anti-syphonage pipe.
36. Prohibition of "containers" and "D traps."
37. Soil-pipe for connected-privies and connected urinals.
38. Enforcement of the foregoing rules in the case of future privies or urinals.

---

## SCHEDULE XVI.

RULES AS TO THE REGULATION, MAINTENANCE, PROTECTION AND REPAIR OF STREETS AND PUBLIC PLACES.

*Regulation, maintenance and protection of streets and public places.*

1. Cutting of hedges and trees and power to Corporation to cause same to be cut.
2. Regulation of verandahs, etc., projecting over streets.
3. Sky-signs.

RULE.

*Execution of works in public streets.*

4. Guarding and lighting when public street opened or broken up and speedy completion of work.
5. Power to Corporation to prevent or restrict traffic in street during progress of work.

*Naming of public streets and numbering of premises.*

6. Posting of street names.
7. Numbering of premises.
8. Corporation to keep a register of premises.

---

## SCHEDULE XVII

RULES AS TO THE USE OF BUILDING-SITES AND THE EXECUTION OF BUILDING-WORK.

*Part I.—Building-sites.*

1. Conditions as to use of building-sites
2. Certificate as to correctness of plans of a previously existing building and fees therefor.

*Part II.—Buildings generally.*

3. Height.
4. Level of floor
5. Provision of fire-escapes, stair-cases and lift in certain buildings.
6. Certain buildings not to be erected within six feet of a service-privy.
7. Prohibition of use of inflammable materials for roofs or external walls.

*Part III.—Masonry buildings generally.*

8. Foundation.
9. Plinth.
10. Footings for walls.
11. Outer walls.
12. Bonding of walls.
13. Damp-proof course.
14. Walls in building of more than one story.
15. Floors.
16. Beams and girders.
17. Terrace-roofs.

RULE.

18. Power to Corporation to regulate height of boundary wall.

19. Notice to be sent to Corporation before commencing work.

20. Notice after completion of work.

21. Inspection of masonry buildings by Corporation.

22. Power to Corporation to take action after making inspection.

*Part IV.—Dwelling-houses and other domestic buildings.*

23. Proportion of site for dwelling-house which may be built upon.

24. Dwelling-houses and out-offices where two-thirds of site are left vacant.

25 Size and ventilation of inhabited rooms.

26. Floor of inhabited room over stable, cattle-shed or cow-house.

27. Lighting and ventilation of staircases.

28. Ground floor.

29 Court-yard of dwelling-house

30. Open space in rear of building, regulating the rear height.

31. Relaxation of rule 30 in certain cases

32. Open space at sides of building.

33. Court-yards and outward open spaces to be raised and kept open.

34. Paving and draining of court-yards and open spaces.

35. Space to be added to street not to be taken into account under rules 23, 24, 30 and 32.

36. Open space prescribed for one site not to be taken for another site.

37. Position of privies in a domestic building.

*Part V.—Buildings of the warehouse class.*

38. Height of buildings of the warehouse class.

39. Open spaces for buildings of the warehouse class.

40. Floors of certain buildings of the warehouse class.

41. Additional open space for buildings of the warehouse class for loading or unloading carts.

RULE.

*Part VI.—Public buildings.*

42. Application of certain provisions of Part IV to public buildings.

43. Use of incombustible or fire-resisting materials

44. Materials to be deemed incombustible.

45 Materials to be deemed to be fire-resisting, but not incombustible

46. Walls for staircases.

47. Uniformity in treads and risers in staircases

48. Width of staircases, internal corridors and passage-ways

49 Division of wide staircase by hand-rail.

50 Separate means of exit from floors on different levels

51. Doors and barriers to open outwards

*Part VII —Applications for permission to erect new buildings other than huts*

52 Application to Corporation for permission to erect a masonry new building.

53 Particulars to be furnished in, and with, such applications.

54. Signature of plans, elevations and sections

55 Necessary employment of licensed building surveyor or other competent person to supervise building

56 Formulation of requirements and objections

57. Permission to execute work when to be given or refused by the Corporation

58. Remedy if Corporation delay grant or refusal of permission.

59. Grounds on which permission to erect a masonry new building may be refused.

60 Signature of approved plans

61. Retention of plan and submission of fresh application, after refusal to permit execution of work.

62. Work not to be commenced unless and until permission given.

63. Special powers to Corporation to suspend or grant permission to erect a masonry building or convert huts, etc., into a masonr building.

RULE.

64. Lapse of permission, if not acted upon within three years, or, if granted before a certain date, except in certain circumstances

65. Power to Corporation to cancel permission on the ground of material misrepresentation by applicant

*Part VIII.—Huts.*

66. Continuous lines.

67. Distance between eaves and alignment

68 Use of spaces referred to in rule 67.

69 Erection of huts in a *bustee* in court-yard formation.

70. Area of court-yard in huts not in a *bustee*.

71. Space between huts.

72. Distance of huts from metalled and sewered street.

73. Distance between hut and masonry building

74 Distance between hut and cow-house, etc.

75 Prohibition of projections or dropping of water over street or passage.

76. Height

77. Plinth.

78. Rooms.

79. Court-yards.

*Part IX.—Applications for permission to erect new buildings which are huts.*

80 Application to be sent, and particulars furnished, to Corporation by person intending to erect a hut.

81. Application for permission to erect a hut.

82 Power to Corporation to require further information or a proper site-plan.

83 Power to Corporation to employ licensed building surveyor to prepare site-plan, etc., for hut.

84. Permission to execute work when to be given or refused.

85. Remedy if Corporation delay grant or refusal of permission.

86. Grounds on which permission to erect a hut may be refused.

87. Retention of plan, and submission of fresh application, after refusal of permission to erect a hut.

RULE.

88 Work not to be commenced unless and until permission given

89 Lapse of permission, if not acted upon within six months.

*Part X.—Application of rules in this schedule to alterations of, and additions to, buildings*

90. Relaxation of rule 3.

91. Applicability of rule 36 to alterations and additions above the ground floor

92. Restriction on application of rules 52 to 65, or 80 to 89.

93 Grant of provisional permission to proceed with work in cases of urgency

94 Power of Corporation to relax certain rules as provided under section 331

## SCHEDULE XVIII

RULES FOR THE INSPECTION AND REGULATION OF LAND AND BUILDINGS.

1. Power to inspect premises for sanitary purposes

2 Power to Corporation to require cleansing and lime-washing of building

3 Power to Corporation to require owner to secure, enclose, cleanse, or clear land or building which is untenanted, filthy or a nuisance

4. Power to Corporation to demolish, repair or secure wall, building or fixture in a ruinous state, etc.

5 Power to Corporation to sell materials of buildings demolished in pursuance of notice issued under rule 4.

6 Further powers to Corporation with reference to insanitary or congested buildings.

7. Power to Corporation to direct the filling up, etc., of unwholesome wells, pools, etc.

8. Power to Executive Officer to take action in case of a serious nuisance affecting the public health.

9 Power to Corporation to regulate excavations.

## SCHEDULE XIX.

CERTAIN PURPOSES FOR WHICH PREMISES MAY NOT BE USED WITHOUT A LICENSE.

## SCHEDULE XX.

FORM OF CERTIFICATE

---

## SCHEDULE XXI.

REGISTRATION OF BIRTHS

---

## SCHEDULE XXII

REGISTRATION OF DEATHS

---

## SCHEDULE XXIII.

FORM OF NOTICE TO BE ISSUED ON YELLOW PAPER AND AFFIXED ON PREMISES WHEN OTHER MEANS OF SERVICE NOT AVAILABLE.

# BENGAL ACT III OF 1923.

## THE CALCUTTA MUNICIPAL ACT, 1923.

*An Act to amend and consolidate the law relating to the Municipal Affairs of the Town and Suburbs of Calcutta.*

Preamble

Whereas it is expedient to amend and consolidate, in the manner hereinafter appearing, the law relating to the municipal affairs of the town and suburbs of Calcutta;

And whereas the previous sanction of the Governor General required by section 80A, sub-section (*3*), of the Government of India Act, has been obtained to the passing of this Act; 5 & 6, Geo V, c 61, 6 & 7, Geo V, c 37, 9 & 10, Geo V, c 101

It is hereby enacted as follows.—

## PART I.

### CHAPTER I

### PRELIMINARY.

Short title, extent and commencement

**1.** (*1*) This Act may be called the Calcutta Municipal Act, 1923

(*2*) Except as is hereinafter otherwise expressly provided, it applies only to Calcutta

(*3*) It shall come into force on the first day of April, 1924:

Provided that, before the said first day of April, 1924, and at such time (after this Act is published in the *Calcutta Gazette* after having received the assent of the Governor General) as the Local Government shall appoint, a general election and appointment of Councillors shall be held and made in the manner provided in this Act, and such election and appointment shall be deemed to have been held and made under the provisions of this Act, but such election or appointment shall not take effect until the said first day of April. For the purposes of such election, the Chairman of the Corporation shall exercise and perform the same powers and duties in Calcutta, as are conferred or imposed by or under this Act on the Executive Officer.

*Explanation.*—In this proviso, as elsewhere in this Act, the word "Calcutta" includes the area added to Calcutta as defined in clause (*1*) of section 3

Repeal of enactments and savings.

**2.** (*1*) The following enactments are hereby repealed, namely:—

(*a*) the Calcutta Municipal Act, 1899, Ben Act III of 1899

(*b*) the Calcutta Municipal (Loans) Act, 1914, and Ben Act IV of 1914

(*c*) the Calcutta Municipal (Amendment) Act, 1917. Ben Act I of 1917

(*2*) In the area added to Calcutta—

(*a*) the Bengal Municipal Act, 1884, and Ben Act III of 1884.

(*b*) the Bengal Food Adulteration Act, 1919, Ben Act V of 1919.

shall be deemed to be repealed.

(*Part I.—Chapter I.—Preliminary.—Section 3.*)

(*3*) Every budget passed, loan taken, assessment, plan of a projected public street, measurement or division made, standard plan of a *bustee* approved, license, permission or sanction granted and debenture or notice issued under the Calcutta Municipal Act, 1899, shall, so far as it is in force at the commencement of, and is not inconsistent with, this Act, be deemed to have been respectively passed, taken, made, approved, granted or issued under this Act, and shall (unless previously altered, modified, cancelled, repaid, suspended, surrendered or withdrawn, as the case may be, under this Act) remain in force for the period (if any) for which it was so passed, taken, made, approved, granted or issued. Ben. Act III of 1899

(*4*) Except as the Local Government may otherwise, by notification in the *Calcutta Gazette*, direct, all rules, by-laws, regulations, orders, directions and powers made, issued or conferred under the provisions of the Calcutta Municipal Act, 1899, and in force at the date of the commencement of this Act, shall apply to the area added to Calcutta in supersession of all corresponding rules, by-laws, regulations, orders, directions and powers (if any) made, issued or conferred under either of the Acts repealed in such area under sub-section (*2*), and every appointment made in the area added to Calcutta under either of the said Acts shall, so far as it is not inconsistent with the provisions of this Act, continue in force, and be deemed to have been made under the provisions of this Act, unless and until it is superseded by any appointment made under this Act.

(*5*) The Local Government may, by notification in the *Calcutta Gazette*, appoint a person to exercise and perform the powers and duties which are conferred or imposed by or under this Act on the Executive Officer until that officer is appointed under section 51, sub-section (*1*).

Definitions

**3.** For the purposes of this Act, unless there is anything repugnant in the subject or context,—

"Area added to Calcutta"

(*1*) the expression "area added to Calcutta" means—

(*i*) the Maniktala Municipality;

(*ii*) the Cossipur-Chitpur Municipality;

(*iii*) the Garden Reach Municipality;

(*iv*) the new Dock Extension area, vested in the Commissioners of the Port of Calcutta, for the construction of King George's Dock and the works in connection therewith and lying partly within the jurisdiction of the District Board of the 24-Parganas and partly within the jurisdiction of the South Suburban Municipality; and

(*Part I.—Chapter I.—Preliminary.—Section 3.*)

(*v*) that portion of the Tollygunj Municipality which comprises the Ballygunj Pumping Station and the High Level Outfall Sewer;

"Adulterated"

(*2*) an article shall be deemed to be "adulterated"—

(*a*) in the case of drugs—

(*i*) if, when it is sold or exposed for sale under or by a name recognised in the British, German, American or any other Pharmacopœia which the Local Government may specify by notification in the *Calcutta Gazette*, it differs from the standard of strength, quality or purity laid down in the said Pharmacopœia, unless the standard of strength, quality or purity of such drug be plainly stated on the bottle, box or other receptacle, or

(*ii*) if its strength, quality or purity falls below the professed standard under which it is sold or exposed for sale,

(*b*) in the case of confectionery—

if it contains any mineral substance or poisonous colour or flavour or other ingredients deleterious or detrimental to health, and

(*c*) in the case of food—

(*i*) if any substance has been mixed and packed with it so as to reduce or lower or injuriously affect its quality or strength, or

(*ii*) if any substance has been substituted wholly or in part for the article, or

(*iii*) if any valuable constituent of the article has been wholly or in part abstracted, or

(*iv*) if it is mixed, coloured, powdered, coated or stained in a manner whereby damage or inferiority is concealed, or

(*v*) if it does not comply with the standard prescribed therefor by or under this Act or under any other law for the time being in force, or

*(Part I—Chapter I.—Preliminary.—Section 3)*

(*vi*) if it contains or is mixed or diluted with any substance in any quantity to the prejudice of the purchaser or consumer or in any proportion which diminishes in any manner its food value or nutritive properties as compared with the same in a pure or normal state and in an undeteriorated and sound condition, or

(*vii*) if it contains any added poisonous or other added deleterious ingredient which may render such article injurious to health, or

(*viii*) if it is not of the nature, substance or quality which it purports or is represented to be.

"Agent"

(*3*) "agent" in section 46 and in Schedule II includes an election agent,

"Assessment-book"

(*4*) "assessment-book" means the municipal assessment book prescribed by section 143, and includes any books subsidiary thereto;

"Bazar"

(*5*) "*bazar*" means any place of trade (other than a market) where there is a collection of shops or warehouses which the Corporation may, by resolution, declare to be a *bazar*;

"Budget-grant"

(*6*) "budget-grant" means a sum entered on the expenditure side of a Budget Estimate which has been finally adopted, and includes also any sum by which a budget-grant is at any time increased by a transfer under clause (*c*) of sub-section (*1*) of section 95,

"Building"

(*7*) "building" includes a house, out-house, stable, privy, urinal, shed, hut, wall (other than a boundary wall not exceeding ten feet in height) and any other such structure, whether of masonry, bricks, wood, mud, metal or any other material whatsoever, but does not include a *hogla* or other similar kind of temporary shed erected on ceremonial festive occasions;

"Building-line"

(*8*) "building-line" means the line up to which the main wall of a building abutting on a street or a projected public street may lawfully extend;

"Building of the warehouse class."

(*9*) "building of the warehouse class" means a building the whole, or a substantial part of which, is used, or intended to be used, as a warehouse, factory, manufactory, brewery, or distillery, or for any similar purpose, which is neither a "domestic building," nor a "public building" as defined in this section, and includes a hut used or intended to be used for any of the purposes mentioned in this clause;

(*Part I.—Chapter I.—Preliminary.—Section 3.*)

"*Bustee*"

(*10*) "*bustee*" means an area containing land occupied by, or for the purposes of, any collection of huts—

(*a*) standing on a plot of land not less than ten *cottahs* in area and bearing one number in the assessment book, or

(*b*) standing on two or more plots of land which are adjacent to one another and exceed in the aggregate one *bigha* in area;

"Calcutta."

(*11*) "Calcutta" includes the area added to Calcutta and means the area described in Schedule I and any other area which the Local Government may include in that schedule on the issue of a notification in the *Calcutta Gazette* under section 543;

"Candidate"

(*12*) "candidate" in section 16 and in Schedule II means a person who has been nominated as a candidate at any election of a Councillor or who claims that he has been so nominated or that his nomination has been improperly refused, and includes a person who, when an election is in contemplation, holds himself out as a prospective candidate at such election, provided that he is subsequently nominated as a candidate at such election;

"Carriage"

(*13*) "carriage" means any wheeled vehicle, with springs or other appliances acting as springs, which is ordinarily used for the conveyance of human beings, and includes a *jinrickshaw*, but does not include a bicycle and a tricycle (other than a motor bicycle or motor tricycle), or a perambulator or other form of vehicle designed for the conveyance of small children;

"Cart"

(*14*) "cart" means any cart, hackery or wheeled vehicle with or without springs, which is not a "carriage" as defined in this section, and includes a hand-cart;

"Connected-privy"

(*15*) "connected-privy" means a privy which is directly connected with a sewer;

"Connected-urinal."

(*16*) "connected-urinal" means a urinal which is directly connected with a sewer;

"Corrupt practice"

(*17*) "corrupt practice" means any act deemed to be a corrupt practice under the provisions of Schedule II;

"Cubical extent."

(*18*) the expression "cubical extent" when used with reference to the measurement of a building, means the space contained within the external surfaces of its walls and roof and the upper surface of the floor of its lowest or only storey;

*(Part I.—Chapter I.—Preliminary.—Section 3.)*

"Dairy."

(19) "dairy" includes any farm, cattle-shed, cow-house, milk-store, milk-shop, or other place from which milk is supplied only on, or for, sale or in which milk is kept, or used for the purposes of sale, or manufacture into butter, *ghee*, cheese, curds, or dried or condensed milk, for sale,

and in the case of a dairyman, who does not occupy any premises for the sale of milk, includes the place where he keeps the vessels used by him for the sale of milk, but does not include—

(*a*) a shop from which milk is not supplied otherwise than in properly closed and unopened receptacles in which it was delivered to the shop, or

(*b*) a shop or other place in which milk is sold for consumption on the premises only, or

(*c*) a shop or place from which milk is sold or supplied in hermetically closed and unopened receptacles in the same original condition in which it was first received in such shop or place;

"Dairyman"

(20) "dairyman" includes any occupier of a dairy, any cow-keeper who trades in milk, or any seller of milk whether wholesale, or by retail;

"Dangerous disease"

(21) "dangerous disease" means—

(*a*) cholera, plague, small-pox, cerebro-spinal meningitis and diphtheria; and

(*b*) any other epidemic, endemic or infectious disease which the Local Government may, by notification in the *Calcutta Gazette*, declare to be a dangerous disease for the purposes of this Act;

"Depôt"

(22) "depôt" means a place where bulky articles are stored, whether for sale or otherwise but not for domestic consumption, in quantities exceeding fifty maunds;

"Domestic building"

(23) "domestic building" includes a dwelling-house and any other masonry building which is neither a "building of the warehouse class" nor a "public building," as defined in this section, nor a place exclusively used for private worship;

"Domestic purposes"

(24) a supply of water for "domestic purposes" shall not be deemed to include a supply—

(*a*) for animals or for washing carriages, where such animals or carriages are kept for sale or hire,

(*b*) for any trade, manufacture or business,

(*c*) for fountains,

(*d*) for watering gardens or streets,

(*e*) for any ornamental or mechanical purpose,

(*f*) for building purposes, or

(*g*) for flushing purposes;

*(Part I.—Chapter I.—Preliminary.—Section 3.)*

"Drain" (*25*) "drain" includes a sewer, a house-drain, a drain of any other description, a tunnel, a culvert, a ditch, a channel and any other device for carrying off sullage, sewage, offensive matter, polluted water, rain-water or sub-soil water;

"Drug." (*26*) "drug" means any substance used as medicine or in the composition or preparation of medicines, whether for internal or external use;

"Dwelling-house." (*27*) "dwelling-house" means a masonry building constructed, used or adapted to be used wholly or principally for human habitation;

"Edible oil or fat" (*28*) "edible oil or fat" means the oil or fat commonly used as wholesome foodstuff, which is free from rancidity and decomposition, and does not contain any mineral oil, *pakra* oil or any other substance injurious to health;

"Election agent" (*29*) "election agent" means the person appointed under section 27, sub-section (*2*), by a candidate as his agent for an election,

"Executive Officer" (*30*) "Executive Officer" means the Chief Executive Officer appointed under section 51, sub-section (*1*), and includes an acting Executive Officer appointed during his temporary absence;

"Food" (*31*) "food" includes every article used for food or drink by man, other than drugs or water, and any article which ordinarily enters into or is used in the composition or preparation of human food; and also includes confectionery, flavouring and colouring matters and spices and condiments;

"Habitable room" (*32*) "habitable room" means a room constructed or adapted for human habitation;

"Half-year" (*33*) "half-year" means half of a financial year,

"House drain" (*34*) "house-drain" means any drain of, and used for the drainage of, one or more premises;

"House-gully." (*35*) "house-gully" means a passage or strip of land constructed, set apart or utilized for the purpose of serving as a drain or of affording access to a privy, urinal, cesspool or other receptacle for filthy or polluted matter to municipal servants or to persons employed in the cleansing thereof or in the removal of such matter therefrom, and includes the air space above such passage or land;

"Hut." (*36*) "hut" means any building, no substantial part of which, excluding the walls up to a height of eighteen inches above the floor or floor level, is constructed of masonry, steel, iron or other metal;

"Inhabited room." (*37*) "inhabited room" means a room in which some person passes the night, or which is used as a living room, and includes a room with respect to which there is a reasonable presumption (until the contrary is shown) that some person passes the night therein or that it is used as a living room;

(*Part I.—Chapter I.—Preliminary.—Section 3.*)

"Label" (*38*) "label" includes any tag, brand, mark or statement in writing on or attached to or used in connection with any package containing any article of food, drug or substance;

"Market" (*39*) "market" includes any place where persons assemble for the sale of meat, fish, fruit, vegetables, live-stock or any other article of food;

"Masonry building" (*40*) "masonry building" means any building other than a hut, and includes any structure a substantial part of which is made of masonry, steel, iron or other metal;

"Milk" (*41*) "milk" includes cream, skimmed milk, separated milk and condensed and dessicated milk;

"Misbranded" (*42*) all drugs or articles of food which enter into the composition of food, the package or label of which bears any statement, design or device regarding such drugs or articles or the ingredients or substances contained therein as may be false or may mislead in any particular, shall be deemed to be "misbranded"; and a drug or an article of food shall also be deemed to be misbranded, if it is offered for sale under the name of another drug or article of food;

"Municipal drain" (*43*) "municipal drain" means a drain vested in the Corporation;

"Municipal market" (*44*) "municipal market" means a market belonging to or maintained by the Corporation;

"Municipal slaughter-house" (*45*) "municipal slaughter-house" means a slaughter-house belonging to or maintained by the Corporation;

"New building" (*46*) the expression "new building" means and includes—

(*a*) any building erected from the ground upwards after the commencement of this Act,

(*b*) any building which, having collapsed or been demolished or burnt down for more than one-half of its cubical extent, is re-erected wholly or partially after the commencement of this Act, whether the dimensions of the re-erected building are the same as those of the original building or not,

(*c*) any hut which is converted into a masonry building after the commencement of this Act, and

(*d*) any building not originally constructed for human habitation which is converted into a place for human habitation after the commencement of this Act:

*Explanation.*—Sub-clause (*b*) applies whether more than half the cubical extent has collapsed or been demolished or burnt down at the same time or at different times:

(*Part I.—Chapter I.—Preliminary.—Section 3.*)

"Nuisance"

(*47*) "nuisance" includes any act, omission, place or thing which causes or is likely to cause injury, danger, annoyance or offence to the sense of sight, smell or hearing, or which is or may be dangerous to life or injurious to health or property;

"Occupier"

(*48*) "occupier" includes any person for the time being paying, or liable to pay, to the owner the rent or any portion of the rent of the land or building in respect of which the word is used or damages on account of the occupation of such land or building, and also an owner living in, or otherwise using, his own land or building and also a rent-free tenant;

"Offensive matter"

(*49*) "offensive matter" means kitchen or stable refuse, dung, dirt, putrid or putrefying substances, and filth of any kind which is not included in "sewage" as defined in this section;

(*50*) "owner" includes the person for the time being receiving the rent of any land or building or of any part of any land or building, whether on his own account or as agent or trustee for any person or society or for any religious or charitable purpose, or as a receiver, or who would so receive such rent if the land, building or part thereof were let to a tenant;

"Package"

(*51*) "package" includes every means by which goods for carriage or for storage or for sale are cased in, covered, enclosed, contained or packed;

"Party-wall"

(*52*) "party-wall" means a wall forming part of a building and used or constructed to be used for the support and separation of adjoining buildings belonging to different owners or constructed or adapted to be occupied by different persons,

"Platform"

(*53*) the word "platform," when used with reference to a privy, means the surface containing the aperture through which the sewage passes into the receptacle or sewer;

"Private street"

(*54*) "private street" means any street, road, lane, gully, alley, passage or square which is not a "public street" as defined in this section, and includes any passage securing access to four or more premises, belonging to the same or different owners, but does not include a passage provided in effecting a partition of any masonry building amongst joint owners where such passage is not less than eight feet wide;

"Public analyst,"

(*55*) "public analyst" means any person to be appointed by the Corporation to perform the duties and to exercise the powers of a public analyst prescribed by this Act;

(*Part I.—Chapter I.—Preliminary.—Section 3.*)

"Public building."

(*56*) "public building" means a masonry building constructed, used or adapted to be used—

(*a*) as a place of public worship, or as a school, college or other place of instruction (not being a dwelling-house so used), or as a hospital, work-house, public theatre, public hall, public concert-room, public ball-room, public lecture-room, public library or public exhibition room, or as a public place of assembly, or

(*b*) for any other public purpose, or

(*c*) as an hotel, lodging-house, home, refuge, or shelter, where the building exceeds in cubical extent two hundred and fifty thousand cubic feet or has sleeping accommodation for more than one hundred persons,

"Public street"

(*57*) "public street" means any street, road, lane, gully, alley, passage, pathway, square or court, whether a thoroughfare or not, over which the public have a right of way,

and includes—

(*a*) the roadway over any public bridge or causeway,

(*b*) the footway attached to any such street, public bridge or causeway, and

(*c*) the drains attached to any such street, public bridge or causeway,

and, where there is no drain attached to any such street, shall, unless the contrary is shown, be deemed to include also, all land up to the outer wall of the premises abutting on the street, or, if a street alignment has been fixed, then up to such alignment;

"Railway"

(*58*) "railway" includes a tramway;

"Registered medical practitioner"

(*59*) "registered medical practitioner" means a medical practioner registered under the Bengal Medical Act, 1914; Ben Act VI of 1914

"Reside"

(*60*) (*a*) a person shall be deemed to "reside" in any dwelling-house or hut which, or some portion of which, he sometimes, although not uninterruptedly, uses as a sleeping apartment, and

(*b*) a person shall not be deemed to cease to "reside" in any such dwelling-house or hut merely because he is absent from it or has elsewhere another dwelling-house or hut in which he resides, if there is the liberty of returning to it at any time and no abandonment of the intention of returning to it;

"Rubbish."

(*61*) "rubbish" means dust, ashes, broken bricks, mortar, broken glass, and refuse of any kind which is not "offensive matter" as defined in this section;

"Service-privy."

(*62*) "service-privy" means a fixed privy which is cleansed by hand, but does not include a movable commode;

*(Part I.—Chapter I.—Preliminary.—Section 4.)*

"Service-urinal"

(63) "service-urinal" means a fixed urinal which is cleansed by hand;

"Sewage."

(64) "sewage" means night-soil and other contents of privies, urinals, cesspools or drains, and includes trade effluents and discharges from manufactories of all kinds;

"Sky-sign"

(65) "sky-sign" means any word, letter, model, sign, device or other representation, in the nature of an advertisement, announcement or direction, which is supported on or attached to any post, pole, standard, framework or other support wholly or in part upon, over or above any building or structure and which is wholly or in part visible against the sky from any point in any street or public place, and includes—

(a) every part of such support, and

(b) any balloon, parachute or similar device employed wholly or in part for the purposes of any advertisement or announcement on, over or above any building, structure or erection of any kind, or on or over any street or public place;

but shall not be deemed to include—

(i) any flagstaff, pole, vane or weather-cock, unless adapted or used wholly or in part for the purposes of any advertisement or announcement,

(ii) any sign on any board, frame or other contrivance securely fixed to or on the top of the wall or parapet of any building, on the cornice or blocking-course of any wall, or to the ridge of a roof, if such contrivance be of one continuous face and not open work and does not extend in height more than three feet above any part of such wall, parapet or ridge, or

(iii) any representation which relates exclusively to the business of a railway company, and which is placed wholly upon or over any railway, railway station, yard, platform or station approach, or premises belonging to a railway company, and which is also so placed that it could not fall into any street or public place;

"Slaughter-house."

(66) "slaughter-house" means any place used for the slaughter of cattle, sheep, goats, kids or pigs for the purpose of selling the flesh thereof as meat;

"Street"

(67) "street" means a public or private street;

"Street alignment"

(68) "street alignment" means the line dividing the land comprised in and forming part of a street from the adjoining land; and

"Year"

(69) "year" means a financial year.

Power to Corporation to decide whether area is a *bustee* or not.

**4.** The Corporation may decide whether any particular area is or is not a "*bustee*" as defined in section 3, and their decision shall be final.

## PART II.

### CONSTITUTION AND GOVERNMENT.

### CHAPTER II.

### THE CORPORATION.

*Constitution.*

Constitution and incorporation of the Corporation

**5.** The Corporation shall consist of—

(*a*) seventy-five elected Councillors,

(*b*) ten Councillors to be appointed by the Local Government,

(*i*) to secure the association in the municipal administration of persons specially fitted in the opinion of the Local Government for appointment as Councillors, and

(*ii*) to secure the representation of minorities including the backward and labouring classes, and

(*c*) five Aldermen to be elected by the Councillors in the manner provided in section 9,

and shall, by the name of "the Corporation of Calcutta", be a body corporate and have perpetual succession and a common seal, and may by such name sue and be sued.

Property vested in the Corporation

**6.** All property, movable and immovable, and all interests of whatsoever nature or kind therein, vested in the Corporation of Calcutta as constituted under the Calcutta Municipal Act, 1899, at the commencement of this Act, with all rights of whatsoever description used, enjoyed or possessed by the said Corporation, and all rights and interests in immovable property situated within the area added to Calcutta which are now vested in, or held in trust for, the Commissioners of the Maniktala, Cossipur-Chitpur, Garden Reach and Tollyganj Municipalities and all movable property now vested in or held in trust for, and all sums due at the commencement of this Act, whether on account of rates, tolls, taxes and fees or otherwise, to the Commissioners of the Maniktala, Cossipur-Chitpur or Garden Reach Municipalities, shall be deemed to be vested in the Corporation as constituted under this Act. Ben Act III of 1899

Transfer of liabilities

**7.** All contracts made and liabilities incurred by the Corporation of Calcutta as constituted under the Calcutta Municipal Act, 1899, or by the Commissioners of the Maniktala or Cossipur-Chitpur or Garden Reach Municipalities, may, so far as they are outstanding at the commencement of this Act, be enforced by and against the Corporation of Calcutta as constituted under this Act.

Constituencies

**8.** The elected Councillors shall be elected by the constituencies specified in Schedule III, and the number of Councillors to be elected by each constituency and the number of seats to be reserved for Muhammadans in any constituency shall be as stated therein against that constituency.

*(Part II.—Chapter II.—The Corporation.—Sections 9—12.)*

Election of Aldermen.

**9.** (*1*) The five Aldermen referred to in clause (*c*) of section 5 shall be elected at a meeting of the elected and appointed Councillors to be held after the publication of the results of a general election and of the appointments made at that time within such period as the Local Government may fix and in such manner as they may prescribe, and such election shall take effect from the date on which the general election takes effect:

Provided that no Councillor shall be entitled to be elected as an Alderman.

(*2*) If there is any dispute as to the election of an Alderman, the matter shall be referred to for the decision of the Local Government, whose decision shall be final. If the Local Government set aside any such election, a fresh election shall be held.

Annual election of Mayor and Deputy Mayor.

**10.** (*1*) The Corporation shall, at their first meeting in each year, elect two of their number to be Mayor and Deputy Mayor, respectively, until the first meeting in the next following year.

(*2*) If any vacancy occurs in the office of Mayor or Deputy Mayor, the Corporation shall elect one of their number to fill such vacancy, and the Mayor or Deputy Mayor so appointed shall continue in office so long only as the person in whose place he is appointed would have been entitled to continue in office.

*Powers, duties and functions of the Corporation.*

Annual administration report and statement of accounts by the Corporation.

**11.** (*1*) The Corporation shall, as soon as may be after each first day of April, cause to be prepared a detailed report of the municipal administration of Calcutta during the previous year, together with a statement showing the amounts of the receipts and disbursements, respectively, credited and debited to the Municipal Fund during the said year, and the balance at the credit of the said fund at the close of the said year; and a report for the same period from the head of each department of the Corporation shall be incorporated in the said report.

(*2*) The Corporation shall thereupon forward a copy of the said report and statement to each Councillor and Alderman and to the Local Government.

(*3*) The Corporation shall, as soon as may be thereafter, consider the said report and statement, and a copy of the proceedings of any meeting at which the same may be discussed shall be forwarded by the Corporation to the Local Government.

(*4*) Copies of all the aforesaid documents shall be obtainable by any person requiring the same, on payment of such reasonable fee for each copy as the Corporation may determine.

Delegation of Corporation's functions.

**12.** (*1*) The Corporation may, by a resolution passed at a special meeting, delegate to the Executive Officer any of the Corporation's powers, duties or functions under this Act or under any rule or by-law made thereunder.

*(Part II.—Chapter II.—The Corporation.—Section 13.)*

(2) The Executive Officer may, by a general or special order in writing, re-delegate to any municipal officer any of the powers, duties or functions which have been delegated to him by the Corporation under sub-section (1)

(3) The Executive Officer may, by a general or special order in writing, delegate to any municipal officer any of the powers, duties or functions conferred or imposed upon or vested in him under this Act or under any rule or by-law made thereunder, except those conferred or imposed upon or vested in him under section 140 of this Act:

Provided that when, by any order made under this sub-section, any power to enter premises between sunset and sunrise is delegated to any municipal officer, the name of such officer, as well as his official designation, shall be specified in the order.

(4) The exercise or discharge by the Executive Officer of any powers, duties or functions delegated to him under sub-section (1) shall be subject to such conditions and limitations (if any) as may be prescribed in the said order, and also to control and revision by the Corporation; and the exercise or discharge by any municipal officer of any powers, duties or functions delegated to him under sub-section (2) or sub-section (3) shall be subject to such conditions and limitations (if any) as may be prescribed in the said order, and also to control and revision by the Executive Officer:

Provided that, if, in delegating any of their powers, duties or functions to the Executive Officer under sub-section (1) the Corporation direct that the action of that officer shall be final, then the exercise or discharge by him of the power, duty or function so delegated shall not be subject to control or revision by the Corporation.

Exercise of functions to be subject to sanction of the necessary expenditure.

**13.** The exercise or performance by any municipal officer of any power conferred or duty imposed by or under this Act which will involve expenditure shall, except in any case specified in the proviso to section 85, be subject to the following conditions, namely:—

(a) such expenditure, so far as it is to be incurred in the year in which such power is exercised or duty performed, shall be provided for under a current budget-grant, and,

(b) if the exercise of such power or the performance of such duty involves or is likely to involve expenditure for any period or at any time after the close of the said year, liability for such expenditure shall not be incurred without the sanction of the Corporation:

Provided that clause (b) shall not apply where the proposed expenditure is covered by a current budget-grant and is such that it can be discontinued in the next year's budget.

*(Part II.—Chapter II.—The Corporation.—Sections 14—17.)*

*Control by the Local Government*

Sanction of Local Government required to projects costing two and a half lakhs or over

**14.** When any project is framed by the Corporation for the execution of any work or series of works the entire estimated cost of which amounts to two and a half lakhs of rupees or more, then, notwithstanding that the cost may be included in a Budget Estimate as finally adopted under Chapter VII,—

(*a*) the work shall not be commenced until the project has been sanctioned by the Local Government, and,

(*b*) if any material change is made in the project after it has been so sanctioned, such change shall not be carried into effect unless and until it is sanctioned by the Local Government.

Power to Local Government to require returns, etc

**15.** The Local Government may require the Corporation to furnish them with—

(*a*) any return, statement, estimate, statistics or other information regarding any matter under their control,

(*b*) a report on any such matter, or

(*c*) a copy of any document in their charge.

Power to Local Government to depute officers to make inspection or examination and report

**16.** (*1*) The Local Government may depute any officer or officers to make an inspection or examination of any department, office, service, work or thing under the control of the Corporation, and to report to them the result of such inspection or examination

(*2*) Any officer so deputed may, for the purpose of making such inspection or examination, inspect the condition of any part of Calcutta, and may require the Corporation—

(*a*) to produce any record, correspondence, plan or other document which is in their possession or under their control,

(*b*) to furnish any return, plan, estimate, statement, account or statistics; or

(*c*) to furnish any report.

(*3*) Every requisition made under sub-section (*2*) shall be complied with by the Corporation without delay.

Power to Local Government to require Corporation to take action

**17.** If, on receipt of any document furnished under section 15 or any report submitted under section 16, the Local Government are of opinion that—

(*a*) any of the duties imposed by or under this Act has not been performed or has been performed in an imperfect, inefficient or unsuitable manner, or

(*b*) adequate financial provision has not been made for the performance of any such duty,

*(Part II.—Chapter II.—The Corporation.—Sections 18, 19.)*

the Local Government may, by written order, direct the Corporation within a period to be specified in the order,—

(*i*) to make arrangements to their satisfaction for the proper performance of the duties referred to in clause (*a*), or to make financial provision to their satisfaction for the performance of any such duty, as the case may be, or

(*ii*) to show cause to the satisfaction of the Local Government against the making of such arrangements or provision, as the case may be.

Procedure by Local Government where Corporation fail to take action

**18.** (*1*) If, within the period fixed by any order issued under section 17, any action directed under clause (*i*) of that section has not been duly taken, or cause has not been shown as aforesaid, the Local Government may, by order,—

(*a*) appoint some person to take the action so directed,

(*b*) fix the remuneration to be paid to him, and

(*c*) direct that such remuneration and the cost of taking such action shall be defrayed out of the Municipal Fund and, if necessary, that the consolidated rate or other taxes authorized by Part IV shall be levied or increased, but not so as to exceed any *maximum* prescribed by that part.

(*2*) The person appointed under sub-section (*1*) may, for the purpose of taking the action directed as aforesaid, exercise any of the powers conferred by or under this Act which are specified in that behalf in the order issued under sub-section (*1*).

(*3*) The Local Government may, in addition to or instead of directing under sub-section (*1*) the levy or increase of the consolidated rate or other taxes, direct, by notification in the *Calcutta Gazette*, that any sum of money which may, in their opinion, be required for giving effect to any order issued under that sub-section be borrowed by way of debenture on the security of the said rate or all or any of the said taxes, or of both the said rate and all or any of the said taxes, at such rate of interest and upon such terms as to the time of repayment and otherwise as may be specified in the notification.

(*4*) The provisions of Chapter VIII shall apply to any loan raised in pursuance of sub-section (*3*).

Power of Local Government to annul illegal proceedings of Corporation.

**19.** The Local Government may, after consideration of any representation which may be made by the Corporation, by written order, annul any proceeding of the Corporation which they consider not to be in conformity with law or with the rules or by-laws in force thereunder, and may do all things necessary to secure such conformity.

(*Part II.*)

## CHAPTER III.

### ELECTION AND APPOINTMENT OF COUNCILLORS AND ALDERMEN

*Qualifications of Electors, Councillors and Aldermen.*

Qualifications of electors

**20.** (*1*) Subject to the provisions of any other law on the subject for the time being in force, every person shall be qualified as an elector of a general constituency specified in Schedule III who owns or occupies or resides in any premises, or exercises any profession, trade or calling, within that constituency, if such person—

(*a*) being the owner or occupier of any premises liable to be assessed to the consolidated rate under Chapter X, or being the owner or person in charge of any carriage or animal liable to the tax under Chapter XI, or being a person liable to the tax on professions, trades or callings under Chapter XII, or, in the case of the first general election held under this Act, under the corresponding chapters of the Calcutta Municipal Act, 1899,— Ben Act III of 1899

has, as such owner, occupier or person, as the case may be, paid directly to the Corporation a sum not less than twelve rupees in respect of such consolidated rate, or in respect of such taxes, or in respect of both such rate and taxes:

Provided that the name of the person by whom such payment or any portion thereof has been made, appears in the assessment book in respect of the premises on account of which such payment or portion thereof has been made.

Provided also that such payment shall be made in respect of the half-year from the first day of April to the 30th day of September last preceding the preparation of the electoral roll:

Provided also that for the purposes of clause (*a*) the members of the Auxiliary Force who are exempted by the Corporation from paying the tax on horses used for the force shall be considered to have paid such tax; or

(*b*) being the occupier of any premises or a portion of any premises valued for assessment purposes under this Act has at any time during the year in which the election takes place, but not later than

*(Part II.—Chapter III.—Election and appointment of Councillors and Aldermen.—Section 21.)*

the 30th of September immediately preceding the election, paid rent at a rate not less than twenty-five rupees *per mensem* for such occupancy for the half-year from the 1st April to the 30th day of September and has applied to the Executive Officer to have his name entered in the register to be maintained by the Executive Officer for the purpose and such application has been granted; or,

(*c*) being the owner of a hut in a *bustee* valued for assessment purposes under Chapter X and on account of which a sum not less than twelve rupees has been paid during the year ending with the 30th September in respect of an entire consolidated rate, has applied to the Executive Officer to have his name entered in the register to be maintained by the Executive Officer for the purpose and such application has been granted.

(*2*) Subject to the provisions of any other law on the subject for the time being in force, a company, body corporate, firm, joint family or other association of individuals, as such, shall be qualified as an elector, provided that such company, body corporate, firm, joint family or other association of individuals possess the qualifications prescribed by clauses (*a*), (*b*) or (*c*) of sub-section (*1*).

Elections in area added to Calcutta before the second general election

**21.** (*1*) Subject to the provisions of any other law on the subject for the time being in force and notwithstanding anything to the contrary contained in section 20,—

(*i*) in any area which was included within the Maniktala Municipality or the Cossipur-Chitpur Municipality before the commencement of this Act and which under this Act is included in any of the constituencies mentioned in column 1 of Schedule IV—

(*a*) any person whose name was entered in the general register of voters prepared under the provisions of section 15 of the Bengal Municipal Act, 1884, and the rules made thereunder for the last election held in the said municipalities, and

Ben. Act III of 1884.

(*b*) any female person who may apply to the Executive Officer, claiming to be registered as an elector and stating her qualifications therefor, and who satisfies the Executive Officer that she possesses the qualifications prescribed in the case of males in the rules made under section 15 of the Bengal Municipal Act, 1884,

shall be deemed to be qualified as an elector for the purposes of the first general election to be held under the proviso to sub-section (*3*) of section 1, or any by-election held prior to the second general election in that

*(Part II.—Chapter III.—Election and appointment of Councillors and Aldermen—Section 21.)*

constituency, and shall have the rights and be subject to the disabilities of an elector under this Act;

(*ii*) in any area added to Calcutta which was included within the South Suburban Municipality before the commencement of this Act, and which under this Act is included in any of the constituencies mentioned in column 1 of Schedule IV—

(*a*) any person whose name was entered in the general register of voters prepared under the provisions of section 15 of the Bengal Municipal Act, 1884, and the rules made thereunder, for the last election held in the South Suburban Municipality, so far as the names in the said general register relate to the area added to Calcutta, and — Ben Act III of 1884

(*b*) any female person who may apply to the Executive Officer claiming to be registered as an elector and stating her qualifications therefor, and who satisfies the Executive Officer that she possesses the qualifications prescribed in the case of males in the rules made under section 15 of the Bengal Municipal Act, 1884,

if his or her qualifications arose by virtue of rates paid on account of a holding lying within (or his or her occupation of a holding within) the said area, shall be entitled to vote at the first general election referred to in this sub-section or any by-election in the said constituency held prior to the second general election in that constituency, and shall have the rights and be subject to the disabilities of an elector under this Act; and

(*iii*) in any area added to Calcutta which was included in the Garden Reach Municipality before the commencement of this Act and which under this Act is included in any of the constituencies mentioned in column 1 of Schedule IV—

any male or female person who may apply to the Executive Officer claiming to be registered as an elector and stating his or her qualifications therefor, and who satisfies the Executive Officer that he or she possesses the qualifications prescribed in the case of males in the rules made under section 15 of the Bengal Municipal Act, 1884, shall be entitled to vote at the first general election referred to in this sub-section or any by-election in the said constituency held prior to the second general election in that constituency and shall have the

*(Part II.—Chapter III.—Election and appointment of Councillors and Aldermen.—Section 22.)*

rights and be subject to the disabilities of an elector under this Act.

(2) The electoral rolls for the constituencies in which such areas are included shall be prepared so as to comprise the names of the male and female persons who may be found to be qualified as electors under the provisions of sub-section (1) in respect of the areas referred to in that sub-section, subject to the provisions of section 25 and the rules made thereunder, so far as may be necessary, in respect of all claims and objections to the entry of such names in the electoral rolls.

(3) Any person entitled to vote under this section shall be deemed to be registered on the electoral roll of the Corporation and, subject to the provisions of this chapter, to be eligible for election as a Councillor.

(4) The Local Government may issue such orders as they may consider necessary to give effect to the provisions of this section in regard to the holding of the first general election or any by-election of any constituency referred to in sub-section (1) and in regard to any matters incidental or ancillary thereto.

General disqualifications for being a Councillor or Alderman

**22.** (1) A person shall not be eligible for election or appointment as a Councillor or for election as an Alderman if such person—

(a) has been adjudged by a competent court to be of unsound mind; or

(b) is under twenty-one years of age, or

(c) is an undischarged insolvent; or

(d) being a discharged insolvent, has not obtained from the court a certificate that his insolvency was caused by misfortune without any misconduct on his part; or

(e) is a municipal officer or servant, or a plumber or building surveyor licensed under this Act; or

(f) is President of the Tribunal of the Board of Trustees for the Improvement of Calcutta, or an assessor to that Tribunal, or a Judge of a Court of Small Causes, or a Municipal Magistrate, or is acting in any of those capacities; or

(g) has, directly or indirectly, by himself or by his partner or employer or any employé, any share or interest in any contract or employment with, by, or on behalf of, the Corporation:

Provided as follows:—

(a) notwithstanding anything contained in clause (g), no person shall be deemed to be disqualified thereunder by reason only of his having a share or interest in—

(i) any lease, sale or purchase of land or any agreement for the same; or

(ii) any agreement for the loan of money or any security for the payment of money only; or

(iii) any newspaper in which any advertisement relating to the affairs of the Corporation is inserted; or

*(Part II.—Chapter III.—Election and appointment of Councillors and Aldermen.—Sections 23, 24.)*

(*iv*) any incorporated company which contracts with or is employed by the Corporation;

(*b*) no Councillor or Alderman who has, directly or indirectly, by himself or by his partner or employer or any employé, a share or interest in any matter or thing described in proviso (*a*), or who has acted professionally on behalf of any person having such share or interest, shall vote or take any part in any proceeding relating to that matter or thing.

(*2*) A person against whom a conviction by a criminal court for an offence involving moral turpitude and carrying with it a sentence of transportation or imprisonment for a period of more than six months is subsisting shall, unless the offence of which he was convicted has been pardoned, not be eligible for election or appointment for five years from the date of the expiration of the sentence.

(*3*) Notwithstanding anything contained in the Indian Elections Offences and Inquiries Act, 1920, if any person is convicted of an offence under Chapter IX-A of the Indian Penal Code punishable with imprisonment for a term exceeding six months or is, in the course of any proceedings under section 46, found by the High Court to have committed a corrupt practice as specified in Part I, or in paragraph 1, 2 or 3 of Part II of Schedule II, such person shall not be eligible for election or appointment for five years from the date of such conviction or of the finding of the High Court, as the case may be; and a person found by the High Court in the course of any such proceedings as aforesaid to be guilty of any other corrupt practice shall be similarly disqualified for three years from such date.

Act XXXIX of 1920

Act XLV of 1860.

(*4*) If any person has been a candidate or an election agent at an election as a Councillor under this Act and has failed to lodge any prescribed return of election expenses or has lodged a return which is found, either by the High Court in the course of any proceedings under section 46 or by a Magistrate in a judicial proceeding, to be false in any material particular, such person shall not be eligible for election for five years from the date of such election:

Provided that any disqualification mentioned in sub-sections (*2*), (*3*) or (*4*) may be removed by an order of the Local Government in that behalf.

Qualification for election as Councillor

**23.** (*1*) No person shall be eligible for election as a Councillor to represent a general constituency specified in Schedule III unless his name is duly registered on the electoral roll of that or any other general constituency specified in that schedule, and unless, in the case of a seat reserved for Muhammadans, he is himself a Muhammadan.

(*2*) No person shall be eligible for election as a Councillor to represent a special constituency specified in Schedule III unless his name is registered on the electoral roll of the constituency.

*The electoral roll.*

General conditions of registration and disqualifications

**24.** (*1*) Every person shall be entitled to have his name registered on the electoral roll of a constituency who has the qualifications specified in section 20 for an elector of that constituency and who is not

*(Part II.—Chapter III.—Election and appointment of Councillors and Aldermen—Section 24.)*

subject to any of the following disqualifications, namely :—

(*a*) has been adjudged by a competent court to be of unsound mind ; or

(*b*) is under twenty-one years of age :

Provided that the manager of a lunatic or the guardian of a minor appointed by the Court as such shall be entitled to have his name registered on the electoral roll as the representative of the lunatic or minor, if, but for the provisions of clauses (*a*) or (*b*) of sub-section (*1*) of section 22, as the case may be, such lunatic or minor would have been qualified for election.

(*2*) A company, body corporate, firm, joint family or other association of individuals, as such, shall not be registered in its own name in the electoral roll, but if qualified as an elector, may obtain the registration of the name of one of its members, as its representative on such roll.

(*3*) A person shall be entitled to have his name registered only once on the electoral roll of any constituency notwithstanding that he may possess more than one qualification :

Provided that a person who is registered as the representative of any company, body corporate, firm, joint family or other association of individuals under sub-section (*2*) or as the manager of a lunatic or the guardian of a minor shall not therefore be ineligible for registration in his individual capacity on the same electoral roll.

(*4*) Chamber members of the Bengal Chamber of Commerce, members of the Calcutta Trades Association, and Commissioners for the Port of Calcutta shall be qualified respectively as electors for the constituency comprising the Chamber, or Association or Trust of which they are such members.

*Explanation*—(*a*) "Chamber member" includes any person entitled to exercise the rights and privileges of Chamber membership on behalf of any firm, company, or other corporate body registered as such member.

(*b*) "Member" includes—

(*i*) in the case of a firm, any one partner in the firm or, if no such partner is present in Calcutta at the date fixed for the election, any one person empowered to sign for such firm, and

(*ii*) in the case of a company or other corporate body, any one manager, director, or secretary of the company or corporate body.

(*5*) If any person is convicted of an offence under Chapter IX-A of the Indian Penal Code punishable with imprisonment for a term exceeding six months or is, in the course of any proceedings under section 46, found by the High Court to have committed a corrupt practice as specified in Part I, or in paragraph 1, 2 or 3 of Part II of Schedule II, his name, if on the electoral roll, shall be removed therefrom and shall not be registered thereon for a period of five years from the date of the conviction or the report, as the case may be, or, if not on the electoral roll, shall not be so registered for a like period ; and if any person is, in the course of such proceedings as aforesaid, found by the High Court to have committed any other corrupt practice, his name, if on the electoral roll, shall be removed therefrom and shall not be

Act XLV of 1860

*(Part II.—Chapter III.—Election and appointment of Councillors and Aldermen.—Section 25.)*

registered thereon for a period of three years from the date of the report or, if not on the electoral roll, shall not be so registered for a like period:

Provided that the Local Government may direct that the name of any person to whom this sub-section applies shall be registered on the electoral roll.

Electoral roll

**25.** (*1*) An electoral roll shall be prepared for every constituency, on which shall be entered the names of all persons appearing to be entitled to be registered as electors for that constituency. It shall be published in the constituency together with a notice specifying the mode in which and the time within which any person whose name is not entered in the roll and who claims to have it inserted therein, or any person whose name is on the roll and who objects to the inclusion of his own name or of the name of any other person on the roll, may prefer a claim or objection to the revising authority.

(*2*) Subject to the provisions of this Act, the Local Government shall make rules providing for—

(*a*) the authority by whom the electoral roll shall be prepared and the particulars to be contained in the roll;

(*b*) the time at which the roll shall be prepared;

(*c*) the publication of the roll in such manner and in such language as to give it wide publicity in the constituency to which it relates;

(*d*) the mode in which and the time within which claims and objections may be preferred;

(*e*) the constitution and appointment of revising authorities to dispose of claims and objections;

(*f*) the manner in which notices of claims or objections shall be published;

(*g*) the place, date, and time at which and the manner in which claims or objections shall be heard;

and may make such rules to provide for other matters incidental or ancillary to the preparation, revision, publication and regular maintenance of the roll as they may consider desirable. Such rules may be made as to rolls generally or any class of rolls or any particular roll.

(*3*) The orders made by the revising authority shall be final, and the electoral roll shall be amended in accordance therewith and shall, as so amended, be republished in such manner as the Local Government may prescribe.

(*4*) The electoral roll shall come into force from the date of such republication, and shall continue in force for a period of three years or for such less period as the Local Government may by rule prescribe, and after the expiration of such period a fresh roll shall be prepared.

(*5*) If a constituency is called upon to elect a Councillor or Councillors after an electoral roll has ceased to have force and before the completion of the new electoral roll, the old electoral roll shall for the purposes of that election continue to operate as the electoral roll for the constituency.

*(Part II.—Chapter III.—Election and appointment of Councillors and Aldermen.—Sections 26—29.)*

Right to vote

**26.** Every person registered on the electoral roll for the time being in force for any constituency shall while so registered be entitled to vote at an election of a Councillor or Councillors for that constituency.

*Elections.*

Nomination of candidates

**27.** (*1*) Any person may be nominated as a candidate for election as a Councillor for any constituency for which he is eligible for election under this Act.

(*2*) On or before the date on which a candidate is nominated the candidate shall make in writing and sign a declaration appointing either himself or some other person who is not disqualified under section 32 for the appointment to be his election agent, and no candidate shall be deemed to be duly nominated unless such declaration has been made.

(*3*) A candidate who has been duly nominated shall within three days of his nomination deposit with the Executive Officer two hundred and fifty rupees which shall be liable to forfeiture if he withdraws his candidature within seven days of the date fixed for the election or if he fails to secure at the election at least ten *per cent.* of the votes cast. Failure to deposit the said amount shall render the nomination void.

(*4*) A candidate who has withdrawn his candidature shall not be allowed to cancel the withdrawal or to be renominated as a candidate for the same election.

Uncontested elections

**28.** (*1*) In any constituency in which one or more seats are reserved for Muhammadans, the following candidates, provided they are duly nominated, and have not withdrawn their candidature, shall be declared to be duly elected, that is to say:—

(*a*) if the number of Muhammadan candidates is not greater than the number of Muhammadan Councillors to be elected—all such Muhammadan candidates;

(*b*) if the number of Muhammadan candidates is not less than the number of Muhammadan Councillors to be elected, and the total number of candidates, Muhammadan and non-Muhammadan, does not exceed the number of Councillors to be elected for the constituency—all such Muhammadan and non-Muhammadan candidates:

Provided that, if in any case referred to in clause (*a*) the number of non-Muhammadan candidates does not exceed the number of vacant seats not reserved for Muhammadans, all such non-Muhammadan candidates shall also be declared to be duly elected.

(*2*) In any constituency in which seats are not reserved for Muhammadans, if the number of candidates who are duly nominated, and have not withdrawn their candidature, is not more than the number of Councillors to be elected for such constituency, all such candidates shall be declared to be duly elected.

Procedure at election

**29.** (*1*) In any case not provided for in section 28, a poll shall be taken.

(*2*) Votes shall be given by ballot and in person. No votes shall be received by proxy.

*(Part II.—Chapter III.—Election and appointment of Councillors and Aldermen.—Section 30.)*

(3) No votes shall be given either by the Government or by the Corporation.

(4) In plural-Councillor constituencies every elector shall have as many votes as there are Councillors to be elected, but no elector shall give more than one vote to any one candidate.

(5) Votes shall be counted by or under the supervision of the returning officer, and any candidate, or, in the absence of the candidate, a representative duly authorized by him in writing, shall have a right to be present at the time of counting.

(6) When the counting of the votes has been completed, the returning officer shall forthwith declare the candidate or candidates, as the case may be, to whom the largest number of votes has been given to be elected.

(7) Where an equality of votes is found to exist between any candidates and the addition of one vote will entitle any of the candidates to be declared elected, the determination of the person or persons to whom such one additional vote shall be deemed to have been given shall be made by lot to be drawn in the presence of the returning officer and the candidates and in such manner as he may determine.

(8) The returning officer shall without delay report the result of the election to the Executive Officer, and the name or names of the candidate or candidates elected shall be published in the *Calcutta Gazette.*

Local Government to make rules regarding the conduct of election

**30.** (1) Subject to the provisions of this Act the Local Government shall make rules providing—

(a) for the form and manner in, and the conditions on, which nominations may be made, and for the scrutiny of nominations;

(b) for the appointment of a returning officer for each constituency and for his powers and duties;

(c) for the appointment of polling stations for each constituency;

(d) for the appointment of officers to preside at polling stations, and for the duties of such officers;

(e) for the checking of voters by reference to the electoral roll;

(f) for the manner in which votes are to be given, and in particular for the case of illiterate voters, or voters under physical or other disability;

(g) for the procedure to be followed in respect of tender of votes by persons representing themselves to be electors after other persons have voted as such electors;

(h) for the scrutiny of votes;

(i) for the safe custody of ballot papers and other election papers, for the period for which such papers shall be preserved, and for the inspection and production of such papers;

and may make such other rules regarding the conduct of elections as they think fit.

*(Part II.—Chapter III.—Election and appointment of Councillors and Aldermen.—Sections 31—34.)*

(2) In the exercise of the foregoing power rules may be made as to elections generally or any class of elections or in regard to constituencies generally or any class of constituency or any particular constituency.

Multiple elections

**31.** (1) If any person is elected by more than one constituency, he shall, by notice in writing signed by him and delivered to the Executive Officer, within seven days from the date of the publication of the result of such election in the *Calcutta Gazette*, choose for which of those constituencies he shall serve, and the choice shall be conclusive.

(2) When any such choice has been made, the Executive Officer shall call upon the constituency or constituencies for which such person has not chosen to serve to elect another person or persons.

(3) If the candidate does not make the choice referred to in sub-section (1), the Executive Officer shall forthwith declare the constituency for which such person shall serve and shall call upon the other constituency or constituencies concerned to elect another person or persons.

Disqualification for being election agent.

**32.** No person shall be appointed an election agent who is himself ineligible for election as being subject to any disqualification mentioned in section 22.

Revocation of appointment of election agent.

**33.** (1) The appointment of an election agent, whether the election agent appointed be the candidate himself or not, may only be revoked in writing signed by the candidate and lodged with the officer receiving nominations and shall operate from the date on which it is so lodged.

(2) In the event of such a revocation or of the death of any election agent, whether such event occurs before, during or within one month, or such longer period as the Local Government may allow, after the election, then the candidate shall appoint forthwith another election agent and declare his name in writing to the said officer.

Return of election expenses.

**34.** (1) Within one month or such longer period as the Local Government may allow after the date of the declaration of the election every candidate, either personally or through his election agent, shall cause to be lodged with the Executive Officer a return of his election expenses containing the particulars specified in Schedule V.

(2) Every such return shall contain a statement of all payments made by the candidate or by his election agent or by any persons authorized by the candidate to act on his behalf for expenses incurred on account of, or in respect of, the conduct and management of the election, and further a statement of all unpaid claims in respect of such expenses of which he or his election agent is aware.

(3) The return shall be accompanied by declarations by the candidate and his election agent which shall be in the form contained in Schedule V and shall be made on oath or affirmation before a Magistrate.

*(Part II.—Chapter III.—Election and appointment of Councillors and Aldermen.—Sections 35—39.)*

(4) The Executive Officer shall cause to be prepared and maintained a record showing the names of all candidates at every election of a Councillor under this Act and the date on which the return of election expenses of each candidate has been lodged with him.

Accounts of agents

**35.** Every election agent shall keep regular books of account in which the particulars of all expenditure of the nature referred to in section 34 shall be entered, whether such expenditure is incurred by the candidate or by the election agent or by any person under the direction of the candidate or the election agent.

Appointment by Local Government to make up the prescribed number

**36.** If there is not a sufficient number of valid nominations for an election in any constituency or if the electors of any constituency do not elect the prescribed number of Councillors, the Local Government shall appoint as many Councillors as may be necessary to make up the prescribed number

Appointment of Councillors when to be made

**37.** Before the date fixed for the first meeting of the Corporation after a general election, the Local Government shall, by notification in the *Calcutta Gazette*, make such appointments of Councillors as may be necessary under clause (*b*) of section 5 or under section 36.

Oath of allegiance to be taken by Councillors and Aldermen

**38.** (*1*) Notwithstanding anything contained in the Indian Oaths Act, 1873, every person who is elected or appointed to be a Councillor or elected an Alderman shall before taking his seat make, at a meeting of the Corporation, an oath or affirmation of his allegiance to the Crown in the following form, namely:— X of 1873

"I. A. B., having been elected a Councillor / appointed an Alderman of the Corporation do solemnly swear (or affirm) that I will be faithful and bear true allegiance to His Majesty the King-Emperor of India, His heirs and successors, and that I will faithfully discharge the duties upon which I am about to enter."

(*2*) Any person who having been elected or appointed to be a Councillor or elected an Alderman fails to make within three months of the date on which his term of office commences, the oath or affirmation laid down in sub-section (*1*) shall cease to hold his office and his seat shall be deemed to have become vacant.

*Explanation.*—A person who by constitutional means endeavours to make changes in the constitution shall not be deemed to have thereby violated his oath of allegiance.

Term of office of Councillors and Aldermen.

**39.** Subject to the provisions of section 43, an elected Councillor or Alderman shall hold office for a term of three years; and an appointed Councillor shall hold office for a term of three years or for such shorter period as the Local Government may, at the time of appointment, determine. The said term of three years shall commence from the date of the first meeting of the Corporation fixed under section 59 at which a quorum is present and shall be held to include any period which may elapse between the expiry of the said term of three years and the date of

*(Part II.—Chapter III.—Election and appointment of Councillors and Aldermen.—Sections 40—43.)*

the first meeting of the Corporation fixed under section 59 after a general election at which meeting a quorum is present

Provided that the said period may be extended by the Local Government for a period not exceeding one year, by notification in the *Calcutta Gazette*, if in special circumstances (to be specified in the notification) they so think fit.

Resignation of Councillors or Aldermen

**40.** A Councillor or an Alderman may resign his office by notifying in writing his intention to do so, to the Mayor and on the acceptance of the resignation by the Corporation his seat shall become vacant.

Effect of subsequent disabilities

**41.** If any person having been elected or appointed a Councillor, or elected an Alderman—

(*a*) subsequently becomes subject to any of the disabilities stated in clauses (*a*), (*c*), (*d*), (*e*), (*f*) or (*g*) of sub-section (*1*) or in sub-sections (*2*), (*3*) or (*4*) of section 22, or

(*b*) is declared by the Local Government, by notification in the *Calcutta Gazette*, (issued after due inquiry in which the Councillor or Alderman concerned shall have a right to be heard) to have violated his oath of allegiance, or

(*c*) absents himself during six consecutive months from the meetings of the Corporation, except from temporary illness or other cause which the Corporation may consider sufficient to justify such absence, or

(*d*) is retained or employed in any professional capacity in connection with any case or matter to which the Corporation is a party,

such person shall cease to be a Councillor or an Alderman, and the Local Government shall, by notification in the *Calcutta Gazette*, declare his seat to be vacant.

*Explanation*—The expression "retained or employed in a professional capacity" shall be deemed to include appearance in any professional capacity before the Corporation or any of its Committees or before any officer of the Corporation in any matter to which the Corporation is a party.

Removal of Councillor or Alderman

**42.** The Local Government may, if they think fit, on the recommendation of the Corporation, made after due inquiry in which the Councillor or Alderman concerned shall have the right to be heard, remove any Councillor or Alderman elected or appointed under this Act, if such Councillor or Alderman has been guilty of misconduct in the discharge of his duties or of any disgraceful conduct.

Casual vacancies.

**43.** (*1*) When a vacancy occurs in the case of an elected Councillor or of an Alderman by reason of his seat becoming vacant under the provisions of section 38, or by reason of a declaration made under section 41, or of his election being declared void, or by his death, resignation duly accepted, or removal, the Executive Officer shall call upon the constituency concerned or the Councillors, as the

*(Part II.—Chapter III.—Election and appointment of Councillors and Aldermen—Sections 44—46.)*

case may be, to elect a person for the purpose of filling the vacancy within such time as may be prescribed.

(2) If a vacancy occurs in the case of an appointed Councillor, the Local Government shall appoint to the vacancy a person having the necessary qualifications.

(3) Every such person shall remain a Councillor or Alderman for the residue of the term of office of the Councillor or Alderman in whose stead he was elected or appointed.

Power of Local Government in respect of first election.

**44.** If any difficulty arises as to the preparation or publication of the first electoral rolls or the holding of the first elections the Local Government may by order authorize any matter or thing to be done which appears to them necessary for the proper preparation or publication of the rolls or for the proper holding of the elections.

General elections

**45.** (1) Before the expiration of the term of office of the Councillors and Aldermen under section 39, a general election of Councillors shall be held.

(2) Such general elections shall take place triennially on a date to be fixed by the Local Government ordinarily in the month of March, or on a date in such other month as the Local Government may fix.

(3) Such elections shall be so fixed as to take place simultaneously in all the constituencies.

(4) The Local Government shall, by notification in the *Calcutta Gazette*, call upon the constituencies referred to in Schedule III to elect Councillors in accordance with this Act within such time as may be prescribed by such notification:

Provided that, if the Local Government think fit, such notification may be issued at any time not being less than three months prior to the date on which the term of office of the Councillors and Aldermen would expire in the ordinary course of events.

*Disputes as to the validity of an election.*

Hearing of election petitions by High Court

**46.** (1) If there is any dispute as to whether any person whose name is published under sub-section (8) of section 29 is qualified to be elected a Councillor, or if the validity of any election is questioned, whether by reason of the commission of any corrupt practice by a candidate or his agent or by any other person or by reason of the improper rejection of a nomination or of the improper reception or refusal of a vote, or for any other cause, any person enrolled in the electoral roll may, at any time within eight days after the said publication, apply to the High Court:

Provided that no election shall be called in question on the ground that—

(a) the name of any person qualified to vote has been omitted from the electoral roll, or

(b) the name of any person not qualified to vote has been inserted in that roll, or

(c) any direction given by any rule made under section 25, sub-section (2), or section 30 has not been obeyed.

*(Part II.—Chapter III.—Election and appointment of Councillors and Aldermen.—Section 47.)*

(2) If the Court sets aside an election or declares an election to be null and void, a fresh election shall be held.

(3) Every election not called in question in accordance with the provisions of this section shall be deemed to have been to all intents a good and valid election.

Grounds for declaring election void.

**47.** (1) Save as hereinafter provided in this section, if, in any proceeding duly instituted under section 46, the High Court is of opinion that—

(a) the election of a returned candidate has been procured or induced, or the result of the election has been materially affected, by a corrupt practice, or

(b) any corrupt practice specified in Part I of Schedule II has been committed, or

(c) the result of the election has been materially affected by any irregularity in respect of a nomination paper, or by the improper reception or refusal of a vote, or, save as is provided in section 46, by any non-compliance with the provisions of this Act or the rules made thereunder, or by any mistake in the use of any form annexed thereto,

the election of the returned candidate shall be void.

(2) If in such proceeding the Court is of opinion that a returned candidate has been guilty by an agent (other than his election agent) or any other person of any corrupt practice specified in Part I of Schedule II which does not amount to any form of bribery other than treating as hereinafter explained or to the procuring or abetment of personation, and if the Court is also of opinion that the candidate has satisfied it that—

(a) no corrupt practice was committed at such election by the candidate or his election agent, and the corrupt practices mentioned in the report were committed contrary to the orders and without the sanction or connivance of such candidate or his election agent, and

(b) such candidate and his election agent took all reasonable means for preventing the commission of corrupt practices at such election, and

(c) the corrupt practices mentioned in the said report were of a trivial, unimportant and limited character, and

(d) in all other respects the election was free from any corrupt practice on the part of such candidate or any of his agents,

then the Court may find that the election of such candidate is not void.

*Explanation.*—For the purposes of this sub-section "treating" means the incurring in whole or in part by any person of the expense of giving or providing any food, drink, entertainment or provision to any person with the object, directly or indirectly, of inducing him or any other person to vote or refrain from voting or as a reward for having voted or refrained from voting.

*(Part II.—Chapter III.—Election and appointment of Councillors and Alderman.—Sections 48, 49.)*

Operation of transitory provisions

**48.** The provisions of this Act relating to elections of Councillors by general electorates are subject to the provisions of sections 49 and 50.

Transitory provisions to have effect at elections prior to the fourth general election

**49.** (*1*) Notwithstanding anything contained elsewhere in this Act, the provisions of this section shall apply in respect of the election of Councillors at the first three general elections, held under this Act or in the manner provided therein, and at any by-election held prior to the fourth general election.

(*2*) Subject to the provisions of any other law for the time being in force every Muhammadan shall be qualified as an elector of a Muhammadan constituency specified in Schedule IV, who owns or occupies or resides in any premises, or exercises any profession, trade or calling, within that constituency, if such person possesses the qualification set forth in clause (*a*), clause (*b*) or clause (*c*) of sub-section (*1*) of section 20.

(*3*) No person shall be eligible for election as a Councillor to represent a Muhammadan constituency unless his name is duly registered in the electoral roll of that or any other Muhammadan constituency.

(*4*) In the case of the elections referred to in sub-section (*1*)—

(*a*) for section 8 the following shall be deemed to be substituted, namely:—

Constituencies

"8. The elected Councillors shall be elected by the constituencies specified in Schedule IV, and the number of Councillors to be elected by each constituency shall be as stated therein against that constituency."

(*b*) for that portion of sub-section (*1*) of section 20 beginning with the figure and words "(*1*) Subject to" and ending with the words "specified in Schedule III", the following shall be deemed to be substituted, namely:—

"(*1*) Subject to the provisions of any other law on the subject for the time being in force, every person, other than a Muhammadan, shall be qualified as an elector of a non-Muhammadan constituency specified in Schedule IV",

(*c*) for section 23 the following shall be deemed to be substituted, namely:—

Qualification for election as a Councillor

"23. (*1*) No person shall be eligible for election as a Councillor to represent a non-Muhammadan constituency specified in Schedule IV, unless his name is duly registered on the electoral roll of that or any other non-Muhammadan constituency specified in that schedule.

*(Part II.—Chapter III.—Election and apppointment of Councillors and Alderman.—Section 50.)*

(2) No person shall be eligible for election as a Councillor to represent a special constituency specified in Schedule IV, unless his name is registered on the electoral roll of that constituency."

(*d*) in sub-section (*1*) of section 24 for the words and figures "specified in section 20" the word "prescribed" shall be deemed to be substituted,

(*e*) to sub-section (*2*) of section 24 the following shall be deemed to be added, namely :—

"and notwithstanding anything contained elsewhere in this Act the electoral roll on which such representative shall be entitled to be registered shall be the electoral roll of the non-Muhammadan or Muhammadan constituency, as the case may be, for the electoral area in respect of which such company or other association is entitled to be an elector, according as such representative is or is not a Muhammadan."

(*f*) for section 28 the following shall be deemed to be substituted, namely :—

Uncontested elections

"28. In any constituency, if the number of candidates, who are duly nominated, and have not withdrawn their candidature, is not more than the number of Councillors to be elected for that constituency, all such candidates shall be declared to be duly elected."

(*g*) in sub-section (*4*) of section 45 for the word and figures "Schedule III" the word and figures "Schedule IV" shall be deemed to be substituted,

(*h*) in sub-section (*2*) of section 483 after the words "of Councillors" in the first place where they occur the words "by non-Muhammadan and Muhammadan constituencies" shall be deemed to be inserted and for the word and figures "Schedule III" the word and figures "Schedule IV" shall be deemed to be substituted.

(*5*) The provisions of other sections applying to the election of Councillors by, and the electoral roll of, general constituencies shall apply so far as may be necessary to the election of Councillors by, and the electoral roll of, the non-Muhammadan and Muhammadan constituencies.

Temporary substitution of Schedule IV for Schedule III.

**50.** For the purposes of the election of Councillors during the period referred to in sub-section (*1*) of section 49, Schedule IV shall be deemed to be substituted for Schedule III.

(*Part II.*)

## CHAPTER IV.

### MUNICIPAL OFFICERS AND SERVANTS

Appointment and salary of principal officers.

**51.** (*1*) The Corporation shall appoint proper persons, for such periods respectively as they think fit, to be Chief Executive Officer, Chief Engineer, Chief Accountant, Health Officer and Secretary, and shall fix the monthly salary and allowances to be paid to the persons so appointed.

The Corporation may also appoint, for such periods as they think fit, not more than two Deputy Executive Officers, and may fix their monthly salaries and allowances.

Provided that the appointment, salary, allowances and conditions of service of the Chief Executive Officer, Chief Engineer, Health Officer and Deputy Executive Officer or officers and any action taken by the Corporation with a view to the termination of their appointment shall be subject to the approval of the Local Government.

(*2*) The Corporation may appoint such other officers and servants for such periods, respectively, as they think fit, and may fix their salaries and allowances.

Power of the Executive Officer

**52.** The Executive Officer shall be the principal executive officer of the Corporation, and all other officers and servants of the Corporation shall be subordinate to him He shall have the same right of being present at any meeting of the Corporation, or of any Standing or Special Committee, and of taking part in the discussions thereat as if he were a member of the Corporation or of such Committee, and with the consent of the Mayor or the President of the meeting, as the case may be, he may at any time make a statement or explanation of facts, but he shall not vote upon, or make, any proposition at such meeting.

Prohibition of having share or interest in contract or employment with Corporation.

**53.** (*1*) No person shall be eligible for employment as a municipal officer or servant if he has, directly or indirectly, by himself or his partner or employer or employé, any share or interest in any contract or employment with, by, or on behalf of, the Corporation.

(*2*) Every person applying for employment as a municipal officer or servant shall, if he is related by a blood relationship to, or is closely connected by marriage with, the Mayor or any Alderman or Councillor or any statutory officer of the Corporation, notify in writing such relationship or connection to the Corporation or municipal officer making such appointment, and if he fails to do so before he is appointed, his appointment to such post may at any time be terminated.

*(Part II.—Chapter IV.—Municipal officers and servants.—Sections 54—56.)*

(3) If any municipal officer or servant acquires, directly or indirectly as aforesaid, any share or interest as aforesaid, otherwise than as such officer or servant, he shall cease to be a municipal officer or servant and his office shall become vacant.

(4) Nothing in the foregoing sub-sections shall apply to any such share or interest as, under clause (*ii*) or clause (*iv*) of proviso (*a*) to section 22, it is permissible for a Councillor or an Alderman to have without being thereby disqualified for being a Councillor or an Alderman.

Indebtedness to disqualify for office under section 51

**54.** (1) No person shall be eligible for any office mentioned or referred to in section 51 if he is seriously indebted to any person.

(2) If any person holding any of the said offices becomes so indebted, the Corporation may, subject to the proviso to sub-section (1) of section 51, declare his office to be vacant.

Contribution in respect of pension or leave-allowances of Government servants appointed to be municipal officers or servants

**55.** When a servant of the Government is appointed to be a municipal officer or servant, the Corporation shall pay, out of his salary, any contribution which may for the time being be levied by the Government in respect of his pension or leave-allowances.

Power to Corporation to make rules as to furnishing security and grant of leave of absence and allowances

**56.** The Corporation, by a resolution in favour of which not less than two-thirds of the Councillors and Aldermen voting have voted, may make rules—

(*a*) fixing the amount and nature of the security to be furnished by any municipal officer or servant from whom it may be deemed expedient to require security;

(*b*) regulating the grant of leave of absence, allowances, pensions, bonuses and gratuities to municipal officers and servants;

(*c*) regulating the grant of compassionate allowances and gratuities to members of the families of deceased municipal officers and servants;

(*d*) for establishing and maintaining a provident or annuity fund, and for compelling all or any of the municipal officers or servants to contribute to such fund, and for making supplementary contributions out of the municipal fund; and

(*e*) for establishing and aiding in the establishment and maintenance of co-operative societies for the menials of the Corporation:

*(Part II.—Chapter IV.—Municipal officers and servants.—Section 57.)*

Provided that no pension, gratuity or compassionate allowance referred to in clauses (*b*) and (*c*) shall, save with the special sanction of the Local Government, exceed the sum to which under any general or special orders of the Government of India for the time being in force, such officer or servant or his family would be entitled if the service had been service under Government:

Provided also that the municipal officers and servants who were formerly in the Plague Department of the Local Government shall be entitled to the benefits of the aforesaid provident or annuity fund and gratuities in respect of the period of their services in that department on their paying within six months from the commencement of this Act their share of contribution to the said fund for the said period in accordance with the rules hitherto in force

Grant of pensions, gratuities, and compassionate allowances

**57.** (*1*) The Corporation may, in accordance with the rules made under section 56, grant—

(*a*) pensions, allowances, bonuses and gratuities to municipal officers and servants, and

(*b*) compassionate allowances and gratuities to members of the families of deceased municipal officers and servants,

and may also supplement contributions to a Provident Fund in accordance with the said rules

(*2*) For the purposes of this chapter the family of a municipal officer or servant shall be deemed to include his wife, his children, and his father, mother, brother or sister, dependent upon him for support.

(*Part II.*)

## CHAPTER V.

### CONDUCT OF BUSINESS.

*Transaction of business by the Corporation.*

Meetings.

**58.** (*1*) The Corporation shall meet not less than once a month for the transaction of business.

(*2*) The Mayor or, in his absence, the Deputy Mayor may, whenever he thinks fit, and shall, upon a requisition made in writing by any ten Councillors or Aldermen, call a meeting of the Corporation.

First meeting after general election

**59.** The first meeting of the Corporation after a general election of Councillors shall be held as early as conveniently may be in the month of April next following such election and shall be convened by the Executive Officer.

Notice of meetings and business

**60.** A list of the business to be transacted at every meeting shall be sent to the address of each Councillor and Alderman resident in Calcutta, so that it may be in his hands not less than forty-eight hours before the time fixed for such meeting; and no business shall be brought before, or transacted at, any meeting other than the business of which notice has been so given:

Provided that any Councillor or Alderman may submit to a meeting any resolution going beyond the matters mentioned in the notice given of such meeting, if he has given not less than forty-eight hours' previous notice of his intention so to do, by leaving a copy of such resolution at the Municipal Office.

Vote of majority decisive

**61.** All acts authorized or required to be done by the Corporation, and all questions which may come before the Corporation for decision, shall, save as is in this Act otherwise provided, be respectively done and decided by a majority of the Councillors and Aldermen voting at the meeting before which the matter is brought.

President at meeting

**62.** (*1*) The Mayor, or, in his absence, the Deputy Mayor shall preside at every meeting of the Corporation, and shall have a second or casting vote in all cases of equality of votes.

*(Part II.—Chapter V.—Conduct of business—Sections 63—67.)*

(2) In the absence of the Mayor and Deputy Mayor, the Councillors and Aldermen present at any meeting shall choose one of their number to preside, who shall in case of equality of votes have a second or casting vote.

(3) The President of any meeting at which a quorum of the Councillors and Aldermen is present may, with the consent of a majority of the members present, adjourn the meeting from time to time and from place to place.

Quorum

**63.** No business shall be transacted at any meeting unless a quorum of twenty members be present throughout the meeting:

Provided that, if at any meeting there is not a sufficient number of members present to form a quorum, the President of such meeting shall adjourn the meeting to such convenient time and place as he thinks fit, and the business which should have been brought before the original meeting, if there had been a quorum present, shall be brought forward and disposed of in the usual manner at the adjourned meeting, at which a quorum of fifteen members shall suffice.

Declaration by President that a resolution has been carried or lost

**64.** At any meeting, unless a poll be demanded by at least five members, a declaration by the President of such meeting that a resolution has been carried or lost, and an entry to that effect in the minutes of proceedings shall, for the purposes of this Act, be conclusive evidence of the fact, without proof of the number or proportion of the votes recorded in favour of or against such resolution.

Poll and ballot

**65.** If a poll be demanded under section 64, the votes of all the members present who desire to vote shall be taken under the direction of the President of the meeting, and the result of such poll shall be deemed to be the resolution of the Corporation at such meeting:

Provided that the Corporation may, subject to such rules as may be made by them under section 66, resolve that any question or class of questions shall be decided by ballot.

Power to Corporation to make rules

**66.** The Corporation may make rules for the conduct of business at their meetings.

*Contracts and Seal of Corporation.*

Execution of contracts by the Mayor or Deputy Mayor on behalf of the Corporation

**67.** (1) The Corporation may enter into and perform all such contracts as they may consider necessary or expedient for carrying into effect the provisions of this Act.

(2) With respect to the making of such contracts the following provisions shall have effect, namely:—

(a) every such contract shall be made on behalf of the Corporation by the Mayor or Deputy Mayor;

(b) no contract shall be made by the Mayor or Deputy Mayor unless the same is previously sanctioned by the Corporation;

*(Part II.—Chapter V.—Conduct of business.—Sections 68, 69.)*

(c) no contract involving an expenditure exceeding two and a half lakhs of rupees shall be made by the Mayor or Deputy Mayor unless the same is previously sanctioned by the Corporation and the Local Government

(3) The foregoing provisions of this section shall apply to every variation or discharge of a contract as well as to an original contract

Further provisions as to execution of contracts, and provisions as to seal of Corporation.

**68.** (1) Every contract made by the Mayor or Deputy Mayor on behalf of the Corporation shall be entered into in such manner and form as would bind the Mayor or Deputy Mayor if such contract were made on his own behalf, except that the common seal of the Corporation shall be used (where necessary); and every such contract may in the like manner and form be varied or discharged.

(2) Every contract for the execution of any work or the supply of any materials or goods which will involve an expenditure exceeding one thousand rupees shall be in writing, shall be sealed, and shall specify—

(a) the work to be done or the materials or goods to be supplied, as the case may be,

(b) the price to be paid for such work, materials or goods, and

(c) the time or times within which the contract or specified portions thereof shall be carried out.

(3) The common seal of the Corporation shall remain in the custody of the Secretary to the Corporation, and shall not be affixed to any contract or other instrument except in the presence of a Councillor or an Alderman, who shall attach his signature to the contract or instrument in token that the same was sealed in his presence.

(4) The signature of the said Councillor or Alderman shall be distinct from the signature of any witness to the execution of such contract or instrument

(5) A contract not executed as provided in this section shall not be binding on the Corporation.

Tenders

**69.** (1) Not less than seven days before the Corporation enter into any contract for the execution of any work or the supply of any materials or goods which will involve an expenditure exceeding one thousand rupees, they shall give notice by advertisement in local newspapers inviting tenders for such contract.

(2) In every case in which the acceptance of a tender would involve an expenditure exceeding one thousand rupees, the specifications, conditions and estimates, and all the tenders received shall be placed before the Corporation.

(3) In every case in which the acceptance of a tender would involve an expenditure exceeding two and a half lakhs of rupees, the Corporation shall

*(Part II.—Chapter V.—Conduct of business.—Sections 70, 71.)*

submit to the Local Government the specifications, conditions and estimates, and all the tenders received, specifying the particular tender (if any) which they recommend for acceptance.

(4) The Corporation, or the Local Government, as the case may be, may reject all or any of the tenders made under the provisions of this section

(5) Notwithstanding anything contained in this section, the Corporation, by a resolution in favour of which not less than two-thirds of the Councillors and Aldermen voting have voted, may, for reasons which shall be recorded in their proceedings, enter into a contract involving an expenditure not exceeding five thousand rupees without inviting tenders or without the acceptance of any tender which may have been received

Security for performance of contract

**70.** The Corporation shall take sufficient security for the due performance of every contract into which they enter under this Act

*Standing Committees.*

Standing Committees

**71.** (1) The Corporation may each year appoint Standing Committees and, by specific resolution, delegate any of their functions, powers or duties to such Committees, and may also from time to time, by a like resolution, refer to them for inquiry and report, or for opinion, such subjects relating to the functions, powers or duties of the Corporation as the Corporation may think fit.

(2) A Standing Committee shall not consist of more than twelve members, and no Councillor or Alderman shall, at the same time, be a member of more than two Standing Committees and the District Committee

(3) Every Standing Committee shall conform to any instructions that may from time to time be given to them by the Corporation

(4) The Corporation may at any time dissolve, or subject to the provisions of sub-section (2), alter the constitution of any Standing Committee, and may also at any time withdraw from any Standing Committee any of the functions, powers or duties delegated to them under sub-section (1)

(5) Every Standing Committee shall appoint two of their number to be their Chairman and Deputy Chairman:

Provided that no Councillor or Alderman shall, at the same time, be the Chairman or Deputy Chairman of more than one Standing Committee.

(6) In the absence of the Chairman or Deputy Chairman, the members of the Standing Committee present shall choose one of their number to preside over their meeting.

(7) When any matter is referred to a Standing Committee, the Corporation may fix a time within which the report of the Standing Committee thereon is to be submitted to the Corporation.

*(Part II.—Chapter V.—Conduct of business.—Sections 72—74.)*

(8) All the proceedings of every Standing Committee shall be subject to confirmation or revision by the Corporation.

Provided that, if, in delegating any of their functions, powers or duties to a Standing Committee under sub-section (1), the Corporation direct that the decision of the Standing Committee shall be final, then so much of the proceedings of the Standing Committee as relate to such functions, powers or duties shall not be subject to confirmation by the Corporation.

(9) The Corporation may make rules for regulating the conduct of business at meetings of Standing Committees and of Sub-committees appointed by them.

District Standing Committees

**72.** (1) The Corporation may from time to time divide Calcutta into such districts consisting of different wards as they may think fit and appoint a Standing Committee, to be called the District Committee, for each such district and delegate to such Committees such functions, powers or duties of the Corporation as the Corporation may think fit relating to matters affecting their respective districts, and may also from time to time, by specific resolution, refer to them for inquiry and report or for opinion such matters relating to such districts as the Corporation may think fit.

(2) Each such District Committee shall consist of all the Councillors for the several constituencies comprised in each district and any Alderman or other Councillor living within the district and expressing his willingness to serve on such Committee.

(3) The District Committee shall associate with themselves not more than three persons, residing within such district. Such persons shall be elected by the Committee every year in such manner as may be prescribed by rules made by the Corporation in this behalf. Such associated members shall hold office for one year and shall be entitled to vote.

Primary Education Standing Committee

**73.** (1) The Corporation shall appoint a Standing Committee, to be called the Primary Education Standing Committee to advise them in regard to all matters relating to primary education in Calcutta.

(2) Such Committee shall consist of not more than six Councillors or Aldermen and of such other persons (not exceeding three in number), as the Corporation may from time to time and for such period as they think fit, by a specific resolution, associate with the Committee.

(3) Persons so associated with the Committee shall have a right to vote at meetings of the Committee, and shall be deemed to be members thereof for all purposes during the said period.

Sub-committees of Standing Committees

**74.** (1) Any Standing Committee of the Corporation may appoint one or more Sub-committees for any purpose referred to them which, in their opinion, can be more usefully carried out by a Sub-committee.

*(Part II.—Chapter V.—Conduct of business.—Sections 75, 76.)*

(2) A Sub-committee may be appointed for such time and subject to such limitations and conditions as to report and otherwise as the Standing Committee appointing the Sub-committee may from time to time think fit.

(3) No Sub-committee shall continue to exist after the Standing Committee appointing it has ceased to exist.

(4) All proceedings of any Sub-committee shall be subject to confirmation by the Standing Committee appointing it.

(5) It shall not be necessary for any of the members of a Sub-committee to be a member of the Standing Committee appointing such Sub-committee

*Special Committees*

Special Committees.

**75.** (1) The Corporation may from time to time, by specific resolution, appoint a Special Committee to inquire into and report upon any matter (to be specified in such resolution) which may arise in connection with any of the functions, powers or duties of the Corporation and which is not at the time under consideration by a Standing Committee constituted under section 71

(2) The Corporation may also from time to time, by specific resolution, associate with any such Special Committee, for such period as they think fit, any persons, who are not Councillors or Aldermen, but whose assistance or advice is required for the purposes for which the Special Committee is appointed and such persons shall have a right to vote at meetings of the Special Committee, and shall be deemed to be members thereof for all purposes during the said period.

(3) The provisions of sub-sections (3), (4), (5) (excluding the proviso), (6), (7) and (8) (excluding the proviso) of section 71 shall, with all necessary modifications, be deemed to apply to every Special Committee appointed under this section and such Committee shall confine their inquiry to the matter specified in the resolution referred to in sub section (1)

(4) The Corporation may make rules for regulating the conduct of business at meetings of Special Committees.

*Minutes and reports of proceedings.*

Keeping of minutes of proceedings

**76.** Minutes, in which shall be recorded the names of the members present at, and the proceedings of, each meeting of the Corporation, and of every Standing or Special Committee, respectively, shall be drawn up and fairly entered in a book to be kept for that purpose, and shall be laid before the next ensuing meeting of the Corporation or of such Committee, as the case may be, and signed at such meeting by the Mayor or President thereof.

*(Part II.—Chapter V.—Conduct of business.—Sections 77—79.)*

Inspection of minutes and reports of proceedings

**77.** The minutes referred to in section 76 and the full reports (if any) of the proceedings of meetings of the Corporation, shall, at all reasonable times, be kept open at the municipal office for the inspection of any Councillor or Alderman without charge, and of any other person on payment of a fee of eight annas.

Forwarding of minutes and reports of proceedings to Local Government

**78.** The Executive Officer shall forward to the Local Government a copy of the minutes of the proceedings of each meeting of the Corporation, within ten days from the date on which the minutes of the proceedings of such meeting were signed as prescribed in section 76;

and, if the Local Government so direct in any case, shall also forward a copy of all papers which were laid before the Corporation or the Standing or Special Committee, as the case may be, for consideration at such meeting;

and shall also forward to the Local Government, as soon as may be after such date, a full report of the proceedings of meetings of the Corporation, if any such report be prepared.

*Supplemental provisions*

Validation of acts and proceedings

**79.** (*1*) No act done or proceeding taken under this Act shall be questioned on the ground merely of—

(*a*) the existence of any vacancy in, or any defect in the constitution of, the Corporation, or any Standing or Special Committee,

(*b*) any Councillor or Alderman having voted or taken part in any proceeding in contravention of proviso (*b*) to section 22, or

(*c*) any defect or irregularity not affecting the merits of the case.

(*2*) Every meeting of the Corporation, or of any Standing or Special Committee, the minutes of the proceedings of which have been duly signed as prescribed in section 76, shall be deemed to have been duly convened and to be free from all defects and irregularity.

## PART III.

### FINANCE.

### CHAPTER VI

### THE MUNICIPAL FUND

Municipal Fund to be sole and to be held in trust

**80.** There shall be one Municipal Fund, and it shall be held by the Corporation in trust for the purposes of this Act, subject to the provisions therein contained

Credit of moneys to Municipal Fund

**81.** (*1*) All moneys realized or realizable under this Act shall be credited to the Municipal Fund

(*2*) The balances standing at the credit of the several municipal funds of the Corporation at the commencement of this Act, and all interest and profits arising from any investment and from any transaction in connection with any of the said municipal funds shall be transferred to the said Municipal Fund.

Receipt of moneys and deposit in bank.

**82.** All moneys payable to the credit of the Municipal Fund shall be forthwith paid into the Imperial Bank of India to the credit of an account which shall be styled "the account of the Municipal Fund of the City of Calcutta"

Provided that, with the sanction of the Local Government, any moneys accruing from any of the several funds of the Corporation, which, at the commencement of this Act, are held in deposit by any bank or banks in Calcutta other than the Imperial Bank of India may be left in such deposit by the Corporation for such period as they think fit.

Drafts on the Municipal Fund.

**83.** (*1*) Subject to the provisions of sections 18, 118 and 119, no payment shall be made by the Imperial Bank of India out of the Municipal Fund except upon a cheque signed—

(*a*) by any two of the following persons, namely :—

(*i*) the Executive Officer,

(*ii*) the Deputy Executive Officer,

(*iii*) the Secretary,

(*iv*) the Chief Accountant, or,

*(Part III.—Chapter VI.—The Municipal Fund.—Sections 84, 85.)*

(*b*) in the event of the illness or absence from Calcutta of any three of the persons mentioned in clause (*a*), by the remaining one of such persons and any other person appointed in that behalf by the Executive Officer, or,

(*c*) in the event of the illness or absence from Calcutta of all the persons mentioned in clause (*a*), by any two other persons appointed in that behalf by the Executive Officer and approved by the Corporation.

(*2*) Except in the case of salaries up to three hundred rupees, which may be paid in cash, payment of any sum due by the Corporation exceeding one hundred rupees in amount shall be made by means of a cheque signed as provided in sub-section (*1*), and not in any other way.

(*3*) Payment of any sum due by the Corporation not exceeding one hundred rupees in amount may be made in cash, cheques signed as prescribed in sub-section (*1*) being drawn from time to time to cover such payments.

Application of Municipal Fund

**84.** (*1*) The moneys from time to time credited to the Municipal Fund shall be applied in payment of all sums, charges and costs necessary for carrying out the purposes of this Act, or of which the payment is duly directed or sanctioned by or under any of the provisions of this Act.

(*2*) Such moneys shall likewise be applied in payment of all sums payable out of the Municipal Fund under any other enactment for the time being in force.

Payments not to be made out of Municipal Fund unless covered by a budget grant and balance is available

**85.** No payment of any sum out of the Municipal Fund shall be made unless the expenditure of the same is covered by a current budget-grant and a sufficient balance of such budget-grant is still available notwithstanding any reduction or transfer thereof which may have been made under section 95 or section 96:

Provided that this section shall not apply to payments made in the following classes of cases, namely:—

(*a*) refunds of taxes and other moneys which are authorized by this Act;

(*b*) repayments of moneys belonging to contractors or other persons and held in deposit and of moneys collected or credited to the Municipal Fund by mistake;

*(Part III.—Chapter VI.—The Municipal Fund.—Sections 86—88.)*

(*c*) sums payable in any of the following circumstances—

(*i*) under section 18, under the orders of the Local Government;

(*ii*) under section 84, sub-section (*2*); or

(*iii*) under the direction of any officer appointed under section 118 or section 119;

(*iv*) under the decree or order of a civil or criminal court passed against the Corporation;

(*v*) under a compromise of any suit or other legal proceeding or claim effected under section 537;

(*d*) temporary payments under section 88 for works urgently required for the public service;

(*e*) sums which are by or under section 252, sub-section (*2*), section 301, sub-section (*2*), section 304, sub-section (*1*), section 312, sub-section (*2*), section 389, sub-section (*4*), section 410, sub-section (*2*), section 412, sub-section (*4*), section 508, sub-section (*3*), section 520, clause (*c*) of sub-section (*2*) of section 535, or rule 2, sub-rule (*6*), of Schedule XVI, required or allowed to be paid by way of compensation;

(*f*) sums payable as compensation under any rule or by-law made under this Act, and

(*g*) expenses incurred by the Corporation in the exercise of the powers conferred by section 147.

Duty of person signing cheque

**86.** Before any person authorized under section 83 signs a cheque, he shall satisfy himself that the sum for which such cheque is drawn is either—

(*a*) required for a purpose or work specifically sanctioned by the proper authority and covered by a current budget-grant, or

(*b*) required for any payment referred to or specified in the proviso to section 85.

Procedure when money not covered by a budget-grant is expended under clauses (*c*), (*e*), (*f*), or (*g*) of section 85

**87.** Whenever any sum is expended under clauses (*c*), (*e*), (*f*) or (*g*) of the proviso to section 85, the Corporation shall take such action under section 95 as may in the circumstances appear possible and expedient for covering the amount of the additional expenditure; and all sums expended under clause (*g*) of the said proviso shall be forthwith reported to the Corporation.

Temporary payments from the Municipal Fund for works urgently required for the public service

**88.** (*1*) On the written requisition of a Secretary to the Local Government, the Corporation may at any time undertake the execution of any work certified by such Secretary to be urgently required for the public service, and for this purpose may temporarily make payments from the Municipal Fund, so far as the same

*(Part III.—Chapter VI.—The Municipal Fund.—Sections 89—92.)*

can be made without unduly interfering with the regular working of the municipal administration.

(2) The cost of all work so executed and of the establishment engaged in executing the same shall be paid by the Local Government and credited to the Municipal Fund.

Compensation to the Tollygunge, and South Suburban Municipalities

**89.** (1) The Corporation shall pay from the Municipal Fund to the Commissioners of the Tollygunge Municipality two thousand six hundred and thirty-two rupees to compensate them for the expenditure incurred by them on local drainage within the area of the Ballygunge Pumping station and the High Level Outfall Sewer added to Calcutta.

(2) From the commencement of this Act, the Corporation shall pay annually from the Municipal Fund for ten years to the Commissioners of the South Suburban Municipality the sum of eight thousand rupees, being approximately, at the commencement of this Act, one-half of the difference between the gross revenue obtained as rates and taxes from, and the amount expended on, that portion of the area known as the New Dock Extension Area which was formerly comprised within the said municipality and which forms part of the area added to Calcutta.

Special payments on improvements of the area which formed the Maniktala, Cossipur-Chitpur, and Garden Reach Municipalities

**90.** The Corporation shall, beginning from the third year after the commencement of this Act, spend annually for ten years a sum of not less than one lakh of rupees on the execution of original improvement works within the area which formed the Maniktala Municipality before the commencement of this Act, a sum of not less than a lakh of rupees on the execution of original improvement works within the area which formed the Cossipur-Chitpur Municipality at the commencement of this Act and a sum of not less than a lakh of rupees on the execution of original improvement works within the area which formed the Garden Reach Municipality at the commencement of this Act.

Expenditure on primary education

**91.** The Corporation shall spend annually a sum of not less than a lakh of rupees for the purpose of promoting primary education among boys between the ages of six and twelve years and girls between the ages of six and ten years residing in Calcutta.

Investment of surplus money

**92.** (1) Surplus moneys at the credit of the Municipal Fund, which cannot immediately or at an early date be applied to the purposes of this Act, may from time to time be deposited at interest or placed in current account in the Imperial Bank of India, or in any other bank or banks in Calcutta which may be approved by the Local Government, or invested in any of the securities or debentures mentioned in section 112, sub-section (1):

Provided that, where any money is placed in current account under this sub-section with any bank or banks other than the Imperial Bank of India, no cheques shall be drawn by the Corporation against such current account, except in favour of the Imperial Bank of India.

(2) The loss, if any, arising from any such deposit or investment shall be debited to the Municipal Fund.

(*Part III.*)

## CHAPTER VII.

### BUDGET ESTIMATE.

Executive Officer to lay before Corporation annual estimates of expenditure, receipts and balances and statement of proposed taxes

**93.** The Executive Officer shall, on or before each tenth day of February, cause to be prepared and lay before the Corporation, in such form as the Corporation may from time to time approve,—

(*a*) an estimate of the expenditure which should, in his opinion, be incurred by the Corporation in the next ensuing year,

(*b*) an estimate of receipts from all sources during the said year,

(*c*) an estimate of all balances, if any, which will be available for reappropriation or expenditure at the commencement of the said year, and

(*d*) a statement of proposals as to the taxation which it will, in his opinion, be necessary or expedient to impose under this Act in the said year

Corporation to frame Budget Estimate

**94.** (*1*) The Corporation shall consider the estimates and proposals submitted by the Executive Officer under section 93 and shall thereafter—

(*a*) on or before the twenty-second day of March in each year frame and adopt a Budget Estimate of income and expenditure for the ensuing year, and

(*b*) determine, subject to the provisions of Part IV, the levy of the consolidated rate and taxes for the said year at such rates as are necessary to provide for the purposes mentioned in sub-section (*2*):

Provided that, except under section 18 or section 96, the rates so determined shall not be subsequently altered for the year for which they have been determined.

(*2*) In such Budget Estimate, the Corporation shall, among other things,—

(*a*) make adequate and suitable provision for such services as may be required for the fulfilment of the several duties imposed by this Act,

(*b*) provide for the payment, as they fall due, of all instalments of principal and interest for which the Corporation may be liable in respect of loans contracted by them, and

(*c*) allow for a cash balance at the end of the said year of not less than six lakhs of rupees.

*(Part III.—Chapter VII.—Budget Estimate.—Sections 95, 96.)*

Power to Corporation to alter budget-grants

**95.** (*1*) The Corporation may from time to time during the year—

(*a*) increase the amount of any budget-grant,

(*b*) make an additional budget-grant to meet any special or unforeseen requirement arising during the same year,

(*c*) transfer the amount or a portion of the amount of any budget-grant to the amount of any other budget-grant, or

(*d*) reduce the amount of any budget-grant:

Provided as follows :—

(*i*) due regard shall be had to all the requirements of this Act, and

(*ii*) in making any increase or additional budget-grant, the estimated cash balance at the close of the year shall not be reduced below six lakhs of rupees.

(*2*) Every increase to a budget-grant and every additional budget-grant made in any year under sub-section (*1*) shall be deemed to be included in the Budget Estimate finally adopted for that year.

Power to Corporation to re-adjust income and expenditure during the year

**96.** (*1*) If at any time during the year it appears to the Corporation that, notwithstanding any reduction of budget-grants that has been made under section 95, the income of the Municipal Fund during the same year will not suffice to meet the expenditure sanctioned in the Budget Estimate of that year, and to leave at the close of the year a cash balance of not less than six lakhs of rupees, then it shall be incumbent on the Corporation forthwith to sanction any measure which they may consider necessary for proportioning the year's income to the expenditure.

(*2*) For the purposes of sub-section (*1*), the Corporation may either diminish the sanctioned expenditure of the year, so far as it may be possible so to do with due regard to all the requirements of this Act, or have recourse to supplementary taxation or to an increase of the rates, or adopt all or any of those methods:

Provided that the rates shall not be raised under this section beyond the maximum percentage prescribed under section 124, and that the supplementary taxation shall not be imposed unless two-thirds of the members of the Corporation present at a meeting have voted in favour of it.

(*Part III.*)

## CHAPTER VIII.

### LOANS.

Power to Corporation to borrow money

**97.** (*1*) The Corporation may, in pursuance of a resolution passed at a meeting, from time to time raise a loan, by the issue of debentures or otherwise on the security of the consolidated rate, or of all or any of the taxes, fees and dues authorized by this Act (or of both the said rate and all or any of the said taxes, fees and dues), of any sums of money which may be required—

(*a*) for the construction of works under this Act, or

(*b*) for the acquisition of land for the purposes of this Act, or

(*c*) to pay off any debt due to the Government, or

(*d*) to repay a loan raised under this Act:

Provided as follows :—

(*i*) no loan shall be raised without the previous sanction of the Local Government;

(*ii*) the rate of interest to be paid for any loan, and the terms (as to the time and method of repayment, and otherwise) upon which any loan is to be raised, shall be subject to the approval of the Local Government;

(*iii*) the period within which a loan is to be repaid shall in no case exceed sixty years, and

(*iv*) no loan exceeding in amount twenty-five lakhs of rupees shall be raised unless the terms, including the date of floatation, of such loan have been approved by the Government of India.

(*2*) When any sum of money has been borrowed under sub-section (*1*),—

(*i*) no portion thereof shall, without the previous sanction of the Local Government, be applied to any purpose other than that for which it was borrowed, and

(*ii*) no portion of any sum of money borrowed under clause (*a*) of sub-section (*1*) shall be applied to the payment of salaries or allowances to any municipal officers or servants, other than those who are exclusively employed upon the works for the construction of which the money was borrowed.

Determination of sums to be borrowed

**98.** The Corporation shall, at a meeting to be held on or before the twenty-second day of March in each year, after considering the Executive Officer's proposals in this behalf, determine, subject to the provisions of this Act, what sums of money (if any) shall be borrowed under section 97 in the next ensuing year.

*(Part III.—Chapter VIII.—Loans.—Sections 99—102.)*

Power of Corporation to open credit account with a bank

**99.** Notwithstanding anything contained in section 97, whenever the borrowing of any sum has been sanctioned under that section, the Corporation may, instead of borrowing such sum or any part thereof from the public or any member thereof, take credit on such terms as may be sanctioned by the Local Government, from any bank on a cash account to be kept in the name of "the Municipal Corporation of the City of Calcutta" to the extent of such sum or part and, with the sanction of the Local Government, may grant mortgages of all or any of the property vested in the Corporation by way of securing the repayment of the amount of such credit or of the sums advanced from time to time on such cash account with interest.

Limit to borrowing powers

**100.** Notwithstanding anything hereinbefore contained, the borrowing powers of the Corporation shall be limited so that the sums payable under this Act during any year for interest and for the maintenance of Sinking Funds (including the payments prescribed by sub-clause (*c*) of clause (1) of section 108), shall not exceed ten *per cent* on the annual rateable value of land and buildings as determined under Chapter X.

Form, exchange, transfer and effect of debentures

**101.** (*1*) All debentures issued under this Act shall be in such form, and signed by such person, as the Corporation may from time to time prescribe, with the previous sanction of the Local Government, or (in the case of a loan raised out of India) the Government of India.

(*2*) The holder of any debenture in any form prescribed under sub-section (*1*) may obtain in exchange therefor, upon such terms as the Corporation may from time to time determine, a debenture in any other form so prescribed.

(*3*) The holder of any debenture issued by the Corporation under the authority of any prior enactment may obtain in exchange therefor, upon such terms as the Corporation may from time to time determine, a debenture in a form prescribed under sub-section (*1*).

(*4*) Every debenture issued by the Corporation under this Act shall be transferable in such manner as shall be therein expressed.

(*5*) The right to sue in respect of the moneys secured by any such debentures, or by any debentures issued by the Corporation under the authority of any prior enactment, shall be vested in the holders thereof for the time being, without any preference by reason of some of such debentures being prior in date to others.

Signature of coupons attached to debentures.

**102.** All coupons attached to debentures issued under this Act shall bear the signature of the Executive Officer; and such signature may be engraved, lithographed or impressed by any mechanical process.

*(Part III.—Chapter VIII.—Loans.—Sections 103—107.)*

Payment to survivors of joint payees.

**103.** When any debenture or security issued under this Act is payable to two or more persons jointly, and either or any of them dies, then, notwithstanding anything in section 45 of the Indian Contract Act, 1872, the debenture or security shall be payable to the survivor or survivors of such persons: IX of 1872.

Provided that nothing in this section shall affect any claim by the representative of a deceased person against such survivor or survivors.

Receipt by joint holder for interest or dividend

**104.** Where two or more persons are joint holders of any debenture or security issued under this Act, any one of such persons may give an effectual receipt for any interest or dividend payable in respect of such debenture or security, unless notice to the contrary has been given to the Corporation by any other of such persons

Repayment of loans

**105.** Every loan raised by the Corporation under section 97 shall be repaid within the time approved under proviso (*ii*) to sub-section (*1*) of that section, and by such of the following methods as may be so approved, namely.—

(*a*) from a Sinking Fund established under section 106 in respect of the loan, or

(*b*) partly from the Sinking Fund established under section 106 in respect of the loan, and (to the extent to which that Sinking Fund falls short of the sum required for the repayment of the loan) partly from money borrowed for the purpose under clause (*d*) of sub-section (*1*) of section 97

Establishment and maintenance of Sinking Funds for such loans

**106.** (*1*) Whenever the repayment from a Sinking Fund of a loan referred to in section 105, has been approved under proviso (*ii*) to sub-section (*1*) of section 97, the Corporation shall establish such a fund and shall pay into it every six months until the loan is repaid, a sum so calculated that, if regularly paid, it would, with accumulations in the way of compound interest, be sufficient, after payment of all expenses, to pay off the loan at the time approved.

(*2*) The rate of interest, on the basis of which the sum referred to in sub-section (*1*) shall be calculated, shall be such as may be prescribed by the Government of India.

(*3*) A separate Sinking Fund shall be established in respect of each loan referred to in section 105.

Power to discontinue payments into Sinking Fund

**107.** Notwithstanding anything contained in section 106, if at any time the sum standing at credit of the Sinking Fund established for the repayment of any loan is of such amount that, if allowed to accumulate at the rate of interest prescribed under sub-section (*2*) of that section, it will be sufficient to repay the loan at the time approved under proviso (*ii*) to sub-section (*1*) of section 97, then, with the permission of the Local Government, further payments into such fund may be discontinued.

*(Part III.—Chapter VIII.—Loans.—Section 108.)*

Provisions regarding loans raised between the 1st April, 1881, and the commencement of the Calcutta Municipal (Loans) Act, 1914

**108.** In respect of all loans raised by the Corporation between the first day of April, 1881, and the commencement of the Calcutta Municipal (Loans) Act, 1914, the following provisions shall have effect, namely :— Ben Act IV of 1914

(*1*) The Corporation shall maintain a Sinking Fund in respect of all such loans, and shall pay into such Fund the following sums :—

(*a*) on the first day of January and the first day of July in each year, in respect of such of the said loans as were repaid before the thirty-first day of March, 1914, a sum representing four *per cent per annum* on the amount of each of such loans, such payments to be continued, in the case of each of such loans, until the expiry of a period of forty-seven years from the date on which the loan was raised, and

(*b*) on the first day of January and the first day of July in each year, in respect of such of the said loans as have not been repaid before the thirty-first day of March, 1914, a sum representing one *per cent per annum* on the amount of each of such loans, until the loan is repaid, and

(*c*) on the first day of January and the first day of July in each year, for a period of ten years, with effect from the first day of July, 1914, the sum of sixty-six thousand rupees.

(*2*) When any of the said loans hereafter falls due for repayment, it shall be repaid—

(*i*) from the sums which have accumulated in the Sinking Fund maintained under clause (*1*) and in Sinking Fund A maintained before the commencement of the Calcutta Municipal (Loans) Act, 1914, to the extent to which six monthly payments of one *per cent. per annum* on the amount of any such loan would have accumulated at three *per cent* compound interest from the date of its commencement, and Ben Act IV of 1914

(*ii*) to the extent to which the sums referred to in sub-clause (*i*) of this clause fall short of the sum required for repayment of the loan—from money to be borrowed by the Corporation for the purpose, for any period not exceeding the period by which the term of the original loan falls short of forty-seven years.

(*3*) A separate Sinking Fund shall be established in respect of each amount borrowed under sub-clause (*ii*) of clause (*2*) of this section, and the provisions of sections 106 and 107 shall apply to each such Sinking Fund.

*(Part III.—Chapter VIII.—Loans.—Sections 109—112.)*

Method of disposal of securities transferred to Corporation under Ben Act IV of 1914

**109.** All securities and cash jointly or severally held, before the commencement of the Calcutta Municipal (Loans) Act, 1914, by the Secretary to the Government of Bengal in the Financial Department and the Accountant-General, Bengal, as Trustees for and in respect of Sinking Fund A referred to in sub-clause (*i*) of clause (*2*) of section 108 and transferred by them to the Corporation in pursuance of the provisions of that Act, shall be held by the Corporation as part of the Sinking Fund established under section 108 and all other securities and cash held in any other Sinking Fund established by the Corporation under the said Calcutta Municipal (Loans) Act, 1914, shall vest in the Corporation for the purpose of repayment of the loan in respect of which such Sinking Fund was established and such Sinking Fund shall be deemed to have been established under section 106. Ben Act IV of 1914

Power to Corporation to consolidate their loans

**110.** (*1*) Notwithstanding anything contained in this Act, the Corporation may consolidate all or any of their loans, and for that purpose may invite tenders for a new loan (to be called 'the Calcutta Municipal Consolidated Loan, 19 ') and invite holders of municipal debentures to exchange their debentures for scrip of such loan.

(*2*) The terms of every such consolidated loan, and the rates at which exchange into such consolidated loan shall be permitted, shall be subject to the previous approval of the Government of India

(*3*) The period for the extinction of any such consolidated loan shall not, without the sanction of the Government of India, extend beyond the furthest date within which any of the loans to be consolidated would otherwise be repayable.

(*4*) The Corporation shall provide for the repayment of every such consolidated loan by establishing a Sinking Fund therefor

(*5*) The provisions of sections 106 and 107 shall apply to each Sinking Fund established under sub-section (*4*).

Provided that, in calculating the sum to be paid into any such Sinking Fund in pursuance of section 106, any sums transferred to that fund in pursuance of proviso (*i*) or proviso (*ii*) to section 114 shall be taken into account.

Time for repayment of money borrowed to extinguish previous loan

**111.** The time for the repayment of any money borrowed under this Act for the purpose of extinguishing any previous loan shall not, except with the express sanction of the Government of India, extend beyond the unexpired portion of the period for which such previous loan was sanctioned.

Investment of Sinking Funds.

**112.** (*1*) All moneys paid into a Sinking Fund shall as soon as possible be invested by the Corporation in—

(*a*) Government securities, or
(*b*) securities guaranteed by the Government, or
(*c*) Calcutta Municipal debentures, or
(*d*) debentures issued by the Commissioners for the Port of Calcutta, or
(*e*) debentures issued by the Trustees for the Improvement of Calcutta,

and shall be held by the Corporation for the purpose of repaying from time to time the debentures issued by it.

(*2*) All dividends and other sums received in respect of any such investment shall, as soon as possible after receipt, be paid into the appropriate Sinking Fund and invested in the manner prescribed by sub-section (*1*)

(*3*) Moneys standing at credit of two or more Sinking Funds may, at the discretion of the Corporation, be invested together as a common fund, and it shall not be necessary for the Corporation to allocate the securities held in such investments among the several Sinking Funds.

(*4*) Any investment made under this section may from time to time, subject to the provisions of sub-section (*1*), be varied or transposed.

Power to Corporation to reserve a portion of loan-debentures for investment of Sinking Funds

**113.** (*1*) For the purpose of investing any portion of the Municipal Fund (including Sinking Funds) the Corporation may, with the previous sanction of the Local Government, reserve and set apart for issue at par to and in the name of the Corporation of Calcutta any portion of the debentures to be issued on account of any loan, provided that the intention so to reserve and set apart such debentures shall have been notified as a condition of the issue of the loan.

(*2*) The issue of any such debentures to the Corporation, as aforesaid, shall not operate to extinguish or cancel such debentures, but every debenture so issued shall be valid in all respects as if issued to and in the name of any other person.

(*3*) The purchase by, or the transfer, assignment or endorsement to, the Corporation, of any debenture issued by the Corporation shall not operate to extinguish or cancel any such debenture, but the same shall be valid and negotiable in the same manner and to the same extent as if held by, or transferred, assigned or endorsed to any other person.

Application of Sinking Funds

**114.** Until any loan is wholly repaid, the Corporation shall not apply the Sinking Fund established in respect of that loan to any purpose other than the repayment of that loan:

Provided that—

(*i*) when any loan, or part thereof, which is raised after the commencement of this Act, is consolidated under section 110, the Corporation shall transfer to the Sinking Fund established for such consolidated loan the sum standing at credit of the Sinking Fund of the original loan, or if part only of a loan is consolidated, then such part of the sum standing at credit of the Sinking Fund of the original loan as is proportionate to the amount of the original loan which is incorporated in the consolidated loan; and

(*ii*) when any loan, or part thereof, which was raised before the commencement of the Calcutta Municipal (Loans) Act, 1914, has been consolidated, the Corporation shall transfer such amounts as the Government of India may direct from the Sinking Fund maintained under clause (*1*) of section 108, and from Sinking Fund A maintained

Ben Act IV of 1914.

*(Part III.—Chapter VIII.—Loans.— Sections 115—117.)*

before the commencement of the said Act to the Sinking Fund established for consolidated loans under section 110, sub-section (*4*).

Annual statement by Executive Officer.

**115.** (*1*) The Executive Officer shall, at the end of each year, prepare a statement showing—

(*a*) the amount which has been invested during the year under section 112,

(*b*) the date of the last investment made previous to the submission of the statement,

(*c*) the aggregate amount of the securities then in the hands of the Corporation, and

(*d*) the aggregate amount which has, up to the date of the statement, been applied under section 114, in or towards repaying loans.

(*2*) Every such statement shall be laid before a meeting of the Corporation and published in the *Calcutta Gazette*.

Priority of payments for interest and repayment of loans over other payments.

**116.** All payments due from the Corporation for interest on and repayment of loans shall be made in priority to all other payments due from the Corporation.

Annual examination of Sinking Funds

**117.** (*1*) All Sinking Funds established under this Act shall be subject to annual examination by the Accountant-General, Bengal, who shall ascertain whether the cash and the value of the securities belonging thereto are actually equal to the amount which should be at the credit of such funds had investments been regularly made and had the rate of interest as originally estimated been obtained therefrom.

(*2*) The amount which should be at the credit of a Sinking Fund shall be calculated on the basis of the present value of all future payments required to be made to such fund under the provisions of this Act, on the assumption that all investments are regularly made and the rate of interest as originally estimated is obtained therefrom.

The value of securities belonging to a Sinking Fund shall be their current value unless they fall due for redemption at par or above before maturity of the Fund in which case their current value shall be taken as their redemption value, except in the case of Calcutta Municipal Debentures which shall always be valued at par, provided that the Corporation shall make good immediately any loss which may accrue on the actual sale of such debentures at the time of the repayment of the loan.

(*3*) The Corporation shall forthwith pay into any Sinking Fund any amount which the Accountant-General may certify to be deficient, unless the Local Government specially sanction a gradual readjustment.

(*4*) If the cash and the value of the securities at credit of any Sinking Fund are in excess of the amount which should be at its credit, the Accountant General shall certify the amount of such excess sum, and the Corporation may thereupon transfer the excess sum to the Municipal Fund.

*(Part III.—Chapter VIII.—Loans.—Sections 118, 119.)*

(*5*) If any dispute arises as to the accuracy of any certificate made by the Accountant-General under sub-section (*3*) or sub-section (*4*), the Corporation may, after making the payment or transfer therein mentioned, refer the matter to the Local Government, whose decision shall be final.

Attachment of Municipal Fund for recovery of money borrowed from the Government

**118.** (*1*) If any money borrowed by the Corporation from the Government, whether before or after the commencement of this Act, or any interest or costs due in respect thereof, is or are not repaid according to the conditions of the loan, the Local Government may attach the Municipal Fund or any portion thereof.

(*2*) After such attachment, no person except an officer appointed in this behalf by the Local Government shall in any way deal with the attached fund or portion thereof; but such officer may do all acts in respect thereof which the Corporation or any Municipal Officer or servant might have done if such attachment had not taken place, and may apply the proceeds in satisfaction of the arrear and of all interests and costs due in respect thereof and of all expenses caused by the attachment and subsequent proceedings:

Provided that no such attachment shall defeat or prejudice any debt for which the fund attached was previously pledged in accordance with law; but all such prior charges shall be paid out of the proceeds of the fund before any part of the proceeds is applied to the satisfaction of the debt due to the Government.

Attachment of Municipal Fund for securing payment into Sinking Fund

**119.** If the Corporation fail to make any payment as required by section 117, sub-section (*3*), the Local Government may attach the Municipal Fund or any portion thereof; and the provisions of section 118, sub-section (*2*), shall, with all necessary modifications, be deemed to apply.

(*Part III.*)

## CHAPTER IX

### ACCOUNTS.

Accounts to be kept

**120.** Accounts of receipts and expenditure of the Corporation shall be kept in such manner and in such forms as they may from time to time prescribe.

Appointment and powers of municipal auditors

**121.** (*1*) The municipal accounts shall be examined and audited from time to time by auditors appointed in that behalf by the Local Government.

(*2*) The auditors so appointed may,—

(*a*) by written summons, require the production before them of any document which they may consider necessary for the proper conduct of their audit;

(*b*) by written summons, require any person accountable for, or having the custody or control of, any such document to appear in person before them, and

(*c*) require any person so appearing before them to make and sign a declaration with respect to such document or to answer any question or prepare and submit any statement.

Reports and information to be furnished by auditors

**122.** The auditors appointed under section 121 shall—

(*a*) report to the Corporation any material impropriety or irregularity which they may observe in the expenditure, or in the recovery of moneys due to the Corporation, or in the municipal accounts;

(*b*) furnish to the Corporation such information as the Corporation may from time to time require concerning the progress of their audit; and

(*c*) as soon as may be after the completion of their audit, deliver to the Corporation a report upon the municipal accounts.

Corporation to report to Local Government action on defects.

**123.** It shall be the duty of the Corporation to report to the Local Government as soon as possible the action taken by them, or in the case of a difference of opinion between the Corporation and the auditors the action which they propose to take, in respect of any defects or irregularities that may be pointed out by the auditors; and it shall be competent to the Local Government to pass such orders as they think fit upon such report, and such orders shall be final.

## PART IV.

### TAXATION.

### CHAPTER X.

### THE CONSOLIDATED RATE.

*Imposition of consolidated rate.*

Power to Corporation to impose consolidated rate.

**124.** A consolidated rate not exceeding twenty-three *per cent.* on the annual valuation determined under this chapter may be imposed by the Corporation upon all lands and buildings in Calcutta for the purposes of this Act.

Amount of consolidated rate, how to be fixed

**125.** The amount of the said rate shall be fixed annually, in the manner provided in Chapter VII, with reference to the requirements of the Municipal Fund.

*Exemptions.*

Exemptions from consolidated rate

**126.** (*1*) Buildings used exclusively for purposes of public worship, and public burial or burning grounds or other places for the disposal of the dead duly registered under Chapter XXXI, shall be exempt from the consolidated rate;

and the Corporation may either wholly or partially exempt from the consolidated rate any land or building used exclusively for purposes of public charity:

Provided that the following land and buildings shall not be deemed to be used exclusively for public worship or for purposes of public charity within the meaning of this section, namely,—

(*a*) land or buildings in or on which any trade or business is carried on; and

(*b*) land or buildings in respect of which rent is derived, whether such rent is or is not applied exclusively to religious purposes or purposes of public charity.

(*2*) Open spaces and parade grounds, which are the property of Government and over which, when not required for military purposes, the public are allowed to have free access, shall be exempted from the consolidated rate, if the Local Government so direct.

(*3*) The Corporation may exempt the owner of any hut from payment of the whole or any portion of the consolidated rate payable in respect of such hut, and in any such case they may exempt the owner of the land on which the hut is built, or not, as they think fit.

(*4*) The Corporation may, by resolution, exempt from the consolidated rate all lands and buildings the annual valuation of which, as determined under this chapter, does not exceed twenty rupees or such smaller sum as may be specified in such resolution:

*(Part IV.—Chapter X.—The consolidated rate—Section 127.)*

Provided that no person shall be entitled to claim the benefit of such exemption if he owns or occupies more than one piece of land or more than one building and the aggregate annual valuation of all the lands or buildings owned or occupied by him exceeds twenty rupees or the said smaller sum.

*Assessment of lands and buildings to the consolidated rate.*

Annual value of land or building, how to be ascertained.

**127.** For the purpose of assessing land and buildings to the consolidated rate,—

(*a*) the annual value of land, and the annual value of any building erected for letting purposes or ordinarily let, shall be deemed to be the gross annual rent at which the land or building might at the time of assessment reasonably be expected to let from year to year, less, in the case of a building, an allowance of ten *per cent.* for the cost of repairs and for all other expenses necessary to maintain the building in a state to command such gross rent; and

(*b*) the annual value of any building not erected for letting purposes and not ordinarily let shall be deemed to be five *per cent.* on the sum obtained by adding the estimated present cost of erecting the building, less a reasonable amount to be deducted on account of depreciation (if any), to the estimated present value of the land valued with the building as part of the same premises:

Provided as follows:—

(*i*) the annual value of a *bustee* shall be deemed to be the gross annual rent at which the land contained within it, excluding the lands which have been left vacant for the purposes of any *bustee* street prescribed in or under a standard plan approved by the Corporation under Chapter XXII, might reasonably be expected to let from year to year, *plus* the gross annual rent at which the huts erected thereon might reasonably be expected to let from year to year, after deducting therefrom the rent of the land and an allowance of ten *per cent.* for the cost of repairs and for all expenses necessary to maintain such huts in a state to command such gross rent;

(*ii*) in calculating the value of any land or building under this section, the value of any machinery on such land or in such building shall be excluded, but all fixtures including lifts and electric and other fittings which add to the convenience of the building shall be valued, subject in the case of a lift to such deduction from the valuation, as the Executive Officer may think proper, on account of the cost of repairs to, maintenance of, and attendance on, such lift;

*(Part IV.—Chapter X.—The consolidated rate.—Sections 128, 129.)*

(*iii*) if in the case of a building valued under clause (*b*), the annual value of which does not exceed five hundred rupees, any exceptional circumstances exist which render a valuation of five *per cent.* on the cost of erecting the building less depreciation, excessive, a lower percentage may be taken;

(*iv*) when any building has been valued at a special percentage taken under proviso (*iii*), it may be re-valued at any time after the exceptional circumstances referred to in that proviso have ceased to exist.

Annual value of land or building belonging to the Calcutta Improvement Trust

**128.** For the purpose of assessing land and buildings belonging to the Board of Trustees for the Improvement of Calcutta to the consolidated rate, the annual value of such land or building acquired by purchase or otherwise by the Board for the execution of an improvement scheme for the purposes of the Calcutta Improvement Act, 1911, which has been framed after the commencement of this Act, shall be deemed to be five *per cent.* on the cost of acquisition thereof, subject, on application made in this behalf by the Board, to revision by the Local Government; and such annual value shall be fixed from the date of the acquisition in each succeeding quarter on the basis of such cost, and shall, notwithstanding anything contained in section 131, remain in force until the streets (if any) laid out or altered and the open spaces (if any) provided in executing the scheme have vested in the Corporation under section 65 of the said Act. Ben Act V of 1911

*Explanation.*—For the purposes of this section the cost of acquisition means—

(*a*) in the case of land and buildings acquired under the Land Acquisition Act, 1894, as amended by the Calcutta Improvement Act, 1911, the value of the land and buildings as determined by the Land Acquisition Collector or by the Tribunal under the Calcutta Improvement Act, 1911, or by any other higher appellate authority; I of 1894 Ben Act V of 1911.

(*b*) in the case of land and buildings acquired by private treaty, the purchase price of such land or buildings;

(*c*) in the case of land and buildings taken for an improvement scheme under section 54 or section 55 of the Calcutta Improvement Act, 1911, such amount as may be determined under either of those sections, and

(*d*) in any other case, including the erection of any new structures subsequent to the acquisition, such valuation as may be determined by the Executive Officer.

No remission for vacancy in the case of land or building belonging to the Board

**129.** Notwithstanding anything contained in sections 151 to 156, and subject to the provisions of section 128, when any land or building belonging to the Board is valued under section 128, no remission or refund of the consolidated rate assessed in respect of such land or building shall be allowed on

*(Part IV.—Chapter X.—The consolidated rate.—Sections 130, 131.)*

the ground that it is unoccupied, but both the owner's and the occupier's share of the consolidated rate shall be payable in full as long as such land or building belongs to the Board and is assessed under section 128.

Revaluation of land or building vested in the Board after execution of an improvement scheme.

**130.** When the Board has executed any scheme referred to in section 128, and the streets (if any) laid out or altered and the open spaces (if any) provided in executing such scheme have vested in the Corporation under section 65 of the Calcutta Improvement Act, 1911, the valuation made under section 128 shall terminate, and any land or building acquired by purchase or otherwise by the Board for the execution of such scheme and remaining vested in the Board at the termination of such valuation shall be revalued under section 127, and such revaluation shall remain in force for such period as remains unexpired in the ward in which it is included

Ben Act V of 1911

Assessment of annual value, and duration of assessment.

**131.** (*1*) The valuation of any land or building situated in the several wards, the respective numbers, names and boundaries of which are specified in Schedule VII, which has been made before the commencement of this Act, whether under the Bengal Municipal Act, 1884 or under the Calcutta Municipal Act, 1899 and which is in force at the commencement of this Act, shall remain in force and shall be deemed to be the valuation for the assessment of the consolidated rate on such land or building under this Act, until such time as the Executive Officer may make a fresh valuation of the lands and buildings in each such ward under this Act, and the annual value of such lands and buildings in each such ward shall, after such assessment has been made by the Executive Officer, have effect for a period of six years and may be revised thereafter by the Executive Officer at the termination of successive periods of six years.

Ben Act III of 1884
Ben Act III of 1899

(*2*) Notwithstanding anything contained in sub-section (*1*), the following conditions shall apply in the several cases hereinafter specified, namely,—

*Bustees*

(*a*) *bustees* with the huts upon them may be valued annually at the discretion of the Executive Officer, and shall be so valued on the application of the owner; and when such *bustees* are not re-valued, the former valuation shall remain in force from year to year until a re-valuation is made;

Unvalued lands and buildings

(*b*) any land or building the valuation of which has been cancelled on the ground of irregularity, or which for any other reason has no annual value assigned to it under this Act, may be valued by the Executive Officer at any time during the currency of the period prescribed in respect of such land or building by sub-section (*1*), and such valuation shall remain in force, and the consolidated rate shall be levied according to it, for the unexpired portion of such period;

*(Part IV.—Chapter X.—The consolidated rate.—Section 131.)*

Alterations and improvements

(c) if, during the currency of any period prescribed by sub-section (1), any substantial alteration and improvement is made in any building the Executive Officer may cause such building to be re-valued; and such re-valuation shall remain in force, and the consolidated rate shall be levied according to it, until the expiration of the said period;

New buildings

(d) if, during the currency of any period prescribed by sub-section (1), any new building is erected, the Executive Officer may cause such building to be valued; and such valuation shall remain in force, and the consolidated rate shall be levied according to it, until the expiration of the said period;

Depreciation

(e) if, during the currency of any period prescribed by sub-section (1), the value of any building is reduced by reason of any substantial demolition or suffers depreciation from any cause proved to the satisfaction of the Executive Officer to have been beyond the control of the owner or occupier thereof, the Executive Officer shall, as soon as practicable, on application being made to him in writing by the owner or occupier of such building, cause it to be re-valued, and such re-valuation shall remain in force from the beginning of the quarter next following the date of the application, and the consolidated rate shall be levied according to it, until the expiration of the said period;

Alterations and improvements after re valuation

(f) if any building has been re-valued under clause (e) and any substantial alteration and improvement is made in the building during the currency of the period prescribed by that clause for the continuance of such re-valuation, the Executive Officer may cause a new valuation of such building to be made; and such new valuation shall remain in force, and the consolidated rate shall be levied according to it, until the expiration of the said period;

Acquisition by the Calcutta Improvement Trust

(g) if, during the currency of any period mentioned in sub-section (1), the ownership of any portion of any building or land be acquired by purchase or otherwise by the Board of Trustees for the Improvement of Calcutta, the Executive Officer shall, on the application of the Board, divide the assessment of such building or land in the following manner, namely,—

(a) the Executive Officer shall determine what proportion of the assessment of such building or land shall remain assessed upon the residue of the building or land not so acquired, and such proportion shall from the date of acquisition until the expiration of the aforementioned period be deemed to be the assessment of such residue of the building or land;

*(Part IV.—Chapter X.—The consolidated rate.—Sections 132, 133.)*

(*b*) the valuation of the portion of the building or land acquired by the Board shall be fixed in the manner hereinbefore prescribed in section 128, and until such valuation comes into force the Board shall be held liable for the consolidated rate due for such portion, and the amount due shall be deemed to be the amount of rates paid on the whole building or land prior to acquisition, less the amount for which the residual owner is made liable under sub-clause (*a*) of this clause;

Transfer by the Calcutta Improvement Trust

(*h*) if, during the currency of any valuation mentioned in section 128 or section 130, any building or land, or portion thereof, vested in the Board be sold or otherwise transferred by the Board, except under section 65 of the Calcutta Improvement Act, 1911, the Executive Officer may cause the same to be re-valued under section 127, and such re-valuation shall be in force, and the consolidated rate shall be levied according to it, with effect from the quarter following the date of sale or transfer, until the expiration of the period mentioned in sub-section (*1*), Ben Act V of 1911

Acquisition by the Calcutta Improvement Trust for the execution of an improvement scheme

(*i*) if any re-valuation be made under clause (*h*), the Board shall be entitled to a reduction in the total assessment fixed upon the buildings and lands acquired by it for the execution of an improvement scheme for the purposes of the Calcutta Improvement Act, 1911, to the extent of one-half of the annual valuation of the land or building, or portion thereof, thus transferred by the Board, from the quarter from which such re-valuation is fixed under section 127 Ben Act V of 1911

Separate valuation of land and huts in case of a *bustee*

**132.** For the purpose of levying the consolidated rate in the case of a *bustee*, the Executive Officer shall cause the land contained within the *bustee* and the huts standing on it to be valued separately.

Assessment in case of land or building subdivided into separate shares

**133.** If, during the currency of any period prescribed by sub-section (*1*) of section 131, the ownership of any land or building, or portion thereof, is subdivided into separate shares, the Executive Officer, may on the application of any of the co-owners, divide the assessment of such land, building or portion in the following manner, namely.—

(*i*) if the ownership be subdivided into two or more shares without separate allotments, or if as the result of such subdivision there is a separate allotment of such land, building or portion into two or more separate portions, which are not entirely independent and capable of separate enjoyment, the Executive Officer may, if he thinks fit, apportion the assessment among the share-holders according to the value of their respective shares without assigning any separate number;

*(Part IV.—Chapter X.—The consolidated rate.—Sections 134, 135.)*

(*ii*) if, as the result of such subdivision, there are separate allotments of such land, building or portion and if such allotments are made entirely independent and capable of separate enjoyment but not in conformity with the provisions of this Act, or of any rules or by-laws made thereunder, relating to buildings, the Executive Officer may, if he thinks fit, assess such portions separately after assigning to them separate numbers under this chapter:

Provided that by such separate assessment the total assessment for the entire premises shall not be increased:

(*iii*) if such separated portions of such land, building or portion are, or are made, entirely independent and capable of separate enjoyment in conformity with the provisions of this Act, or of any rules or by-laws made thereunder, relating to buildings, the Executive Officer shall assess each portion separately by assigning a separate number thereto

Provided that by such separate assessment the total assessment for the entire premises shall not be increased.

Provided also that such apportionment or separation of the numbers and assessment, as the case may be, shall remain in force and the consolidated rate shall be levied accordingly until the expiration of the said period.

Assessment in case of amalgamation of premises

**134.** If any land or building, bearing two or more municipal numbers, or portions thereof, be amalgamated into one or more new premises, the Executive Officer shall assess them, on amalgamation, after assigning to them one or more numbers, as the case may be, for the purposes of this chapter:

Provided that no assessment on amalgamation of premises shall be made by the Executive Officer unless there is a cause for the re-valuation of any of such premises except on an application being made to him by the owner or owners thereof, in which case such assessment, if made, shall remain in force for the unexpired period of the valuation of the ward in which the said premises are included:

Provided also that the total assessment on amalgamation shall not be greater than the sum of the previous assessments of the several premises amalgamated.

Power to Executive Officer separately to assess outhouses and portions of buildings.

**135.** The Executive Officer may, in his discretion assess any outhouse appurtenant to a building, or any portion of a building, separately from such building or the other portions of such building, as the case may be; and, when any outhouse or portion of a building is so separately assessed, the same shall, for the purposes of this chapter, be deemed to be a separate building.

*(Part IV.—Chapter X.—The consolidated rate.—Sections 136—139.)*

Returns and inspection for purpose of valuation.

**136.** (*1*) The Executive Officer may, by written notice, require the owner or occupier of any land or building to furnish him, within a fortnight after the service of the notice, with returns of the measurements and of the rent or annual value of the land or building.

(*2*) Every owner and occupier on whom any such requisition is made shall be bound to comply with the same and to make a true return to the best of his knowledge or belief

(*3*) The Executive Officer, or any person authorized by him in this behalf, may inspect, survey and measure such land or building.

Public notice and inspection of valuations

**137.** (*1*) When the valuation, under section 131 of the lands and buildings in any ward has been completed, the Executive Officer shall cause the respective valuations to be entered in a list and give public notice of the place where such list may be inspected.

(*2*) Such notice shall be by advertisement in local newspapers, and also by placards posted up in conspicuous places throughout such ward

(*3*) The Executive Officer shall also cause a placard to be posted up in each *bustee*, showing separately for each building situated in the *bustee* the valuation assigned to it in the valuation list.

(*4*) The person having custody of the valuation list shall permit any person to inspect it and to make extracts from it.

(*5*) No fee shall be charged for any such inspection, but there shall be payable, by all persons other than owners or occupiers of land in the ward and their agents, a fee of one rupee in respect of each entry extracted.

Notice when valuation made for the first time or increased

**138.** The Executive Officer shall, in all cases in which any land, *bustee* or building is for the first time valued, or in which the valuation of any land, *bustee* or building previously valued is increased under section 131, give special notice thereof to the owner or occupier of the same; and when the valuation is so increased, the said notice shall contain a statement of the grounds of such increase.

Notice of objection to valuation.

**139.** (*1*) Any person who is dissatisfied with a valuation made under this chapter may deliver at the municipal office a written notice stating the grounds of his objection to such valuation.

(*2*) Such notice shall be delivered within fifteen days after the publication of the notice referred to in section 137, or after receipt of the notice referred to in section 138, if such notice is received after the publication of the notice referred to in section 137;

Provided that the Executive Officer may, if he thinks fit, extend the said period of fifteen days to a period not exceeding one month.

*(Part IV.—Chapter X.—The consolidated rate.—Sections 140—143.)*

Entry of objection and investigation thereof by Executive Officer or Deputy Executive Officer.

**140.** (*1*) All such objections shall be entered in a register to be maintained for the purpose; and, on receipt of any objection, notice shall be given to the objector of a time and place at which his objection will be investigated.

(*2*) At the said time and place the Executive Officer or a Deputy Executive Officer shall hear the objection, in the presence of the objector or his agent if he appears, or may, for reasonable cause, adjourn the investigation.

(*3*) When the objection has been determined, the order passed shall be recorded in the said register, together with the date of such order.

Appeal to Small Cause Court

**141.** (*1*) Any person dissatisfied with the order passed on his objection may appeal to the Court of Small Causes having jurisdiction in the place where the land or building, to the valuation of which the objection was made, is situated.

(*2*) Such appeal shall be presented to such Court of Small Causes within thirty days from the date of the order passed under section 140, and shall be accompanied by an extract from the register of objections containing the order objected to.

(*3*) The provisions of Parts II and III of the Indian Limitation Act, 1908, relating to appeals, shall apply to every appeal preferred under this section. IX of 1908

(*4*) No appeal shall be admitted under this section unless an objection has first been determined under section 140.

Valuations, when to be final

**142.** (*1*) Every valuation made by the Executive Officer under section 131 shall, subject to the provisions of sections 139, 140 and 141, be final

(*2*) Every order passed by the Executive Officer or Deputy Executive Officer under section 140 shall, subject to the provisions of section 141 be final.

(*3*) An appeal from a decision made by the Court of Small Causes under section 141 shall lie to the High Court.

Keeping of municipal assessment book

**143.** (*1*) The annual value fixed under this chapter shall be entered in one or more books to be kept for the purpose at the municipal office, wherein shall also be recorded—

(*a*) the number of each premises;

(*b*) the description of each premises;

(*c*) the name and place of abode of the owner and the name of the occupier;

(*d*) the amount of the valuation;

(*e*) the amount payable quarterly on account of the consolidated rate;

(*f*) the fact of exemption (if any) from payment of the said rate; and

(*g*) such other particulars (if any) as the Executive Officer may from time to time direct.

*(Part IV.—Chapter X.—The consolidated rate.—Sections 144—146.)*

(2) The particulars mentioned in sub-section (1) may be contained in as many books as the Executive Officer may from time to time determine, which shall together constitute the municipal assessment-book.

(3) When the name of the owner or occupier of any premises is not known, it shall be sufficient to designate him in the said assessment-book as "the owner" or "the occupier", as the case may be.

Entry of names of owners and occupiers in assessment book

**144.** (1) Any owner or occupier may at any time apply to the Executive Officer to have his name entered as owner or occupier, as the case may be, in the assessment-book; and the Executive Officer shall, after giving the parties interested an opportunity of being heard, unless there is sufficient reason to refuse such application, cause such name to be entered in the assessment-book.

Provided that if such application is refused, the reason for the refusal shall be recorded in writing.

(2) Where there are gradations of owners or occupiers, and doubt exists as to who is entitled to have his name entered in the assessment-book as owner or occupier of the premises, the Executive Officer shall, after giving the parties interested an opportunity of being heard, determine which of the several owners or occupiers is so entitled, and his decision shall remain in force for the purposes of this Act unless and until it is set aside by the order of a competent Court.

(3) No owner or occupier whose name is not entered in the assessment-book shall be entitled to object that any bill, notice of demand, warrant or other notice of any kind required by this Act to be served on the owner or occupier of any land or building, has not been made out in his own name.

Notice of transfers of title, when to be given

**145.** Whenever the title in any land or building, or in any part or share of any land or building, is transferred, the transferee shall, within three months after the execution of the instrument of transfer, or, if no such instrument be executed, after the transfer is effected, give notice in writing of such transfer to the Executive Officer:

Provided that in the event of the death of the person in whom such title vests, the person to whom, as heir or otherwise, the title of the deceased is transferred by descent or devise, shall, within one year from the death of the deceased, give notice in writing of such transfer to the Executive Officer.

Power to Executive Officer to amend assessment-book

**146.** (1) Notwithstanding anything contained in section 142, the Executive Officer may at any time amend the assessment-book—

(a) by inserting therein the name of any person whose name ought, in his opinion, to be so inserted, or by inserting any land or building which is, in his opinion, liable to the consolidated rate, or by inserting a valuation when the land or building liable to be valued has not been valued; or

*(Part IV.—Chapter X.—The consolidated rate.—Sections 147, 148.)*

(*b*) by striking out the name of any person, or by striking out any land or building which is, in his opinion, not liable to the consolidated rate, or by reducing the amount of any valuation; or

(*c*) by increasing the amount of the valuation of any premises where, in his opinion, such premises, at the time of the last general valuation, have been substantially undervalued by reason of misrepresentation or fraud:

Provided that, whenever it is proposed to make any amendment under clause (*a*), notice shall be given to persons interested of a day, not being less than fifteen days from the service of the notice, on which it is intended to make the amendment

Provided also as follows:—

(*i*) no amendment shall be made under clause (*c*) except by the Executive Officer; and

(*ii*) whenever it is proposed to make any such amendment, notice shall be given to the owner and occupier of the premises concerned of a day, not being less than fifteen days from the service of the notice, on which it is intended to make the amendment; and

(*iii*) clause (*c*) shall not apply to any valuation of any premises determined on appeal to the Court of Small Causes or to the High Court as the case may be,

(*2*) If any amendment be made under clause (*a*) or clause (*c*) of sub-section (*1*), any person on whom a notice is to be served under the first or second proviso to sub-section (*1*), may object by written application to the Executive Officer, to be delivered at the municipal office three clear days before the day fixed in the said notice; and the provisions of sections 139 to 142 shall, with all necessary modifications, be deemed to apply to such objection.

Period for which revised valuations to continue in force

**147.** When the valuation of any land or building is revised in consequence of an objection made under section 139 or section 146, sub-section (*2*), or an appeal is preferred under section 141, the revised valuation shall take effect from the quarter in which the first-mentioned valuation would have taken effect, and shall continue in force for the period for which the said first-mentioned valuation was made, and no longer.

Effect of entries in assessment-book

**148.** (*1*) The assessment calculated on the valuation for the time being shown in the assessment-book shall be deemed to be the amount payable during the whole period for which the valuation is in force.

(*2*) When any amendment has been made in the assessment-book, such period shall, unless otherwise specially provided, be calculated—

(*a*) from the commencement of the quarter next succeeding that in which the notice of objection was delivered under section 139 or section 146, sub-section (*2*); or,

*(Part IV.—Chapter X.—The consolidated rate.—Sections 149—151.)*

(*b*) if no such notice has been delivered, then from the commencement of the quarter next succeeding that in which such amendment was made :

Provided that the old valuation shall, notwithstanding that the period for which it was made may have expired, continue in force until the commencement of the quarter referred to in clause (*a*) or clause (*b*), as the case may be.

*Payment and recovery of the consolidated rate.*

Payment of consolidated rate

**149.** One-half of the consolidated rate shall be payable by the owners of the lands and buildings, and the other half by the occupiers thereof ; and each such instalment shall be payable on or before the fifteenth day of April, the fifteenth day of July, the fifteenth day of October and the fifteenth day of January for the quarters respectively commencing on the first day of each of those months.

Recovery by owner from tenant in certain cases of part of the owner's share of the consolidated rate

**150.** If the annual value of any land or building, as determined under this chapter, exceeds in any case the amount of the rent payable to the owner for the land or building,

the owner may in such case, notwithstanding anything contained in any other law for the time being in force in Bengal, recover from the person who pays him rent the difference between the sum assessed as the owner's share of the consolidated rate in respect of such land or building and the sum at which such share would have been assessed had the land or building been valued only at the amount of rent actually payable to the owner,

and such difference shall be added to the rent and shall be recoverable as rent by the owner from the person liable for the payment of the rent.

Refund of owner's share of consolidated rate for period of vacancy

**151.** When any land or building which has been assessed to the consolidated rate has remained unoccupied and unproductive of rent for a period of sixty or more consecutive days and a written notice of the facts has been given to the Executive Officer, he shall—

(*a*) remit one-half of the owner's share of the consolidated rate due on account of such period, or,

(*b*) if the whole of such share has been paid, refund, on application made therefor, one-half of such share :

Provided that, when any land not being *wakf* or *debutter* property, which in the opinion of the Corporation is suitable for a building site, is not adequately utilized for such a purpose for a period of more than three years, the right to a remission of the consolidated rate for a vacancy in this respect, although the land is not occupied and is not productive of rent, shall cease on the expiration of such period, unless the Corporation exempt

*(Part IV.—Chapter X:—The consolidated rate.—Sections 152—158.)*

such land from the operation of this proviso on the ground that it is necessary for the land to be left open for the purpose of ventilation, or that in their opinion special circumstances exist which render it impracticable for the owner or lessee to utilize the land as a building site.

Refund of occupier's share of consolidated rate

**152.** Any person who has, in respect of any land or building which has been assessed to the consolidated rate, paid the occupier's share of such rate for the whole of any quarter, shall be entitled to a refund of the rate so paid for any period in that quarter during which he did not occupy such land or building, provided that such person has given notice in writing of the facts to the Executive Officer.

Notice under section 151 or section 152, when to be delivered

**153.** Every notice referred to in section 151 or section 152 shall be given during the period for which the land or building is unoccupied and unproductive of rent, or during the period of the vacancy, as the case may be; and such period shall be calculated from the date on which such notice is delivered at the municipal office:

Provided that, if the notice is delivered within seven days of the vacancy, the remission shall be allowed with effect from the date of the vacancy.

Application for refund, when to be made

**154.** No refund of any amount shall be made under section 151 or section 152 unless the same is applied for within one year from the date on which the amount was paid.

Notice of re-occupation, when to be given

**155.** Whenever any land or building which has been assessed to the consolidated rate and has been unoccupied is re-occupied, the person liable to pay the owner's share of the rate in respect of such land or building shall, within fifteen days from the date of re-occupation, give notice thereof in writing to the Executive Officer.

Rate payable from date of re-occupation

**156.** Whenever any land or building which has been assessed to the consolidated rate and has been unoccupied is re-occupied during any quarter, the occupier's share of the rate in respect of such land or building shall be payable from the date of such re-occupation.

Power of Executive Officer to levy entire rate from owner in certain cases

**157.** If any land or building is ordinarily occupied by more than one person holding in severalty, or is valued at less than two hundred rupees, the Executive Officer may, notwithstanding anything contained in section 149, levy the entire consolidated rate from the owner of such land or building.

Recovery from occupier of portion of rate paid by owner under section 157.

**158.** When the entire consolidated rate is paid by the owner of any land or building under section 157, such owner may, if there be but one occupier of the land or building, recover from such occupier half of the rate so paid, and may, if there be more than one occupier, recover from each occupier half of such sum as bears to the entire amount of rate so paid by the owner the same proportion as the value of the portion of the land or building in the occupation of such occupier bears to the entire value of such land or building.

*(Part IV.—Chapter X.—The consolidated rate.—Sections 159—163.)*

Consolidated rate to be paid by owner of a *bustee*

**159.** (*1*) Notwithstanding anything contained in section 149, the entire consolidated rate leviable upon a *bustee* shall, after deducting therefrom a sum equal to one-eighth of such rate, be paid by the owner of such *bustee*

Provided that if the owner of the *bustee* is also the owner of the huts therein, no such deduction shall be made.

(*2*) Whenever the consolidated rate is leviable upon a *bustee*, the owner of the land contained within such *bustee* may recover from the owner of each hut standing thereon—

(*i*) one-half of the consolidated rate payable in respect of the land on which the hut stands;

(*ii*) the entire consolidated rate payable in respect of the hut.

(*3*) The sum deducted under sub-section (*1*) shall be retained by the owner of the *bustee*—

(*a*) as a set-off against the expenses which may be incurred in collecting the portion of the rate recoverable under sub-section (*2*) from the owners of huts, and

(*b*) as a commutation of all refunds in respect of huts which are vacant or which may be removed or destroyed during the continuance of the period for which the rate is leviable.

Consolidated rate not payable on new or enlarged huts in a *bustee*

**160.** The consolidated rate shall not be payable on account of any new huts built or any huts enlarged in a *bustee* during the year for which the valuation of the *bustee* remains in force under clause (*a*) of sub-section (*2*) of section 131.

Power to Corporation to except *bustee* from section 159

**161.** The Corporation may, by order, from time to time and for such period as may be specified in the order, except any *bustee* or any part of a *bustee* from the operation of section 159; and while any such order is in force in respect of any *bustee* or part thereof, the other provisions of this Act as to the payment and recovery of the consolidated rate shall apply to such *bustee* or part.

Requisition for name of owner

**162.** The Executive Officer may, by written notice, require the occupier of any land or building to furnish him within fifteen days with the name and address of the owner of such land or building.

Occupier liable to owner's rate on failure to furnish owner's name and address

**163.** If the occupier of any land or building refuses or neglects to comply with a notice served under section 162, he shall be liable to pay the rate payable by the owner on account of such land or building; and, on non-payment thereof, the Executive Officer may recover the same by distress and sale of any movable property found on the land or in the building:

Provided that no arrear of the rate which has remained due from the owner of any land or building for more than one year shall be so recovered from the occupier thereof.

*(Part IV.—Chapter X.—The consolidated rate.—Section 164.)*

Payment of consolidated rate, how affected by objections to valuation

**164.** (*1*) When an objection to a valuation has been made under section 139, the consolidated rate shall, pending the final determination of the objection, be paid on the previous valuation.

(*2*) If, when the objection has been finally determined, the previous valuation is altered, then—

(*a*) any sum paid in excess shall be refunded or allowed to be set off against any present or future demand of the Corporation under this Act, and

(*b*) any deficiency shall be deemed to be an arrear of the consolidated rate and shall be payable and recoverable as such :

Provided that—

(*i*) if any premises have, for the purposes of valuation under section 131, been for the first time valued or subdivided or amalgamated with any other premises, and an objection to the valuation thereof has been made under section 139, then the consolidated rate shall, pending the final determination of the objection, be paid on such valuation; and

(*ii*) if, when such objection has been finally determined, such valuation is reduced, and if the consolidated rate has already been paid thereon, then the sum paid in excess shall be refunded or allowed to be set off against any present or future demand of the Corporation under this Act.

*(Part IV.)*

## CHAPTER XI.

### TAX ON CARRIAGES AND ANIMALS.

*Carriages and animals specified in Schedule VIII.*

Tax on carriages and animals as specified in Schedule VIII

**165.** (*1*) A tax, at rates not exceeding those respectively prescribed in Schedule VIII, shall be imposed upon all carriages and animals specified in that schedule and kept or used in Calcutta, except—

(*a*) carriages kept for sale by *bona fide* dealers in such carriages and not used for any other purpose;

(*b*) carriages and animals belonging to the Government and maintained—

(*i*) for the use of the Governor of Bengal or his staff or household; or

(*ii*) for police or military purposes,

(*c*) carriages and animals maintained by any authority for the purposes of a fire-brigade;

(*d*) carriages and animals certified by the Commissioner of Police to be ordinarily used by the owners thereof for police purposes;

(*e*) tram-cars employed in working street tramways, and exempted under any contract with the Corporation; and

(*f*) horses which any person exempted from the operation of any municipal tax by an order issued under section 3 of the Municipal Taxation Act, 1881, is bound by the regulations of the service to which he belongs, to keep. XI of 1881.

(*2*) The rates at which the said tax is to be imposed shall be determined annually in the budget estimate prepared under Chapter VII.

Tax, when payable.

**166.** The tax imposed under section 165 shall be payable half-yearly in advance.

Obligation to furnish statements, and payment and remission of tax.

**167.** (*1*) The owner or the person in charge of any carriage or animal liable to the tax imposed under section 165 shall, before the first day of May and the first day of November in each year,—

(*a*) forward to the municipal office a written statement, signed by him, containing a description of all carriages and animals owned by him or in his charge which are so liable, and

(*b*) at the same time pay to the Corporation the tax payable for the current half-year in respect of the carriages and animals specified in such statement.

(*2*) Any person who becomes the owner or takes charge during any half-year of any carriage or animal liable to the tax imposed under section 165 shall,

*(Part IV.—Chapter XI.—Tax on carriages and animals.—Sections 168—170.)*

within one week of his so becoming owner or taking charge,—

(*i*) forward to the municipal office a statement of the kind mentioned in clause (*a*) of sub-section (*1*), and

(*ii*) at the same time, pay to the Corporation the tax payable in respect of such carriage or animal for the whole of the said half-year:

Provided that the tax payable in respect of any carriage or animal shall not be levied twice for the same half-year

(*3*) If the Corporation are satisfied—

(*i*) that any carriage liable to such tax has not been used during the half-year, or

(*ii*) that any carriage or animal liable to such tax has been kept for only a portion of the half-year,

they may refund or remit the whole of the tax payable in respect of such carriage or animal for the said half-year or such portion of such tax as they may think fit.

(*4*) For the purpose of this section a livery stable-keeper shall be deemed to be the owner or to be in charge of every carriage or animal in his stables.

Power to Corporation to require occupier to furnish statements

**168.** The Corporation may from time to time, by written notice, require the occupier of any land or building to forward to them a statement, signed by such occupier, containing—

(*i*) the name and address of every person who owns or is in charge of any carriage or animal which is kept in or on such land or building and is liable to the tax imposed under section 165, and

(*ii*) a description of all such carriages and animals.

Grant of license on payment of tax.

**169.** (*1*) When any person pays to the Corporation the amount of the tax imposed under section 165 which is payable in respect of all carriages and animals kept by him, the Corporation shall grant him a license to keep such carriages and animals during the current half-year, and no longer.

(*2*) The Corporation may at any time grant a similar license for any previous half-year for which no license has been taken out, on payment of the amount due for that half-year:

Provided that the production of such a license shall not afford a valid defence if the licensee is prosecuted for failing to take out a license within the time required by this Act.

Power to Corporation to compound with livery stable-keepers, etc., for tax.

**170.** The Corporation may, in their discretion, compound, for any period not exceeding one year, with any livery stable-keeper or other person keeping carriages for hire, or animals for sale or hire, for

*(Part IV.—Chapter XI.—Tax on carriages and animals.—Sections 171—173.)*

a certain sum to be paid in respect of the carriages or animals so kept by such persons in lieu of the tax imposed thereon under section 165.

Power to Corporation to require production of books and accounts by livery stable-keeper

**171.** The Corporation may, by written notice, require any person who carries on the trade or business of a livery stable-keeper to produce, for their inspection, all books and accounts relating to such trade or business

Power to Corporation to inspect any premises in pursuance of provisions of this chapter, and to seize and dispose of carriages and animals.

**172.** (*1*) The Corporation may inspect any stable, coach-house or other place for any of the purposes, or in pursuance of any of the provisions, of this chapter.

(*2*) If, on such inspection, any carriage or animal is found in respect of which no license has been obtained, the Corporation—

(*a*) may, if the owner or person in charge of such carriage or animal is unknown, take possession of such carriage or animal, and

(*b*) shall thereupon make such order as they may think fit respecting the custody of such carriage or animal.

(*3*) If any person, within one month from the date of such order, establishes, to the satisfaction of the Corporation, his claim to the possession of such carriage or animal, the Corporation shall order it to be delivered to him on payment of the tax due, together with such costs as the Corporation have reasonably incurred in taking possession of and keeping the same.

(*4*) If no person within the said period satisfies the Corporation that he is entitled to the possession of such carriage or animal, the Corporation may—

(*i*) cause the same to be sold for the recovery of the tax and costs referred to in sub-section (*3*), and

(*ii*) order the sale-proceeds, after deducting therefrom the said tax and costs (together with the costs of the sale), to be paid to any person who, within six months from the date of such sale, establishes, to the satisfaction of the Corporation, his claim to such proceeds.

*Dogs.*

Tax on dogs.

**173.** (*1*) A tax not exceeding five rupees *per annum* shall be imposed upon every dog kept in Calcutta :

Provided that the Executive Officer may in his discretion exempt from the tax any dog which appears to him to be less than six months of age until in his opinion it shall reach that age.

(*2*) Such tax shall be payable yearly in advance, and the rate at which it is to be imposed shall be determined annually in the Budget Estimate prepared under Chapter VII.

*(Part IV.—Chapter XI.—Tax on carriages and animals.—Section 174.)*

(3) The owner or person in charge of any dog liable to the tax imposed under sub-section (1) shall, before the first day of May in each year,—

(a) forward to the municipal office a list, signed by him, of all dogs owned by him or in his charge which are so liable, and

(b) at the same time pay to the Corporation the tax payable for the current year in respect of every such dog.

(4) Any person who, in the course of any year, becomes the owner or takes charge of any dog shall, within one week of his so becoming owner or taking charge, furnish a like statement and pay to the Corporation the tax payable for that year in respect of such dog:

Provided that the tax payable in respect of any dog shall not be levied twice for the same year.

License and number-ticket for, and disposal of, dogs.

**174.** (1) When any person has paid to the Corporation the tax payable in respect of any dog, the Corporation shall—

(a) grant him a license to keep such dog during the current year, and

(b) provide him with a number-ticket, the number whereof shall be specified in the said license.

(2) The owner or person in charge of any dog so licensed shall at all times cause the said number-ticket to be kept attached to the collar or otherwise suspended from the neck of the dog.

(3) Any dog which has no such number-ticket for the then current year so attached or suspended—

(i) shall be presumed to be an unlicensed dog, and

(ii) may be seized by the police or by any person duly authorized by the Corporation in this behalf, and detained until the tax due (if any) has been paid.

(4) If any person, within seven days from the date of such seizure, satisfies the Corporation that he is the owner or keeper of such dog, the Corporation shall order it to be delivered to such person on payment of the tax due (if any), together with the costs incurred by the Corporation in keeping the dog.

(5) If, within the said seven days, no person satisfies the Corporation that he is the owner or keeper of the dog or pays the said tax and costs, the Corporation may cause the dog, either—

(a) to be destroyed, or

(b) to be sold and the sale-proceeds, after deducting therefrom the said tax and costs (together with the costs of the sale) to be paid to any person who, within six months from the date of such sale, establishes, to the satisfaction of the Corporation, his claim to such proceeds.

(*Part IV.*)

## CHAPTER XII.

### TAX ON PROFESSIONS, TRADES AND CALLINGS.

Licenses to be taken out annually

**175.** Every person who exercises or carries on in Calcutta, either by himself or by an agent or representative, any of the professions, trades or callings indicated in Schedule VI, shall annually take out a license and pay for the same such fee as is mentioned in that behalf in the said schedule:

Provided that the grant of such a license shall not be deemed to affect the liability of the licensee to take out a license under any other section of this Act:

Provided also that the Corporation may—

(*a*) remit or refund any portion of the fee so payable in respect of the exercise or carrying on of any profession, trade or calling, if they are satisfied that the profession, trade or calling has been exercised or carried on for six consecutive months only; or,

(*b*) when any person is, in the opinion of the Corporation, unable to pay the fee due for a license, exempt him from liability to take out such license, or declare that he shall be entitled to take out a license under a lower class than that under which he is chargeable according to the said schedule, or;

(*c*) in any other case, exempt any person from liability to take out a license or declare that any person shall be entitled to take out a license under a lower class than before.

Grant and contents of licenses.

**176.** (*1*) Every license mentioned in section 175 shall, in addition to the particulars required by section 498, sub-section (*1*), specify—

(*a*) the profession, trade or calling in respect of which it is granted; and

(*b*) if the license is a local license as defined in rule 2 of Schedule VI, the place of business where the said profession, trade or calling is exercised or carried on.

(*2*) The Corporation may at any time grant a license for any previous year for which no license has been taken out, on payment of the fee which would have been payable therefor in the first instance:

Provided that the production of such a license shall not afford a valid defence if the licensee is prosecuted for failing to take out a license within the time required by this Act.

*(Part IV.—Chapter XII.—Tax on professions, trades and callings.—Sections 177, 178.)*

Liability and class, how to be determined.

**177.** The liability of any person to take out a license, and the class under which he shall be deemed bound to take out a license, shall be determined in accordance with the rules contained in Schedule VI.

Power to Corporation to require list of persons

**178.** The Corporation may, by written notice, require the occupier of any building or place of business to forward to them within seven days a list, signed by such occupier, of the names of all persons exercising or carrying on any profession, trade or calling therein, and of their respective professions, trades and callings.

(*Part IV.*)

## CHAPTER XIII.

### SCAVENGING-TAX.

License to be taken out half-yearly, and fee to be paid therefor

**179.** Every person who exercises in Calcutta any of the callings indicated in Part I of Schedule IX shall every half-year take out a license and pay for the same a fee, to be calculated—

(*a*) according to the average number of animals kept by him in the exercise of such calling, as determined from time to time by the Corporation, or

(*b*) in the case of the owner or occupier of a market, according to the average quantity of offensive matter and rubbish removed daily, as determined from time to time by the Corporation,

at the rates mentioned in Part II of the said schedule:

Provided that the Corporation may remit or refund the whole or any portion of the fee so payable by any person in respect of any half-year if they are satisfied that such person himself removes the offensive matter and rubbish accumulating on his premises or has exercised his said calling for a portion only of such half-year.

Grant and contents of licenses.

**180.** (*1*) Every license mentioned in section 179 shall, in addition to the particulars required by section 498, sub-section (*1*), specify—

(*a*) the calling in respect of which it is granted; and

(*b*) the animals in respect of which it is granted, or, in the case of a market, the average quantity of offensive matter and rubbish removed daily, as determined by the Corporation.

(*2*) Every such license shall be taken out not later than the first day of June or the first day of December in each year, as the case may be.

*(Part IV.)*

## CHAPTER XIV.

### TAX ON PETROLEUM.

Control by Corporation of storage and taxation of petroleum

**181.** (*1*) The Corporation may, by notification in the *Calcutta Gazette* and with the previous sanction of the Local Government, prohibit the introduction into Calcutta, for the purpose of storage therein, of petroleum intended for consumption elsewhere.

(*2*) No person shall introduce petroleum into Calcutta in contravention of any notification published under sub-section (*1*).

(*3*) When any such notification has been published, a tax not exceeding four annas for every ten gallons may, with the sanction of the Local Government, be imposed in the manner provided by Chapter VII, on all petroleum introduced into Calcutta for consumption therein.

Confiscation of petroleum

**182.** (*1*) All petroleum introduced into Calcutta in contravention of any notification published under section 181, sub-section (*1*), or of any by-law made under clause (*2*) of section 478, may be seized and confiscated.

(*2*) All petroleum confiscated under this section shall become the property of the Corporation.

(*Part IV.*)

## CHAPTER XV.

### TAX ON CARTS.

Registration and numbering of carts

**183.** (*1*) Every cart kept or used in Calcutta or the Municipality of Howrah except—

(*a*) carts which are the property of the Government,

(*b*) carts which are the property of the Corporation of Calcutta, of the Commissioners of the Municipality of Howrah or of any other municipality in the neighbourhood of Calcutta or Howrah, declared by notification under section 185 as being entitled to a share in the cart-registration fees,

(*c*) carts which are kept at any place more than eight miles distant from Government House and are only temporarily and infrequently used in Calcutta or the Municipality of Howrah,

(*d*) carts belonging to the Government and maintained—

(*i*) for the use of the household and establishment of the Governor of Bengal, or

(*ii*) for police or military purposes, and

(*e*) carts maintained by any authority for the purposes of a fire-brigade,

shall be registered at the municipal office with the name and residence of the owner, and the place where the cart is ordinarily kept and shall have a number-plate, showing the number of such registration affixed thereto in such manner as the Corporation may direct.

(*2*) Such registration shall be made, and the said numbers assigned, half-yearly, upon such dates as the Corporation may appoint in that behalf.

(*3*) No person shall keep or be in possession of a cart not duly registered under this section.

(*4*) No owner or driver of a cart shall fail to affix thereto a number-plate as required by sub-section (*1*).

(*5*) The Corporation may refuse to register any cart which fails to conform to the by-laws made in regard to carts under this Act.

(*Part VI.—Chapter XV.—Tax on carts.—Sections 184—186.*)

Fees for registration of carts

**184.** (*1*) The fee payable for each registration under section 183 shall be as follows :—

| | Rs. |
|---|---|
| (*a*) for every cart propelled by mechanical power ... | 20, and a further sum of Rs. 5 per ton of the full carrying capacity of the cart. |
| (*b*) for every trailer (being a cart) drawn by a cart referred to in clause (*a*) ... | 25 |
| (*c*) for every other cart ... | 4 |

and an additional charge of one rupee shall also be payable in each case for the number-plate to be affixed to the cart or trailer:

Provided that, if such number-plate is returned to the municipal office in serviceable condition, the said additional charge shall be refunded or set off against the charge leviable for a new number-plate.

(*2*) The Corporation may, in their discretion, remit any portion of the fee leviable under sub-section (*1*) in respect of any cart if they are satisfied that the same has been kept or used for a portion of the half-year only.

(*3*) When the ownership of any registered cart is transferred during any half-year, it shall be re-registered in the name of the person to whom it has been transferred; and a fee of four annas shall be paid for every such re-registration.

Division of proceeds of registration fees, etc.

**185.** After deduction of the costs incurred on account of the registration of carts and the supply of number-plates under this chapter, the total net proceeds of the fees and charges received by the Corporation for such registration shall be divided between the Corporation of Calcutta and the Commissioners of the Municipality of Howrah and such other municipalities in the neighbourhood of Calcutta or of the Municipality of Howrah as the Local Government shall declare, by notification in the *Calcutta Gazette*, to be entitled to a share in such proceeds, in such proportion as the Local Government may from time to time determine.

Seizure and sale of unregistered carts and application of proceeds of sale.

**186.** (*1*) If any person owns or keeps any cart not duly registered under section 183, the Corporation may seize such cart, together with the animals (if any) drawing it, and detain the same in a place to be appointed by them in this behalf:

Provided that no cart shall be so seized while conveying passengers or goods.

(*2*) If any cart or animals so seized be not claimed within ten days from the date of the seizure, it or they may be sold by auction by order of a Magistrate.

*(Part IV.—Chapter XV.—Tax on carts.—Section 187.)*

(3) The proceeds of such sale may be applied in defraying the expenses incurred on account of the seizure, detention and sale; and the surplus (if any), if not claimed within a period of sixty days from the date of such sale, shall be paid to the credit of the Municipal Fund.

No person to drive cart without a registration ticket.

**187.** (1) No person shall drive a cart without carrying exposed to view a ticket granted by the Corporation bearing the registration number as driver.

(2) The Corporation shall maintain a register of cartmen, authorized to drive carts, which shall contain—

(a) the number of the ticket,

(b) the name, the father's name, the place of abode and age of the person to whom the ticket is granted,

(c) the description of cart such person is authorized to drive, and

(d) the date on which the ticket is granted.

(3) No cartman shall use or wear a ticket granted to him under this section if the number thereon has become indistinct or obliterated, or shall for the purpose of this section use or wear any ticket resembling or intending to resemble a ticket granted under this section, or wear a ticket granted to another cartman.

(4) The Corporation shall, upon the application of any driver of a cart whose ticket has become indistinct or obliterated, supply such driver with a new ticket upon payment of a fee of not more than two annas, or when they are satisfied that a ticket has been lost, may supply a new ticket on payment of a like fee.

(*Part IV.*)

## CHAPTER XVI.

### RECOVERY OF THE CONSOLIDATED RATE AND OTHER TAXES.

Saving of other chapters

**188.** The provisions of this chapter shall be deemed to be in addition to, and not in derogation of, any powers conferred by or under other chapters of this Act for the collection or recovery of the consolidated rate and other taxes.

*The consolidated rate.*

Presentation of bills

**189.** (*1*) When the consolidated rate or any instalment thereof is due, the Corporation shall, with the least practicable delay, cause to be presented to the person liable a bill for the sum due.

(*2*) Every such bill shall specify the period for which, and the premises in respect of which, the rate is charged

(*3*) When any person is liable for the consolidated rate on account of more premises than one, the Corporation may charge to him in one or several bills, as they may think fit, the several sums payable by him as such rate, on account of such premises :

Provided that if such person, by written notice to the Corporation, requests to be furnished with separate bills for such sums, the Corporation shall comply with such request in respect of all payments on account of the said rate for which such person becomes liable after receipt by the Corporation of such notice.

Notice of demand.

**190.** (*1*) If the amount for which any bill has been presented under section 189 is not paid within seven days from such presentation, into the municipal office or to a municipal officer appointed to receive the same, the Corporation may cause to be served upon the person liable a notice of demand in the form in Schedule X, or in a form to the like effect.

(*2*) For every such notice of demand a fee of such amount, not exceeding one rupee, as may in each case be fixed by the Corporation, shall be payable by the said person, and the said amount shall be included in the costs of recovery.

Distraint in Calcutta.

**191.** (*1*) If the person liable for the payment of the consolidated rate does not, within seven days from the service of a notice of demand under section 190, pay the sum due, or show sufficient cause to the satisfaction of the Corporation for non-payment of the same,

such sum, with all costs of recovery, may be recovered under a warrant in the form in Schedule XI, or in a form to the like effect, to be issued by the Corporation—

(*a*) by distress and sale of any movable property belonging to such person, or

*(Part IV.—Chapter XVI.—Recovery of the consolidated rate and other taxes.—Sections 192—195.)*

(*b*) if such person be the occupier of any premises in respect of which the sum is due, by distress and sale of any movable property found on the said premises:

Provided that, when the premises in respect of which the default is committed are a place of business, and the movable property distrained under clause (*b*) is shown to the satisfaction of the Corporation to have been left there (by some person other than the person referred to in that clause) for repairs or safe custody in the ordinary course of business, it shall be released.

(*2*) The movable property of any person liable for the payment of any sum, for the recovery of which a warrant has been issued under sub-section (*1*), may be distrained wherever the same may be found in Calcutta.

(*3*) For every warrant issued under this section, a fee shall be charged at the rate mentioned in that behalf in Schedule XII, and the amount of the said fee shall be included in the costs of recovery.

Power to Corporation to remit certain fees

**192.** The Corporation may, in their discretion, remit the whole or any part of any fee chargeable under section 190, sub-section (*2*), or section 191, sub-section (*3*)

Power to officer to break open door or window

**193.** Any officer charged with the execution of a warrant of distress issued under section 191, may, if authorized by a general or special order in writing by the Corporation, between sunrise and sunset break open any outer or inner door or window of a building in order to make the distress--

(*a*) if he has reasonable ground for believing that such building contains property which is liable to such distress; and

(*b*) if, after notifying his authority and purpose, and duly demanding admittance, he cannot otherwise obtain admittance:

Provided that such officer shall not enter, or break open the door of, any apartment appropriated to the use of females, until he has given not less than three hours' notice of his intention and has given such females an opportunity to withdraw.

Officer executing warrant to make inventory and notice of sale.

**194.** The officer charged with the execution of a warrant of distress issued under section 191, shall forthwith make in the presence of two witnesses an inventory of the movable property which he seizes under such warrant, and shall at the same time give a written notice, in the form in Schedule XIII, or in a form to the like effect, to the person in possession thereof at the time of seizure, that such property will be sold as therein mentioned.

Power to said officer to take away property if forcible removal apprehended

**195.** If there is reason to believe that any property seized under a warrant of distress issued under section 191 is likely, if left in the place where it is found, to be removed by force, the officer executing the warrant may take it to the municipal office or to any place appointed by the Corporation.

*(Part IV.—Chapter XVI.—Recovery of the consolidated rate and other taxes.—Sections 196—199.)*

Distresses to be proportionate to sum distrained for

**196.** The amount of property seized in any distress made under this Act shall not be disproportionate to the amount of the arrears due.

Sale and disposal of proceeds

**197.** (*1*) If a warrant of distress issued under section 191 is not in the meantime suspended by the Corporation or discharged, the movable property seized thereunder shall, after the expiry of the period mentioned in the notice served under section 191, be sold by order of the Corporation.

(*2*) All sales of property under this section shall, so far as may be practicable, be regulated by the procedure for the time being in force in the Court of Small Causes of Calcutta with respect to sale after distress

(*3*) No municipal officer or servant shall directly or indirectly purchase any property at any such sale.

(*4*) The Corporation shall apply the proceeds of every such sale, or such part thereof as shall be requisite, in discharge of the sum due and of the costs of recovery.

(*5*) The surplus (if any) of such proceeds shall be forthwith credited to the Municipal Fund; but, if the same be claimed by written application to the Corporation within three years from the date of the sale, a refund thereof shall be made to the person who was in possession of the movable property at the time of its seizure.

(*6*) Any such surplus not so claimed shall be the property of the Corporation.

Power to Corporation to issue fresh warrant when sale-proceeds insufficient

**198.** (*1*) If the proceeds of any sale under section 197 are not sufficient to cover the sum due, together with the costs of recovery, the Corporation may issue a fresh warrant of distress in the form in Schedule XI, or in a form to the like effect, for the recovery of the balance due and for all additional costs thereof.

(*2*) The provisions of sections 191 to 197, inclusive, shall, with all necessary modifications, be deemed to apply whenever a warrant is issued under sub-section (*1*).

Recovery of owner's share of rate from occupier, or his sub-tenants, and deduction of amount from rent

**199.** (*1*) If the sum due from the owner of any land or building on account of the consolidated rate remains unpaid after notice of demand has been duly served upon him, the Corporation may cause a notice of demand to be served upon the occupier of such land or building, or upon any of his sub-tenants for the time being thereof.

(*2*) If such occupier or any of such sub-tenants fails within fifteen days from the service of such notice to pay the amount therein demanded, the said amount may be recovered from him by distress and sale under the provisions of this chapter.

(*3*) No arrears of the owner's share of the consolidated rate shall be recovered from any occupier or sub-tenant under this section if it has remained due for more than one year or if it is due on account of

*(Part IV.—Chapter XVI.—Recovery of the consolidated rate and other taxes.—Sections 200—202.)*

any period during which such occupier or sub-tenant was not in occupation of the land or building in respect of which the rate is due.

(4) If any sum is paid by or recovered from any occupier or sub-tenant of any land or building under this section, he shall be entitled to deduct the same from the rent payable by him in respect of such land or building for the period for which the arrear of consolidated rate was due, or for any subsequent period.

Liability of purchaser for vendor's share of consolidated rate

**200.** The purchaser of—

(a) any land or building, or,

(b) any share, divided or undivided, in any land or building,

in respect of which any sum is due at the time of the purchase on account of the owner's share of the consolidated rate, shall be liable for the said sum.

Provided that such purchaser shall not be liable for any sum so due for any period exceeding one year prior to the date of the purchase

Execution of distress warrant outside Calcutta

**201.** (1) When a warrant of distress has been issued against any person under section 191 or section 198—

(a) if no sufficient movable property belonging to the said person can be found in Calcutta, or,

(b) when the said person is the occupier of premises in respect of which the consolidated rate is due, if no sufficient movable property can be found on such premises,

the Corporation may issue a warrant, to any Magistrate in Bengal without Calcutta, for the distress and sale of any movable property belonging to the said person within the jurisdiction of such Magistrate

(2) Any Magistrate to whom a warrant is so issued shall—

(i) endorse the same and cause it to be executed, and

(ii) remit the proceeds of the sale under such warrant to the Corporation.

(3) Such proceeds shall be dealt with under the provisions of section 197.

Distraint not unlawful for want of form

**202.** No distress levied under this Act shall be deemed unlawful, nor shall any person making the same be deemed a trespasser, on account of—

(a) any defect or want of form in the notice, summons, notice of demand, warrant of distress, inventory or other proceeding relating thereto, or

(b) any irregularity committed by the said person:

Provided that any person aggrieved by such defect or irregularity may recover, in any Court of competent jurisdiction, full satisfaction for any special damage sustained by him.

*(Part IV.—Chapter XVI.—Recovery of the consolidated rate and other taxes.—Sections 203—207.)*

Power to Corporation to take summary proceedings against persons about to leave Calcutta

**203.** (*1*) If the Corporation at any time have reason to believe that any person from whom any sum is due on account of the consolidated rate is about forthwith to remove from Calcutta, the Corporation may direct the immediate payment by such person of the sum so due and cause a bill for the same to be presented to him.

(*2*) If, on presentation of such bill, the said person does not forthwith pay the sum due by him, the amount shall be leviable by distress and sale under the provisions of this chapter:

Provided that—

(*a*) it shall not be necessary to serve upon the said person any notice of demand, and

(*b*) the warrant of distress may be issued and executed without any delay.

Power to Corporation to sue for arrears.

**204.** It shall be competent to the Corporation instead of proceeding against a defaulter by distress and sale under the provisions of this chapter, or after a defaulter has been so proceeded against unsuccessfully or with only partial success, to recover from him by suit, in any Court of competent jurisdiction, any sum due, or the balance of any sum due, as the case may be, on account of the consolidated rate, together with all costs.

The consolidated rate to be a first charge on premises.

**205.** The consolidated rate due from any person in respect of any land or building shall, subject to the prior payment of the land-revenue (if any) due to the Government thereupon, be a first charge upon the said land or building and upon the movable property (if any) found within or upon such land or building and belonging to the said person.

*Other taxes.*

Power to Corporation to prosecute or serve notice of demand.

**206.** (*1*) When any sum is due from any person on account of—

(*a*) the tax on carriages and animals,

(*b*) the tax on professions, trades and callings, or

(*c*) the scavenging-tax,

the Corporation may either prosecute such person under section 492 or cause to be served on him a notice of demand in the form in Schedule X or in a form to the like effect.

(*2*) The provisions of section 190, sub-section (*2*), section 192 and clause (*a*) of section 202 shall, with all necessary modifications, be deemed to apply to every such notice of demand.

Election by defaulter to pay or to appear before Magistrate or Corporation.

**207.** Within seven days after the service on any person of a notice of demand under section 206, such person may—

(*a*) pay the sum demanded together with any fee imposed under section 190, sub-section (*2*), or

*(Part IV.—Chapter XVI.—Recovery of the consolidated rate and other taxes.—Sections 208—212.)*

(*b*) send a letter to the Corporation enclosing the sum demanded and electing to be prosecuted under section 492, or

(*c*) appear before the Corporation personally or by agent, and contest the demand.

Procedure by Corporation after election by defaulter under section 207

**208.** (*1*) If any person adopts the procedure provided by clause (*b*) of section 207, he shall be prosecuted as therein mentioned,

and the sum deposited under that clause shall be deducted from the amount of any fine imposed under section 492.

(*2*) If he contests the demand in pursuance of clause (*c*) of section 207, the decision of the Corporation, after hearing anything that may be urged by him or on his behalf, shall be final,

and if the Corporation find that the whole amount of the demand is due, they may, by way of penalty for previous failure to pay such amount, increase the same by any sum not exceeding fifty *per cent.* thereof.

Power to Corporation to increase penalty where defaulter does not appear before Magistrate or Corporation

**209.** If, within seven days after the service on any person of a notice of demand under section 206, the said person has not taken any of the courses permitted by section 207, the Corporation may, by way of penalty for previous failure to pay the amount due, increase the same by any sum not exceeding fifty *per cent.* thereof.

Distraint

**210.** (*1*) If, in any case referred to in section 208, sub-section (*2*), or section 209, the amount of the demand, together with the amount of any penalty imposed thereunder, be not forthwith paid by the person liable to pay the same,

such amount may, with all costs of recovery, be recovered under a warrant in the form in Schedule XI, or in a form to the like effect, by distress and sale of the movable property of such person.

(*2*) The provisions of sections 191 to 198 and sections 201 to 203, inclusive, shall, with all necessary modifications, be deemed to apply whenever a warrant is issued under sub-section (*1*).

Power to Corporation to seize hawkers' goods

**211.** (*1*) Notwithstanding anything contained in section 210, if any person included under class VIII, number 81, or class IX, number 83, in Schedule VI fails to take out a license under section 175, the Corporation may cause the goods, which such person is hawking for sale, to be seized.

(*2*) Any goods so seized shall be dealt with under the provisions of this chapter, as property distrained under section 191.

*Supplemental provisions.*

Taxes not invalid for defect of form.

**212.** (*1*) No assessment and no charge or demand of the consolidated rate or any other tax made under

*(Part IV.—Chapter XVI.—Recovery of the consolidated rate and other taxes.—Section 213.)*

this Act shall be called in question or in any way affected by reason of—

(*a*) any mistake—

(*i*) in the name, residence, place of business or occupation of any person liable to pay the tax, or

(*ii*) in the description of any property or thing liable to the tax, or

(*iii*) in the amount of assessment of tax; or

(*b*) any clerical error; or

(*c*) any other defect of form.

(*2*) It shall suffice in the case of any such tax on property or any assessment of value for the purpose of any such tax, if the property taxed or assessed is so described as to be generally known,

and it shall not be necessary to name the owner or occupier thereof.

Cancellation of irrecoverable dues

**213.** The Corporation may order to be struck off the books any sum due on account of the consolidated rate or any other tax or any other account, which may appear to them to be irrecoverable.

## PART V.

### THE PUBLIC HEALTH, SAFETY AND CONVENIENCE.

### CHAPTER XVII.

### WATER-SUPPLY.

*Proprietary rights of the Corporation.*

Public water-works, etc., vested in the Corporation

**214.** All public tanks, reservoirs, cisterns, wells, aqueducts, conduits, tunnels, pipes, taps and other water-works, whether made, laid or erected at the cost of the Municipal Fund, or otherwise, and all bridges, buildings, engines, works, materials and things, connected therewith or appertaining thereto, and also any adjacent land (not being private property) appertaining to any public tank, shall be vested in the Corporation.

*General duties of the Corporation in respect of the supply of water.*

Corporation to provide supply of filtered and unfiltered water

**215.** (*1*) The Corporation shall provide—

(*a*) a supply of filtered water in all parts of Calcutta, and

(*b*) a supply of unfiltered water—

(*i*) in those parts of Calcutta in which such water is provided at the commencement of this Act, and

(*ii*) in such other parts of Calcutta as they may think fit.

(*2*) Notwithstanding anything contained in sub-section (*1*), the Corporation may discontinue the supply of unfiltered water in any part of Calcutta

Provided that where the supply of unfiltered water is so discontinued—

(*a*) filtered water may be used for non-domestic purposes and for the purposes mentioned in section 221, and

(*b*) a sufficient quantity of filtered water shall, subject to the provisions of section 223, be supplied for all such purposes, in lieu of the unfiltered water discontinued as aforesaid.

Bathing platforms and public stand-posts

**216.** (*1*) The Corporation shall erect sufficient and convenient bathing platforms and public stand-posts for the supply, free of charge, of filtered water for bathing and other domestic purposes.

(*2*) All such bathing platforms and stand-posts shall be supplied with a sufficient quantity of filtered water.

Hydrants, etc., for street-watering, etc

**217.** On all distribution pipes in the unfiltered water system and, if the Corporation so direct, also in the filtered water system, suitable hydrants shall be provided for street-watering, fire-extinguishing, washing down hackney-carriage stands, and flushing street-gullies, together with such sluices, branches and appliances as may be necessary for the efficient flushing of the municipal drains.

*(Part V—Chapter XVII.—Water-supply.—Sections 218—222.)*

Pressure of supply.

**218.** The pressure of the supply of filtered water in the municipal mains in Calcutta shall continuously be not less than forty feet;

and the pressure of the supply of unfiltered water shall likewise be not less than forty feet, except during those hours when the pressure is locally reduced by street-watering, drain-flushing or extinguishing fire:

Provided that the Corporation, by a resolution in favour of which not less than two-thirds of the Councillors and Aldermen present and voting have voted, may authorize a lower pressure in any case where, owing to causes over which the Corporation have no control, or by reason of other circumstances, it is impracticable to secure a pressure of forty feet.

Testing of purity of filtered water

**219.** It shall be the duty of the Corporation to test the purity of the supply of filtered water once every week.

*Use of water.*

Use of filtered water

**220.** (*1*) Subject to the provisions of sections 215, sub-section (*2*), and 230 filtered water shall be supplied for domestic purposes only.

(*2*) No person shall, without the written permission of the Corporation, use for other than domestic purposes filtered water supplied under this chapter for domestic purposes:

Provided that, in case of emergency, filtered water may be used for extinguishing fire.

Use of unfiltered water.

**221.** (*1*) Unfiltered water shall be used for public purposes, such as—

(*a*) street-watering,

(*b*) flushing of municipal drains, public privies and urinals, gully pits and hackney-carriage stands, and

(*c*) extinguishing fire;

and shall also be used for such other purposes as the Corporation may direct.

(*2*) Unfiltered water may also be used, free of charge,—

(*i*) for flushing privies and urinals on private premises connected with the sewers, and

(*ii*) for flushing drains on private premises and for cleansing stables, cattle-sheds and cow-houses occupied by animals which are not kept for profit or hire.

(*3*) Unfiltered water shall not be used for domestic purposes.

Supply of filtered water for purposes other than domestic purposes.

**222.** A supply of filtered water for purposes other than domestic purposes shall be made upon such terms and conditions as to payment and quantity and for such period, as the Corporation may think fit.

*(Part V.—Chapter XVII.—Water-supply.—Sections 223—226.)*

*Private supply of water to premises.*

Right of occupier of connected premises to receive water in consideration of payment of the consolidated rate

**223.** The occupier of any premises connected with the municipal water-supply shall be entitled to have, free of further charge, not more than fifteen hundred gallons of filtered water for every rupee paid to the Corporation as the consolidated rate on account of such premises, together with a sufficient supply of unfiltered water for flushing privies, urinals and drains within the premises and for cleansing stables, cattle-sheds and cow-houses within the premises which are occupied by animals not kept for profit or hire:

Provided that—

(*a*) in no masonry building directly connected with the municipal water-supply shall the free allowance of filtered water be less than twenty-five, or more than fifty gallons per head per day, calculated upon the ordinary number of inmates of the building, as determined by the Corporation; and

(*b*) if, under the provisions of this chapter, the Corporation at any time permanently discontinue the unfiltered water-supply, the Corporation may fix such larger free allowance of filtered water per day, in lieu of the supply of unfiltered water, as they may think fit.

Power to Corporation to allow occupier of premises to lay down service-pipes

**224.** Subject to such conditions as they may from time to time impose, the Corporation may allow any person occupying any premises to lay down service-pipes from the mains of the Corporation for the purpose of bringing into the premises a supply of filtered and unfiltered water for use therein under the provisions of this chapter.

Requisition by occupier of masonry building or owner to provide works for supply of water

**225.** (*1*) Any occupier of a masonry building who holds the same direct from the owner may, by written notice signed by him, require the owner to provide all such necessary works as may be required for bringing into the premises within which such building is situate a sufficient supply of filtered water for domestic purposes and a sufficient supply of unfiltered water for the purposes specified in section 221, sub-section (*2*).

(*2*) Every such notice shall contain an undertaking on the part of the occupier—

(*a*) to pay, during the residue of his term of occupation, interest at the rate of one *per cent. per mensem*, calculated from the date of the completion of the works, on the cost of all works so provided by such owner, and,

(*b*) if the premises do not abut upon some street in which there is a supply-main, to pay the cost of connecting the premises with the nearest supply-main.

Provision or completion of works by occupier in default of owner, and deduction of expenses from rent

**226.** If any owner upon whom a notice has been served under section 225 does not, within one month from such service, cause all necessary works, as required by the said notice, to be provided or completed, the occupier who gave the notice may cause the works to be provided or completed,

*(Part V.—Chapter XVII.—Water-supply.—Sections 227–229.)*

and may deduct from the rent payable by him to such owner the expenses incurred by him in respect of such works, except so much of such expenses as may have been incurred under the circumstances mentioned in clause (*b*) of sub-section (*2*) of section 225.

Arbitration in case of difference between owner and occupier.

**227.** (*1*) If there is any difference between the owner and the occupier of any premises respecting the cost or the sufficiency of the water-supply thereof, either party may refer such difference to the Corporation, and the written award of the Corporation shall be binding on such owner and occupier.

(*2*) There shall be payable to the Corporation, by the person making a reference under sub-section (*1*), a fee at the rate of two rupees for every one hundred rupees of the monthly rent of the said premises :

Provided that such fee shall in no case exceed ten rupees.

Power to Corporation to direct owner to obtain sufficient supply of water from nearest main.

**228.** Whenever it appears to the Corporation that any premises are without a sufficient supply of water, and that such a supply of water can be furnished from a main not more than one hundred feet distant from the nearest part of such premises, the Corporation may, by written notice, require the owner to obtain such supply and for that purpose to lay down such pipes, hydrants, stand-posts and other fittings and execute all such other works as the Corporation may direct :

Provided that—

(*a*) in any case in which the owner satisfies the Corporation that he is too poor to bear the cost of the said works, the Corporation may pay the whole or any part of such cost from the Municipal Fund ; and

(*b*) if any premises in respect of which any notice is issued under this section are occupied by a person other than the owner, the occupier shall be bound, if the Corporation so direct, to make to the owner, in respect of all works executed in pursuance of such notice, the payments prescribed by clause (*a*), or clauses (*a*) and (*b*), as the case may be, of sub-section (*2*) of section 225.

Water supply not to be directly connected to huts.

**229.** Notwithstanding anything contained in this chapter, the municipal water-supply shall not be directly connected to any hut, but a sufficient supply of unfiltered water shall be provided for the flushing of any connected-privy attached to a hut :

Provided that the Corporation may supply a direct filtered water connection to a hut on such conditions as they may impose and subject to such rules as may be made by them in this behalf.

*(Part V.—Chapter XVII.—Water-supply.—Sections 230—233.)*

Power to Corporation to sell water for other than domestic purposes.

**230.** (*1*) The Corporation may, in their discretion and subject to such conditions as they may from time to time impose, supply filtered or unfiltered water for any purpose other than a domestic purpose, on receiving a written application specifying the purpose for which such supply is required and the quantity likely to be consumed :

Provided that where, in the opinion of the Corporation, the supply of unfiltered water might possibly lead to contamination, only filtered water shall be supplied—

(*a*) for use by persons who manufacture articles for consumption by human beings, or

(*b*) for cow-houses where cows are kept for the purpose of supplying milk for sale.

(*2*) For all water supplied under sub-section (*1*), payment shall be made at such rate as may be prescribed by the Corporation.

(*3*) When any application under sub-section (*1*) is received, the Corporation may, subject to such charges or rates as may have been fixed by them, place, or allow to be placed, the necessary service-pipes, taps and works (including water-meters) of such dimensions and character as may be prescribed by them, and may arrange for the supply of water through such pipes, taps, works and meters.

*Supply of water to ships.*

Supply of filtered water to ships

**231.** (*1*) Filtered water from public stand-posts may be used, free of charge, for domestic purposes on ships for the time being lying in the Port of Calcutta.

(*2*) The Corporation shall, on demand, supply every ship leaving the Port of Calcutta with a reasonable supply of filtered water for use on the voyage, at such price, not exceeding five rupees for every thousand gallons, as the Corporation may determine.

*Private connections of premises to the water-supply and maintenance thereof.*

Rules as to private connections to premises.

**232.** All private connections of premises to the municipal mains for the supply of water therein, and all pipes, taps and other fittings used for such supply, shall be made maintained and regulated in accordance with, and subject to, the rules contained in Schedule XIV.

Owner to keep works in repairs

**233.** Except in the case of a special agreement to the contrary, the owner of any premises shall bear the expense of keeping all works connected with the supply of water thereto in substantial repair; and, if he fails to do so, the occupier may, after giving the owner three days' notice in writing, himself have the repairs executed and deduct the expenses thereof from any rent which is due from him to the owner in respect of such premises :

*(Part V.—Chapter XVII.—Water-supply.—Sections 234, 235.)*

Provided that nothing in this section shall affect the liabilities of parties under leases executed or made before the first day of April, 1889.

Power to Corporation to take charge of private connections

**234.** The Corporation may, if they think fit, take charge of all communication-pipes and fittings of any existing private service connected with the municipal water-supply up to and including the stop-cock nearest the supply-main for the said service, and such communication-pipes and fittings shall thereafter vest in, and be maintained at the expense of, the Corporation as part of the municipal water-works.

*Regulation of consumption of water, and provision of meters.*

Power of Corporation to establish block meters for the supply of filtered water

**235.** (*1*) The Corporation may establish for any area in Calcutta such blocks as they may think fit in order to regulate the supply and consumption of filtered water, and shall cause each such block to be provided with a meter through which the whole supply of filtered water for such block shall pass and be recorded.

(*2*) Such meters shall be read at such intervals as may from time to time be fixed by the Corporation, and the quantity indicated by any such meter as supplied shall be presumed to be correct until the contrary is proved.

(*3*) The Corporation shall from time to time determine the supply of filtered water to which any block shall be entitled, having regard to the provisions of section 223 and to the amount of the consolidated rate payable for such block, and making the allowance for water used at street stand-posts and public bathing platforms, and for loss through leakage or otherwise, as they may deem just and fair.

(*4*) If the Corporation are satisfied that in any block the quantity of filtered water consumed is in excess of the quantity to the supply of which such block is entitled, they shall cause a warning notice to be served on the occupiers of all premises in the block. If, after the service of such notice, such excess consumption still continues, the excess quantity shall be charged for from the quarter following that in which the notice was served and shall be recoverable from the occupiers of all such premises in such block as are connected with the filtered water-supply, and the occupier of each such premises shall be liable to pay a share of the cost of such excess calculated on the proportion of the amount of the consolidated rate payable in respect of the said premises to the total amount of the consolidated rate payable by persons who are liable to pay the cost of the excess:

*(Part V.—Chapter XVII.—Water-supply.—Sections 236—238.)*

Provided that any occupier of any such premises who has provided a separate meter attached to the service-pipe thereof, shall not be liable to pay any proportionate share as aforesaid, but shall pay for any excess, which such meter shows to have been supplied to him in accordance with the provisions of section 238:

Provided also that, on a representation from any ten persons within the block who are held liable for the cost of such excess, the Corporation shall forthwith take into consideration the question of affixing a meter under the provisions of section 237 to the service-pipe attached to any premises within the block, the occupier of which premises is alleged or is suspected by such persons to be wasting filtered water.

Prevention of waste of filtered water in premises

**236.** (*1*) Whenever the Corporation have reason to believe that, as the result of defects in pipes, taps or fittings connected with the water-supply, the filtered water-supply to any premises is being wasted, they may, by written notice, require the owner and occupier of the premises, within a period of four days after service of the notice, to repair and make good any defects in the pipes, taps or fittings connected with the water-supply, so as to put a stop to such waste.

(*2*) If, after the expiration of the said period of four days, the Corporation have reason to believe that waste still continues, they may cut off the supply of filtered water to the said premises

Power to Corporation to provide water-meters

**237.** (*1*) The Corporation may, in their discretion, provide a water-meter and attach the same to the service-pipe of any premises connected with the municipal filtered water-supply.

(*2*) The expense of providing and attaching a meter under sub-section (*1*) shall be paid out of the Municipal Fund.

Payment by occupier for filtered water supplied in excess of statutory allowance

**238.** (*1*) When a meter has been attached to any premises, all filtered water which is shown thereby to have been supplied in excess of the free allowance to which the occupier is entitled under section 223 shall be paid for by him at the rate of one rupee for every three thousand gallons.

(*2*) The Corporation may cause the meter to be read at any time during each quarter, but as nearly as practicable at intervals of three months:

Provided that if, during any quarter, the assessment of such premises is altered, the said free allowance shall be calculated on the consolidated rate payable on the assessment as altered.

(*3*) If such premises are ordinarily occupied by two or more persons holding in severalty, the owner shall be liable for water supplied in excess as prescribed

*(Part V.—Chapter XVII.—Water-supply.—Sections 239—241.)*

by sub-section (*1*); but such owner shall be entitled to recover rateably from the several occupiers, according to the rent paid by each, any amount so paid.

(*4*) Every incoming or outgoing occupier of any metered premises shall, at least three clear days before entering into the occupation of or vacating such premises, as the case may be, cause a written notice to be served upon the Corporation, stating the date on which he intends to occupy or vacate the premises and requiring the Executive Officer to cause the meter to be read for the determination of the liability, if any, for any excess consumption of filtered water on the date of such occupation or the date of such vacation of the premises, as the case may be.

(*5*) Upon receipt of such notice the Executive Officer shall cause the meter to be read and furnish such occupier with a statement of such meter reading

(*6*) The outgoing occupier shall ordinarily be liable to pay for any excess supplied up to the date of his vacating the premises;

and the incoming occupier's liability for any excess consumption of filtered water shall ordinarily accrue from the commencement of his occupation

Provided that where no written notice is delivered to the Corporation under sub-section (*4*), the Corporation shall be entitled to realise from such incoming occupier the full proportionate amount of the charges for excess water consumed, on the basis of the next quarterly or other reading of the meter made after the occupation of the incoming occupier, or such less amount as the Corporation may think fit, regard being had to the number of days in any quarter during which the premises were occupied by such incoming occupier, the number of inmates during that period and the amount of free allowance to which such occupier may be entitled under section 223.

Presumption as to correctness of meter

**239.** Whenever water is supplied under this chapter through a meter, it shall be presumed that the quantity indicated by the meter has been consumed until the contrary is proved.

Rules as to meters

**240.** The use, maintenance and testing of meters provided under this chapter, and the calculation of the amount payable under section 238 in case of the incorrectness of any such meter, shall be in accordance with, and subject to, the rules contained in Schedule XIV.

Occupier of premises to be primarily liable for certain offences relating to water-supply

**241.** (*1*) If it be shown that an offence against any provision of this chapter, or against any rule or by-law made under this Act relating to water-supply, has occurred in any premises connected with the municipal water-supply, it shall, subject to the provisions of sub-section (*2*), be presumed, unless

*(Part V.—Chapter XVII.—Water-supply.—Section 242.)*

and until the contrary is proved, that such offence has been committed by the occupier of the said premises.

(2) The existence of artificial means for—

(a) altering the index to any meter provided under this chapter for measuring filtered water, or

(b) preventing any such meter from duly registering the quantity of water supplied, or

(c) abstracting or using water before it has been registered by such meter,

shall, where the meter is under the custody or control of the consumer of such water, be *primâ facie* evidence that the consumer has fraudulently caused such alteration, prevention, abstraction or use.

*Supply of water for use beyond Calcutta.*

Supply of filtered water to adjacent municipalities and cantonments

**242.** (1) The Corporation may at any time, on receiving an application from the municipality or cantonment concerned, direct that such quantity of filtered water *per diem* as may be determined by the Corporation shall be delivered into reservoirs or pipes placed in—

(a) any of the following municipalities or cantonments, namely :—

*Municipalities*

| | |
|---|---|
| Baranagar, | Khardah, |
| Garulia, | South Dum-Dum, |
| Kamarhati, | South Suburban, |
| North Barrackpur, | Titaghar, |
| North Dum-Dum, | Tollygunj; |
| Panihati, | |

*Cantonments:*

Barrackpur, | Dum-Dum : or

(b) any municipality which is hereafter formed by subdividing any municipality mentioned in clause (a), or by uniting into one municipality any of the municipalities mentioned in that clause;

and that for all water so delivered payment shall be made at such rate, not being less than the cost (including loan charges, allowance for depreciation of plant and other charges) to the Corporation, as may from time to time be determined by the Corporation.

(2) An appeal shall lie to the Local Government from any refusal by the Corporation to give a direction under sub-section (1), or from any direction given by the Corporation under that sub-section.

(3) Before deciding any such appeal, the Local Government shall consider any representation made by the Corporation with reference thereto.

(4) No order made on any such appeal shall direct the delivery of water at a lower rate of payment than the cost to the Corporation.

(5) Every order made by the Local Government on any such appeal shall be final.

*(Part V.—Chapter XVII.—Water-supply.—Sections 243—245.)*

Supply of water to persons residing out of Calcutta or for use without Calcutta

**243.** (*1*) The Corporation may, in their discretion, allow any person not residing in Calcutta to take or be supplied with water on such terms as they may from time to time prescribe.

(*2*) No person shall, without the written permission of the Corporation, take or cause to be taken for use without Calcutta water supplied under this chapter:

Provided that this sub-section shall not apply to water taken by travellers for use on a journey.

*Supplemental provisions.*

General powers of the Corporation in regard to water mains

**244.** The Corporation shall have the same powers and be subject to the same restrictions for carrying water-mains in or without Calcutta as they have and are subject to for carrying drains in or without Calcutta.

Power to Corporation to cut off or turn off supply of water to premises

**245.** (*1*) Notwithstanding anything contained in this chapter, the Corporation may cut off the connection between any water-works of the Corporation and any premises to which water is supplied from such works, or may turn off such supply, in any of the following cases, namely:—

(*a*) if the premises are unoccupied;

(*b*) if, after receipt of a written notice from the Corporation requiring him to refrain from so doing, the owner or occupier of the premises continues to use the water or to permit the same to be used, in contravention of this Act or of any rule or by-law made thereunder;

(*c*) if the occupier of the premises contravenes section 220, sub-section (*2*), or section 243, sub-section (*2*);

(*d*) if the occupier refuses to admit any municipal officer or servant duly authorized in that behalf into the premises for the purpose of making any inspection under this chapter or under any rule or by-law relating to water-supply made under this Act, or prevents such municipal officer or servant from making such inspection;

(*e*) if the owner or occupier of the premises wilfully or negligently injures or damages his meter or any pipe or tap conveying water from any works of the Corporation;

(*f*) if any pipes, taps, works or fittings connected with the supply of water to the premises be found, on examination by the Corporation, to be out of repair to such an extent as to cause so serious a waste of water that, in the opinion of the Executive Officer, immediate prevention is necessary;

(*g*) if the use of the premises for human habitation has been prohibited under section 381, from the date from which the premises are to be vacated under the order of the Magistrate;

*(Part V.—Chapter.—XVII.– Water-supply.—Sections 246, 247.)*

(*h*) if there is any water-pipe situated within the premises to which no tap or other efficient means of turning the water off is attached; or

(*i*) if by reason of a leak in the service pipe or fitting, damage is caused to the public street and immediate prevention is necessary:

Provided as follows:—

(*i*) water supplied for flushing privies or urinals shall not be cut off or turned off;

(*ii*) water shall not be cut off or turned off in any case referred to in clause (*g*), unless written notice of not less than forty-eight hours has been given to the occupier of the premises.

(*2*) The expense of cutting off the connection or of turning off the water and of restoring the same, as determined by the Corporation in any case referred to in sub-section (*1*), shall be paid, in the case of a *bustee*, by the owner of the premises, and in any other case by the owner or occupier of the premises:

Provided that no charge for such expense shall be made in the cases mentioned in clause (*a*) and clause (*g*) of the said sub-section.

(*3*) No action taken under or in pursuance of this section shall relieve any person from any penalties or liabilities which he may otherwise have incurred

Filling up wells when water supplied.

**246.** Whenever a supply of filtered and unfiltered water has been provided in any street, the Corporation may, by written notice, require the owner of any well situated in premises which are supplied from the mains to fill it up with suitable materials.

Laying of pipes or construction of aqueducts beyond Calcutta for bringing water into Calcutta

**247.** (*1*) When a plan for laying pipes or constructing aqueducts for bringing water into Calcutta from any place without Calcutta has been approved by the Local Government, the Corporation may, in the execution and for the purposes of the work, exercise, throughout the line of country without Calcutta through which such pipes or aqueducts are to run, all the powers which they might exercise under this Act or under any rule or by-law made thereunder if the said pipes or aqueducts were to run in Calcutta.

(*2*) The Magistrate of any district without Calcutta through which the said pipes or aqueducts are to run may exercise, in respect of such work, the same powers and jurisdiction as a Magistrate may, under this Act, exercise in respect of any work executed by the Corporation in Calcutta.

(*Part V.*)

## CHAPTER XVIII.

### DRAINS, PRIVIES AND OTHER RECEPTACLES FOR FILTH.

*Proprietary rights of the Corporation in respect of drains.*

Public drains, and drains in, alongside or under public streets, to vest in Corporation

**248.** (*1*) All public drains, and all drains in, alongside or under any public street, whether made at the charge of the Municipal Fund or otherwise, and all works, materials and things appertaining thereto shall vest in the Corporation.

(*2*) For the purposes of enlarging, deepening or otherwise repairing or maintaining any such drain so much of the sub-soil appertaining to the drain as may be necessary for the said purposes shall also be deemed to vest in the Corporation.

Drains, etc., constructed, etc., at charge of Municipal Fund on private premises to vest in Corporation

**249.** All drains and ventilation-shafts, pipes and other appliances and fittings connected with drainage-works constructed, erected or set up at the charge of the Municipal Fund in or upon premises not belonging to the Corporation, whether—

(*a*) before or after the commencement of this Act, and

(*b*) for the use of the owner or occupier of such premises or not,

shall, unless the Corporation has otherwise determined, or do at any time otherwise determine, vest and be deemed always to have vested in the Corporation.

*Duties of the Corporation in respect of maintenance and construction of drains.*

Repair and provision of municipal drains by Corporation

**250.** The Corporation shall keep all municipal drains in repair, and shall cause to be made such drains as may be necessary for effectually draining Calcutta.

Provision by Corporation for outfall for discharge of storm-water and sewage

**251.** (*1*) The Corporation shall provide a safe and sufficient outfall, in or without Calcutta, for the proper discharge of the storm-water and sewage of Calcutta in such manner as not to cause any nuisance, whether by flooding any part of Calcutta or of the country surrounding the outfall or in any other way.

(*2*) The plans of such outfall and the method of disposing of sewage shall be subject to the sanction of the Local Government, who may from time to time direct such alterations to be made as they may consider necessary.

(*3*) If the outfall deteriorates, by the decay of existing river channels or otherwise, the Local Government may require such order to be taken, and such additions or alterations to be made to or in the outfall works at, the charge of the Municipal Fund, as they may consider necessary to ensure a safe and sufficient outfall.

*(Part V.—Chapter XVIII.—Drains, privies and other receptacles for filth.—Sections 252, 253)*

*Municipal drains.*

Power to Corporation to improve, discontinue, etc., municipal drains, etc

**252.** (*1*) The Corporation may—

(*a*) enlarge, arch over, or otherwise improve any municipal drain, or

(*b*) discontinue, close up or destroy any municipal drain which has, in their opinion, become useless or unnecessary, or

(*c*) carry any municipal drain—

(*i*) through, across or under any street or any place laid out as, or intended for, a street, and

(*ii*) (after giving reasonable notice in writing to the owner and occupier) into, through or under any land whatsoever or under any building

in Calcutta or, for the purpose of outfall or distribution of sewage, without Calcutta, or

(*d*) construct any new municipal drain in the place of an existing drain in any land wherein any municipal drain has been already lawfully constructed, or

(*e*) repair or alter any municipal drain so constructed:

Provided that—

(*i*) if, in the exercise of any of the powers conferred by this section, it is proposed to demolish any house-drain, a written notice shall be served upon the owner of such drain; and

(*ii*) if, by reason of anything done under this section, any person is deprived of the lawful use of any drain, the Corporation shall, as soon as practicable, provide for his use some other drain as effectual as the one which has been discontinued, closed up or destroyed.

(*2*) In the exercise of any power conferred by this section, the Corporation shall create the least practicable nuisance and do as little damage as may be, and shall pay compensation to any person who sustains damage by the exercise of such power.

Private streets, etc., not to be constructed over municipal drain without permission

**253.** (*1*) Without the written permission of the Corporation—

(*a*) no private street shall be constructed, and

(*b*) no wall or other structure shall be newly erected

over any municipal drain.

(*2*) If any private street be so constructed, or if any wall or other structure be so erected, without such permission, the Corporation may remove or otherwise deal with the same as they may think fit

*(Part V.—Chapter XVIII.—Drains, privies and other receptacles for filth.—Sections 254—257.)*

and the expenses incurred by the Corporation in so doing shall, in the discretion of the Corporation, be paid by the owner of such private street, wall or other structure, or by the person offending.

Communication of drain under control of local authority beyond Calcutta with municipal drain

**254.** *(1)* Any local authority without Calcutta may cause any drain under its control to communicate with any municipal drain, on such terms and conditions as may be agreed on between such local authority and the Corporation.

*(2)* If in any case terms and conditions cannot be agreed upon under sub-section *(1)*, such local authority shall refer the matter to the Local Government, whose decision shall be final.

Communication of municipal drains with drains, lakes, etc., beyond Calcutta

**255.** *(1)* When a plan for making municipal drains to communicate with, or empty themselves into, any public drain, lake, stream, canal or water-course without Calcutta has been approved by the Local Government, the Corporation may, in the execution and for the purposes of the work, exercise, throughout the line of country without Calcutta, through which the said drains are to run, all the powers which they might exercise under this Act if the said drains were to run entirely in Calcutta.

*(2)* The Magistrate of any district without Calcutta, through which the said drains are to run, may exercise, in respect of the said work, the same powers and jurisdiction as a Magistrate may, under this Act, exercise in respect of any work executed by the Corporation entirely in Calcutta.

*Drainage of premises.*

Right of owner or occupier of premises to empty his house-drain into municipal drain

**256.** The owner or occupier of any premises shall be entitled to cause his house-drain to empty into a municipal drain, provided that, before doing so, he—

*(a)* obtains the written permission of the Corporation in accordance with the provisions of Schedule XV, and

*(b)* complies with such conditions as the Corporation may prescribe as to the mode in which, and the superintendence under which, communications between house-drains and municipal drains are to be made.

Connections with municipal drains not to be made except in conformity with section 256.

**257.** *(1)* No person shall, without complying with the provisions of section 256, make, or cause to be made, any connection of a house-drain with a municipal drain.

*(2)* The Corporation may close, demolish, alter or re-make any such connection made in contravention of sub-section *(1)*;

and the expenses incurred in so doing shall, in the discretion of the Corporation, be paid by the owner or occupier of the premises for the benefit of which such connection was made, or by the person offending.

*(Part V.—Chapter XVIII—Drains, privies and other receptacles for filth.—Sections 258—260.)*

Compulsory connection of house-drains with each other

**258.** When a house-drain belonging to one or more persons has been laid in any private street which is common to more than one premises, and the Corporation consider it desirable that any other premises should be drained into such drain,

they may, by written notice, require the owner of such premises to connect his house-drain with such first-mentioned drain;

and the owners of such first-mentioned drain shall thereupon be bound to permit such connection to be made:

Provided that no such connection shall be made—

(*a*) except upon such terms as may be prescribed by the Corporation, and

(*b*) until any payment which may be directed by the Corporation has been duly made

Power to Corporation to drain group or block of premises by a combined operation

**259.** (*1*) If it appears to the Corporation that any group or block of premises may be drained more economically or advantageously in combination than separately,

and a municipal sewer of sufficient size already exists or is about to be constructed, within one hundred feet of any part of such group or block of premises,

the Corporation may cause such group or block of premises to be drained by a combined operation.

(*2*) The expenses incurred in carrying out any work under sub-section (*1*) in respect of any group or block of premises shall be paid by the owners of such premises in such proportions as the Corporation may think fit.

(*3*) Not less than fifteen days before any such work is commenced, the Corporation shall give to each such owner—

(*a*) written notice of the nature of the proposed work, and

(*b*) an estimate of the expenses to be incurred in respect thereof and of the proportion of such expenses payable by him.

Power to Corporation to enforce drainage of undrained premises situate within one hundred feet of a municipal drain.

**260.** When any premises are, in the opinion of the Corporation, without sufficient means of effectual drainage, and a municipal drain or some place approved by them for the discharge of drainage is situated at a distance not exceeding one hundred feet from any part of the said premises, they may, by written notice, require the owner of the said premises—

(*a*) to make a house-drain emptying into such municipal drain or place;

(*b*) to provide and set up all such appliances and fittings as may appear to the Corporation necessary for the purposes of gathering and receiving the drainage from, and conveying the same off, the said premises and of effectually flushing such house-

*(Part V.—Chapter XVIII.—Drains, privies and other receptacles for filth.—Sections 261, 262.)*

(*c*) to remove any existing house-drain, or other appliance or thing used or intended to be used for drainage, which is injurious to health.

Power to Corporation to enforce drainage of undrained premises in other cases

**261.** When in any case not provided for in section 260 any premises are, in the opinion of the Corporation, without sufficient means of effectual drainage, they may, by written notice, require the owner of such premises to make a house-drain communicating with the nearest municipal drain :

Provided as follows—

(*a*) the cost of constructing that portion of the house-drain so made, which is situate more than one hundred feet from the said premises, shall be paid out of the Municipal Fund; and

(*b*) if, in the opinion of the Corporation, there is no municipal drain within a reasonable distance of such premises, they may, by written notice, require the owner of the premises to construct—

(*i*) a closed cesspool of such material, size and description, and in such position, as they may prescribe, and

(*ii*) a house-drain communicating with such closed cesspool.

Power to Corporation to close or limit the use of house-drain in certain cases.

**262.** When a house-drain connecting any premises with a municipal drain is sufficient for the effectual drainage of such premises and is otherwise unobjectionable, but is not, in the opinion of the Corporation, adapted to the general drainage system of Calcutta, they may, by written notice addressed to the owner of the premises, direct—

(*a*) that such house-drain be closed, discontinued or destroyed and that any work necessary for that purpose be done ; or

(*b*) that such house-drain shall, from such date as they prescribe in this behalf, be used for sewage, offensive matter and polluted water only or for rain-water and unpolluted sub-soil water only :

Provided as follows—

(*i*) no house-drain may be closed, discontinued or destroyed by the Corporation under clause (*a*) except on condition of their providing another house-drain equally effectual for the drainage of the premises and communicating with any municipal drain which they think fit ; and

(*ii*) the expenses of the construction of any drain so provided by the Corporation and of any work done under clause (*a*) may be paid out of the Municipal Fund.

*(Part V.—Chapter XVIII.—Drains, privies and other receptacles for filth.—Sections 263—267.)*

Power to Corporation to require that sewage and rain-water drains be distinct in any premises

**263.** (*1*) Whenever it is provided in this chapter that steps shall or may be taken for the effectual drainage of any premises, the Corporation may, by written notice, require the owner to construct—

(*a*) one house-drain for sewage, offensive matter and polluted water, and

(*b*) another and entirely separate house-drain for rain-water or unpolluted sub-soil water, or for both rain-water and unpolluted sub-soil water,

each emptying into separate municipal drains or other suitable places.

(*2*) Any requisition made by the Corporation under sub-section (*1*) may comprise any detail specified in clause (*b*) of section 260.

Power to Corporation to require paving, maintaining and raising level of court-yard, etc.

**264.** For the purpose of efficiently draining any land or building, the Corporation may, by written notice, require the owner of any court-yard, alley, passage or open space—

(*a*) to pave the same with such material and in such manner as may be approved of by the Corporation, and to keep such paving in proper repair, or

(*b*) to raise the level of such court-yard, alley, passage or open space.

Drains for huts.

**265.** (*1*) The Corporation may prescribe such drains for the drainage of huts as the circumstances of the locality and the position of the nearest municipal drain may render practicable.

(*2*) If the Corporation consider that a new drain should be constructed for the benefit of the occupants of any hut, they may, by written notice, require the owner of the land on which such hut stands to construct such drain;

and such owner shall construct such drain, and shall maintain and from time to time cleanse and repair it, to the satisfaction of the Corporation.

(*3*) The powers conferred by this section shall be deemed to be in addition to, and not in derogation of, the powers conferred by section 260 and section 261

Rules as to drains.

**266.** Drains shall be constructed, maintained, repaired, altered and regulated in accordance with—

(*a*) the rules contained in Schedule XV and the by-laws made under this Act relating to drains, and

(*b*) requisitions made under such rules and by-laws.

*Privies, urinals and bathing and washing places.*

Power to Corporation to provide and maintain public privies and urinals.

**267.** The Corporation shall—

(*a*) provide and maintain, in proper and convenient situations, privies and urinals for the use of the public, and

(*b*) cause all privies and urinals so provided to be constructed and kept so as not to be a nuisance or injurious to health.

*(Part V.—Chapter XVIII.—Drains, privies and other receptacles for filth —Sections 268—271.)*

Power to Corporation to license public privies and urinals

**268.** (*1*) The Corporation may—

(*a*) grant licenses, for any period not exceeding one year, for the provision and maintenance of privies and urinals for the use of the public, and

(*b*) at any time, if they think fit, cancel any license so granted after giving one month's notice to the licensee.

(*2*) No person shall—

(*i*) keep a privy or urinal for the use of the public without obtaining a license therefor under sub-section (*1*), or

(*ii*) keep such privy or urinal after such license has been cancelled, or

(*iii*) suffer a licensed public privy or urinal of which he is the licensee to be in a filthy or noxious state.

Privy and urinal accommodation to be provided in new buildings.

**269.** In every new building intended for human habitation, such privy and urinal accommodation as the Corporation may prescribe, shall be provided on such site and in such position as they may direct.

Privy, urinal and other accommodation for premises for twenty or more labourers or workmen

**270.** (*1*) In every new building, at or in which not less than twenty labourers or workmen are or are likely to be employed, such privy and urinal accommodation, and accommodation for bathing or for the washing of clothes and domestic utensils, shall be provided as the Corporation may prescribe. In prescribing any such accommodation the Corporation may determine in each case—

(*a*) whether such building shall be provided with service or connected privies or urinals, or partly with one and partly with the other ; and

(*b*) what the site or position of each privy, urinal or bathing or washing place shall be, and their number.

(*2*) When any premises at or in which not less than twenty labourers or workmen are employed, are without privy, urinal, bathing or washing place accommodation to the satisfaction of the Corporation, they may, by written notice, require the owner of such premises to provide such privy, urinal or bathing or washing place accommodation as they may prescribe.

Provision for privy and urinal accommodation in premises where accommodation is not provided or is insufficient.

**271.** When any premises intended for human habitation are without privy or urinal accommodation, or if the Corporation are of opinion that the existing accommodation therefor available for the persons occupying the premises is insufficient, inefficient or for sanitary reasons objectionable, the Corporation may, by written notice, require the owner of such premises—

(*a*) to provide such or such additional privy or urinal accommodation as they may prescribe ; or

*(Part V.—Chapter XVIII.—Drains, privies and other receptacles for filth—Sections 272-274.).*

(*b*) to make such structural or other alterations in the existing privy or urinal accommodation as they may prescribe; or

(*c*) to substitute connected privy or connected urinal accommodation for any service privy or service urinal accommodation:

Provided that where the privy or urinal accommodation of any premises has been and is being used in common by the persons occupying such premises or any other premises or is in the opinion of the Corporation likely to be so used, the Corporation may, if they are of opinion that such accommodation is sufficient to admit of the same being used by all the persons occupying all the said premises, direct that separate privy or urinal accommodation need not be provided on or for such other premises.

Provided also that the Corporation may, if they are of opinion that there is sufficient public latrine accommodation available for the persons occupying the premises, direct that separate privy or urinal accommodation need not be provided for such premises.

Power to Corporation to require provision of privies and urinals for premises used as a market, etc

**272.** If it appears to the Corporation that any premises are, or are intended to be, used as a market, railway-station, dock, wharf or other place of public resort, or as a place for the employment of persons exceeding twenty in number, in any manufacture, trade or business, or as workmen or labourers, they may, by written notice, require the owner of such premises to provide such service or connected-privies and urinals for the separate use of persons of each sex as they may prescribe

Rules for construction, etc, of privies and urinals

**273.** Privies and urinals, and all appurtenances thereof, shall be constructed, maintained, repaired, altered and regulated in accordance with—

(*a*) the rules contained in Schedule XV and any by-laws made under this Act relating to privies and urinals and the appurtenances thereof, and

(*b*) requisitions made under such rules and by-laws.

Cost of repair of privy payable out of Municipal Fund in certain cases.

**274.** (*1*) If, within three years after any privy has been provided or altered with the sanction or on the requisition of any municipal authority duly empowered in that behalf, or of the Corporation under this Act, a requisition is made by the Corporation for the rebuilding or alteration of such privy, the expenses of such rebuilding or alteration shall be paid out of the Municipal Fund.

(*2*) When any notice has been issued under section 271 or Schedule XV in respect of any privy, urinal or group of privies or urinals and the Corporation are satisfied that the owner of the land or building on or in which any such privy or urinal is situated is from poverty unable to pay the whole or part of the expenses of carrying out the work required by the notice they may direct that such expenses, or such portion thereof, as they think fit, be paid out of the Municipal Fund.

*(Part V.—Chapter XVIII.—Drains, privies and other receptacles for filth.—Sections 275-277.)*

*Inspection of drains, house-gullies, privies, urinals, and bathing and washing places.*

House-drains, etc., not belonging to the Corporation to be subject to inspection and examination

**275.** All house-drains, ventilation-shafts and pipes, cesspools, house-gullies, privies, urinals, and bathing and washing places which do not belong to the Corporation, or which have been constructed, erected or set up at the charge of the Municipal Fund on premises not belonging to them, for the use or benefit of the owner or occupier of the said premises, shall be open to inspection and examination by them.

Power to Corporation to open ground, etc., for purposes of such inspection and examination.

**276.** For the purpose of any inspection and examination under section 275, the Corporation may cause the ground or any portion of any house-drain or other work exterior to a building, or any portion of a building which they may think fit, to be opened, broken up or removed:

Provided that in the prosecution of any such inspection and examination as little damage as possible shall be done.

Expenses of inspection and examination by whom to be paid

**277.** (*1*) If, upon any inspection and examination under section 275, it is found that the house-drain, ventilation-shaft or pipe, cesspool, house-gully, privy, urinal, or bathing or washing place examined is in proper order and condition, and that none of the provisions of this chapter or of Schedule XV, or of any by-law made under this Act have been contravened in respect of the construction or maintenance thereof, and that no encroachment has been made thereupon, the ground or the portion of any building, house-drain or other work (if any) opened, broken up or removed, for the purpose of such inspection and examination shall be filled in, re-instated and made good by the Corporation.

(*2*) But if, upon any such inspection and examination, it is found that any house-drain, ventilation-shaft or pipe, cesspool, house-gully, privy, urinal, or bathing or washing place so examined is not in good order or condition, or has been repaired, changed, altered, encroached upon or (except when the same has been constructed by or under the order of a municipal authority duly empowered in that behalf, or of the Corporation under this Act) constructed in contravention of any of the provisions of this chapter, or of Schedule XV, or of any by-law made under this Act, or of any enactment at the time in force,

the expenses of the inspection and examination shall if the Corporation so direct, be paid by the owner of the premises, and the said owner shall at his own cost fill in, re-instate and make good the ground, or the portion of any building, house-drain or other work opened, broken up or removed for the purpose of such inspection and examination:

Provided that the amount recoverable as the expenses of such inspection and examination shall not in any case exceed ten rupees.

*(Part V.—Chapter XVIII.—Drains, privies and other receptacles for filth.—Sections 278-280.)*

Power to Corporation to require repairs, etc., to be made

**278.** (*1*) When the result of any inspection and examination under this chapter is as described in section 277, sub-section (*2*), the Corporation may, by written notice, require the owner of the premises in which the house-drain, ventilation-shaft or pipe, cesspool, house-gully, privy, urinal, or bathing or washing place referred to in the said sub-section is situate—

(*a*) to close or remove the same or any encroachment thereupon; or

(*b*) to renew, repair, cover, re-cover, trap, ventilate, pave and pitch, flush, cleanse or take such other order with the same as the Corporation may think fit to direct, and to fill in, re-instate and make good the ground or the portion of any building, house-drain or other work opened, broken up or removed for the purpose of the said inspection and examination

(*2*) In any such case the Corporation may, forthwith and without notice, stop up or demolish any house-drain by which sewage, offensive matter or polluted water is carried through, from, into or upon any premises in contravention of any of the provisions of this chapter or of Schedule XV, or of any by-law made under this Act;

and may also, forthwith and without notice, clear, cleanse or open out any house-drain which is choked, blocked or in any way obstructed;

and all expenses incurred by the Corporation in so doing shall, in their discretion, be paid by the owner or the occupier of the premises.

*Position of cesspools and other filth receptacles.*

Position of cesspools.

**279.** (*1*) No person shall construct a cesspool—

(*a*) beneath any part of any building, or within fifty feet of any tank, reservoir, water-course or well; or

(*b*) upon any site or in any position in Calcutta which has not been approved in writing by the Corporation; or

(*c*) upon any site or in any position without Calcutta, which has not been so approved and is situated within three hundred feet of any reservoir used for the storage of filtered water to be supplied to Calcutta.

(*2*) The Corporation may at any time, by written notice, require any person within whose premises any cesspool is constructed in contravention of sub-section (*1*), to remove such cesspool or to fill it up with such material as may be approved by them.

No filth receptacle to be situated within fifty feet of tank, well, water-course or reservoir

**280.** (*1*) No person shall construct any house-drain, service-privy, urinal or other receptacle for sewage or offensive matter, not being a cesspool, within fifty feet of any tank, well or water-course or any reservoir for the storage of water, unless he first satisfies the Corporation that he will take such order therewith as will prevent any risk of sewage or offensive matter passing by percolation or otherwise into such tank, well, water-course or reservoir.

*(Part V.—Chapter XVIII.—Drains, privies and other receptacles for filth.—Sections 281-284.)*

(2) The Corporation may at any time, by written notice, require any person within whose premises there is situated, within fifty feet of any tank, well, water-course or reservoir for the storage of water, any receptacle mentioned or referred to in sub-section (1), to remove such receptacle.

(3) This section shall also apply to any such receptacle, without Calcutta, which is constructed or situated within fifty feet of any reservoir used for the storage of filtered water to be supplied to Calcutta.

*General powers and duties of the Corporation.*

Power to Corporation to affix shafts or pipes for ventilation of drain or cesspool

**281.** For the purpose of ventilating any drain or cesspool, whether vested in the Corporation or not, they may erect upon any premises or affix to the outside of any building, or to any tree, any such shaft or pipe as may appear to them to be necessary.

Power to Corporation to execute work when municipal drains, etc, affected

**282.** When a notice has been issued under this chapter or Schedule XV, requiring any person to construct or alter a drain, the Corporation may themselves cause to be constructed or altered so much of the drain as runs through, over or under any municipal drain, public aqueduct or public street, and the expenses thereby incurred shall be paid by the owner of the drain.

Power to Corporation to provide new drains, etc, in executing works

**283.** (1) In executing any drainage-works under this chapter, the Corporation shall provide and make, out of the Municipal Fund, a sufficient number of convenient ways, water-courses and drains in substitution for any that may be interrupted, injured or rendered useless by reason of the execution of such works:

and, if any difference arises between the Corporation and the persons affected, the same shall be settled by the Court of Small Causes having jurisdiction in the place where such works are executed, on application to be made to it for this purpose.

(2) The decision of the said Court of Small Causes shall, subject to the provisions of section 6 of the Presidency Small Cause Courts Act, 1882, or section 25 of the Provincial Small Cause Courts Act, 1887, as the case may be, be final.

XV of 1882
IX of 1887

General power to Corporation in respect of house-drains, cesspools, privies and urinals.

**284.** Subject to the provisions of this chapter and of Schedule XV,—

(a) all house-drains, as well within as without the premises to which they belong, all cesspools and all privies and urinals shall, as regards their site, construction, materials and dimensions and the arrangements for flushing the same, be under the survey and control of the Corporation, and

(b) the Corporation may, by written notice, require the owner of any premises in which any house-drain, cesspool, privy or urinal is situated, to alter, pave, repair or ventilate the same or to keep it in such a state of repair as to admit of its being sufficiently cleaned, or to supply it with water, or connect it with a sewer, or stop up or demolish it.

*(Part V.—Chapter XVIII.—Drains, privies and other receptacles for filth —Sections 285—287.)*

Power to Corporation to require occupier to carry out work in place of owner

**285.** When, under the provisions of this chapter or of Schedule XV, the Corporation may require the owner of any premises to carry out any work, they may, if they consider it desirable so to do, require the occupier of the said premises to carry out such work, and the occupier shall be bound to comply with the requisition:

Provided that, except in the case of a special agreement to the contrary, such occupier may deduct the amount of the expenses reasonably incurred or paid by him in respect of such work from the rent payable to the owner, or may recover the same from him in any court of competent jurisdiction.

Power to Corporation to execute work after giving person liable notice

**286.** (*1*) When, under the provisions of this chapter or of Schedule XV, any person may be required or is liable to execute any work, the Corporation may, if it appears to them to be expedient and necessary so to do, themselves cause such work to be executed, after giving such person an opportunity of executing the same within forty-eight hours of the receipt of a notice to this effect.

(*2*) The expenses of any work so executed shall be payable by the said person, unless the Corporation direct the payment of such expenses out of the Municipal Fund.

*General prohibitions.*

Prohibition of certain acts

**287.** No person shall,—

(*a*) in contravention of any of the provisions of this chapter or of Schedule XV, or of any notice issued or direction given thereunder, or without the written permission of the Corporation,

in any way alter the fixing, disposition or position of, or construct, erect, set up, renew, rebuild, remove, obstruct, stop up, destroy or change,

any drain, ventilation-shaft or pipe, cesspool, privy, urinal, or bathing or washing place or any trap, covering or other fitting or appliance connected therewith; or,

(*b*) without the written permission of the Corporation, renew, rebuild or unstop any drain, ventilation-shaft or pipe, cesspool, privy, urinal, or bathing or washing place or any fitting or appliance, which has been, or has been ordered to be, discontinued, demolished or stopped up under any of the said provisions; or,

(*c*) without the written permission of the Corporation, make any encroachment upon, or in any way injure or cause or permit to be injured, any drain, cesspool, house-gully, privy, urinal, or bathing or washing place; or

(*d*) drop, pass or place, or cause or permit to be dropped, passed or placed, into or in any drain, any brick, stone, earth or ashes, or any substance or matter, by which or by reason of the amount of which such drain is likely to be obstructed; or

*(Part V.—Chapter XVIII.—Drains, privies and other receptacles for filth.—Section 287.)*

(*e*) pass, or permit or cause to be passed, into any drain provided for a particular purpose any matter or liquid for the conveyance of which such drain was not provided; or

(*f*) cause or suffer to be discharged into any drain from any factory, bakehouse, distillery, workshop or workplace, or from any building or place in which steam, water or mechanical power is employed, any hot water, steam or fumes, or trade effluents or any liquid which would prejudicially affect the drain or the disposal by sale or otherwise of the sewage conveyed along the drain, or which would, from its temperature or otherwise, be likely to create a nuisance.

(*Part V*)

## CHAPTER XIX.

### LICENSED PLUMBERS.

Power to Corporation to license plumbers

**288.** (*1*) The Corporation may from time to time grant to any person they think fit a license to act as a plumber for the purposes of Chapter XVII or Chapter XVIII.

(*2*) Every such license shall be for a renewable period of three years

Rules for guidance of plumbers

**289.** The Corporation may make rules for the guidance of licensed plumbers, and a copy of all such rules, for the time being in force, shall be written on the back of every license granted under section 288.

Powers and duties of plumber licensed for drainage works

**290.** A plumber holding a license for the purposes of Chapter XVIII—

(*a*) may prepare, for the approval of the Corporation, plans and estimates for the drainage of premises;

(*b*) may, with the sanction of the Corporation, carry out drainage works in accordance with this Act and the rules or by-laws made thereunder;

(*c*) shall furnish the Corporation with plans of all drainage works carried out under clause (*b*);

(*d*) may carry out any necessary repairs to municipal drainage works,

(*e*) may, when the owner or occupier of any premises has failed to comply with a notice requiring such owner or occupier to provide for the effectual drainage of such premises and if so directed by an order from the Corporation, carry out such works as may be necessary for the effectual drainage of the said premises; and

(*f*) shall, when any works have been executed under clause (*e*), furnish the Corporation with plans of the same and with a statement of the cost of such works.

Prohibition of work by other than licensed plumber.

**291.** (*1*) No person other than a licensed plumber shall—

(*a*) execute any work in connection with the laying on of water from any mains of the Corporation to any land or building, or in connection with the extension of such mains or the supply of additional fittings after water has been so laid on, or

(*b*) make any underground drain communicating with the public sewers, or

(*c*) do any work in connection with such drain.

*(Part V.—Chapter XIX.—Licensed plumbers.—Sections 292—294.)*

(2) No owner or occupier of any land or building shall cause or allow any work referred to in sub-section (1) to be executed by any person other than a licensed plumber, and such work shall be liable to be dismantled at the discretion of the Corporation without prejudice to the right of the Corporation to prosecute under this Act the owner or occupier, as the case may be.

Power to Corporation to prescribe remuneration of licensed plumbers

**292.** (1) The Corporation may from time to time prescribe the charges to be paid to licensed plumbers for any work done by them under or for any of the purposes of Chapter XVII or Chapter XVIII.

(2) No licensed plumber shall, for any work referred to in sub-section (1), demand or receive more than the charge prescribed therefor under that sub-section.

Control over licensed plumbers and their work and charges

**293.** The Corporation shall provide for—

(a) the exercise of an adequate control over all licensed plumbers;

(b) the inspection of all work carried out by them; and

(c) the hearing and disposal of complaints made by owners or occupiers of premises with regard to the quality of the work done by, the materials used by, any delay in the execution of the work by, or the charges made by, licensed plumbers.

Prohibitions and suspension or cancellation of license

**294.** (1) No licensed plumber shall infringe any of the rules made under section 289, or execute carelessly or negligently any work under this Act or under any rules or by-laws made thereunder, or make use of bad materials, appliances or fittings.

(2) If any licensed plumber contravenes sub-section (1), his license may be suspended or cancelled whether he be prosecuted under this Act or not.

(*Part V.*)

## CHAPTER XX.

### STREETS AND PUBLIC PLACES.

*Proprietary rights of the Corporation.*

Public streets and squares vested in the Corporation and power to the Corporation to name such streets and squares.

**295.** (*1*) All public streets and squares (not being the property and kept under the control of the Government or the Commissioners for the Port of Calcutta or the Board of Trustees for the Improvement of Calcutta), including the soil, sub-soil, and the side-drains, footways, pavements, stones and other materials of such streets and squares, and all erections, materials, implements and other things provided for such streets or squares shall vest in and belong to the Corporation.

(*2*) The Corporation may, from time to time, determine the name by which any public street or square is to be known

*Maintenance, repair, protection and regulation of streets and public places.*

Maintenance and repair of public streets by Corporation.

**296.** The Corporation shall cause the public streets vested in them to be maintained and repaired, and for those purposes may do all things necessary for the public safety or convenience, including the construction and maintenance of bridges, causeways and culverts.

Watering, etc., of public streets, squares and gardens

**297.** The Corporation shall, so far as they may consider it necessary to do so for the public convenience, cause such public streets, squares and gardens, as they may from time to time determine to be watered, oiled or otherwise treated in a suitable manner, and for that purpose may provide such animals, water-carts, materials and other apparatus as they may think necessary.

Rules for maintaining, repairing, etc., streets and public places.

**298.** Streets and public places shall be maintained, repaired, protected and otherwise regulated in accordance with the rules contained in Schedule XVI.

Power to Corporation to remove or alter verandah, etc., or fixtures attached to building which project, etc., over public street or land.

**299.** (*1*) When any verandah, platform or other similar structure or any fixture attached to a building so as to form part of the building, whether erected before or after the commencement of this Act, causes a projection, encroachment or obstruction over or on any public street or any land vested in the Corporation, they may, by written notice, require the owner or occupier of the building to remove or alter such structure or fixture.

(*2*) If the expense of removing or altering any such structure or fixture is paid by the occupier of the building, in any case in which the same was not erected by himself, he shall be entitled to deduct any reasonable expense incurred for the purposes of such removal or alteration from the rent payable by him to the owner of the building.

*(Part V.—Chapter XX.—Streets and public places.—Sections 300—302)*

(3) If the owner or occupier of the building proves that any such structure or fixture was erected before the first day of June, 1863, or that it was erected on or after that day with the consent of any municipal authority duly empowered in that behalf, the Corporation shall, after such structure or fixture has been removed, make reasonable compensation to every person who suffers damage by the removal or alteration thereof.

Power to Corporation to cause wall to be removed or to remove other obstructions in public street

**300.** (1) The Corporation may, after giving notice to him, require any person to remove any wall and may of their own motion remove any fence, rail, post, platform, or other obstruction, projection or encroachment (not being a portion of a building or fixture referred to in section 299) which has been erected or set up, and any materials or goods which have been deposited, in a public street or in or over any drain or aqueduct in a public street, whether the offender be prosecuted under this Act or not;

and the offender shall be liable for the payment of the expense of such removal.

(2) When under sub-section (1), the Corporation cause any wall to be removed or remove any other obstruction, projection or encroachment from land which forms part of a public street, no compensation shall be payable, but the Corporation shall be bound to provide proper means of access to and from the street if none exists already.

*Execution of works in streets.*

Provision of facilities, and payment of compensation, when work executed by Corporation in public street.

**301.** (1) When any work is being executed by the Corporation in any public street, they shall, so far as may reasonably be practicable, make adequate provision for—

(a) the passage or diversion of traffic;

(b) proper access to all premises approached from such street; and

(c) any drainage, water-supply, or means of lighting which are interrupted by reason of the execution of such work.

(2) The Corporation shall pay compensation to any person who sustains special damage by reason of the execution of any such work.

*Building-lines and street alignments for public streets.*

Power to Corporation to prescribe building-line and street alignment

**302.** (1) If the Corporation consider it expedient to prescribe for any public street a building-line or a street alignment, or both a building-line and a street alignment, they shall give public notice of their intention to do so.

Provided that no building-line shall ordinarily be prescribed for any street laid out and made before the commencement of this Act.

*(Part V.—Chapter XX.—Streets and public places.—Section 303.)*

(2) Every such notice shall specify a period within which objections will be received; and a copy of the notice shall be sent by post to every owner of premises abutting on such street who is registered in respect of such premises in the books of the municipality:

Provided that failure or omission to serve such notice on any owner shall not invalidate proceedings under this section.

(3) The Corporation shall consider all objections received within the said period, and shall hear any objector who comes forward within such period as they may fix in this behalf, and may then make an order prescribing a building-line or a street alignment, or both a building-line and a street alignment for such public street.

A register or book with plans attached shall be kept by the Corporation showing all public streets in respect of which a building-line or street alignment has been prescribed, and such register shall contain such particulars as to the Executive Officer may appear to be necessary and shall be open to inspection by any person upon payment of such fee as may from time to time be prescribed by the Corporation.

(4) A building-line shall not be prescribed so as to extend further back than the main front wall of any building (other than a boundary wall) abutting on the street at its widest part.

(5) Every order made under sub-section (3) shall be published in the *Calcutta Gazette*, and shall take effect from the date of such publication.

Restrictions on erection of, or addition to, buildings or boundary walls within street alignment or building-line

**303.** (1) No portion of any building or boundary wall shall be erected or added to within a street alignment prescribed under section 302:

Provided that the Corporation may, in their discretion, permit additions to a building to be made within a street alignment, if such additions merely add to the height of, and rest upon, an existing building or wall, upon the owner of the building executing, if required to do so by the Corporation, an agreement binding himself and his successors in interest—

(a) not to claim compensation in the event of the Corporation at any time thereafter calling upon him or such successors, by written notice, to remove any addition made to any building in pursuance of such permission, or any portion thereof, and

(b) to pay the expenses of such removal.

(2) If the Corporation refuse to grant the permission applied for to add to any building on the ground that the proposed site falls wholly or in part within a street alignment prescribed under section 302, and if such site, or the portion thereof which falls within such alignment, be not acquired by the

*(Part V.—Chapter XX.—Streets and public places.—Sections 304, 305.)*

Corporation within six months after the date of such refusal, they shall pay reasonable compensation to the owner of the site.

(*3*) No person shall erect or add to any building between a street alignment and the building-line without first obtaining the permission of the Corporation to do so:

Provided that it shall not be necessary to obtain permission under this sub-section to erect, between a street alignment and the building-line,—

(*a*) a porch or balcony, or,

(*b*) along not more than one-third of the frontage, an outhouse not exceeding fifteen feet in height.

(*4*) If the Corporation grant permission under sub-section (*3*), they may require the applicant to execute an agreement in accordance with the proviso to sub-section (*1*).

Power to Corporation to take possession of, and add to street, land situated within prescribed street alignment or covered by projecting buildings

**304.** (*1*) The Corporation may at any time, after giving notice to the owner of the land of their intention, take possession of—

(*a*) any land (abutting on a public street) upon which any portion of any building or wall, projecting beyond the front of the adjoining building or wall, on either side of such first-mentioned building or wall, has collapsed or been demolished or burnt down, and

(*b*) any land not covered by buildings (including land on which a building has collapsed or been demolished or burnt down) which is situated within a street alignment prescribed under section 302,

after making full compensation to the owner thereof for any direct damage which he may sustain thereby and shall take possession of any land as specified, in clause (*b*) if the owner thereof calls upon them to do so.

(*2*) Any land taken possession of under sub-section (*1*) shall forthwith be added to and become part of the said street, and shall vest in the Corporation.

*Explanation*.—The expression "direct damage," as used in sub-section (*1*) with reference to land, means the market-value of the land taken and the depreciation, if any, in the ordinary market-value of the rest of the land resulting from the area being reduced in size; but does not include damage due to any particular use to which the owner may allege that he intended to put the land although such use may be injuriously affected by the reduction of the site.

Power to Corporation to set buildings forward to improve line of public street.

**305.** The Corporation may, upon such terms as they think fit, allow any building or wall to be set forward for the purpose of improving the line of a public street.

*(Part V.—Chapter XX.—Streets and public places.—Sections 306—309.)*

*Opening, improvement and closing of public streets, squares and gardens*

Power to Corporation to make, improve and close streets, squares and gardens.

**306.** The Corporation may—

(*a*) lay out and make new streets, squares and gardens;

(*b*) construct new bridges, causeways, culverts and sub-ways;

(*c*) turn, divert, or temporarily or permanently close any public street or part thereof, or permanently close any public square or garden; and

(*d*) widen, open, enlarge, or otherwise improve any public street, square or garden.

Power to Corporation to dispose of a permanently closed street, square or

**307.** (*1*) When any public street or part thereof, or any public square or garden is permanently closed under section 306, the Corporation may sell or lease the site of so much of the road-way and foot-path as is no longer required, or the site of the square or garden, as the case may be, making due compensation to, or providing means of access for, any person who may suffer damage by such closing.

(*2*) In determining such compensation under section 523, the court shall make allowance for any benefit accruing to the same premises or any adjacent premises belonging to the same owner from the construction or improvement of any other public street, square or garden, at or about the same time that the public street, square or garden, on account of which the compensation is paid, is closed

*Projected public streets.*

Projected public streets

**308.** (*1*) The Corporation may from time to time prepare schemes and plans of projected public streets, showing the direction of such streets, the street alignment and building-line on each side of them, their intended width, and such other details as may appear desirable.

(*2*) The width of such projected streets, inclusive of space for foot-paths, shall not be less than forty feet or, in a *bustee*, twenty feet:

Provided that—

(*a*) the Corporation may, for special reasons, reduce the width of any projected street, but not so as to be less than thirty feet or in a *bustee* sixteen feet; and

(*b*) this sub-section shall not apply in any case in which the projected street, or any part thereof, runs along an existing street and the Corporation consider it impracticable to widen the street to the extent of forty feet or twenty feet, as the case may be.

Provisions of sections 302 and 303 to apply to projected public streets.

**309.** The provisions of sections 302 and 303 shall, with all necessary modifications, apply to public streets projected under section 308.

*(Part V.—Chapter XX.—Streets and public places.—Sections 310, 311.)*

*Acquisition of land and buildings.*

Power to Corporation to acquire land and buildings for improvement of public streets, squares and gardens

**310.** (*1*) The Corporation may acquire—

(*a*) any land required for the purpose of opening, widening, extending or otherwise improving any public street, square or garden, or of making any new public street, square or garden, and

(*b*) the buildings (if any) standing upon such land.

(*2*) The Corporation, with the sanction of the Local Government, and after giving due notice of their intention and an opportunity to any objector, who appears within such period as they may fix, to be heard in this connection, may acquire, in addition to any land and buildings acquired under sub-section (*1*), any land outside any proposed street alignment, with the buildings (if any) standing thereupon, which the Corporation may, for any of the purposes mentioned in sub-section (*1*), including the recoupment of the cost or any portion of the cost incurred for any such purposes, consider it expedient to acquire.

*Abandonment of acquisition.*

Abandonment of acquisition in consideration of special payment

**311.** (*1*) In any case in which the Local Government have sanctioned the acquisition of land under section 310, sub-section (*2*), the owner of the land, or any person having an interest therein greater than a lease for years having seven years to run, may make an application to the Corporation, requesting that the acquisition of the land be abandoned in consideration of the payment by such person of a fee to be fixed by the Corporation in that behalf.

(*2*) The Corporation shall admit every such application if it reaches them before the time fixed by the Collector under section 9 of the Land Acquisition Act, 1894, for making claims in reference to the land: I of 1894

Provided that unless the application is made by all the persons who have an interest in the land greater than a lease for years having seven years to run, the application shall not be deemed to be admitted unless the person applying undertakes to pay in one instalment the full fee payable under sub-section (*3*) and thereafter pays such fee.

*Explanation.*—A mortgagee shall not be deemed to be a person having an interest in the land greater than a lease for years having seven years to run.

(*3*) If the Corporation decide to admit any such application, they shall forthwith inform the Collector, and the Collector shall thereupon stay proceedings for the acquisition of the land, for such period as the Corporation may request, and the Corporation shall proceed to fix a fee in consideration of which the acquisition of the land may be abandoned.

*(Part V.—Chapter XX.—Streets and public places.—Section 311.)*

(*4*) In fixing the fee to be paid in consideration of the abandonment of the acquisition of the land, the Corporation shall, so far as to them may appear to be practicable, fix a sum which in their opinion represents two-thirds of the increment in the value of the land, which will in their opinion accrue to that land as a result of the improvements effected in the locality by the scheme for the purposes of which the acquisition has been sanctioned.

(*5*) Such fee shall be and remain a charge on the land, in respect of which it has been fixed, until the repayment thereof with interest in the manner hereinafter provided and shall be payable by the applicant on or before a date to be fixed by the Corporation in this behalf; and such date shall not be less than four years from the publication of the notification under section 6 of the Land Acquisition Act, 1894, nor shall such date be a date before that on which the scheme is declared by the Corporation to be completed in so far as it affects such land. I of 1894

(*6*) Before the date so fixed, the person from whom the Corporation have arranged to accept the said fee, may, if the Corporation are satisfied that the security offered by him is sufficient, execute an agreement with the Corporation either—

(*i*) to leave the said fee outstanding as a charge on his interest in the land, subject to the payment in perpetuity of interest at a rate not exceeding seven *per cent. per annum*, the said interest to run from the date fixed under sub-section (*5*), or

(*ii*) to pay the said fee by such number of equal yearly or half-yearly instalments of principal or of principal and interest, as may be approved by the Corporation, interest in both cases being calculated at a rate not exceeding seven *per cent. per annum* on the amount outstanding.

(*7*) When the said fee has been paid on or before the date fixed under sub-section (*5*), or when an agreement has been executed in pursuance of sub-section (*6*) in respect of any land, the proceedings for the acquisition of the land shall be deemed to be abandoned.

(*8*) If the said fee be not paid on or before the date fixed under sub-section (*5*), the Collector shall then proceed to acquire the land.

(*9*) If any sum payable under an agreement executed in pursuance of sub-section (*6*) be not paid on the date on which it is due, or on such later date as the Corporation may in their discretion fix in this behalf, so much of the fee fixed by the Corporation under sub-section (*3*) as is still unpaid, shall be payable on that date, in addition to the said sum.

*(Part V.—Chapter XX.—Streets and public places.—Sections 312—314.)*

(*10*) At any time after an agreement has been executed in pursuance of clause (*i*) of sub-section (*6*) any person may pay off the balance outstanding of the charge created thereby, with interest due, if any, at a rate not exceeding seven *per cent. per annum*, up to the date of such payment.

Recovery of money payable in pursuance of section 311

**312.** When an agreement has been executed by any person in pursuance of section 311, sub-section (*6*), in respect of any land, and any money payable in pursuance of that section is not duly paid, the same shall be recoverable by the Corporation (together with interest up to the date of realization, at a rate not exceeding seven *per cent. per annum*), under the provisions of this Act;

and, if not so recovered, the Corporation may, after giving public notice of their intention to do so, and not less than one month after the publication of such notice, sell the interest of the said person or successor in such land by public auction, and may deduct the said money and the expenses of the sale from the proceeds of the sale, and shall pay the balance (if any) to the defaulter.

Agreement or payment under section 311 not to bar acquisition under a fresh declaration.

**313.** If any land in respect of which an agreement has been executed, or a payment has been accepted, in pursuance of section 311, sub-section (*6*), be subsequently required for any of the purposes of this Act, the agreement or payment shall not be deemed to prevent the acquisition of the land in pursuance of a fresh declaration published under section 6 of the Land Acquisition Act, 1894. I of 1894.

*Special provisions as to private streets.*

Making of new private streets

**314.** (*1*) Any person intending to make or lay out a new private street shall send to the Corporation a written notice, with plans and sections showing the following particulars of the proposed street, namely :—

(*a*) the level, width and alignment thereof, and

(*b*) the arrangements to be made for levelling, paving, metalling, flagging, channelling, sewering, draining and lighting the street.

(*2*) The provisions of this Act as to the width of public streets and the height of buildings abutting thereon, and as to projected public streets, shall respectively apply in the case of streets referred to in sub-section (*1*); and all the particulars referred to in that sub-section shall be subject to approval by the Corporation:

Provided that the Corporation may allow a private street to be made or laid out of a width less than forty feet but not less than twenty feet, and, if the street is less than two hundred feet in length, the maximum width of such street may ordinarily be taken to be thirty feet instead of forty feet.

*(Part V.—Chapter XX.—Streets and public places.—Sections 315, 316.)*

(3) Within ninety days after the receipt of any notice under sub-section (1), the Corporation shall either sanction the making of the street, or disallow it, or ask for further information with respect to such street.

(4) Such sanction may be refused—

(i) if the proposed street would conflict with any arrangements which have been made, or which are in the opinion of the Corporation likely to be made within a reasonable period, for carrying out any general scheme of street improvement, or

(ii) if the proposed street does not conform to the provisions of this Act referred to in sub-section (2), or

(iii) if the proposed street is not designed so as to connect at one end with a street which is already open.

(5) If further information is asked for under sub-section (3), no steps shall be taken to make or lay out the street until orders have been passed upon receipt of such information, and such orders shall be passed within ninety days of the receipt of such further information.

(6) If within ninety days after the receipt of any notice under sub-section (1), or within ninety days after the receipt of any further information asked for under sub-section (3), the Corporation has not refused sanction to the making of the private street, it shall be deemed that sanction to the same has been granted.

Prohibition of breach of section 314

**315.** Except as provided in sub-section (6) of section 314, no person shall make or lay out any street referred to in sub-section (1) of that section,—

(a) until he has obtained the sanction of the Corporation under that section, or

(b) in contravention of any orders made thereunder.

Alteration or demolition of street made in breach of section 314.

**316.** (1) If any person makes or lays out any street referred to in section 314, sub-section (1), without having obtained the sanction of the Corporation under that section, or in contravention of any orders made thereunder, they may, whether or not the offender be prosecuted under this Act, by written notice,—

(a) require the offender to show sufficient cause, by a written statement signed by him and sent to the Corporation on or before such day as may be specified in the notice, why such street should not be altered to their satisfaction or, if such alteration be impracticable, why such street should not be demolished, or

(b) require the offender to appear before them, either personally or by a duly authorized agent, on such day and at such time and place as may be specified in the notice, and show cause as aforesaid.

(2) If any person on whom such notice is served fails to show sufficient cause, to the satisfaction of the Corporation, why such street should not be so altered or demolished, they may cause the street to be so altered or demolished, and the expenses thereof shall be paid by such person.

*(Part V.—Chapter XX.—Streets and public places.—Sections 317, 318.)*

Levelling, etc., of private streets.

**317.** (*1*) If any private street or any part thereof be not levelled, paved, metalled, flagged, channelled, sewered, drained and lighted to the satisfaction of the Corporation, they may, by written notice to the owner of such private street or the respective owners of the land fronting, adjoining or abutting upon such street or part, as the case may be, from time to time require them to level, pave, metal, flag, channel, sewer, drain and light such street or part.

(*2*) If such notice be not complied with and the Corporation, under section 510, sub-section (*2*), execute the works mentioned or referred to therein, the expenses thereby incurred shall be paid by the owner of such private street or the owners in default, in such proportion as may be settled—

(*a*) by the Corporation, or,

(*b*) in case of dispute, by the Court under section 523.

Power to Corporation to take over private streets.

**318.** If any private street which conforms to the provisions of this Act referred to in section 314, sub-section (*2*), be levelled, paved, metalled, flagged, channelled, sewered, drained and lighted to the satisfaction of the Corporation, and if a majority of—

(*a*) the owners of land or buildings in such street, or

(*b*) the owners of the street, or

(*c*) the owners who have paid the expenses referred to in section 317, sub-section (*2*),

signify in writing their consent thereto, the Corporation shall declare the same, by written notice put up in any part of such street, to be a public street, and thereupon the same shall become a public street and shall vest in the Corporation:

Provided that, where a private street has been in existence for not less than thirty years and is used by the people of the locality as a thoroughfare, the Corporation may declare such street to be a public street even though it does not strictly comply with the provisions of this chapter, if—

(*a*) the owners of lands and buildings in such street, or

(*b*) the owners of the street,

signify in writing their consent thereto.

(*Part V.*)

## CHAPTER XXI.

### BUILDINGS.

Use of building-sites, and erection of new buildings

**319.** No piece of land shall be used as a site for the erection of a new building, and no new building shall be erected, otherwise than in accordance with—

(*a*) the provisions of this chapter and of Schedule XVII, and

(*b*) any orders, rules or by-laws made under this Act,

relating to the use of building-sites or the erection of new buildings, as the case may be.

Corporation to determine site of proposed masonry building

**320.** If any question arises as to what, for the purposes of this Act, shall be deemed to be the site of any proposed masonry building, the Corporation shall determine the same, and their decision shall be final

*Licensed building surveyors.*

Licensing of building surveyors

**321.** (*1*) The Corporation may from time to time grant to any person they think fit a license to act as a licensed building surveyor for the purposes of this chapter.

(*2*) The Corporation may prescribe the qualifications to be required in persons to whom licenses may be granted under sub-section (*1*) in respect of the several classes of buildings.

(*3*) Every such license shall be for a renewable period of three years.

Rules for guidance of licensed building surveyors

**322.** (*1*) The Corporation may make rules for the guidance of licensed building surveyors, and a copy of all such rules, for the time being in force, shall be written on the back of every license granted under section 321.

(*2*) The Corporation may from time to time prescribe a scale of fees of licensed building surveyors in respect of any class of buildings, to be made applicable in the absence of a written contract to the contrary.

Power to Corporation to decline plans, etc, made by persons other than licensed building surveyors

**323.** The Corporation may decline to accept any plan, elevation or section, submitted with any application for permission to erect a new building, unless such plan, elevation or section has been prepared by, and bears the signature of, a licensed building surveyor.

*Buildings generally.*

Power to Corporation to regulate future erection of certain classes of buildings in particular streets or localities.

**324.** (*1*) The Corporation may at any time give public notice of their intention to declare that, in any street, portion of a street or locality specified in the notice,—

(*a*) the elevation and construction of the frontage of all new buildings (other than huts) thereafter erected shall, in respect of their architectural features, be such as the Corporation may consider suitable to the locality, or

*(Part V.—Chapter XXI.—Buildings.—Section 325.)*

(*b*) the erection of only detached buildings will be allowed, subject to the provisions of this Act relating to detached buildings, or

(*c*) the erection of shops, or of any particular class of shops, or of buildings of the warehouse class, will not be allowed without the special permission of the Corporation, or

(*d*) the erection of buildings of the warehouse class will be allowed, subject to the provisions of this Act relating to such buildings, or

(*e*) the erection of huts will not be allowed without the special permission of the Corporation.

(*2*) A copy of such notice shall be served by the Corporation on all owners of buildings and lands in such street or portion thereof or in such locality, as the case may be, who are registered on the books of the Corporation as such:

Provided that no failure to serve such notice shall invalidate or affect any declaration published under sub-section (*5*).

(*3*) No objections to any such declaration shall be received after a period of three months from the publication or the service of such notice.

(*4*) The Corporation shall consider all objections received within the said period, and shall hear any objectors who may appear before them within such period as they may fix in this behalf, and may prepare a declaration relating to the streets or localities referred to in the notice.

(*5*) When any such declaration has been so prepared, it shall be published in the *Calcutta Gazette*, and shall take effect from the date of such publication.

(*6*) No person shall erect any new building in contravention of any such declaration.

Masonry building not to be erected without special permission in certain cases.

**325.** (*1*) Save with the special permission of the Corporation, no new building (other than a hut) shall be erected unless—

(*a*) the site of such building abuts on a public street, or a projected public street, or a private street duly sanctioned and constructed under section 314, or existing before the commencement of this Act, or

*(Part V.—Chapter XXI.—Buildings.—Sections 326—328.)*

(*b*) there is access to the building from any such street by a passage or pathway, appertaining to such site, and not less than twelve feet wide at any part.

(*2*) No building shall be erected so as to deprive any masonry building of the means of access as provided in this section.

Power to Corporation to require alteration of existing public building

**326.** For the purpose of bringing any public building, except a building which is intended solely for and is used solely as a place of public worship, into conformity with the provisions of this Act relating to new public buildings, the Corporation may, by written notice, and after giving him an opportunity of being heard, require the owner of the building to make such alterations therein for the purposes of sanitation and the safety of the public or of the inmates thereof, as may be specified in the notice

External doors of public buildings

**327.** The Corporation may, by written notice, require the owner of any public building to provide the building with external doors or doorways of such number, height and width as the Corporation may consider necessary, or to cause the external doors thereof to be so constructed or altered as to open outwards.

Prohibition of change in user of a building

**328.** (*1*) Save with the special permission of the Corporation, no person shall use a building or a substantial part of a building erected for use as, and belonging to, any one class of buildings, as a building of any other class in such a manner that the building or part thereof so used will not be in conformity with the provisions of this Act, or of any rules or by-laws made thereunder, relating to buildings of that other class :

Provided that no change made by this Act in the classification of buildings as in force under the Calcutta Municipal Act, 1899, shall have the effect of preventing the use of a building for the purposes for which it was declared to be intended to be used at the time when the plans of such building were sanctioned. Ben Act III of 1899

(*2*) The provisions of sub-section (*1*) shall not apply to the use as a shop of a building or a substantial part of a building which was not erected for such use :

Provided that if, in any street, portion of a street or locality in which the erection of shops is not allowed under clause (*c*) of sub-section (*1*) of section 324, any such building or part thereof is used as a shop without the special permission of the Corporation, they may, by written notice, require the owner or occupier of such shop to close the same.

*(Part V.—Chapter XXI.—Buildings.—Sections 329—332.)*

In case of dispute Corporation to decide what is to be deemed a substantial part of a building

**329.** If any dispute arises as to what portion of a building shall be deemed to be a substantial part thereof for the purposes of this Act, it shall be referred to the Corporation, whose decision shall be final.

*Application of Act to alterations of, and additions to, buildings*

Application of Act to alterations of, and additions to, buildings

**330.** Subject to the provisions of section 331, the provisions of—

(*a*) this chapter,

(*b*) Schedule XVII, and

(*c*) any orders, rules and by-laws made under this Act,

relating to the erection of new buildings, shall subject to the rules in Part X of the said Schedule XVII, apply to every alteration of, or addition to, any building, and to any other work (except that of necessary repairs not involving any of the works specified in rule 92 of the said schedule) made or done for any purpose in, to, or upon any building.

*Explanation*.—No work of re-erection or re-construction which would constitute any building a new building under sub-clauses (*b*), (*c*) or (*d*) of clause (*46*) of section 3 shall, for the purposes of this section, be deemed to be an alteration of, or addition to, or any other work made or done to or upon, such building, but in the case of such re-erection or re-construction the provisions relating to the erection of new buildings as referred to in this section shall apply to the whole of the said new building.

Power to relax provisions of chapter and Schedule XVII

**331.** In the case of an erection of any new building as defined in sub-clauses (*b*), (*c*) or (*d*) of clause (*46*) of section 3, and in the case of any addition or alteration or other work referred to in section 330, such relaxation of the provisions of this chapter and Schedule XVII may be made as the Corporation may think fit:

Provided that—

(*1*) no such relaxation shall apply to cases other than those specifically mentioned in rule 94 of Schedule XVII, and

(*2*) such relaxations are not likely prejudicially to affect the sanitation or ventilation of the building or other buildings in its vicinity.

Erection of, or addition to, boundary wall affecting an easement

**332.** The Corporation shall not refuse sanction to the erection of a boundary wall exceeding ten feet in height or to any addition to any boundary wall so as to make it exceed ten feet in height on the ground that such boundary wall or such addition would cause interference with an existing easement in favour of, or prevent the acquisition of an easement by, the owner of adjacent premises.

*(Part V.—Chapter XXI.—Buildings.—Sections 333, 334.)*

*Exemptions.*

Exemptions

**333.** The following buildings shall be exempted from the operation of this chapter namely,—

(*a*) any building erected and used, or intended to be erected and used, exclusively for the purpose of accommodating a pump for pumping water to the higher storeys of a building, or exclusively for the purpose of a plant-house, summer-house (not being a dwelling-house), poultry-house or aviary, if the building be wholly detached from, and situated at a distance of at least ten feet from, the nearest adjacent building;

(*b*) any building erected or intended to be erected by, or with the sanction of, the Corporation, for use solely as a temporary hospital for the reception and treatment of persons suffering from any dangerous disease; and

(*c*) any hoarding or like means of protection (other than a masonry wall) which the owner of any premises certifies to the Executive Officer not less than seven days after its erection to have been erected for the purpose of preventing the threatened acquisition of any easement over his own premises or any portion thereof, provided that the stability of such hoarding or other means of protection is certified by the Executive Officer.

Erection and use of temporary building to be approved by Corporation

**334.** (*1*) No building shall be erected or used for a temporary purpose without the approval of the Corporation, or otherwise than in accordance with any by-laws made in this behalf under this Act

(*2*) If any building erected and used for a temporary purpose is not used strictly for such purpose and in accordance with any by-laws made under this Act, the building may be demolished by the Corporation at the expense of the owner thereof, whether he is prosecuted under this Act or not.

(*Part V.*)

## CHAPTER XXII.

### *BUSTEES*

### *Preliminary.*

Power to Corporation to define and alter limits of *bustees*

**335.** The Corporation may define the external limits of any *bustee*, and may from time to time alter such limits.

Restriction on application of this chapter to certain *bustees* or to masonry buildings in *bustees*

**336.** None of the powers conferred by any of the following sections of this chapter shall be exercisable in respect of—

(*a*) any *bustee* the total area of which, as comprised within the limits defined under section 335, is less than two *bighas*, or

(*b*) any masonry building existing in a *bustee* at the time when a standard plan is approved or alignments are prescribed under section 360 for such *bustee*, as the case may be.

### *Improvement of bustees.*

Power to Corporation to require owner of *bustee* of area between ten *cottahs* and two *bighas* to carry out certain improvements

**337.** (*1*) Notwithstanding anything contained in section 336, the Corporation may, for sanitary reasons, require the owner of any *bustee* of which the total area as comprised within the limits defined under section 335 is more than ten *cottahs* but less than two *bighas*,—

(*a*) to open up and construct such passages, not exceeding twelve feet in width, between the huts, and to provide such surface drains and latrines for the use of the tenants of the *bustee*, as the Corporation may think necessary, and

(*b*) to remove the whole or any portion of a hut, provided that the owner of the hut shall be entitled to receive from the Municipal Fund such compensation calculated according to the estimated value of the structure removed, as the Corporation may determine.

(*2*) When the Corporation propose to issue a requisition in respect of any *bustee* under sub-section (*1*), they shall prepare a standard plan showing the proposed improvements, and may then, by written notice, call on the owner of the *bustee* to show cause why the *bustee* should not be improved within a date to be fixed in conformity with the said plan.

(*3*) The provisions of sections 345, 346, 347, 352, 355, 356 and 359 shall, with all necessary modifications, be deemed to apply in the case of every requisition issued under sub-section (*1*).

Power to Corporation to require preparation of standard plan by owner of *bustees*.

**338.** (*1*) The Corporation may at any time, if it appears to them that any *bustee*, for sanitary reasons, requires improvement, serve a written notice upon the owner of such *bustee* requiring him

*(Part V.—Chapter XXII.—Bustees.—Section 339.)*

to prepare and submit a plan of the *bustee*, to the scale of twenty-five feet to the inch, showing—

(*a*) the manner in which the *bustee* should be laid out, with the huts standing in regular lines and with a free passage, in front of and behind each line, of such width as may be necessary for proper ventilation and for scavenging,

(*b*) the drains for the general use of the tenants of the *bustee*,

(*c*) the means of lighting, common water-supply, bathing arrangements (if any) and common privy accommodation to be provided for the use of the tenants.

(*d*) the streets and passages which are to be maintained for the benefit of the tenants,

(*e*) the tanks, wells and low lands which are to be filled up and the tanks which are to be conserved, and

(*f*) any other proposed improvements:

Provided that when there are two or more owners of a *bustee* the Corporation may require them to prepare and submit a joint plan of the *bustee*.

(*2*) The streets referred to in clause (*d*) of sub-section (*1*) shall be not less than sixteen feet wide and ordinarily not more than two hundred feet apart, and the passages referred to in that clause shall be not less than twelve feet wide.

(*3*) If there is any masonry building within the limits of the *bustee*, the said plan shall be so prepared as clearly to distinguish such building and the land pertaining to it.

(*4*) The said plan—

(*i*) shall be considered by the Corporation and modified in such manner as may be required, and

(*ii*) shall, when approved by them, be deemed to be the standard plan of the *bustee*.

Preparation of standard plan by Corporation where owners disagree, etc.

**339.** (*1*) If, after the service of a notice under section 338 on the owners of any *bustee*, such owners—

(*a*) do not agree among themselves in the preparation of a plan as required by such notice, or

(*b*) for any reason prefer to have a plan prepared for them by the Corporation, or

(*c*) fail to comply within sixty days with such notice,

the Corporation shall cause the *bustee* to be inspected by two persons appointed in that behalf, one of whom shall be a medical officer of the Corporation or a person holding the diploma of Public Health or such other qualification as may be prescribed by the Corporation in this behalf, and the other an

engineer, and the Corporation on receipt of their report shall cause a plan to be prepared to the scale and showing the particulars prescribed in the said section.

(*2*) When a plan has been prepared under sub-section (*1*), the Corporation shall fix a day for the hearing of objections (if any) made by or on behalf of the owners of the *bustee* and the owners of huts or masonry buildings therein,

and, after hearing such objections, may, in their discretion, approve such plan either with or without modifications.

(*3*) Every plan of a *bustee* approved under sub-section (*2*) shall be deemed to be the standard plan of the *bustee*.

(*4*) When the Corporation cause a plan to be prepared under sub-section (*1*), they may charge the said owners therefor at a rate not exceeding five rupees *per bigha*.

Suspension of building pending preparation of standard plan

**340.** When the owner of a *bustee* has been required under section 338 to prepare a plan, no new building which is a hut shall be erected and no hut shall be added to within the *bustee* until a plan has been prepared and approved under that section or under section 339.

Prohibition of building contrary to standard plan

**341.** When a standard plan has been approved for any *bustee* under section 338 or section 339, no new building which is a hut shall be erected and no hut shall be added to in such *bustee* unless the hut, or the portion to be added, as the case may be, occupies a site, or portion of a site, marked in the standard plan as the site for a hut.

Power to Corporation to require removal of hut not in conformity with standard plan

**342.** (*1*) When a standard plan has been approved for any *bustee* under section 338 or section 339, the Corporation may at any time, by written notice, require the owner of any hut in such *bustee*, which is not in conformity with the standard plan, to remove the whole or any portion of such hut.

(*2*) When a hut or portion of a hut has been removed in compliance with a requisition made under sub-section (*1*), the owner thereof shall be entitled to receive from the Municipal Fund such compensation calculated according to the estimated value of the structure removed, less the value of the materials, if the owner elects to take these, as the Corporation may determine.

Power to Corporation to require carrying out of other improvements in conformity with standard plan

**343.** (*1*) The Corporation may at any time, by written notice, require the owner of any *bustee* for which a standard plan has been prepared under section 338 or section 339—

(*a*) to construct the drains, privies, streets and passages, provide the means of lighting, water-supply and common bathing arrangements, and carry out the other improvements shown in such plan, so far as may be practicable having regard to the existing arrangement of the huts, and

(*b*) if any tank, well or low land is shown in such plan as to be conserved or filled up, to conserve or fill up such tank, well or low land.

*(Part V.—Chapter XXII.—Bustees.—Section 344.)*

(2) Until such notice is complied with, the Corporation may refuse to sanction the erection of a new building which is a hut or the making of any addition to any hut in the *bustee*.

Inspection, report and preparation of standard plan by registered medical practitioner and engineer, in cases requiring expedition

**344.** (1) If it appears to the Corporation that any *bustee*,—

(a) by reason of the manner in which the huts are crowded together, or

(b) for any other reason,

is in such an unhealthy condition that the procedure provided by the foregoing sections of this chapter would be too dilatory to meet the emergency,

they may, after giving notice to the owners of the *bustee*, cause the *bustee* to be inspected by two persons appointed in that behalf, one of whom shall be a medical officer of the Corporation or a person holding the diploma of Public Health or having such other qualifications as may be prescribed by the Corporation in this behalf, and the other an engineer. In appointing such persons the Corporation shall consider any proposals made by the owner of the *bustee* in this connection.

(2) The said persons shall forthwith—

(a) make, sign and submit a written report on the sanitary condition of the *bustee*, and

(b) annex to the report a plan approved by them as a proper standard plan of such *bustee*, and

(c) certify—

(i) which of the improvements required to bring the *bustee* into conformity with such plan should be taken in hand forthwith in consequence of the unhealthy condition of the *bustee*, and

(ii) which (if any) of such improvements should be deferred for action under the foregoing sections of this chapter.

(3) The improvements referred to in sub-clauses (i) and (ii) of sub-section (2) shall be specified in two separate schedules which shall be annexed to the report and called Schedule A and Schedule B, respectively.

(4) The said schedules shall clearly indicate—

(a) the huts which should wholly or in part be removed,

(b) the streets, passages and drains which should be constructed,

(c) the means of lighting, water-supply, common bathing arrangements and common privy accommodation to be provided for the use of the tenants,

*(Part V.—Chapter XXII.—Bustees.—Sections 345—347.)*

(*d*) the tanks, wells and low lands which should be filled up,

(*e*) any other improvements which the two persons appointed under sub-section (*1*) may consider necessary in order to remove or abate the unhealthy condition of the *bustee*, and

(*f*) any masonry building within the *bustee*, and any land pertaining to such building which it may be necessary to purchase or acquire for the purpose of making such streets or passages, or effecting any such improvement.

(*5*) A report (together with the schedules annexed thereto) made and signed under this section by any two persons appointed under sub-section (*1*) shall be sufficient evidence of the result of such inspection.

Approval by Corporation of standard plan and schedules annexed to such report

**345.** (*1*) The Corporation shall consider every report (together with the plan and Schedules A and B annexed thereto) made under section 344, and, after hearing the objections (if any) of the owner of the *bustee* in respect of which the report has been made, and of any owner of any hut which is required to be demolished or altered and of the owner of any masonry building which is to be dealt with under sub-section (*4*) of section 344, may approve such plan and schedules after making such modifications (if any) therein as they may think fit.

(*2*) The plan so approved shall be deemed to be the standard plan of such *bustee*.

Power to Corporation to require owners or occupiers to carry out improvements specified in Schedule A

**346.** When Schedule A, annexed to a report made under section 344, has been approved under section 345, the Corporation may cause a written notice to be served upon—

(*a*) the owners of the huts referred to in such Schedule A, or

(*b*) the owners of the *bustee* in which such huts are situated,

requiring them to carry out all or any of the improvements specified in that schedule or any portion of such improvements.

Payment of expenses incurred in carrying out improvements.

**347.** When any improvements required by a notice under section 346 are carried out by the Corporation under section 510, all expenses incurred thereby, including such reasonable compensation as the Corporation may think fit to pay to the owners or occupiers of huts removed,

shall be paid by the owner of the *bustee* to the Corporation and shall constitute a charge upon such *bustee* :

Provided that, notwithstanding anything contained in section 516, if it appears to the Corporation that any such owner is unable, by reason of poverty, to pay such expenses or any portion thereof, in the case of expenses relating to work which should, in

*(Part V.—Chapter XXII.—Bustees.—Sections 348—351.)*

the opinion of the Corporation, have been done by the owners or occupiers of huts within the *bustee*, they may order the same or any portion thereof to be paid out of the Municipal Fund, and in the case of expenses which should be paid by the owner of the *bustee*, they may order the same or any portion thereof to be advanced out of the Municipal Fund, but thereafter to constitute a charge upon such *bustee*.

Disposal by the Corporation of materials of huts pulled down

**348.** (*1*) If, in carrying out any improvement as provided in section 346, the Corporation cause any hut or portion of a hut to be pulled down, they shall—

(*a*) cause the materials of such hut or portion of a hut to be given to the owner of the hut if such owner elects to take them; or

(*b*) if the owner does not elect to take the materials, or if the owner be unknown or the title to the hut be disputed, cause such materials to be sold, and hold in deposit the proceeds of the sale, together with any sum awarded as compensation under section 347.

(*2*) Any amount held in deposit under clause (*b*) of sub-section (*1*) shall be so held by the Corporation until any person obtains an order from a competent Court for the payment to him of such amount.

(*3*) A Court of Small Causes shall be deemed to be a competent Court for the purposes of this section

Power to Corporation to purchase or acquire masonry buildings or land in *bustee*

**349.** The Corporation may, at any time after the receipt of a report made under section 344, purchase or acquire—

(*a*) any masonry building within such *bustee*, or

(*b*) any land appertaining to such building, or

(*c*) any such building, together with the land appertaining thereto or any portion thereof,

which is mentioned in that behalf in Schedule A or Schedule B annexed to such report.

Application of sections 311 to 343 to *bustee* for which standard plan has been approved under section 345

**350.** When a standard plan of a *bustee*, and any Schedule B, annexed to the report made under section 344 with respect to that *bustee*, have been approved under section 345—

(*a*) the provisions of section 311 shall apply to such *bustee*, and

(*b*) the provisions of sections 342 and 343 shall apply to such *bustee* in respect of the improvements indicated in that schedule as provided in section 344, sub-section (*4*).

Alternative power to Corporation to make standard plan, to purchase or acquire *bustee*, and to carry out improvements themselves or through purchaser or lessee.

**351.** (*1*) Notwithstanding anything contained in sections 345 to 350, the Corporation may, after receipt of a report made under section 344 with respect to any *bustee*, and after giving an opportunity of being heard to the owner thereof, pass a resolution to the effect that the *bustee* is an unhealthy area and that, in their opinion, the purchase or acquisition of the *bustee*, or of any portion thereof, is necessary for

the purpose of making the improvements referred to in the said report.

(*2*) When any such resolution has been passed, the Corporation shall make a plan for the improvement of the said *bustee* or portion thereof, together with such estimates as may be necessary for a due understanding of the same, and may then purchase or acquire the said *bustee* or portion thereof, and such plan shall be deemed to be the standard plan of the *bustee*.

(*3*) When any *bustee* or portion of a *bustee* has been so purchased or acquired, the Corporation shall, as soon as is reasonably practicable, either—

(*a*) sell or let the same or part thereof to any person for the purpose and under the condition that he will, as respects the land so sold or leased to him, carry out the improvements shown in such standard plan, or

(*b*) themselves bring the said *bustee* or portion thereof or any part of the same which has not been sold or leased under clause (*a*), into conformity with such standard plan, or

(*c*) proceed under the provisions of section 468 to take measures for the erection of sanitary dwellings for the working classes or for the poorer classes, or for both, on such land.

(*4*) Whenever the Corporation decide to sell or let under sub-section (*3*) any *bustee* or portion thereof so purchased or acquired from any person, they shall offer to the said person or his heirs, executors or administrators a prior right to purchase or take on lease such *bustee* when disposing of the same under sub-section (*3*), if such person applies in this behalf, at such rate and on such terms and conditions as may be fixed by the Corporation, if the Corporation consider that such a right can be given without detriment to the carrying out of the purposes of this Act. If more than one person applies to the Corporation that a *bustee* or portion thereof be sold or let to him, the Corporation shall determine which of such persons has the prior right to take such *bustee* under this section

(*5*) Whenever action is taken under clause (*a*) of sub-section (*3*), the provisions of sub-section (*2*) or sub-section (*3*) of section 471, as the case may be, shall be applicable.

Proportions of area of *bustee* to be shown in standard plan as streets, passages and open lands

**352.** (*1*) No standard plan approved for a *bustee* under this chapter shall, without the consent of the owner thereof, show more than—

(*a*) one-fourth of the whole area of such *bustee* as streets or passages, or

*(Part V.—Chapter XXII.—Bustees.—Sections 353, 354.)*

(*b*) one-third of such area as open lands not to be built upon, whether such open lands be common ground, streets, passages or spaces behind a line of huts.

(*2*) In calculating the said proportions of one-fourth and one-third of any such area, no tank situated therein that has not been filled up shall be taken into account.

Regulation of plots by standard plan, and compensation for adjustment of plots

**353.** (*1*) When the land included in a *bustee* is owned by more owners than one, each owning one or more separate plots of such land, the standard plan approved under this chapter for such *bustee* shall, as far as practicable, provide—

(*a*) for one or more huts being completely contained in each such plot, and

(*b*) for such proportion of each such plot being taken for streets, passages and open land as is specified in section 352.

(*2*) If a greater proportion of any one such plot than the proportion specified in section 352 is so taken, such standard plan shall indicate—

(*i*) the compensation which shall be payable to the owner of such plot, and

(*ii*) the persons who are liable to pay such compensation by reason of their benefiting by such greater proportion having been taken.

(*3*) If no person can equitably be called upon to pay such compensation, the same shall be paid by the Corporation.

(*4*) Any compensation payable under this section to the owner of any land in a *bustee* shall not be paid until such land has been brought into complete conformity with the standard plan.

Streets and passages shown in standard plan, if not public streets, to remain private

**354.** (*1*) Every street or passage in a *bustee* which is shown in the standard plan approved under this chapter for that *bustee* and which is not already a public street, shall, unless the Corporation and the owners of the land on which such street or passage is situated otherwise consent as provided in section 318, be deemed to be a private street; and the portion thereof which falls on the land of each owner shall belong to such owner:

Provided that any portion of any such street or passage which is situated on land purchased or acquired by the Corporation under section 349 shall remain the property of the Corporation.

(*2*) Every such private street shall, at all times, be kept open for scavenging purposes and for all other purposes of this Act in such manner as the Corporation may require, and shall also be kept open for the use of all the tenants of the *bustee*:

Provided that, notwithstanding anything contained in the Indian Limitation Act, 1908, no use of any such street shall, by reason of any lapse of time, be held to confer a right of way on the public so as to bring the street within the definition of a "public street", in clause (*57*) of section 3. IX of 1908

*(Part V.—Chapter XXII.—Bustees.—Sections 355-357.)*

Bathing arrangements and privy accommodation in *bustee*, as shown in standard plan, to be kept open for use of tenants.

**355.** The bathing arrangements and privy accommodation in a *bustee*, which are shown in the standard plan approved under this chapter for such *bustee* as being common to the use of all or some of the tenants of the *bustee*, shall at all times be kept available for the use of such tenants:

Provided that, notwithstanding anything contained in the Indian Limitation Act, 1908, if at any time the land on which any such bathing arrangements or privy accommodation are provided ceases to form part of such *bustee*, no such use shall, by reason of any lapse of time, be held to confer any right on any person so as prejudicially to affect the rights of the owner of such land. IX of 1908

Owner of land in *bustee* to maintain certain conveniences on his land

**356.** (*1*) The owner of any land in a *bustee*, for which a standard plan has been approved under this chapter, shall maintain in proper order and repair, to the satisfaction of the Corporation, such streets, passages, drains, common bathing arrangements, common privy accommodation, means of lighting, means of water-supply and other works on such land as may be shown in the plan.

(*2*) The Corporation may, at any time, cause a written notice to be served upon such owner requiring him so to maintain such streets, passages, drains, common bathing arrangements, common privy accommodation, means of lighting, means of water-supply and other works:

Provided that any convenience made by the owner of a hut for his own use shall, subject to such notice as aforesaid, be maintained by him and not by the owner of the *bustee*

(*3*) If the Corporation are satisfied that any street, passage, drain, bathing arrangements, privy accommodation, means of water-supply or other work or any portion thereof, has been damaged by any tenant or tenants of the *bustee*, the Corporation may, if they think it desirable to do so, call upon such tenant or any one or more of such tenants by a written notice to repair such street, passage, drain, bathing arrangements, privy accommodation, means of water-supply or other work or portion thereof.

Rights of land-owner and hut-owner, respectively, over streets, land and drains shown in standard plan.

**357.** (*1*) The owner of any land in a *bustee*, for which a standard plan has been approved under this chapter, shall be deemed to be the occupier of—

(*a*) all the streets, passages and common ground,

(*b*) all drains provided for the use of more than one hut, and

(*c*) the common bathing arrangements, common privies and means of lighting the *bustee*,

on such land, so far as the same are constructed in accordance with the standard plan.

*(Part V.—Chapter XXII.—Bustees.—Sections 358, 359.)*

(*2*) The owner of any hut in such *bustee* shall be deemed to be the occupier of—

(*i*) the land on which such hut stands,

(*ii*) the open space behind such hut which appertains thereto, and

(*iii*) every drain, privy, means of lighting or water connection (if any) provided for the sole use of such hut.

*Bustee* when to be deemed a remodelled *bustee*

**358.** When a *bustee* has been brought into conformity with the standard plan approved under this chapter for such *bustee*, it shall be deemed to be a remodelled *bustee*.

Power to owner to take land out of the category of *bustee* in certain cases.

**359.** (*1*) The owner of any land included in a *bustee* and bearing a separate number in the assessment-book may, at any time, whether a standard plan for the *bustee* has been prepared under this chapter or not, send a written notice to the Corporation that he intends to remove all the huts standing on such land.

Provided that the receipt of any such notice by the Corporation shall not be a bar to the approval by the Corporation, under this chapter, of a standard plan of such *bustee*.

(*2*) From the date of such notice no application shall be entertained for erecting on such land any new building which is a hut or adding to any hut standing thereon.

(*3*) Such owner shall, within six months after the date of such notice, or within such further time as the Corporation may from time to time allow, remove all huts standing on such land, and, if he does not do so, the notice shall be deemed to be cancelled.

(*4*) When all such huts have been so removed, such land shall, according to its situation, either—

(*i*) be altogether excluded from the limits of the *bustee*, or

(*ii*) be shown in a standard plan approved for the *bustee* under this chapter, as not being a part of such *bustee*:

Provided that, if in the standard plan any street or passage is shown on such land, the provisions of sections 343, 346, 350, 354, 356 and 357 shall, with all necessary modifications, be deemed to apply to such street or passage unless the Corporation otherwise direct.

(*5*) If, after all the huts standing on any land have been removed under sub-section (*3*), any application is received for erecting any hut on such land, the Corporation may, by written notice, require the owner of the land to carry out such improvements included in the standard plan as they may think fit.

(*6*) When all the huts standing on any land within a *bustee* have been removed under sub-section (*3*), the Corporation may either—

(*a*) cancel the standard plan (if any) already approved, under this chapter, for such *bustee*, or

*(Part V.—Chapter XXII.—Bustees.—Sections 360, 361.)*

(*b*) modify such plan, after hearing the objections (if any) of any owner of land included in such *bustee*.

(*7*) Where any land, formerly included in a *bustee*, ceases to be so included, and where any street or passage was shown on such land in the standard plan and where on such land ceasing to be so included the Corporation do not consider it to be practicable or do not consider it to be expedient to change the alignment of such street they shall, in applying the proviso to sub-section (*4*) to such street, compensate the owner of such land for any area that is included in such street which is in excess of one-seventh of the entire area of the land which ceases to be included in the *bustee*.

*Bustee streets.*

Power to Corporation to prescribe alignments for *bustee* streets

**360.** (*1*) In any *bustee*, in respect of which a standard plan has not been prepared, or in any area in which it appears to the Corporation that huts are likely to be erected, the Corporation may, after hearing the objections, if any, of any owner of land in such *bustee*, prescribe alignments, not more than sixteen feet in width, for such private streets as they may think fit.

(*2*) When the land within such *bustee* or area is owned by more owners than one, each owning one or more separate plots of such land, such alignments shall, as far as practicable, be so prescribed as not to occupy, within any such plot, more than one-fifth of the area thereof and shall not ordinarily be less than two hundred and fifty feet apart.

(*3*) If, in any such plot, more than one-fifth of the area thereof is occupied by such alignments, the Corporation shall pay reasonable compensation to the owner of the plot:

Provided that no such compensation shall be paid in respect of any such plot as long as any hut or other structure other than a masonry building is left standing within any such alignment in the plot.

(*4*) No hut or portion of a hut shall be erected within any alignment prescribed under sub-section (*1*).

(*5*) The provisions of section 351 shall, with all necessary modifications, be deemed to apply to every street the alignment for which has been prescribed under this section.

Power to Corporation to require removal of existing huts within street or hut alignment in *bustee*.

**361.** (*1*) In any *bustee*, at any time after the expiration of seven years from the time when any alignment has been prescribed—

(*a*) for a street under section 360. or

(*b*) for huts under rule 66 of Schedule XVII,

the Corporation may, by written notice, require the owner of the land or the owners or occupiers of

*(Part V.—Chapter XXII.—Bustees.—Section 362.)*

existing huts to remove such huts or portions thereof as fall—

(*i*) within any such prescribed street alignment, or

(*ii*) within six feet on either side of any such prescribed hut alignment,

as the case may be.

(*2*) When a hut has been removed under the provisions of sub-section (*1*), the Corporation shall pay to the owner thereof such compensation as they may consider to be reasonable, but such compensation shall in no case exceed the value of the hut less the value of the materials thereof.

Power to Corporation to require space to be kept between masonry building in *bustee* and centre line of *bustee* street

**362.** Any person who erects a masonry building—

(*a*) in any *bustee* in respect of which a standard plan has been approved under sections 338, 339 or 345, or

(*b*) in any *bustee* or area in respect of which alignments for streets have been prescribed under section 360,

shall, if so required by written notice issued by the Corporation, leave a clear space of fifteen feet between the centre line of any street or passage shown in such plan, or of any street the alignment for which has been so prescribed, as the case may be, and the nearest part of such building.

(*Part V.*)

## CHAPTER XXIII.

### DEMOLITION, ALTERATION AND STOPPING OF UNLAWFUL WORK.

Demolition or alteration of building work unlawfully commenced, carried on or completed

**363.** (*1*) If the Corporation are satisfied—

(*1*) that the erection of any new building—

(*a*) has been commenced without obtaining the written permission of the Corporation, or

(*b*) is being carried on or has been completed otherwise than in accordance with the particulars on which such permission was based, or

(*c*) is being carried on or has been completed in breach of any provision contained in this Act or in any rules or by-laws made thereunder, or of any direction or requisition lawfully given or made under this Act or under such rules or by-laws, or

(*2*) that any alteration of, or addition to, any building or any other work made or done for any purpose in, to or upon any building, has been commenced or is being carried on or has been completed in breach of, or otherwise than in accordance with, any sanction granted under sections 330, 340 or 341, or

(*3*) that any alterations required by any notice issued under rule 22 of Schedule XVII have not been duly made,

they may, after giving the owner of such building an opportunity of being heard, apply to a Magistrate, and such Magistrate may make an order directing that such erection, alteration, addition or other work, as the case may be, or so much thereof as has been executed unlawfully as mentioned in clauses (*1*), (*2*) or (*3*),

or that any structure, specified under the *Explanation* to clause (*d*) of rule 53, or the *Explanation* to clause (*iv*) of rule 81, of Schedule XVII as a structure to be demolished or altered, shall—

(*i*) be demolished by the owner thereof or altered by him in accordance with the order of the Magistrate to the satisfaction of the Corporation, as the case may require, or

(*ii*) be demolished or altered by the Corporation at the expense of the said owner :

Provided that the Magistrate—

(*a*) shall not make any order under this section without giving the owner and occupier of the building to be so demolished or altered full opportunity of adducing evidence and of being heard in his defence, and

*(Part V.—Chapter XXIII.—Demolition, alteration and stopping of unlawful work.—Section 364.)*

(*b*) may make any such order notwithstanding the fact that a valuation of such building has been made by the Executive Officer under Chapter X for the assessment of the consolidated rate:

Provided that where the Corporation have instituted proceedings under section 493, no application shall be made under this section.

(*2*) Notwithstanding anything contained in sub-section (*1*), no proceedings shall be instituted thereunder in respect of any work which has been done more than five years before the institution of such proceedings

Provided that the onus of proving that the work was done more than five years previously shall lie on the owner

Demolition or alteration of work in other cases

**364.** (*1*) In any of the following cases, namely,—

(*1*) if, within the period prescribed in any notice issued under section 299, sub-section (*1*), requiring the removal or alteration of a verandah, platform or other similar structure or a fixture, the same be not duly removed or altered, or

(*2*) if the owner of any building erected or added to between a street alignment and the building-line fails to remove such building or addition when called upon by the Corporation to do so under section 303, sub-section (*3*), or

(*3*) if any person who makes any additions to a building in pursuance of an agreement executed under the proviso to sub-section (*1*) of section 303, fails to remove such additions when called upon by the Corporation to do so, or

(*4*) if the owner of any building erected or added to under the provisions of section 309 fails to remove such building or addition when called upon to do so, or

(*5*) if the owner of any building, which is unfit for human habitation, fails to demolish such building when required to do so under section 382, sub-section (*2*), or

(*6*) if any privy or urinal be placed in contravention of rule 21 or rule 22, sub-rule (*1*), of Schedule XV, or

(*7*) if, within the period prescribed in any notice issued under rule 2, sub-rule (*5*), of Schedule XVI, requiring the owner or occupier of a building to comply with any condition on which the erection of any verandah or other projection was permitted, such condition is not complied with, or

*(Part V.—Chapter XXIII.—Demolition, alteration and stopping of unlawful work.—Section 365.)*

(*8*) if, within the period prescribed in any notice issued under rule 2, sub-rule (*6*), of Schedule XVI, requiring the owner or occupier of a building to remove a verandah or other projection, the same be not duly removed, or

(*9*) if, within the period prescribed in any notice issued under rule 7, sub-rule (*2*), of Schedule XVII, requiring the owner of a building to remove or alter an external roof or wall made of inflammable material, the same be not duly removed or altered, or

(*10*) if any owners or occupiers neglect to execute any works or to take any measures required by any notice affixed under rule 6, sub-rule (*1*), of Schedule XVIII,

the Corporation may apply to a Magistrate, and such Magistrate may make an order directing that the projection, building, block of buildings, verandah, platform, fixture, additions, roof, wall, privy or urinal, as the case may be, shall—

(*a*) be demolished by the owner thereof or altered by him to the satisfaction of the Corporation, or

(*b*) be demolished or altered by the Corporation at the expense of such owner:

Provided that, before making such application, the Corporation shall give the owner or occupier an opportunity of being heard on his behalf:

Provided also that the Magistrate—

(*i*) shall not make any order under this section without giving the owner and occupier of the structure to be so demolished or altered full opportunity of adducing evidence and of being heard in his defence, and

(*ii*) may make any such order notwithstanding the fact that a valuation of such building has been made by the Executive Officer under Chapter X for the assessment of the consolidated rate:

Provided also that where the Corporation have instituted proceedings under section 493, no application shall be made under this section.

(*2*) The provisions of sub-section (*2*) of section 363 shall apply, *mutatis mutandis*, to the institution of proceedings under this section.

Power to Corporation to stop progress of building work unlawfully commenced or carried on.

**365.** (*1*) In any case in which the erection of a new building, or any other work referred to in section 363, has been commenced, or is being carried on unlawfully as mentioned in that section, the Corporation may, by written notice, require the person carrying on such erection or other unlawful work to stop the same, pending the decision of a Magistrate on an application to be made to him under that section.

(*2*) If any notice issued under sub-section (*1*) is not duly complied with, the Corporation may, with the assistance of the police, if necessary, take such steps as they may deem needful in order to stop the continuance of the unlawful work.

(*Part V.—Chapter XXIII.—Demolition, alteration and stopping of unlawful work.—Section 365.*)

(*3*) If it appears to the Corporation that it is necessary, in order to prevent the continuation of the unlawful work, to depute any police or municipal officer to watch the premises, they may require the person to whom the said notice was addressed to bear the cost of providing the same.

(*4*) Pending the decision of the Magistrate in accordance with sub-section (*1*), the Corporation may hear the person concerned and thereupon determine whether their order for stopping the work shall remain in force or shall be suspended until the Magistrate makes his decision.

(*Part V.*)

## CHAPTER XXIV.

### LIGHTING AND SCAVENGING, AND REGULATION OF PUBLIC BATHING AND WASHING.

*Lighting.*

Provision for lighting of public streets, squares, gardens, markets and buildings

**366.** (*1*) The Corporation shall—

(*a*) take measures for lighting, in a suitable manner, the public streets, squares and gardens and municipal markets and all buildings vested in the Corporation;

(*b*) procure, erect and maintain such number of lamps, lamp-posts and other appurtenances as may be necessary for such lighting; and

(*c*) cause such lamps to be lighted by means of oil, gas, electricity or such other light as the Corporation may from time to time determine.

(*2*) The Corporation may place and maintain—

(*i*) electric wires or gas-pipes for the purpose of lighting such lamps under, over, along or across any immovable property, and

(*ii*) posts, poles, standards, stays, struts, brackets, tunnels, culverts or any other suitable contrivance for carrying, suspending, or supporting such lamps, gas-pipes or electric wires in or upon any immovable property:

Provided that such pipes, wires, posts, poles, standards, stays, struts, brackets, tunnels, culverts or other contrivance shall be so placed as to occasion as little damage, detriment, inconvenience or nuisance to any person as the circumstances permit.

(*3*) Notwithstanding anything contained in the Indian Electricity Act, 1910, the Corporation shall not be liable except on the ground of negligence to any claim for compensation for any damage, detriment, inconvenience or nuisance caused by them, or by any one employed by them, in the exercise of any of the powers conferred by sub-section (*2*). IX of 1910.

Provision for lighting of private street by Corporation on application of owner

**367.** The Corporation, on the application of the owners of a private street, may enter into arrangements for the lighting of such street on such terms as may be agreed upon between them and such owners, and shall thereafter in respect of such street have all the powers conferred by section 366.

Streets, etc., not to be constructed over municipal gas-pipe without permission

**368.** (*1*) Without the written permission of the Corporation—

(*a*) no private street shall be constructed, and

(*b*) no building, wall or other structure shall be newly erected,

over any gas-pipe belonging to the Corporation

*(Part V.—Chapter XXIV.—Lighting and scavenging, and regulation of public bathing and washing —Sections 369—371.)*

(2) If any private street be so constructed, or if any building, wall or structure be so erected, the Corporation may cause the same to be removed or otherwise dealt with as they may think fit,

and the expenses incurred by the Corporation in so doing shall, in the discretion of the Corporation, be paid by the owner thereof or by the person offending

*Keeping of animals*

Prohibition as to keeping animals

**369.** No person shall—

(*a*) without the written permission of the Corporation, or otherwise than in conformity with the terms of such permission, keep any swine in any part of Calcutta;

(*b*) keep any animal on his premises so as to be a nuisance or dangerous, or

(*c*) feed any animal, or suffer or permit any animal to be fed or to feed, with or upon sewage or offensive matter.

Destruction of stray swine

**370.** Any swine found straying may be forthwith destroyed, and the carcasses thereof disposed of, as the Executive Officer may direct, and no claim shall lie for compensation for any swine so destroyed

*Scavenging.*

Provision or appointment of receptacles, depôts and places for deposit or disposal of rubbish, offensive matter, sewage and carcasses

**371.** (*1*) The Corporation shall provide or appoint, in proper and convenient situations, public receptacles, depôts and places for the temporary deposit or final disposal of rubbish, offensive matter, sewage and the carcasses of dead animals accumulating in Calcutta:

Provided as follows—

(*i*) the said things shall not be finally disposed of in any place or manner in which the same have not heretofore been so disposed of, without the sanction of the Corporation, or in any place or manner which the Local Government may disallow,

(*ii*) the powers conferred by this section shall be exercised in such manner as to create the least practicable nuisance.

(*2*) Any land that may be required in a *bustee* for the temporary deposit of rubbish, offensive matter, sewage or carcasses taken from land or buildings in such *bustee* shall be provided by the owner of the *bustee*.

(*3*) All things deposited in receptacles, depôts or places provided or appointed under this section shall be the property of the Corporation.

*(Part V.—Chapter XXIV.—Lighting and scavenging, and regulation of public bathing and washing. —Sections 372, 373.)*

Collection and temporary deposit of rubbish and offensive matter by occupiers of premises

**372.** (*1*) The Corporation may, by public notice, direct that all rubbish and offensive matter accumulating in any premises in any street or quarter of Calcutta specified in the notice shall be collected by the occupier of such premises and deposited in a box, basket or other receptacle, of a kind prescribed by the Corporation, to be provided by such occupier and kept near the entrance to, or, where open space is available, within, the premises

(*2*) The Corporation may cause public dust-bins or other convenient receptacles to be provided at suitable intervals and in proper and convenient situations in streets or quarters in respect of which no notice issued under sub-section (*1*) is for the time being in force,

and may, by public notice, direct that all rubbish and offensive matter accumulating in any premises, the entrance to which is situated within fifty yards of any such receptacle, shall be collected by the occupier of such premises and deposited in such receptacle.

(*3*) The Corporation may, by public notice, direct that all rubbish and offensive matter accumulating in any premises in any street or quarter in respect of which no notice issued under sub-section (*1*) or sub-section (*2*) is for the time being in force, shall be collected by the occupier of such premises and deposited in lump in the street on which such premises abut or in some portion of such premises

(*4*) In any notice issued under any of the foregoing sub-sections, the Corporation shall prescribe the hours within which rubbish and offensive matter shall be deposited under this section

Collection and removal of rubbish and offensive matter accumulating in the course of business or building operations

**373.** Notwithstanding anything contained in section 372, when building operations are being carried on in any premises, or when any premises are used for carrying on any manufacture, trade or business, the Corporation may,—

(*a*) by written notice, direct the occupier of such premises to collect all rubbish and offensive matter accumulating on such premises in the course of such operations, manufacture, trade or business and to remove the same, at such times, in such carts or receptacles, and by such routes as may be specified in the notice, to a public receptacle, depôt or place provided or appointed under section 371; or

(*b*) after giving such occupier written notice of their intention to do so, themselves cause all the rubbish and offensive matter to be removed, and charge the occupier for such removal such periodical fee as may be specified in the notice:

Provided that the requisition under clause (*a*) shall not be enforced by the Corporation, nor shall action be taken by them under clause (*b*), until the occupier of the premises has been given an opportunity of being heard within such time as may be specified in the written notice that is served on him.

*(Part V.—Chapter XXIV.—Lighting and scavenging, and regulation of public bathing and washing —Sections 374—377.)*

Establishment for removal of sewage, etc., and the scavenging of streets

**374.** The Corporation shall maintain an establishment for the removal of sewage from privies and urinals which are not connected with a sewer, and of offensive matter and rubbish from receptacles, depôts and places provided or appointed under section 371, or under any by-law made under this Act, and for the daily cleansing and scavenging of streets and premises.

Presumption as to offender

**375.** If in any case it is proved that rubbish, offensive matter or sewage has been deposited in any place in contravention of any by-law made under this Act, from some land or building, it shall be presumed, unless and until the contrary is proved, that the offence has been committed by the occupier of the said land or building

Notice to be given by *mehters*, etc., before withdrawing from work

**376.** No *mehter* or other servant of the Corporation, who is employed to remove or otherwise deal with sewage, offensive matter or rubbish, shall, without the permission of the Corporation, withdraw from his duties without giving written notice, not less than one month previously, of his intention so to withdraw.

*Public bathing and washing*

Construction of places for public bathing etc

**377.** The Corporation may from time to time—

(*a*) construct suitable places for use by the public as swimming baths or for bathing, or for washing animals, or for washing or drying clothes, and

(*b*) prohibit, by public notice, the use by the public, for any of the said purposes, of any place not so constructed

*(Part V.)*

## CHAPTER XXV.

### MUNICIPAL RAILWAYS.

Power to Corporation to construct, lease and otherwise deal with railways

**378.** With the previous sanction of the Governor General in Council, the Corporation may—

(*a*) upon any of the public streets in Calcutta, or upon any land within or without Calcutta which is vested in the Corporation, construct or maintain any railway which may appear to them to be useful or necessary for the removal of rubbish and offensive matter or for any of the other purposes of this Act,

(*b*) use and employ upon any such railway locomotive engines or other motive power, and carriages and wagons to be drawn or propelled thereby,

(*c*) carry and convey passengers and goods upon any such railway,

(*d*) make such reasonable charges in respect of such passengers or goods as the Corporation may from time to time determine,

(*e*) from time to time enter into any contract with any person for the construction, maintenance and working of any such railway within or without Calcutta,

(*f*) from time to time enter into any contract with any person for the passage over any such railway of locomotive engines or other motive power, carriages and wagons belonging to or controlled by such person, upon the payment of such tolls or rent, and under such conditions and restrictions, as may be mutually agreed upon, and

(*g*) lease any such railway to any person, upon such terms and under such conditions and restrictions as may be mutually agreed upon.

Certain powers to lessee of Corporation's railway.

**379.** Any person to whom a railway is leased under clause (*g*) of section 378 shall, subject to the terms, conditions and restrictions of his lease, have the same powers for—

(*i*) maintaining the railway,

(*ii*) using and employing thereupon locomotive engines or other motive power and carriages and wagons to be drawn or propelled thereby, and

(*iii*) carrying and conveying thereupon passengers and goods and making charges in respect thereof,

as the Corporation would have had if the railway had not been so leased.

(*Part V*)

## CHAPTER XXVI.

### INSPECTION AND REGULATION OF PREMISES, AND OF FACTORIES, TRADES AND PLACES OF PUBLIC RESORT.

*Premises generally.*

Inspection and regulation of premises

**380.** Subject to the provisions of this Act, land and buildings shall respectively be inspected, cleansed, secured, repaired, drained, or otherwise regulated in accordance with the rules contained in Schedule XVIII.

Procedure in case of buildings deemed unfit for human habitation

**381.** (*1*) If, for any reason, any building or portion of a building intended for, or used as, a dwelling-place appears to the Corporation to be unfit for human habitation, they may require the owner or occupier of such building to make such alterations as they think necessary in the building in order to make it fit for human habitation, if they consider that this can be done; but whether they think it can be made fit for human habitation or not, they may, in either case, after giving the owner or occupier an opportunity of being heard, apply to a Magistrate to prohibit the further use of such building or portion thereof for such purpose;

and the Magistrate shall serve a notice on such owner or occupier so as to give him an opportunity of being heard in the Court, and, after such inquiry as he thinks fit to make, may, by written order, prohibit the further use thereof, or may pass such other order as he may deem just and proper

(*2*) When any such prohibition has been made, the Corporation may—

(*i*) inspect such building by day or by night, and

(*ii*) take such order as may be necessary to preclude the further use of the same, or of the portion specified in the prohibition, as a human habitation.

(*3*) When any such prohibition has been made, no owner or occupier of such building shall use, or suffer the same, or the portion specified in the prohibition, to be used for human habitation until—

(*a*) the Executive Officer certifies in writing that the causes rendering it unfit for human habitation have been removed to his satisfaction, or

(*b*) a Magistrate, by written order, withdraws the prohibition.

(*4*) The Corporation shall prepare and maintain at the Municipal office a list of buildings in respect of which the Magistrate has passed an order under sub-section (*1*), and such list shall contain such particulars as to the action taken by the Corporation or the owner in pursuance of such order or otherwise, as the Executive Officer shall think fit and shall be open to inspection by the public free of charge.

*(Part V.—Chapter XXVI.—Inspection and regulation of premises, and of factories, trades and places of public resort.—Sections 382, 383.)*

Power to Corporation to require demolition of, or execution of work on, building unfit for human habitation

**382.** (*1*) When a Magistrate has prohibited the use of a building for human habitation under section 381 and such prohibition has been in force for three months, the Corporation shall take into consideration the question of the demolition of such building,

and shall give notice of the time (being some time not less than one month after the service of the notice) and place at which such question will be considered to the owner and to the occupier (if any) of the building,

and the said owner and occupier shall be entitled to be heard when the question is so taken into consideration.

(*2*) If, upon such consideration, the Corporation are of opinion that the building has not been rendered fit for human habitation, and that the necessary steps are not being taken with all due diligence to render it so fit,

they shall cause a written notice to be served on the said owner and occupier and also to be put on some conspicuous part of such building, requiring such owner and occupier to demolish the building or any portion thereof, as the case may be, or to execute such work as in the opinion of the Corporation may be necessary to render the building fit for human habitation.

(*3*) If such owner or occupier undertakes to execute with due diligence the work necessary to render the building fit for human habitation, and the Corporation consider that it can be so rendered fit for human habitation,

the Corporation may postpone the operation of the said notice for such time as they think sufficient for the purpose of giving the said owner or occupier an opportunity of executing the necessary work.

Power to Corporation to call for statement of accommodation

**383.** (*1*) The owner of any building shall, within a period of a fortnight after receipt of a written notice from the Corporation requiring him to do so, submit to the Corporation a signed statement of the following particulars with respect to such building or any part thereof, namely,—

(*a*) the total number of rooms in the building,

(*b*) the length, breadth and height of each room, and

(*c*) the name of the person to whom he has let the building or each part of the building occupied as a separate tenement, with the particulars specified in clauses (*a*) and (*b*) in regard to each such part.

(*2*) The occupier of any building or of any part of any building occupied as a separate tenement shall, on like notice and within the like period, submit a

*(Part V.—Chapter XXVI.—Inspection and regulation of premises, and of factories, trades and places of public resort.—Sections 384, 385.)*

signed statement of the following particulars with respect to the building or part thereof, as the case may be, which is in his occupation, namely,—

(*i*) the total number of persons dwelling in such building or part, and

(*ii*) the total number of adults and the total number of children occupying each room used for sleeping.

Abatement of overcrowding in dwelling-house or dwelling place

**384.** (*1*) If it comes to the knowledge of the Corporation from a statement received under section 383, or after an inspection made under rule 1 of Schedule XVIII, or in any other way, that a dwelling-house, or a public building or hut which is used as a dwelling-place, or any room in any such house, public building or hut, is so overcrowded as to endanger the health of the inmates thereof, they may require the owner to abate such overcrowding in the manner specified in such requisition. After giving the owner an opportunity of being heard in regard to such requisition, the Corporation may direct him within such time as they may fix to take such measures as they think fit to abate such overcrowding. If the owner fails to take such measures, the Corporation may apply to the Magistrate to abate such overcrowding.

The Magistrate, after such inquiry as he thinks fit to make, may, by written order, require the owner of the building or room, within such time as the Magistrate may prescribe in the said order, to abate such overcrowding by reducing the number of lodgers, tenants or other inmates of the building or room, or may pass such other order as he may deem just and proper.

Every such order shall be binding and operative on the owner as well as on the occupier, and every occupier shall, on the written requisition of the Corporation informing him of the order, be bound to vacate the same within such time as may be specified in such requisition.

(*2*) If the owner of any building or room referred to in sub-section (*1*) has sub-let the same, the landlord of the lodgers, tenants or other actual inmates of the same shall, for the purposes of this section, be deemed to be the owner of the building or room.

*Factories, trades and places of public resort*

Factory, etc., not to be newly established, etc., without permission of the Corporation

**385.** (*1*) No person shall, without the previous written permission of the Corporation, newly establish in any premises, or materially alter, enlarge or extend, any factory, workshop or workplace in which it is intended to employ steam, electricity, water or other mechanical power

*(Part V.—Chapter XXVI.—Inspection and regulation of premises, and of factories, trades and places of public resort.—Sections 386, 387.)*

(2) The Corporation may refuse to give such permission, if they are of opinion that the establishment, alteration, enlargement or extension of such factory, workshop or workplace in the proposed position would be objectionable by reason of the density of the population in the neighbourhood thereof, or would be a nuisance to the inhabitants of the neighbourhood.

Premises not to be used for certain purposes without a license

**386.** (1) No person shall use or permit to be used any premises for any of the following purposes without or otherwise than in conformity with the terms of a license granted by the Corporation in this behalf, namely,—

(a) any of the purposes specified in Schedule XIX;

(b) any purpose which is, in the opinion of the Corporation, dangerous to life, health or property, or likely to create a nuisance,

(c) keeping horses, cattle or other four-footed animals for sale or hire or for sale of the produce thereof; or

(d) storing for other than his own domestic use or selling timber, firewood, charcoal, coal, coke, ashes, hay, grass, straw or any other combustible thing:

Provided that the Corporation may declare that premises in which the aggregate quantity of combustible articles stored for sale does not exceed such quantity as the Corporation may prescribe in respect of any such article shall be exempted from the operation of clause (d).

(2) In prescribing the terms of a license granted under this section for the use of premises as mills or iron yards or for similar purposes, the Corporation may, when they think it practicable, require the licensee to provide a space or passage within the curtilage of the premises for carts for loading and unloading purposes.

(3) The Corporation shall fix a scale of fees to be paid in respect of premises licensed under sub-section (1):

Provided that no such fee shall exceed five hundred rupees.

Power to Corporation to prevent use of premises in particular areas for purposes referred to in section 386.

**387.** (1) The Corporation may give public notice of their intention to declare that in any area specified in the notice no person shall use any premises for any of the purposes referred to in section 386, sub-section (1), which may be specified in such notice.

*(Part V.—Chapter XXVI.—Inspection and regulation of premises, and of factories, trades and places of public resort.—Sections 388, 389.)*

(2) No objections to any such declaration shall be received after a period of one month from the publication of such notice.

(3) The Corporation shall consider all objections received within the said period, giving any person affected by the said notice an opportunity of being heard by them during such consideration, and may thereupon make a declaration in accordance with the notice published under sub-section (1), with such modifications (if any) as they may think fit, but not so as to extend its application.

(4) Every such declaration shall be published in the *Calcutta Gazette*, and in such other manner as the Corporation may determine, and shall take effect from the date of such publication in the *Calcutta Gazette*

(5) No person shall in any area specified in any such declaration use any premises for any of the said purposes.

Discontinuance of use of premises for particular purpose, when kept so as to be a nuisance

**388.** Whenever a Magistrate imposes a fine on any person under section 488 for using or permitting the use of any premises for any purpose in contravention of section 386, sub-section (1), he may, if it is proved to his satisfaction that such premises are kept in such a state as to be a nuisance, also direct that they shall no longer be used for the said purpose.

Prohibition of fouling of water in carrying on trade or manufacture

**389.** (1) No person engaged in any trade or manufacture specified in Schedule XIX shall—

(a) wilfully cause or suffer to flow or be brought into any tank, reservoir, cistern, well, duct or other place for the storage or accumulation of water belonging to the Corporation, or into any drain or pipe communicating therewith, any washing or other substance produced in the course of such trade or manufacture, or

(b) wilfully do any act connected with any such trade or manufacture whereby the water in any such tank, reservoir, cistern, well, duct or other place is fouled or corrupted.

(2) The Corporation may, after giving not less than twenty-four hours' previous notice in writing to the owner or to the person who has the management or control of any works, pipes or conduits connected with any such manufacture or trade, lay open and examine the said works, pipes or conduits

(3) If, upon such examination, it appears that sub-section (1) has been contravened by reason of anything contained in or proceeding from the said works, pipes or conduits, the expenses of such laying open and examination, and of any measure which the Corporation, in their discretion, may require to be adopted for the discontinuance of the cause of such contravention, shall be paid by the owner of the said works, pipes or conduits, or by the person who has the

*(Part V.—Chapter XXVI.—Inspection and regulation of premises, and of factories, trades and places of public resort.—Sections 390, 391.)*

management or control thereof, or through whose neglect or fault the said sub-section has been contravened.

(*4*) If, upon such examination, it appears that there has been no contravention of sub-section (*1*), the said expenses and compensation for any damage occasioned by the said laying open and examination shall be paid by the Corporation.

Eating-houses, etc., not to be used without license from Corporation.

**390.** (*1*) No person shall, without or otherwise than in conformity with the terms of a license granted by the Corporation in this behalf, keep any eating-house, tea-shop, hotel, boarding-house, bakery, aerated water factory, ice factory or other place where food is sold or prepared for sale:

Provided that the fee payable for any such license shall in no case exceed one rupee.

(*2*) The Corporation may at any time cancel or suspend any such license if they are of opinion that the premises covered thereby are not kept in conformity with the conditions of such license or the provisions of any by-law made under section 478, relating to such premises, whether the licensee is prosecuted under this Act or not.

Licensing and control of theatres, circuses and places of public amusement.

**391.** No person shall, without or otherwise than in conformity with the terms of a license granted by the Corporation in this behalf, keep open any theatre, circus or other similar place of public resort, recreation or amusement:

Provided that this section shall not apply to private performances in any such place.

*(Part V.)*

## CHAPTER XXVII.

### MARKETS, BAZARS AND SLAUGHTER-PLACES.

Power to Corporation to provide and maintain municipal markets, slaughter-houses and stock-yards.

**392.** (*1*) The Corporation may—

(*a*) construct, purchase or take on lease any land or building for the purpose of establishing a new municipal market or a new municipal slaughter-house or municipal stock-yard, or of extending or improving any existing municipal market, municipal slaughter-house or municipal stock-yard, and

(*b*) from time to time build and maintain such municipal markets, municipal slaughter-houses and municipal stock-yards and such stalls, shops, sheds, pens and other buildings or conveniences for the use of persons carrying on trade or business in, or frequenting, such markets, slaughter-houses or stock-yards, and provide and maintain in such municipal markets such buildings, places, machines, and correct weights, scales and measures for weighing and measuring goods sold therein, as they may think fit.

(*2*) Municipal slaughter-houses and municipal stock-yards may be situated in or, with the sanction of the Local Government, without Calcutta.

Power to Corporation to close municipal markets, slaughter-houses and stock-yards

**393.** The Corporation may at any time close any municipal market, municipal slaughter-house or municipal stock-yard or any portion thereof, and the premises occupied for any market, slaughter-house or stock-yard or portion so closed may be disposed of as the property of the Corporation.

Power to Corporation to license vendors in municipal markets

**394.** (*1*) No person shall, without a license from the Corporation, sell or expose for sale any animal or article in any municipal market:

Provided that no fee shall be charged for such license.

(*2*) Any person contravening sub-section (*1*) may be summarily removed from such market by any municipal officer or servant.

Power to Corporation to permit opening of new private markets

**395.** (*1*) The Corporation shall from time to time determine whether the establishment of new private markets shall be permitted in Calcutta or in any specified portion thereof

*(Part V.—Chapter XXVII.—Markets, bazars and slaughter-places.—Section 396.)*

(2) No person shall establish a new private market for the sale of, or for the purpose of exposing for sale, animals intended for human food, or any other article of human food, except with the sanction of the Corporation.

(3) When the establishment of a new private market has been so sanctioned, the Corporation shall cause a notice of such sanction to be affixed in the English, Bengali, Hindi and Urdu languages on some conspicuous spot on or near the building or place where such market is to be held.

Power to Corporation to license private markets, slaughter-houses and stock-yards.

**396.** (1) No person shall, without or otherwise than in conformity with the terms of a license granted by the Corporation in this behalf,—

(a) keep open any private market, or wilfully or negligently permit any place to be used as a private market;

(b) use any place in Calcutta as a slaughter-house or stock-yard, or for the slaughtering of any animal intended for human food, or

(c) use any place without Calcutta, whether as a slaughter-house or otherwise, for the slaughtering of any animal intended for human food to be consumed in Calcutta:

Provided as follows:—

(i) the Corporation shall not refuse, suspend or cancel any license for keeping open a private market for any cause other than the failure of the owner thereof to comply with some provision of this Act, or with some by-law made under section 478, at the time in force;

(ii) nothing in the foregoing provisions of this section shall be deemed to restrict the slaughter of any animal in any place on the occasion of any festival or ceremony;

(iii) nothing in the foregoing provisions of this section shall be deemed to prevent the Corporation from setting apart places for the sacrifice of animals in accordance with religious custom, and for the sale of the flesh thereof.

(2) Every such license shall be renewable triennially on the certificate of the Health Officer.

(3) There shall be paid for every license granted under sub-section (1) and in respect of every place set apart under proviso (iii) to that sub-section such annual fee as may be prescribed by the Corporation.

*(Part V.—Chapter XXVII.—Markets, bazars and slaughter-places.—Sections 397—400.)*

(*4*) If any private market or any place set apart under proviso (*iii*) to sub-section (*1*) be closed for more than half of any year for which a fee has been paid, the Corporation may refund the whole or any portion of the fee so paid for that year

(*5*) When the Corporation have refused, suspended or cancelled any license to keep open a private market, they shall cause a notice of their having done so to be affixed in the English, Bengali, Hindi and Urdu languages on some conspicuous spot on or near the building or place where such market has been held

Power to Magistrate to close unauthorised private market

**397.** Whenever a Magistrate imposes a fine on any person under section 488 for keeping open a private market or permitting any place to be used as a private market in contravention of section 396, sub section (*1*), he shall, on the application of the Corporation, but not otherwise, also direct that such market be closed and appoint persons, or take other steps, to prevent the place being used as a market

Prohibition of use of market so closed

**398.** No person shall use as a market any place in respect of which a direction has been given by a Magistrate under section 397

Power to Corporation to require paving and draining of private markets, etc, and to alter structures in such markets

**399.** The Corporation may, by written notice, require the owner or occupier of any private market, *bazar*, private slaughter-house or place set apart under proviso (*iii*) to sub-section (*1*) of section 396—

(*a*) to cause the whole or any portion of the floor of the market-building, market-place, *bazar*, slaughter-house or place set apart as aforesaid to be raised or paved with dressed stone or other suitable material,

(*b*) to cause such drains to be made in or from the market-building, market-place, *bazar*, slaughter-house or place set apart as aforesaid, of such material, size and description, at such level, and with such outfall as to the Corporation may appear necessary, and

(*c*) to cause any shop, stall, shed or other structure in any such private market to be altered or improved in such manner as the Corporation may consider necessary.

Power to Corporation to define limits of market and to require provision and maintenance of market approaches, etc

**400.** (*1*) The Corporation may—

(*a*) define or determine the limits of any private market or *bazar*, or declare what portions of such market or *bazar* shall be made part of the existing approaches, roads, passages and ways to and in such market or *bazar*, and,

(*b*) after hearing the owner or occupier of such market or *bazar*, by written notice, require such owner or occupier to—

(*i*) lay out, construct, alter, clear, widen, pave, drain and light, to the satisfaction of the Corporation, such approaches, roads, passages and ways to and in such market or *bazar*,

*(Part V.—Chapter XXVII.—Markets, bazars and slaughter-places.—Section 401.)*

(*ii*) provide such conveniences for the use of persons resorting to such market or *bazar*, as the Corporation may think fit, and

(*iii*) provide adequate ventilation and lighting of the market building or any portion thereof, including shops and stalls, to the satisfaction of the Corporation.

(*2*) The Corporation, after hearing the owner or occupier of any private market or *bazar* may, by written notice, require such owner or occupier to maintain in proper order the approaches, roads, passages and ways to and in such market or *bazar*, and such other conveniences as are provided for the use of persons resorting thereto.

(*3*) The Corporation shall cause a notice of the limits of any market or *bazar*, defined under sub-section (*1*), to be affixed in the English, Bengali, Hindi and Urdu languages on some conspicuous spot on or near the building or place where such market or *bazar* is held

Power to Corporation to levy charges, farm rents, etc, in municipal markets, etc

**401.** The Corporation may—

(*a*) charge such stallages, rents and fees—

(*i*) for the occupation or use of any stall, shop, standing, shed or pen in a municipal market, municipal slaughter house or municipal stock-yard,

(*ii*) for the right to expose goods for sale in a municipal market,

(*iii*) for the use of machines, weights, scales and measures provided under clause (*b*) of sub-section (*1*) of section 392 for any municipal market, and

(*iv*) for the right to slaughter animals in any municipal slaughter-house, and for the feed of such animals before they are ready for slaughter,

as may from time to time be fixed by them in this behalf; or,

(*b*) farm the stallages, rents and fees leviable as aforesaid, or any portion thereof, for such period as they may think fit; or

(*c*) put up to public auction, or dispose of by private sale, the privilege of occupying or using any stall, shop, standing, shed or pen in a municipal market, municipal slaughter-house or municipal stock-yard, for such period and on such conditions as they may think fit

*(Part V.—Chapter XXVII.—Markets, bazars and slaughter-places.—Sections 402—401.)*

By-laws and table of charges to be posted up in markets and slaughter-houses.

**402.** (*1*) A printed copy of the by-laws made under section 478 and of the table of stallages, rents and fees, if any, in force in any market or slaughter-house under section 401, in the English, Bengali and Urdu languages, shall be affixed on some conspicuous spot in the market-building, market-place or slaughter-house.

(*2*) No person shall without lawful authority destroy, pull down, injure or deface any copy of any by-law or table so affixed.

Power to Corporation to expel person contravening by-laws

**403.** (*1*) The Corporation, after giving the parties concerned an opportunity of being heard, may—

(*a*) expel from any municipal market, municipal slaughter-house or municipal stock-yard, for such period as they may think fit, any person who or whose servant has been convicted of contravening any by-law made under section 478, at the time in force in such market, slaughter-house or stock-yard,

(*b*) prevent such person, by himself or his servants, from further carrying on any trade or business in such market, slaughter-house or stock-yard, or occupying any stall, shop, standing, shed, pen or other place therein, and

(*c*) determine any lease or tenure which such person may have in any such stall, shop, standing, shed, pen or place

(*2*) If the tenant, or the agent of the tenant, of the owner or lessee of any private market or slaughter-house has been convicted for contravening any by-law made under section 478 and specified by the Corporation in this behalf, the Corporation may require such tenant or agent to remove himself from such market or slaughter-house, within such time as may be mentioned in the requisition, and if he fails to comply with such requisition, he may, in addition to any penalty which may be imposed on him under this Act, be summarily removed from such premises by the owner or lessee thereof or by the servants of such owner or lessee

(*3*) If it appears to the Corporation that in any such case the owner or lessee is acting in collusion with a tenant or agent convicted as aforesaid who fails to comply with a requisition issued under sub section (*2*), the Corporation may, if they think fit, cancel the license of such owner or lessee in respect of such premises.

Depôts or shops for trading in food-stuffs, etc, in cases of emergency

**404.** Whenever an emergency arises which in the opinion of the Corporation makes it advisable to open depôts or shops for the purpose of trading in food-stuffs, fuel, cloth and other similar necessaries of life, they may, with the previous sanction of the Local Government and subject to such conditions and limitations as the Local Government may prescribe, open such depôts or shops for any such purpose.

(*Part V.*)

## CHAPTER XXVIII.

### FOOD AND DRUGS.

*Sale of food and drugs.*

Licensing of butchers and of sale of meat, etc., outside market

**405.** (*1*) No person shall, without or otherwise than in conformity with the terms of a license granted by the Corporation in this behalf,—

(*a*) carry on in Calcutta, or at any municipal slaughter-house without Calcutta, the trade or business of a butcher, or

(*b*) sell or expose or hawk about for sale any four-footed animal, or any meat or fish intended for human consumption, in any place other than a municipal market or a private market.

(*2*) Nothing in clause (*b*) of sub-section (*1*) shall apply—

(*a*) to the sale of meat or fish in any hotel or eating-house for consumption on the premises, or

(*b*) to fresh fish sold from, or exposed for sale on, a vessel in which it has been brought direct to Calcutta after being caught at sea or in the river or in private fisheries.

Prohibition of sale, etc., of adulterated or misbranded food or drugs

**406.** (*1*) No person shall directly or indirectly, himself or by any other person on his behalf, sell, expose or hawk about for sale, or manufacture or store for sale, any food or drug which is adulterated or misbranded :

Provided that an offence shall not be deemed to be committed under this section in the following cases, namely,—

(*a*) where any matter or ingredient not injurious to health has been added to any article of food or to any drug because the same is required for the production or preparation thereof, as an article of commerce in a state fit for carriage or consumption, and not fraudulently to increase the bulk, weight or measure of the article or to conceal the inferior quality thereof ; or

(*b*) where any article of food or any drug is unavoidably mixed with some extraneous matter in the process of collection or preparation ; or

(*c*) where a patent has been granted under any law for the time being in force in respect of any article of food, and the article is sold in the state required by the specification of the patent

*(Part V.—Chapter XXVIII.—Food and drugs.—Section 407.)*

(2) In any prosecution under this section it shall be no defence to allege that the vendor, manufacturer or storer was ignorant of the nature, substance or quality of the article sold, exposed, hawked about for sale, or manufactured or stored for sale, by him.

(3) In any prosecution under this section the Court shall, unless and until the contrary is proved, presume that any article of food or any drug found in the possession of a person who is in the habit of manufacturing or storing like articles has been manufactured or stored for sale by such person.

Prohibition of sale, etc, of certain articles which are not of the prescribed standard of purity

**407.** (1) No person shall directly or indirectly, himself or by any other person on his behalf, sell, expose or hawk about for sale, or manufacture or store for sale, any of the following articles, namely,—

(a) milk (other than condensed or desiccated milk in hermetically-closed receptacles),

(b) butter,

(c) *ghee*,

(d) wheat flour,

(e) mustard oil,

(f) tea,

(g) edible oil or fat, and

(h) any other article of food or any drug which may be notified by the Local Government in that behalf,

unless the following conditions are fulfilled, namely,—

(i) in the case of milk (other than condensed or desiccated milk in hermetically-closed receptacles)—

the animal from which the milk is derived shall be distinctly stated in such manner as the Corporation may, by general or special order, require, and the article sold, exposed or hawked about for sale, or stored for sale, as the case may be, shall be the natural secretion from the udder of such animal, from which no ingredient has been extracted and to which no water or other substance (including any preservative) has been added, and shall not contain a less proportion of non-fatty solids and of fat than such as the Local Government may prescribe;

(ii) in the case of butter—

it shall be exclusively derived from milk or cream (other than condensed or desiccated milk, or cream), or both, with or without salt or other preservative and with or without the addition of colouring matter, such preservative or colouring matter being of such a nature and in such quantity as not to render the article injurious to health, and shall fulfil such conditions as may be prescribed by the Local Government;

(*Part V.—Chapter XXVIII.—Food and drugs.—Section 407.*)

(*iii*) in the case of *ghee*—

it shall contain only substances, other than curds, which are derived exclusively from the milk of cows or of buffaloes, and shall fulfil such conditions as may be prescribed by the Local Government,

(*iv*) in the case of wheat flour—

it shall not contain any substance which is not derived exclusively from wheat;

(*v*) in the case of mustard oil—

it shall be derived exclusively from mustard seed,

(*vi*) in the case of tea, it shall be the leaves and leaf buds of species of *Thea*, prepared by fermenting, drying and firing; it shall not contain any tea which has been in any measure deprived of its proper quality, strength or virtue by steeping, infusion, decoction or other means, or any foreign matter;

(*vii*) in the case of edible oil or fat, it must always conform to the standard prescribed for the same, provided that if a declaration be made that it is not for human consumption, it is denatured in such a way that it can be easily detected by sight or smell, and

(*viii*) in the case of any food or drug notified by the Local Government under clause (*h*)—

it shall fulfil such conditions as may be prescribed by the Local Government in regard to such food or drug in such notification.

(*2*) No person shall directly or indirectly, himself or by any other person on his behalf, sell, expose or hawk about for sale, or manufacture or store for sale, anything which is similar to any of the articles specified in clauses (*a*), (*b*), (*c*), (*d*), (*e*), (*f*) and (*g*) of sub-section (*1*), or to any article notified by the Local Government under clause (*h*) of that sub-section under a name which in any way resembles the name of such article.

(*3*) In any prosecution under this section it shall be no defence to allege that the vendor, manufacturer or storer was ignorant of the nature, substance or quality of the article sold, exposed or hawked about for sale, or manufactured or stored for sale, by him.

(*4*) In any prosecution under this section the Court shall, unless and until the contrary is proved, presume that any of the articles specified in clauses (*a*), (*b*), (*c*), (*d*), (*e*), (*f*) and (*g*) of sub-section (*1*), or any article notified by the Local Government under

*(Part V.—Chapter XXVIII.—Food and drugs.—Sections 408—412.)*

clause (*h*) of that sub-section, found in the possession of a person who is in the habit of manufacturing or storing like articles, has been manufactured or stored for sale by such person.

Registration of manufactory.

**408.** (*1*) Every manufactory of mustard oil or other edible oils within Calcutta shall be registered by the owner or the person in charge thereof in the Corporation office in such manner as the Corporation may from time to time direct.

(*2*) Every owner or person in charge of a manufactory of mustard oil or other edible oils, and every wholesale dealer in such substances, shall keep a register in the form prescribed by the Corporation, showing the quantity and destination of each consignment of such substances sent out from his manufactory or place of business, and this register shall be open to inspection by any officer duly authorized by the Corporation in this behalf

Inspection of manufactories

**409.** Any officer duly authorized in this behalf by the Corporation shall have power to enter at all reasonable times any manufactories registered under section 408 and to inspect any process of manufacture or treatment used therein and to take samples for analysis of any mustard oil or other edible oils or of any article capable of being used in the manufacture, treatment or adulteration of any such article as aforesaid.

Prohibition of adulterants in places where butter, *ghee*, etc, are manufactured or stored

**410.** (*1*) No person shall keep or permit to be kept in any shop or place in which milk is stored or in any manufactory, shop or place, in which butter, *ghee*, wheat flour, mustard oil, tea, edible oil or fat, or any article notified by the Local Government under clause (*h*) of sub-section (*1*) of section 407 is manufactured or stored, any substance intended to be used for the adulteration of such milk, butter, *ghee*, wheat flour, mustard oil, or other article.

(*2*) If any article capable of being so used is found in any such manufactory, shop, or place, the Court shall, unless and until the contrary is proved, presume, in any prosecution under this section, that it is intended to be used for the purposes of adulteration

Receptacles for separated or skimmed condensed milk to be marked.

**411.** No person shall sell or expose or hawk about for sale any tin or other receptacle containing condensed milk which has been separated or skimmed, unless such tin or receptacle bears a label on which and on its wrapper (if any) it is clearly indicated, both in English and in Bengali, that the milk has been separated or skimmed and is not suitable for feeding infants under one year of age.

Prohibition of sale of diseased animals or unwholesome articles intended for human food.

**412.** (*1*) No person shall sell, store for sale, expose or hawk about for sale, or keep for sale, any animal intended for human consumption which is diseased, or any food or drug intended for human

consumption, or manufacture any such food or drug, which is unsound, unwholesome, or unfit for human food

(2) In any prosecution under this section the Court shall, unless and until the contrary is proved, presume that any animal, food, or drug found in the possession of a person who is in the habit of keeping animals of that class intended to be used for human consumption, or of keeping or manufacturing such food or drug for the purpose of human consumption, has been so kept or manufactured, as the case may be, for sale by such person.

Licensing of shops and places for retail sale of drugs.

**413.** (1) No person shall keep any shop or place for the retail sale of drugs, not being also articles of ordinary domestic consumption, without a license from the Corporation.

(2) The person to whom such license is granted in respect of any shop or place shall display it in some conspicuous part of such shop or place.

Power to Local Government to make rules as to compounders

**414.** The Local Government may make rules—

(a) prescribing an educational course for candidates for compounders' certificates,

(b) prescribing a fee to be paid by persons seeking admission to a Government medical school for the purpose of undergoing such educational course,

(c) regulating the public examination of candidates for compounders' certificates, and prescribing the fee to be paid and the conditions to be observed by persons seeking admission to any such examination,

(d) regulating the grant of compounders' certificates to persons passing any such examination,

(e) regulating the registration of certificates so granted,

(f) permitting any person having such qualifications as may be prescribed in this behalf in the rules to compound, mix, prepare, dispense or sell drugs without obtaining such a certificate, and

(g) authorizing the cancellation of any certificate granted, or the withdrawal of any permission given, under the said rules, to any person who is proved in the course of a judicial trial to have made a serious mistake, through ignorance or carelessness in the compounding, mixing, preparation, dispensing or selling of drugs.

Prohibition in respect of compounding of drugs.

**415.** (1) No person shall compound, mix, prepare, dispense, or sell any drug in any shop or place licensed under section 413, unless he has a certificate or permission granted under rules made under section 414 and then in force.

*(Part V.—Chapter XXVIII.—Food and drugs.—Sections 416—419.)*

(2) No owner, occupier or keeper of any shop or place licensed under section 413 shall employ in such shop or place any person contravening the provisions of sub-section (1):

Provided that this sub-section shall not apply to compounders or persons employed by practitioners of indigenous medicines.

(3) If any person contravenes the provisions of sub-section (2), the Magistrate by whom he is tried may cancel the license granted to him under section 413, sub-section (1).

Saving as to practitioners of indigenous medicines

**416.** Nothing in section 414 or section 415 shall apply to the sale of drugs used by practitioners of indigenous medicines when such drugs are not sold in a shop or place where medicines are dispensed upon prescription.

*Inspection, seizure and destruction of food and drugs*

Power to Health Officer to inspect place where unlawful slaughter of animals or sale of flesh is suspected

**417.** If the Health Officer, or any person authorized by him in this behalf, has reason to believe that any animal intended for human consumption is being slaughtered, or that the flesh of any such animal is being sold or exposed for sale, in any place or manner not duly authorized under this Act, he may, at any time by day or by night, without notice, inspect such place for the purpose of satisfying himself as to whether any provision of this Act or of any rule or by-law made under this Act, at the time in force, is being contravened thereat.

Corporation to provide for inspection of animals, etc, exposed for sale

**418.** (1) The Corporation shall make provision for the constant and vigilant inspection of all animals, food and drugs intended for human consumption which are in course of transit or are exposed or hawked about for sale or deposited in or brought to any place for the purpose of sale or of preparation for sale,

and shall also make similar provision for the inspection, during the process of manufacture, of any such food or drug.

(2) If, as a result of such inspection as is provided for in sub-section (1), a prosecution is instituted under this chapter, then the burden of proving that any such animal, food or drug was not exposed or hawked about or deposited or brought for sale or for preparation for sale, or was not intended for human consumption, shall rest with the party charged.

Power to Health Officer to seize animals, etc, which are diseased, etc

**419.** (1) The Health Officer, or any person authorized by him in this behalf, may, at any time by day or by night, inspect and examine any animal, food, or drug referred to in section 418 and any utensil or vessel used for preparing, manufacturing or containing any such food or drug.

(2) If any such animal appears to the Health Officer, or a person authorized as aforesaid, to be diseased, or if any such food or drug appears to him

*(Part V.—Chapter XXVIII.—Food and drugs.—Sections 420, 421.)*

to be unsound, unwholesome, or unfit for human food or for medicine, as the case may be, or to be adulterated, or if any such utensil or vessel is of such kind or in such state as to render any food or drug prepared, manufactured, or contained therein unwholesome or unfit for human food, or for medicine, as the case may be,

he may seize and carry away such animal, food, drug, utensil, or vessel, in order that the same may be dealt with as hereinafter in this chapter provided.

*Explanation*—(*1*) Meat subjected to the process of blowing shall be deemed to be unfit for human food

(*2*) A vessel made of any corrosive metal or material, notified in this behalf by the Local Government as dangerous to health, which is used for the preparation of liquid tea for sale shall be deemed to be of the kind referred to in this sub-section

(*3*) The Health Officer, or a person authorized as aforesaid, may, instead of carrying away any animal, food, drug, utensil, or vessel seized under sub-section (*2*), leave the same in such safe custody as he thinks fit in order that the same may be dealt with as hereinafter in this chapter provided; and no person shall remove such animal, food, drug, utensil, or vessel from such custody or interfere or tamper with the same in any way while so detained.

Destruction of animals, etc., seized under section 419

**420.** (*1*) When any animal, food, drug, utensil, or vessel is seized under section 419, it may, with the consent of the owner or the person in whose possession it was found, be forthwith destroyed; or

if such consent be not obtained, then, if any food or drug so seized is of a perishable nature, and is, in the opinion of the Executive Officer, the Health Officer, an Assistant or District Health Officer or any Councillor or Alderman, unsound, unwholesome or unfit for human food or medicine, it may likewise be destroyed.

(*2*) The expenses incurred in taking any action under sub-section (*1*) shall be paid by the person in whose possession such animal, food, drug, utensil, or vessel was at the time of its seizure.

Taking before Magistrate animals, etc., seized under section 419

**421.** (*1*) Any animal, food, drug, utensil, or vessel seized under section 419 which is not destroyed in pursuance of section 420 shall, subject to the provisions of section 419, sub-section (*3*), be taken before a Magistrate as soon as may be after such seizure.

(*2*) If it appears to the Magistrate that any such animal is diseased, or that any such food or drug is unsound, unwholesome, or unfit for human food, or for medicine, as the case may be, or is adulterated, or that any such utensil or vessel is of such kind or in such state as is mentioned in section 419, sub-section (*2*), or is used for preparing, manufacturing or containing such food or drug, he shall cause the same to be destroyed, at the expense of the person in whose possession it was at the time of its seizure or to be otherwise disposed of by the Corporation so as not to be capable of being used as human food or medicine.

*(Part V.—Chapter XXVIII.—Food and drugs.—Sections 422—424.)*

(3) If it appears to the Magistrate that any such animal is not diseased or that any such food or drug is not unsound, unwholesome, or unfit for human food, or for medicine, as the case may be, or is not adulterated, or that any such utensil or vessel is not used for preparing, manufacturing, or containing the same, the person from whose shop or place the animal, food, drug, utensil, or vessel was taken shall be entitled to have it restored to him, and it shall be in the discretion of the Magistrate to award him such compensation, not exceeding the actual loss which he has sustained, as the Magistrate may think proper.

*Analysis of food and drugs*

Power to Local Government to declare normal constituents of any article of food or drug

**422.** The Local Government may declare the normal constituents of any article of food or any drug and may determine, by rules in this behalf, what deficiency in any of these constituents or what addition of extraneous matter or proportion of water in a sample of any article of food or drug, shall, for the purposes of this Act, raise a presumption until the contrary is proved that the article of food or drug is not genuine or is injurious to health; and a public analyst shall have regard to such rules in certifying the result of an analysis under this Act.

Power of purchaser to have article of food or drug analysed

**423.** Any purchaser of an article of food or drug shall be entitled, on payment of such fee as the Corporation may prescribe, to have such article analysed by a public analyst and to receive from him a certificate in the form prescribed in Schedule XX to this Act, of the result of his analysis.

Compulsory sale to Health Officer for purpose of analysis

**424.** (1) If the Health Officer, or any person authorized by him in this behalf, requires the sale to him of any food or drug exposed or intended for sale, and tenders the price for a quantity not more than is reasonably requisite for division and disposal under sub-sections (1) and (5), any person in possession of or exposing the same for sale shall be bound to sell such quantity.

(2) The Health Officer, or any person authorized by him in this behalf, may require, on tendering the price for it, the sale to him during the process of manufacture, of any quantity of—

(i) any food, or

(ii) any drug, or

(iii) any ingredients used in the manufacture of any food or drug,

not being more than is reasonably requisite for division and disposal under sub-section (4) and sub-section (5), and any person in possession of the said food, drug or ingredients shall be bound to sell such quantity.

(3) The Health Officer, or any person authorized by him in this behalf, may likewise require the surrender to himself, for the purpose of analysis, of such quantity as is reasonably requisite for such process,

*(Part V.—Chapter XXVIII.—Food and drugs.—Sections 425, 426.)*

of any food which is in course of transit in Calcutta or stored in any place in Calcutta for sale as an article for human consumption, and any person in possession of the same shall be bound to surrender such quantity;

and in every such case the price of the food so surrendered shall be payable by the Health Officer or by the person authorized by him, to the owner of the same, if claimed by such owner within one month from the date of the said surrender.

(*4*) When any sale under sub-section (*1*) or sub-section (*2*) is completed, or when any food is surrendered under sub-section (*3*), the Health Officer, or the person authorized by him in this behalf, or any purchaser who wishes to have an article of food analysed under section 423 shall forthwith notify to the seller, or his agent selling the article or the person in possession thereof, as the case may be, his intention to have the same analysed, and shall divide the article into three parts, to be then and there separated, and each part to be marked and sealed or fastened up in any manner which its nature will permit.

(*5*) The Health Officer, or the person authorized by him in this behalf, or the purchaser referred to in sub-section (*4*) shall deliver one of the said parts to the seller or his agent, shall retain another for future comparison, and may send the third to a public analyst.

Duty of public analyst to supply certificate of analysis

**425.** (*1*) Every public analyst to whom any article of food has been submitted for analysis under this Act shall deliver to the person so submitting it a certificate in the form prescribed in Schedule XX to this Act, specifying the result of his analysis, and shall send a copy of the same to the Health Officer.

(*2*) Any document purporting to be such certificate signed by a public analyst shall be sufficient evidence in any inquiry, trial or proceeding under this Act of the result of such analysis:

Provided that any Court before which a case may be pending under this Act, whether exercising original, appellate, or revisional jurisdiction, may, of its own motion, or at the request either of the accused or the complainant, cause any article of food to be sent for analysis to the Director of Public Health, Bengal, or any other officer whom the Local Government may appoint in this behalf, who shall thereupon analyse the same and report the result of such analysis to the said Court, and the said report shall be admissible in evidence in such Court. The expense of such analysis shall be paid by the accused or the complainant, as the Court may, by order, direct.

*Vesting of condemned food or drug in Corporation.*

Food and drugs directed to be destroyed, etc., to be property of Corporation.

**426.** When any authority directs, in exercise of any powers conferred by this chapter, the destruction of any food or any drug, or the disposal of the same so as to prevent its being used as food or medicine, the same shall thereupon be deemed to be the property of the Corporation.

*(Part V.)*

## CHAPTER XXIX.

### MILK-SUPPLY.

Special powers to the Corporation

**427.** In addition to the other powers and duties conferred or imposed on them by or under this Act or any other Act, for the time being in force, the Corporation, in their discretion, may—

(*i*) establish, furnish, and maintain municipal dairies, grazing grounds, cattle-sheds and cow-houses either within or without Calcutta;

(*ii*) subject to such terms and conditions as the Corporation may think fit to impose, subsidize by such means as they may consider proper or guarantee the payment from the funds at their disposal of such sums as they may think fit, by way of interest on the capital expended, on the establishment, extension, maintenance, equipment or furnishing of privately owned grazing grounds or private dairies either within or without Calcutta;

(*iii*) provide or assist in the provision of, facilities for and in connection with, the transport of milk and other dairy produce to Calcutta from any municipal or private dairy;

(*iv*) purchase, maintain, or dispose of stud-bulls and take such other measures as may appear to the Corporation to be desirable with a view to improving the local breed of cattle; and

(*v*) establish, furnish, and maintain depôts or stores for the sale of milk and other dairy produce from municipal and other dairies.

Licensing of dairyman

**428.** (*1*) No person shall, without or otherwise than in conformity with the terms of a license granted by the Corporation in that behalf,—

(*a*) carry on in Calcutta the trade or business of a dairyman; or

(*b*) use any place in Calcutta for the sale of milk.

(*2*) Nothing in sub-section (*1*) shall apply to the sale of milk in any hotel or eating-house for consumption on the premises.

Corporation to be satisfied as to the sanitary condition of dairies before granting license under section 428

**429.** No person shall be licensed under section 428, sub-section (*1*), unless the Corporation, after due inquiry, are satisfied that the milk is obtained by him from a dairy, whether within or without Calcutta, in which the provisions for the ventilation including air-space, and the cleansing, drainage and water-supply are such as in the opinion of the Corporation are necessary or proper—

(*a*) for the health and good condition of the milch-cattle therein,

(*b*) for the cleanliness of milk vessels used therein for containing milk for sale, and

(*c*) for the protection of the milk against infection or contamination.

*(Part V.—Chapter XXIX.—Milk-supply.—Sections 430—432.)*

Power to require dairymen to furnish list of sources of supply

**430.** If the Health Officer has reason to believe that any person in Calcutta is suffering or is likely to suffer from a dangerous disease attributable to milk supplied in Calcutta from any dairy situated within or without Calcutta, or that the consumption of milk from such place is likely to cause any person in Calcutta to suffer from a dangerous disease, the Health Officer may require the person supplying the milk to furnish, within a reasonable time to be fixed by the Health Officer, a complete list of all dairies from which that person's supply of milk is derived or has been derived during the last six weeks, and, if the supply or any part of it is obtained through any other person, may make a similar requisition upon him, and every person on whom any such requisition is made shall comply therewith.

Inspection of dairies and prohibition of milk-supply

**431.** (*1*) The Health Officer may inspect, with a qualified Veterinary Surgeon, any dairy referred to in section 430, and the milch-cattle therein, and if, on such inspection, the Health Officer is of opinion that the dangerous disease is caused or is likely to be caused from consumption of the milk supplied therefrom, he may make an order prohibiting the supply of any milk for human consumption from such dairy.

(*2*) An order made by the Health Officer under sub-section (*1*) shall be forthwith withdrawn on his being satisfied that the milk-supply has been changed or that the cause of infection has been removed.

(*3*) When an order is made under sub-section (*1*) or is withdrawn under sub-section (*2*) in respect of a dairy situated outside Calcutta, the Health Officer shall also inform the local authority within whose jurisdiction the dairy is situated.

(*4*) When an order is made under sub-section (*1*), the Health Officer may direct such milk to be boiled and permit it to be sold or used under such reasonable restrictions as he may prescribe in this behalf for food of animals, or he may cause the milk to be destroyed.

(*5*) No person shall sell or supply any milk in contravention of the provisions of this section.

(*6*) No dairyman shall be liable to an action for breach of contract if the breach be due to an order passed under this section.

Power to seize and send milch-cattle to veterinary hospital for treatment

**432.** (*1*) If, on an inspection referred to in section 431, sub-section (*1*), the Health Officer is of opinion that any milch-cattle in such dairy are suffering from a disease which is likely to cause any person consuming the milk to suffer from a dangerous disease, he may cause any such animal to be seized and may send it to a veterinary hospital for treatment.

(*2*) When any such animal has been sent to a veterinary hospital under sub-section (*1*), it shall be detained there until, in the opinion of the officer in charge of the hospital, it is cured

*(Part V.—Chapter XXIX.—Milk-supply.—Sections 433, 434.)*

(3) The cost of the treatment, feeding and watering of the animal in the hospital may be realized from the owner of the animal according to such scale of rates as the Corporation may, from time to time, prescribe.

(4) If the owner refuses or neglects to pay such cost or to remove the animal within such time as the officer in charge of the hospital may prescribe, that officer may direct the animal to be sold and the proceeds of the sale to be applied to the payment of such cost.

(5) The surplus, if any, of the sale-proceeds shall be held in deposit by the Corporation, and shall, on application to be made by the owner within six months after the date of sale, be paid to him

Licensees to notify infectious diseases existing among persons engaged in dairies

**433.** Every person licensed under section 428, sub-section (1), shall notify to the Health Officer all cases of dangerous disease among persons engaged in, or in connection with the dairy, whether within or without Calcutta, from which he obtains his supply of milk for sale in Calcutta, as soon as he becomes aware or has reason to suspect that such dangerous disease exists

Application of section 507 to an entry to inspect dairy

**434.** The provisions of section 507 shall be applicable to an entry to inspect a dairy, whether within or without Calcutta, from which any milk is obtained for sale in Calcutta, for the purposes of this Act.

(*Part V.*)

## CHAPTER XXX.

### RESTRAINT OF INFECTION.

Medical practitioners to give information of existence of dangerous disease

**435.** Every medical practitioner who, in the course of his practice, becomes cognizant of the existence of any dangerous disease in any private or public dwelling-house, other than a public hospital, shall give information of the same with the least practicable delay to the Health Officer in such form and with such details as the Health Officer may, from time to time, require.

Power to Health Officer to inspect places and take measures to prevent spread of dangerous disease

**436.** The Health Officer, or any other municipal officer authorized by him in this behalf, may, at any time by day or by night, without notice, or after giving such notice of his intention as may, in the circumstances, appear to him to be reasonable, inspect any place in which any dangerous disease is reputed or suspected to exist, and take such measures as he may think fit to prevent the spread of the said disease beyond such place.

Prohibition of use, for drinking or for other domestic purpose, of water likely to cause dangerous disease

**437.** (*1*) If it appears to the Health Officer that the water in any well, tank or other place is likely, if used for the purpose of drinking or for any other domestic purpose, to engender or cause the spread of any dangerous disease, he may, by public notice, prohibit the removal or use of the said water for such purpose.

(*2*) No person shall remove or use for such purpose any water in respect of which any such public notice has been issued.

Power to Health Officer to remove patient to hospital in certain cases

**438.** (*1*) When, in the opinion of the Health Officer, any person is suffering from a dangerous disease and is also without proper lodging or accommodation or is lodged in such a manner that he cannot be effectually isolated so as to prevent the spread of infection, and the said officer considers that such person should be removed to a hospital or place at which patients suffering from such disease are received for medical treatment, he may, with the approval of the Executive Officer, direct or cause the removal of such person to such hospital or place:

Provided that all costs incurred for the removal and in the treatment of any such patient may be borne by the Corporation:

Provided also that, if any such person is a female, she shall not be removed to any such hospital or place unless the same has accommodation for females, of a suitable kind, and set apart from the portion assigned to males.

(*2*) The person (if any) who has charge of a person in respect of whom an order is made under sub-section (*1*) shall obey such order.

(*3*) If any female who, according to the custom of the country, does not appear in public, be removed to any hospital or place under sub-section (*1*)—

(*a*) the removal shall be effected in such a way as to preserve her privacy;

(*b*) special accommodation suited to such custom shall be provided for her in such hospital or place;

*(Part V.—Chapter XXX.—Restraint of infection.—Sections 439—441.)*

(*c*) she shall be treated therein by female agency only; and

(*d*) her female relatives shall be allowed to remain with her.

Power to Health Officer to disinfect building, tank, pool or well

**439.** (*1*) If the Health Officer, or any municipal officer authorized by him in this behalf, is of opinion that the cleansing or disinfecting of any building or any part of a building, or of any article therein which is likely to retain infection, or of any tank, pool or well adjacent to a building, would tend to prevent or check the spread of any dangerous disease, he may cleanse or disinfect such building, part, article, tank, pool or well and may, by written notice, require the occupier of such building or any part thereof to vacate the same for such time as may be prescribed in such notice.

(*2*) The cost of cleansing or disinfecting any building or part thereof, or any article therein, under sub-section (*1*), shall be paid by the occupier of such building and the cost of cleansing or disinfecting any tank, pool or well, under the said sub-section, shall be paid by the person in actual possession of such tank, pool or well, or if there be no such person, by the owner thereof:

Provided that if, in the opinion of the Corporation, the owner or occupier is from poverty unable to pay the said cost, the Corporation may direct payment thereof to be made from the Municipal Fund

Power to Health Officer to destroy huts and sheds

**440.** (*1*) If the Health Officer is of opinion that the destruction of any hut or shed is necessary to prevent the spread of any dangerous disease, he may, after giving to the owner or occupier of such hut or shed such previous notice of his intention as may in the circumstances of the case appear to him reasonable, take measures for having such hut or shed and all the materials thereof destroyed.

(*2*) Compensation not exceeding the value of the hut shall be paid by the Corporation to any person who sustains loss by the destruction of any such hut or shed; but, except as so allowed by the Corporation, no claim for compensation shall lie for any loss or damage caused by any exercise of the power conferred by sub-section (*1*).

Infected building not to be let without being first disinfected

**441.** No person shall let a building or any part of a building in which he knows or has reason to know that a person has been suffering from a dangerous disease,—

(*a*) unless the Health Officer has disinfected the same and has granted a certificate to that effect, and

(*b*) until a date specified in such certificate as that on which the building or part may be occupied without causing risk of infection.

*Explanation.*—For the purposes of this section the keeper of an hotel or inn shall be deemed to let part of his building to any person accommodated therein.

*(Part V.—Chapter XXX.—Restraint of infection.—Sections 442—444.)*

Provision of places for disinfection, washing or destruction of infected articles, and power to Health Officer to disinfect or destroy such articles

**442.** (*1*) The Corporation may provide a place or places, with all necessary apparatus and establishment, for the disinfection of conveyances, clothing, bedding or other articles which have become infected; and when any articles have been brought to any such place for disinfection, may cause them to be disinfected either,—

(*a*) free of charge; or,

(*b*) in their discretion, on payment of such fees as they may from time to time fix in this behalf.

(*2*) The Corporation may from time to time, by public notice, appoint a place or places at which conveyances, clothing, bedding or other articles which have been exposed to infection from any dangerous disease may be washed; and no person shall wash any such article at any place not so appointed, without having previously disinfected the same.

(*3*) The Health Officer, or any person authorized by him in this behalf, may disinfect or destroy, or, by written notice, direct the disinfection or destruction of any clothing, bedding or other articles likely to retain infection.

(*4*) The Corporation shall pay such compensation as may appear to them reasonable for any article destroyed under sub-section (*3*), and their decision shall be final.

Infected articles not to be transmitted, etc., without previous disinfection

**443.** (*1*) No person shall, without previous disinfection of the same, give, lend, sell, transmit, or otherwise dispose of any article which he knows or has reason to know has been exposed to infection from any dangerous disease.

(*2*) Nothing in sub-section (*1*) shall apply to a person who transmits, with proper precautions, any such article for the purpose of having the same disinfected.

Restrictions on carriage of patient or dead-body in public conveyance

**444.** (*1*) No person who is suffering from a dangerous disease shall enter, or cause or permit himself to be carried in, a public conveyance, nor shall any other person knowingly cause or permit a person in his charge and suffering from a dangerous disease or the dead-body of any person who has died from such disease to be carried in a public conveyance without—

(*a*) previously notifying to the owner, driver, or person in charge of such conveyance that he is so suffering, and

(*b*) taking proper precautions against spreading such disease.

(*2*) Notwithstanding anything contained in any enactment relating to public conveyances for the time being in force, no owner or driver or person in charge of a public conveyance shall be bound to carry any person suffering as aforesaid or any

*(Part V.—Chapter XXX.—Restraint of infection.—Sections 445—447.)*

such dead-body in such conveyance, unless payment or tender of sufficient compensation for the loss and expenses he must incur in disinfecting such conveyance is first of all made to him.

(*3*) No owner, driver or person in charge of a public conveyance shall knowingly carry or permit to be carried in such conveyance any person suffering as aforesaid or any such dead-body in contravention of sub-section (*1*).

Disinfection of public conveyance after carriage of patient or dead-body.

**445.** (*1*) The owner, driver or person in charge of any public conveyance in which any person suffering from a dangerous disease or the dead-body of any person who has died from such disease has been carried shall immediately take the conveyance for disinfection to a place appointed under section 442, sub-section (*1*).

(*2*) The person in charge of such place shall forthwith intimate to the Health Officer the number of the conveyance and proceed to disinfect the conveyance.

(*3*) No such conveyance shall be used until the Health Officer has granted a certificate stating that it may be used without causing risk of infection

Power to Corporation to provide special conveyances for patient or dead-body

**446.** (*1*) The Corporation may provide and maintain suitable conveyances for the free carriage of persons suffering from any dangerous disease or of the dead-bodies of persons who have died from any such disease.

(*2*) When such conveyances have been provided, it shall not be lawful, without the sanction of the Health Officer, to carry any such person or dead-body in, or for any such person to cause himself to be carried in, any other public conveyance.

Power to Corporation to take special measures on outbreak of dangerous disease or infectious epizootic disease.

**447.** In the event of Calcutta being at any time visited or threatened with an outbreak of any dangerous disease, or in the event of any infectious epizootic disease breaking out or being likely to be introduced into Calcutta, the Corporation, if they consider that the other provisions of this Act or the provisions of any other enactment for the time being in force are insufficient for the purpose, may, with the sanction of the Local Government,—

(*a*) take such special measures, and,

(*b*) by public notice, prescribe such temporary rules to be observed by the public or by any person or class of persons,

as they may deem necessary to prevent the outbreak of such diseases or the spread thereof.

(*Part V.*)

## CHAPTER XXXI.

### REGISTRATION OF BIRTHS AND DEATHS AND DISPOSAL OF THE DEAD.

*Registration of births and deaths.*

Appointment of registrars and sub-registrars, and list of same

**448.** (*1*) The Health Officer shall be chief registrar of Calcutta and shall keep, in such form as may from time to time be prescribed by the Local Government, a register of all births and deaths occurring in Calcutta.

(*2*) The Corporation shall, for the purposes of this chapter, divide Calcutta into such and so many districts as they may think fit, and shall appoint a person to be registrar of births and deaths for each such district.

(*3*) On the occurrence of any dangerous disease, the Corporation may appoint as many additional registrars as they may think necessary.

(*4*) The Corporation shall appoint a sub-registrar for each registered burial or burning ground or other place for the disposal of the dead, to register all corpses brought thereto for interment or cremation or for disposal otherwise:

Provided that it shall be competent to the Corporation to appoint the same sub-registrar for more than one such burial or burning ground or other place.

(*5*) The Corporation shall cause to be printed and published a list containing the name and address of every registrar and sub-registrar appointed under this section.

Register-books

**449.** The Corporation shall cause to be prepared and printed a sufficient number of register-books in such form as may from time to time be prescribed by them, for making entries of all births and deaths occurring in Calcutta.

Registrar to inform himself of, and register, births and deaths

**450.** A registrar shall inform himself of every birth and death occurring in his district, and shall ascertain and register, as soon as conveniently may be after the event, and without fee or reward, the particulars prescribed in Schedule XXI or Schedule XXII, as the case may be, in respect of every birth or death which has not been already registered.

Information of birth by whom to be given

**451.** It shall be the duty of the father or mother of every child born in Calcutta and, in default of the father or mother, of any relation of the child living in the same premises, and in default of such relation, of the person having charge of the child, to give, to the best of his knowledge and belief, to the registrar of the district within eight days after such birth, information of the several particulars prescribed in Schedule XXI:

Provided that if any one of the persons hereinbefore referred to gives the said information, no other person shall be bound to give it:

Provided also that, in the case of an illegitimate child, no person shall, as father of such child, be

*(Part V.—Chapter XXXI.—Registration of births and deaths and disposal of the dead.—Sections 452—455.)*

required to give information under this Act concerning the birth of such child, and the registrar shall not enter in the register the name of any person as father of such child, unless at the joint request of the mother and of the person acknowledging himself to be the father of such child, and such person shall in such case sign the register together with the mother.

Information of death by whom to be given

**452.** It shall be the duty of the nearest relatives present at the time of the death or in attendance during the last illness of any person dying in Calcutta, and in default of such relatives, of each person present or in attendance at the time of the death, and of the occupier of the premises in which, to his knowledge, the death took place, and in default of the persons hereinbefore in this section mentioned, of each inmate of such premises, and of the undertaker or other person causing the corpse of the deceased person to be disposed of, to give, to the best of his knowledge and belief, to the registrar of the district, or to the sub-registrar of the burial or burning ground or other place for the disposal of the dead where the body is buried or burnt or otherwise disposed of, information of the several particulars prescribed in Schedule XXII:

Provided that if any of the persons hereinbefore referred to gives the said information, no other person shall be bound to give it.

Provided also that if the death occurs in a hospital, none of the said persons shall be bound to give such information, but it shall be the duty of the medical officer in charge of the hospital, within twelve hours after the death, to send to the Health Officer a written notice containing the several particulars prescribed in Schedule XXII.

Medical practitioners to send to Health Officer notice stating cause of death

**453.** Any medical practitioner in attendance during the last illness of any person dying in Calcutta shall, within three days of his becoming cognizant in the course of such attendance of the death of such person, send a written notice to the Health Officer, as nearly as may be in the form prescribed in Schedule XXII, stating, to the best of his judgment, the cause of death.

Duties of police with regard to unclaimed corpses.

**454.** It shall be the duty of the police to convey every unclaimed corpse to a burial or burning ground or other place for the disposal of the dead, or to a duly appointed mortuary, and thereafter to inform the registrar of the district in which such corpse was found.

Sextons, etc., not to bury, etc., corpse without certificate

**455.** A sexton or keeper of a burial or burning ground or other place for the disposal of the dead, whether situated in Calcutta or not, shall not bury, burn or otherwise dispose of, or allow to be buried or burnt or otherwise disposed of, the corpse of any person who has died in Calcutta unless such corpse is accompanied by a certificate, in the form prescribed by Schedule XXII, signed by a registrar or sub-registrar appointed under section 448 or by a registered medical practitioner or any other medical practitioner authorized in this behalf by the Local Government:

*(Part V.—Chapter XXXI.—Registration of births and deaths and disposal of the dead.—Sections 456—459.)*

Provided that, at any burial or burning ground or other place for the disposal of the dead where there is a sub-registrar approved in this behalf by the Corporation who keeps a register in the form prescribed by the said schedule, an entry in such register relating to the deceased shall be deemed sufficient.

Power to Local Government to make rules

**456.** The Local Government may make rules—

(*a*) prescribing the qualifications to be required in persons appointed to be registrars or sub-registrars under this chapter;

(*b*) generally, for the guidance of the Corporation, the Health Officer, registrars and sub-registrars in all matters connected with the carrying out of the provisions of this chapter.

*Disposal of the dead.*

Registration of places for disposal of the dead

**457.** (*1*) Every owner or keeper of a place, not vested in or owned by the Corporation or a Board appointed by the Local Government for the administration of such place, which is used for burying, burning or otherwise disposing of the dead shall cause the same to be registered in a register which shall be kept by the Corporation, and shall deposit in the municipal office at the time of registration a plan of the said place showing the extent and boundaries thereof and bearing the signature of a surveyor in token of its having been prepared by or under the supervision of such surveyor.

(*2*) All burial and burning grounds shall be classified by the Corporation in the said register as public or private.

Provision and registration of new places for disposal of the dead.

**458.** If the existing places for the disposal of the dead appear to the Corporation at any time to be insufficient, they shall—

(*a*) provide other fit and convenient places for the disposal of the dead, either in or without Calcutta,

(*b*) cause the same to be registered in the register kept under section 457, sub-section (*1*), and

(*c*) cause to be kept in the municipal office, at the time of registration of each place so provided, a plan thereof showing the extent and boundaries of the same.

Permission of the Corporation required for opening or re opening places for disposal of the dead

**459.** Except with the written permission of the Corporation—

(*a*) no place which has never previously been lawfully used as a place for the disposal of the dead and registered as such shall be opened by any person as such place, and

(*b*) no burial or burning ground or other place for the disposal of the dead which has fallen into disuse shall be again used as such.

*(Part V.—Chapter XXXI.—Registration of births and deaths and disposal of the dead.—Sections 460, 461.)*

Power to Local Government to direct the closing of any place for the disposal of the dead

**460.** (*1*) If, from information furnished by competent persons and after personal inspection, the Health Officer is at any time of opinion—

(*a*) that any place of public worship is, or is likely to become, injurious to health by reason of the state of the vaults or graves within the walls of, or underneath, such place or in any churchyard or burial ground adjacent thereto, or

(*b*) that any other place used for the disposal of the dead is in such a state as to be, or to be likely to become, injurious to health,

he may submit his said opinion, with the reasons therefor, to the Corporation, who shall forward the same, with their opinion, for the consideration of the Local Government.

(*2*) Upon receipt of such opinion, the Local Government, after such further inquiry (if any) as they deem fit to make, may, by notification published in the *Calcutta Gazette* and in local newspapers, direct that such place of public worship, churchyard, burial ground or other place for the disposal of the dead shall no longer be used for the disposal of the dead

(*3*) Every such notification shall be noted in the register kept under section 457, sub-section (*1*).

(*4*) On the expiration of two months from the date of any such notification, the place to which the same relates shall be closed for the disposal of the dead.

(*5*) A copy of the said notification, with a translation thereof in the Bengali, Hindi and Urdu languages, shall be affixed on a conspicuous spot on or near the place to which the notification relates, unless such place be a place of public worship.

Power to Local Government to direct re-opening of place closed under section 460 or other enactment.

**461.** (*1*) If, after personal inspection, the Health Officer is at any time of opinion that any place formerly used for the disposal of the dead which has been closed under section 460 or under any other enactment or authority has, by lapse of time, become no longer injurious to health and may, without risk of danger, be again used for the said purpose,

he may submit his said opinion, with the reasons therefor, to the Corporation, who shall forward the same, with their opinion, for the consideration of the Local Government.

(*2*) Upon receipt of such opinion, the Local Government, after such further inquiry (if any) as they deem fit to make, may, by notification published in the *Calcutta Gazette*, direct that such place be re-opened for the disposal of the dead.

(*3*) Every such notification shall be noted in the register kept under section 457, sub-section (*1*).

*(Part V.—Chapter XXXI.—Registration of births and deaths and disposal of the dead.—Section 462.)*

Prohibition of certain acts without the permission of the Executive Officer

**462.** (*1*) No person shall, without the written permission of the Executive Officer—

(*a*) make any vault, grave or interment within any wall, or underneath any passage, porch, portico, plinth or verandah, of any place of worship; or

(*b*) make any interment or otherwise dispose of any corpse in any place which is closed for the disposal of the dead under section 460; or

(*c*) build, dig or cause to be built or dug any grave or vault, or in any way dispose of, or suffer or permit to be disposed of, any corpse, at any place which is not registered in the register kept under section 457, sub-section (*1*); or

(*d*) exhume any body from any place for the disposal of the dead, except under the provisions of section 176 of the Code of Criminal Procedure, 1898, or of any other relevant enactment for the time being in force. V of 1898

(*2*) Such permission may be granted by the Executive Officer in special cases only and subject to such general or special orders as the Local Government may make in this behalf.

(*3*) An offence against clauses (*b*), (*c*) or (*d*) of sub-section (*1*) shall be deemed to be a cognizable offence within the meaning of sections 149, 150 and 151 of the said Code of Criminal Procedure, 1898.

(*Part V.*)

## CHAPTER XXXII.

### CENSUS.

Census when and how to be taken.

**463.** (*1*) At such time and in such manner as the Corporation, with the sanction of the Local Government, may from time to time direct, an enumeration shall be made of all persons then being in Calcutta.

(*2*) When any time is appointed under sub-section (*1*), the Local Government shall, at least one month before that time, publish a notification in the *Calcutta Gazette*, and in such local newspapers, English and vernacular, as they may think fit, announcing the said time and containing all other particulars of which they consider the residents should be informed.

Superintendence of enumeration

**464.** Any person specially appointed by the Corporation for the purpose (hereinafter called the Superintendent), shall, subject to the general control of the Corporation, superintend the making of every enumeration under this chapter, and shall cause to be prepared and issued, for the purposes of such enumeration, such forms and instructions as he may consider necessary and as may be sanctioned by the Local Government.

Expenses of enumeration

**465.** The expenses incurred in making any enumeration under this chapter shall be paid out of the Municipal Fund.

Appointment and duties of enumerators

**466.** (*1*) The Superintendent shall appoint a sufficient number of competent persons to act as enumerators for the purposes of this chapter.

(*2*) Every enumerator shall obey all written instructions issued to him by the Superintendent for the making of the enumeration, and shall, under the direction of the Superintendent, and on the day to be appointed by the Corporation in this behalf,—

(*a*) visit every building within the area to which he has been appointed;

(*b*) take an account in writing of the name, sex, age, caste (if any), nationality and occupation of every person abiding in such building on the night immediately preceding the said day; and

(*c*) take an account in writing of all occupied buildings, all buildings then being built and uninhabited, and all other uninhabited buildings:

Provided that no female shall be required to disclose her name or age.

Military, naval and police officers and certain other persons, if required, to act as enumerators

**467.** (*1*) The following persons, namely,—

(*a*) any military or naval officer in command of a body of military or naval men or of a vessel of war, or any police-officer,

(*b*) any master of a merchant vessel, or any officer of the Port Commissioners in charge of a despatch vessel or dredger,

*(Part V.—Chapter XXXII.—Census.—Section 467.)*

(*c*) any *serang* or *tindal*, or any person in charge of a vessel or boat,

(*d*) any person in charge of a lunatic asylum, hospital or prison, or of any public or private charitable or scholastic institution, and

(*e*) any keeper of an hotel or lodging-house,

shall, if required by the Superintendent, act as an enumerator for the purpose of taking an account in writing of the name, sex, age, caste (if any), nationality and occupation of every person under his command or charge, or abiding in any building in his possession, charge or control, on the night immediately preceding the day appointed under section 466, sub-section (*2*), and shall obey all instructions issued to him in writing by the Superintendent for the purposes of taking such account.

(*2*) If any person upon whom a requisition is made under sub-section (*1*) is unable to write, an enumerator appointed under section 466, sub-section (*1*), shall fill up any form supplied to such person under that sub-section.

## PART VI.

## CHAPTER XXXIII.

### ACQUISITION, DISPOSAL AND GENERAL IMPROVEMENT OF LAND AND BUILDINGS.

*Acquisition and disposal of land and buildings.*

Power to Corporation to acquire land and buildings for improvements

**468.** The Corporation may acquire any land and buildings, whether situated in Calcutta or not,—

(*i*) for the purpose of opening out any congested or unhealthy area or of otherwise improving any portion of Calcutta; or

(*ii*) for the purpose of erecting sanitary dwellings for the working and poorer classes.

Scheme for carrying out such improvements.

**469.** (*1*) When any land or building has been acquired under section 468 for the purpose of carrying out any work, the Corporation shall frame a scheme for carrying out such work either by themselves or by any co-operative building society or by any other person whom they may select to carry out the same.

(*2*) When any scheme is framed under sub-section (*1*) for the carrying out of work by any person other than the Corporation, the scheme shall embody the terms and conditions agreed upon between the Corporation and such person;

and such conditions shall be deemed to include a power to the Corporation to superintend and control the execution of the work.

(*3*) Every scheme framed under sub-section (*1*) shall be published in the *Calcutta Gazette* and in such other manner as the Corporation may think fit, together with a notice specifying a period within which objections will be received.

(*4*) The Corporation shall consider all objections received within the said period, and shall submit the documents to the Local Government with such recommendations as they may desire to make.

(*5*) The Local Government, after considering the said objections and recommendations (if any), may confirm the scheme, and before doing so may modify it, but not so as to extend its effect.

Power to Corporation to carry out improvements

**470.** When any scheme for the carrying out of work by the Corporation themselves has been confirmed by the Local Government under section 469, sub-section (*5*), the Corporation may proceed to carry out the work in accordance with the scheme.

Transfer of land and buildings to person for carrying out improvements.

**471.** (*1*) When any scheme for the carrying out of work by any person other than the Corporation has been confirmed by the Local Government under section 469, sub-section (*5*), the Corporation may sell, lease or otherwise transfer to such person the land and buildings which have been acquired under section 468, for the purpose and under the condition that he will carry out such work in accordance with the said scheme.

*(Part VI.—Chapter XXXIII.—Acquisition, disposal and general improvement of land and buildings.—Sections 472, 473.)*

(2) Every sale effected or lease granted by the Corporation under this section shall be deemed to include a covenant authorizing the Corporation to re-enter if the purchaser or the lessee—

(a) fails to carry out any work in accordance with the said scheme, or,

(b) after carrying out the work, uses the land or buildings leased to him, or any part thereof, or allows the same to be used, for any purpose which is inconsistent with the said scheme;

and such covenant shall be binding on all transferees from the original purchaser or lessee.

(3) Before possession of any land or building is given to any person by the Corporation in pursuance of any contract (other than a lease) made under this section, the Corporation shall take security from such person for the due carrying out and maintenance of work in accordance with the said scheme.

*Additional powers for acquisition, disposal, etc.*

Further powers to Corporation for acquiring and disposing of land or buildings

**472.** In addition to the powers expressly conferred by any other section of this Act for the acquisition and disposal of land or buildings, the Corporation may—

(i) acquire, or pay rent for, or take on lease under such conditions as they may think fit, any land and buildings, whether situated in Calcutta or not, which may, in their opinion, be needed for carrying out any of the purposes of this Act,

(ii) sell, lease or otherwise transfer, on such terms as they may think fit, any land or building vested in them, and

(iii) purchase any land or buildings outside Calcutta in execution of a decree made by a Court in their favour.

Procedure when Corporation lease or sell land acquired by them

**473.** Whenever the Corporation decide to lease or sell any land acquired by them under this Act from any person, they—

(a) shall give notice by advertisement in local newspapers; and

(b) shall offer a prior right to take on lease or purchase such land to any person or his heirs, executors or administrators, who formerly had any interest in such land, or who, in the opinion of the Corporation, has a superior claim to such land, or if it appears to the Corporation that no person has such a superior claim, the Corporation shall put up to auction the right to take on lease or purchase such land among all persons who, previous to its acquisition, had interests in any portion of such land greater than a lease for years having seven years to run:

*(Part VI.—Chapter XXXIII.—Acquisition, disposal and general improvement of land and buildings.—Sections 474, 475).*

Provided that the prior right referred to in clause (*b*) need not be offered or put up to auction, if the Corporation consider that to do so would be detrimental to the carrying out of the purposes of this Act:

Provided also that before putting up to auction the right to take a lease or purchase such land, the Corporation may fix a minimum reserve price, below which the said right shall not be sold

*Exemption.*

Exemption of places of public worship from acquisition

**474.** Nothing in this Act shall authorise the Corporation to acquire for the purposes of this chapter or of any other section of this Act any building which is intended solely for and is used solely as a place of public worship.

*General provisions.*

Application of Land Acquisition Act, 1894, with amendment

**475.** Any land or buildings which the Corporation are authorized by this Act to acquire may be acquired under the provisions of the Land Acquisition Act, 1894, and for that purpose the said Act shall be subject to the amendment that the market-value of any land or building to be acquired shall be deemed, for the purposes of clause *first* of sub-section (*1*) of section 23 of the said Land Acquisition Act, to be the market-value according to the disposition of such land or building at the date of publication of the declaration relating thereto under section 6 of the said Land Acquisition Act 1 of 1894

Provided as follows :—

(*i*) if, within a period of two years from the date of the publication of such declaration in respect of any land or building, the Collector has not made an award under section 26 of the said Land Acquisition Act with respect to such land or building, the owner of the land or building shall be entitled to receive compensation for the damage suffered by him in consequence of the delay ;

(*ii*) if it be shown that, before such declaration was published, the owner of the land or building had taken active steps and incurred expenditure to secure a more profitable disposition of the same, further compensation, based on his actual loss, may be paid to him ;

*(Part VI.—Chapter XXXIII.—Acquisition, disposal and general improvement of land and buildings.—Section 476.)*

(*iii*) if the market-value is specially high in consequence of the property being put to a use which is unlawful or contrary to public policy, that use shall be disregarded and the market-value shall be deemed to be the market-value of the land or building if put to ordinary uses;

(*iv*) if the market-value has been increased by means of any improvement made by the owner or his predecessor in interest within one year before the aforesaid declaration was published, such increase shall be disregarded, unless it be proved that the improvement was made *bonâ-fide* and not in contemplation of proceedings for the acquisition of the land or building being taken under the said Land Acquisition Act. 1 of 1894

Vesting in Corporation of land and buildings acquired under the Land Acquisition Act, 1894

**476.** On payment by the Corporation of the compensation awarded under the said Land Acquisition Act, 1894, in respect of any land or buildings and of any other charges incurred in acquiring the said land or buildings, the same shall vest in the Corporation.

(*Part VI.*)

## CHAPTER XXXIV.

### SPECIAL POWERS TO THE CORPORATION.

Special powers to the Corporation

**477.** In addition to the other powers and duties conferred or imposed on them by or under this Act or any other Act for the time being in force, the Corporation may, in their discretion, provide from time to time, either wholly or partly, for all or any of the following matters, namely :—

(*i*) the planting and preservation of trees in public streets and public places;

(*ii*) the construction, alteration, maintenance and adornment of public halls, offices and other buildings under the control of the Corporation or required for municipal purposes;

(*iii*) the laying out and maintenance of squares, gardens and playgrounds, and the supplying and maintenance of equipment for games in playgrounds;

(*iv*) the playing of music in squares, gardens or other public places,

(*v*) the survey of buildings and lands, and the preparation and maintenance from time to time of survey maps and plans and of the records relating thereto;

(*vi*) the construction and maintenance of hospitals, infirmaries, alms-houses, asylums, orphanages, industrial schools and auxiliary homes for the purposes of the Bengal Children Act, 1922, and of public training schools for nurses, either in Calcutta, or (if such institutions are for the benefit of persons residing in Calcutta) without Calcutta, and arrangements for keeping a sufficient staff in such institutions; Ben Act II of 1922.

(*vii*) the payment of contributions to the cost of such orphanages, industrial schools and auxiliary homes for the purposes of the Bengal Children Act, 1922, and of public training schools for nurses or institutions for providing nurses and of the staff of these institutions and the other institutions referred to in clause (*vi*);

(*viii*) the establishment, maintenance and administration of veterinary hospitals and dispensaries in Calcutta;

(*ix*) the payment of contributions to the cost of such veterinary hospitals and dispensaries;

(*x*) the payment of contributions towards any public fund raised for the relief of human suffering within Calcutta;

(*xi*) the payment of contributions to charitable institutions in Calcutta for assisting in the disposal of unclaimed corpses and the burial or cremation of paupers,

(*xii*) vaccination;

(*xiii*) the promotion of technical and industrial education;

(*xiv*) free libraries;

*(Part VI.—Chapter XXXIV.—Special powers to the Corporation.—Section 477.)*

(*xv*) the payment of, or the payment of a contribution to, the cost incurred on the occasion of any public ceremony or entertainment or any exhibition for the purpose of instruction or education, held in Calcutta;

(*xvi*) the payment of contributions to the Commissioners of any neighbouring municipality for expenditure on sanitary purposes;

(*xvii*) the presentation of addresses to persons of distinction; and

(*xviii*) any other matter likely to promote the public health, safety or convenience or the carrying out of this Act, which the Local Government, on the recommendation of the Corporation made in pursuance of a resolution in favour of which not less than two-thirds of the Councillors and Aldermen present and voting have voted, may declare in this behalf

## PART VII.

### CHAPTER XXXV

### BY-LAWS AND RULES.

Power to Corporation to make by-laws

**478.** The Corporation may make by-laws generally for carrying out the provisions and intentions of this Act; and in particular, and without prejudice to the generality of the foregoing power, they may make by-laws—

(*1*) for the subdivision, amalgamation, renewal and exchange of municipal debentures issued under Chapter VIII;

(*2*) regulating—

(*a*) the detention and examination of petroleum introduced into Calcutta for consumption therein;

(*b*) the collection of any tax imposed under section 181, sub-section (*3*); and

(*c*) such other matters connected with the introduction of petroleum into Calcutta for consumption therein as the Corporation may from time to time think fit to regulate:

Provided that no such by-law shall render petroleum, passing through Calcutta in transit for any place beyond Calcutta, liable to taxation or to any detention or examination whatsoever under this Act,

(*3*) prescribing the size, the make, the length of the nave, and the minimum width of tyres of carts, the maximum load which they shall be permitted to carry, and generally prescribing the conditions under which persons shall be permitted to own and drive registered carts;

(*4*) prescribing the procedure to be followed by owners or occupiers desiring a water-supply;

(*5*) prescribing a schedule of charges for water supplied for other than domestic purposes;

(*6*) regulating the testing of the purity of filtered water supplied under Chapter XVII;

(*7*) providing for the maintenance of a map of the water-supply system and facilitating the inspection of the same by ratepayers;

(*8*) regulating—

(*i*) the construction and maintenance of water-pipes, taps and fittings, and

(*ii*) all matters and things connected with the supply and use of water, the use, protection and control of meters, hydrants and other fittings, and generally the control of the water-supply and the administration of Chapter XVII;

*(Part VII.—Chapter XXXIV.—By-laws and rules.—Section 478.)*

(*9*) specifying the manner in which house-drains and privies are to be connected with the municipal drains;

(*10*) prescribing the procedure to be followed by owners and occupiers of premises in connecting house-drains and privies with the municipal drains;

(*11*) regulating the construction, maintenance, control and cleansing of drains, ventilation-shafts or pipes, cesspools, house-gullies, privies, urinals, public bathing and washing places and drainage works of every description, whether belonging to the Corporation or not;

(*12*) providing for the maintenance of a map of the sewerage system, and facilitating the inspection of the same by ratepayers;

(*13*) prescribing the qualifications to be required from, and regulating the appointment, suspension, and dismissal of, licensed plumbers;

(*14*) for the alteration of doors, gates, bars and windows opening outwards on a public street,

(*15*) for the provision, maintenance, and lighting of hoardings or fences in public streets when building or any other work is carried on;

(*16*) regulating the making of holes or excavations of any kind in a public street;

(*17*) prohibiting or regulating the placing of obstructions, projections or encroachments, or the depositing of materials or goods, in a public street or in or over any drain or aqueduct in a public street or on any land vested in the Corporation;

(*18*) regulating the posting or painting of advertisements in or adjacent to or visible from public streets or other public places;

(*19*) for the provision and maintenance of gutters and pipes for carrying and discharging water from buildings in a public street;

(*20*) regulating the construction of approach roads crossing the footpath of a public street;

(*21*) regulating the construction of verandahs and other structures in streets;

(*22*) for altering the position of pipes and appliances laid in streets;

(*23*) regulating all matters relating to the fittings, width and construction of streets;

(*24*) regulating the use of land as sites for the erection of buildings;

(*25*) regulating the erection of new buildings;

(*26*) regulating the making of alterations in, and additions to, buildings;

*(Part VII.—Chapter XXXV.—By-laws and rules.—Section 478.)*

(*27*) regulating the erection and use of buildings for a temporary purpose;

(*28*) providing for the protection of lamps, lights, gas-pipes, electric wires and all other appurtenances necessary for the lighting of public streets and municipal markets and buildings; and regulating the manner in which gas-pipes or electric wires shall be laid and existing gas-pipes or electric wires altered in such streets;

(*29*) providing for and regulating the collection, removal and disposal of all offensive matter and sewage accumulating in Calcutta, and the efficient daily cleansing and scavenging of all streets and premises;

(*30*) for the regulation and control of public bathing and washing places and places constructed under section 377, the management, equipment and maintenance of public swimming-baths, the imposition of fees for the use of such baths and the control of persons resorting to such washing places and baths;

(*31*) for the construction, management and maintenance of public wash-houses, for the regulation and control of such public wash-houses and other places for the use of washermen in the exercise of their calling, for the imposition of fees for the use of such wash-houses or places, for the control of persons carrying on business therein or resorting thereto, and for the prohibition of the use of unauthorized places for such purposes;

(*32*) prohibiting the fouling of any tank, reservoir, stream, well or ditch in Calcutta or of any source from which the public water-supply is drawn;

(*33*) for preventing the straying of any animal and regulating the keeping, feeding and destruction of any animal, and the disposal of its carcass, and prescribing the fees payable to the Corporation for such disposal;

(*34*) specifying the manner in which stables, cattle-sheds and cow-houses are to be constructed, altered, paved, repaired, maintained and inspected, and the means whereby they are to be connected with the municipal drains;

(*35*) (*a*) providing for the inspection, keeping and removal of milch-cattle, and prescribing and regulating the ventilation, lighting, cleansing, drainage and water-supply of dairies

*(Part VII.—Chapter XXXV.—By-laws and rules.—Section 478.)*

and cattle-sheds in the occupation of persons following the trade of dairyman or milk-seller; and

(*b*) for declaring areas in which no person shall keep milch-cattle for the purpose of supplying milk for sale, subject to power being given to the Corporation to give such compensation as they think fit in respect of any cattle-shed constructed in accordance with the plan sanctioned by the Corporation within two years of the publication of a by-law under this sub-clause, provided that such structure is removed within the time fixed by the by-law;

(*36*) for enforcing the cleanliness of milk-stores and milk-shops and milk-vessels used for containing milk;

(*37*) requiring notice to be given whenever any milch-animal is affected with any contagious disease, and prescribing precautions to be taken for protecting milch-cattle and milk against infection or contamination;

(*38*) for the regulation of lodging-houses,

(*39*) regulating the removal and disposal of rank or noxious vegetation;

(*40*) for the inspection, supervision, regulation, and control of eating-houses and places where food for human consumption is prepared or kept for sale;

(*41*) for determining what amount of superficial and cubic space shall be deemed, for the purposes of sub-section (*1*) of section 384, to be necessary for each occupant of a building or room;

(*42*) for the regulation, inspection by day or by night, supervision and control of all factories, bakehouses, work-shops, work-places and premises used for any of the purposes referred to or mentioned in sections 385 and 386, and of all trades and manufactures carried on therein, and for the cleanliness or ventilation of the same, or the health or safety of the persons employed therein;

(*43*) regulating the inspection, supervision and control of theatres, circuses and other places of public resort, recreation or amusement, and prescribing the terms and conditions subject to which licenses may be granted for keeping open such places;

*(Part VII.—Chapter XXXV.—By-laws and rules.—Section 478.)*

(*44*) for securing the efficient inspection of markets, slaughter-houses and places set apart under proviso (*iii*) to sub-section (*1*) of section 396,

(*45*) regulating the management of, and the conduct of business in, markets,

(*46*) regulating the use of any municipal market, municipal slaughter-house, municipal stock-yard, or any part thereof, or any place set apart under proviso (*iii*) to sub-section (*1*) of section 396;

(*47*) providing for a sufficient supply of water to or in, and for the proper cleansing, general control and regulation of the sanitary condition of, markets, slaughter-houses, stock-yards and places set apart under proviso (*iii*) to sub-section (*1*) of section 396, and preventing the exercise of cruelty and the occurrence of nuisances or obstruction therein;

(*48*) for preventing persons suffering from any loathsome disease from keeping stalls in, or being employed in preparing or selling articles of food in, any market or from entering any market or touching any article brought thereto for sale, and for authorizing the expulsion of such persons from any market;

(*49*) for preventing persons suffering from any infectious or contagious disease living in places where food or drugs are sold, stored or prepared, and for disinfecting the place where any such case has occurred, and generally for the restraint of infection in such places;

(*50*) for preventing the use in any market of false or incorrect weights, scales or measures;

(*51*) for posting up a price-current in any market,

(*52*) for the control and supervision of butchers carrying on business in Calcutta or at any municipal slaughter-house without Calcutta;

(*53*) for securing the efficient inspection and sanitary regulation of shops in which articles of food or drugs are kept or sold and the provision therein of suitable receptacles or vessels for keeping such food or drugs and for enforcing the proper maintenance and cleanliness of such receptacles and vessels;

(*54*) prescribing the standard of water to be used in the manufacture or preparation of soda water, lemonade, lithia water or other artificially aerated water or other mineral water or cordials or sherbet or other similar beverages or ice-creams or ice;

(*Part VII.—Chapter XXXV.—By-laws and rules.—Section 478.*)

(*55*) prescribing the forms or kinds of label to be attached to articles of food or drugs, or a mixture thereof, or to packages containing the same, and requiring or prohibiting the use in the inscription on the label so attached of such particulars, directions, statements, information or words as are specified ;

(*56*) prescribing the forms or kinds of label to be attached to receptacles containing disinfectants, germicides, antiseptics or preservatives for sale, and requiring or prohibiting the inscriptions on the label so attached of such particulars, directions, statements, information or words as are specified ;

(*57*) requiring packages in which any article of food is sold to be marked as prescribed with the date on which it was packed ;

(*58*) prohibiting the publication, use or exhibition in any manner whatsoever of any printed or pictorial matter with respect to articles of food or drugs which is false or misleading or likely to mislead ;

(*59*) requiring the destruction or denaturation of any article of food that has become deteriorated or impoverished or which is injurious to health ;

(*60*) securing the wholesomeness, cleanliness, and freedom from contamination and adulteration of any article of food or drug hawked about for sale, and the cleanliness of receptacles used for the purpose ;

(*61*) prescribing and regulating the functions and duties of registrars and sub-registrars of births and deaths and of keepers of burial and burning grounds and other places for the disposal of the dead, and for regulating and ensuring the correct and prompt registration of all births and deaths ;

(*62*) regulating the speedy disposal of corpses,

(*63*) regulating the carrying of corpses along streets ;

(*64*) regulating the removal of corpses or parts of corpses which have been kept or used for purposes of dissection ;

(*65*) regulating the digging and making of graves and vaults ;

(*66*) regulating the re-opening of graves and vaults for purposes of fresh interments ;

(*67*) regulating cremation ;

*(Part VII.—Chapter XXXV.—By-laws and rules.—Sections 479—481)*

(*68*) generally, for regulating the disposal of the dead, the inspection of all places for the disposal of the dead, and the maintenance of all such places in good order and in a safe and sanitary condition,

(*69*) regulating and facilitating the taking of a census of the population of Calcutta, and securing accurate returns thereof, and prescribing the duties of the Superintendent referred to in section 461,

(*70*) for securing the registration of marriages for statistical purposes, and

(*71*) regulating the printing and sale of by-laws and rules made under this Act, and providing for the exhibition thereof in suitable places

Provisions as to the application of certain by-laws

**479.** (*1*) There shall be annexed to by-laws made under clauses (*9*), (*11*) or (*31*) of section 478, type-plans of all constructions referred to in them and the said plans shall be open to the inspection of any applicant at the municipal office, at all reasonable times.

(*2*) No by-law made under clause (*42*) of section 478 shall—

(*a*) affect the Bengal Steam-boilers and Prime-movers Act, 1879, or — Ben Act III of 1879

(*b*) apply to any factory to which the Indian Factories Act, 1911, is applicable — XII of 1911

Penalties for breach of by-laws

**480.** In making a by-law under section 478, the Corporation may provide that a breach of it shall be punishable—

(*a*) with fine which may extend to fifty rupees and in the case of a continuing breach, with fine which may extend to ten rupees for every day during which the breach continues after conviction for the first breach, or

(*b*) with fine which may extend to ten rupees for every day during which the breach continues after receipt of written notice from the Corporation to discontinue the breach.

Conditions precedent to the making of by-laws

**481.** The power to make by-laws under this Act is subject to the condition of the by-laws being made after previous publication, and to the following further conditions, namely,—

(*a*) a draft of the by-laws shall be published in the *Calcutta Gazette* and in local newspapers;

(*b*) such draft shall not be further proceeded with until after the expiration of a period of one month from such publication or such longer period as the Corporation may appoint;

*(Part VII.—Chapter XXXV.—By-laws and rules.—Sections 482—484.)*

(*c*) for not less than one month during such period, a printed copy of such draft shall be kept at the municipal office for public inspection, and every person shall be permitted at any reasonable time to peruse the same, free of charge; and

(*d*) printed copies of such draft shall be obtainable by any person requiring the same, on payment of such fee, not exceeding two annas for each copy, as may be prescribed by the Corporation.

By-laws to be subject to sanction of Local Government

**482.** (*1*) No by-law made by the Corporation under this Act shall have any validity unless and until it is sanctioned by the Local Government.

(*2*) Before sanctioning any such by-law, the Local Government may modify it

Power to Local Government to make rules for the amendment of certain schedules

**483.** (*1*) The Local Government may, on the recommendation of the Corporation, by rules alter, add to or cancel any part of, or any rule contained in, any schedule except Schedule I.

(*2*) Notwithstanding anything contained in sub-section (*1*) the Corporation in pursuance of a resolution passed at a meeting, may from time to time, subject to the approval of the Local Government, divide the Garden Reach constituency in Schedule III into two or more constituencies for the purposes of the election of Councillors and allocate to each such constituency such number of Councillors as to them may seem fit, but not so as to alter in respect of the area included in the Garden Reach Municipality before the commencement of this Act the total number of Councillors, or the number of seats as distributed between non-Muhammadan and Muhammadan Councillors, as fixed by Schedule III.

(*3*) The Corporation may also amend Schedule VII so as to give effect to the division referred to in sub-section (*2*).

(*4*) All references in this Act to any schedule which may be amended under this section shall be construed as references to such schedule as for the time being so amended.

Conditions precedent to the making of rules

**484.** (*1*) The power to make rules under any section (other than section 447) of this Act is subject to the condition of the rules being made after previous publication.

(*2*) The power of the Local Government to make rules under section 25, sub-section (*2*), section 30, sub-sections (*1*) and (*2*), section 422, or section 483, sub-section (*1*), is also subject to the following further conditions, namely,—

(*a*) a draft of the rules shall be published in the *Calcutta Gazette* and forwarded to the Corporation for their opinion;

*(Part VII.—Chapter XXXV.—By-laws and rules.—Sections 485—487.)*

(*b*) such draft shall not be further proceeded with until six weeks after such publication or until such later date as the Local Government may appoint.

Certain rules to be subject to sanction

**485.** (*1*) No rule made under section 56, section 71, sub-section (*9*), or section 75, sub-section (*4*), shall have any validity unless and until it is sanctioned by the Local Government.

(*2*) Before sanctioning any such rule, the Local Government may modify it.

Publication of by-laws and rules in Gazette, and effect of such publication

**486.** All by-laws and rules made and (where sanction is required) duly sanctioned under this Act shall be published in the *Calcutta Gazette*, and shall thereupon have effect as if enacted in this Act

Power to Local Government to cancel by-laws and rules

**487.** (*1*) If the Local Government are at any time of opinion that any by-law or rule made under this Act by the Corporation should be cancelled, either wholly or in part, they shall cause the reasons for such opinion to be communicated to the Corporation, and shall prescribe a reasonable period within which the Corporation may make any representation with regard thereto which they may think fit.

(*2*) After receipt and consideration of any such representation, or, if in the meantime no such representation is received, after the expiry of the prescribed period, the Local Government may at any time, by notification in the *Calcutta Gazette*, cancel such by-law or rule, either wholly or in part:

Provided that no by-law or rule shall be cancelled in part only if, within the period aforesaid, the Corporation have objected to a partial cancellation thereof

(*3*) The cancellation of a by-law or rule under sub-section (*2*) shall take effect from such date as the Local Government may in the said notification direct, or, if no such date is specified, then from the date of the publication of the said notification in the *Calcutta Gazette*, except as to anything done or suffered or omitted to be done before such date

(*4*) The said notification shall also be published in local newspapers.

## PART VIII.

## CHAPTER XXXVI

### PENALTIES.

Certain offences punishable with fine

**488.** (*1*) Whoever commits any offence by—

(*a*) contravening any provision of any of the sections, sub-sections, clauses of sections, provisos or rules of this Act mentioned in the first column of the following table, or

(*b*) contravening any provision of any rule made under any of the said sections, sub-sections, clauses, or provisos, or

(*c*) failing to comply with any direction lawfully given to him or any requisition lawfully made upon him under any of the said sections, sub-sections, clauses provisos or rules,

shall be punished with fine which may extend to the amount mentioned in that behalf in the third column of the said table

(*2*) Whoever, after having been convicted of any offence referred to in clauses (*a*), (*b*) or (*c*) of sub-section (*1*), continues to commit such offence shall be punished, for each day after the first during which he continues so to offend, with fine which may extend to the amount mentioned in this behalf in the fourth column of the said table.

*Explanation* — The entries in the second column of the following table, headed "Subject", are not intended as definitions of the offences described in the provisions mentioned in the first column, or even as abstracts of those provisions but are inserted merely as references to the subject thereof —

| 1 | 2 | 3 | 4 |
|---|---|---|---|
| Sections, sub-sections, clauses, provisos or rules | Subject | Fine which may be imposed. | Daily fine which may be imposed |
| Section 121, sub-section (*2*) | Requisition by auditors to produce documents, to appear in person, or to make and sign declaration, to answer question or to submit statement. | One hundred rupees. | Fifty rupees |
| Section 136, sub-sections (*1*) and (*2*) | Requisition for returns of measurements and rent or annual value of land or building | Two hundred rupees | |
| Section 145 ... | Obligation to give notice of transfer of title in land or building. | Twenty-five rupees | Five rupees |
| Section 155 ... | Obligation to give notice of re-occupation of unoccupied land or building. | Twenty-five rupees | Five rupees |
| Section 167, sub sections (*1*) and (*2*). | Obligation to forward statement of carriages and animals liable to taxation. | Twenty rupees | |

*(Part VIII.—Chapter XXXVI.—Penalties.—Section 488.)*

| 1 | 2 | 3 | 4 |
|---|---|---|---|
| Sections, sub-sections, clauses, provisos or rules | Subject | Fine which may be imposed | Daily fine which may be imposed |
| Section 168 ... | Requisition on occupier to forward statement of carriages and animals liable to taxation, and names and addresses of persons owning or keeping same | Twenty rupees | |
| Section 171 .. | Requisition on livery stable-keeper to produce books and accounts for inspection | Fifty rupees ... | Ten rupees |
| Section 173, sub-sections (*3*) and (*4*) | Obligation to forward list of dogs liable to taxation | Ten rupees | |
| Section 178 ... | Requisition on occupier to forward list of persons carrying on profession, trade or calling in his premises | Fifty rupees | Ten rupees |
| Section 181, sub-section (*2*) | Prohibition of introduction of petroleum into Calcutta for storage | One thousand rupees | |
| Section 183, sub-section (*3*) | Keeping or possessing cart not duly registered | Twice the amount payable for registration, exclusive of the amount so payable | |
| Section 183, sub-section (*4*) | Failing to affix registration number to cart | Five rupees | |
| Section 187, sub-section (*1*) | Driving cart without registration ticket | Twenty-five rupees | Five rupees. |
| Section 187, sub section (*3*) | Use of false registration ticket, or a ticket granted to another cartman | Twenty-five rupees | Five rupees |
| Section 220, sub-section (*2*) | Improper use of filtered water supplied for domestic purposes | Ten rupees .. | Five rupees. |
| Section 221, sub-section (*3*) | Use of unfiltered water for domestic purposes | Five rupees | |
| Section 228 ... | Requisition on owner to obtain adequate supply of water from nearest main for his building | Twenty-five rupees | Five rupees |
| Section 238, sub-section (*4*) | Failure to give notice of intention to occupy or vacate premises. | Thirty rupees. | |
| Section 243, sub-section (*2*) | Unauthorizedly taking water for use without Calcutta | Fifty rupees. | |
| Section 246 ... | Requisition to fill up well ... ... | Twenty-five rupees | Five rupees. |
| Section 253, sub-section (*1*) | Constructing private street, wall or other structure over municipal drain | One hundred rupees | Ten rupees |

(*Part VIII.—Chapter XXXVI.—Penalties.—Section 488.*)

| 1 | 2 | 3 | 4 |
|---|---|---|---|
| Sections, sub-sections, clauses, provisions or rules | Subject | Fine which may be imposed | Daily fine which may be imposed |
| Section 257, sub-section (*1*) | Unlawfully connecting house drain with municipal drain | One hundred rupees | Ten rupees |
| Section 258 .. | Requisition to connect one house-drain with another in private street | Twenty-five rupees | Five rupees |
| Section 260 ... | Requisition on owner of premises to make house-drain and provide appliances or fittings, or to remove house-drain, etc | Fifty rupees . | Five rupees |
| Section 261 ... | Requisition on owner of premises to make house drain communicating with nearest municipal drain or closed cess pool. | Fifty rupees .. | Five rupees |
| Section 262 ... | Direction to owner of premises as to closing or limiting the use of house-drain | Fifty rupees ... | Five rupees |
| Section 263, sub-section (*1*) | Requisition to construct house-drain | Fifty rupees ... | Five rupees |
| Section 264 | Requisition on owner of courtyard, alley or passage to pave, repair and raise level of same | Twenty five rupees | Five rupees. |
| Section 265, sub-section (*2*) | Requisition on owner of land to construct new drain for benefit of occupants of hut, and failure to maintain, etc, such drain. | Fifty rupees . | Five rupees |
| Section 266 ... | Construction maintenance and regulation of drains | One hundred rupees | Twenty rupees |
| Section 268, sub-section (*2*) | Keeping a public privy or urinal without license or suffering a licensed public privy or urinal to be in a filthy or noxious state | One hundred rupees | Fifty rupees. |
| Section 269 ... | Provision of privy and urinal accommodation for building | Fifty rupees | |
| Section 270, sub-section (*1*) | Provision of privy and urinal and bathing or washing place for new building for twenty labourers | Fifty rupees. | |
| Section 270, sub-section (*2*) | Requisition on owner of premises to provide privy, urinal and other accommodation for twenty labourers. | Fifty rupees | Five rupees |
| Section 271 .. | Requisition on owner of premises to provide or alter privy or urinal accommodation in premises where accommodation is not provided or is insufficient | Fifty rupees ... | Five rupees |
| Section 272 ... | Requisition on owner to provide privies and urinals for premises used by large numbers of people. | Two hundred rupees | Twenty rupees |
| Section 273 ... | Construction, maintenance and regulation of privies, urinals and appurtenances thereof in accordance with rules and by-laws. | Two hundred rupees | Twenty rupees. |
| Section 278, sub-section (*1*). | Requisition on owner of premises to close, remove, renew or take other order with house-drain, ventilation-shaft or pipe, cesspool, house-gully, privy or urinal. | Fifty rupees ... | Five rupees |

*(Part VIII.—Chapter XXXVI.—Penalties.—Section 488.)*

| 1 | 2 | 3 | 4 |
|---|---|---|---|
| Sections, sub-sections, clauses, provisos or rules. | Subject | Fine which may be imposed. | Daily fine which may be imposed |
| Section 279, sub-section (1). | Position of cesspools ... ... | Fifty rupees. | |
| Section 279, sub-section (2). | Requisition to remove or fill up cesspools | Fifty rupees ... | Twenty rupees |
| Section 280, sub-section (1). | Construction of house-drain, service privy, etc, within fifty feet of tank, well, etc | Twenty rupees. | |
| Section 280, sub-section (2) | Requisition on owner of land to remove receptacle for sewage or offensive matter | Twenty rupees .. | Five rupees |
| Section 284 clause (b) | Requisition on owner of premises to alter, pave, repair, etc, house-drain, cesspool, privy or urinal | One hundred rupees | Twenty rupees. |
| Section 285 .. | Requisition on occupier of premises to carry out work which owner may be required to carry out | The amount which may be levied as fine on the owner in each case | The amount which may be levied as daily fine on the owner in each case |
| Section 287 ... | Prohibition of certain acts in connection with drainage, etc | One hundred rupees | Twenty rupees |
| Section 291, sub section (1) | Prohibition of execution of certain work by persons other than licensed plumbers | One hundred and fifty rupees | |
| Section 291, sub-section (2). | Prohibition of owner or occupier of premises causing or allowing certain work to be executed by persons other than licensed plumbers | Fifty rupees | |
| Section 292, sub-section (2) . | Prohibition of licensed plumber demanding or receiving more than prescribed charge | One hundred rupees | |
| Section 294, sub-section (1). | Prohibition of licensed plumber infringing rules, executing work carelessly or negligently, or using bad materials, appliances or fittings | Fifty rupees | |
| Section 299, sub section (1) | Requisition on owner or occupier of building to remove or alter verandah, etc, or fixture. | One hundred rupees | Ten rupees |
| Section 300, sub-section (1). | Requisition on person to remove wall ... | Fifty rupees . | Ten rupees |
| Section 303, sub-section (1). | (i) Prohibition of erection of, or addition to, building or wall within street alignment prescribed under section 302. | Two hundred and fifty rupees | Twenty-five rupees. |
| | (ii) Requisition to remove building erected or added within street alignment prescribed under section 302. | Fifty rupees ... | Ten rupees. |

(*Part VIII.—Chapter XXXVI.—Penalties.—Section 438.*)

| 1 | 2 | 3 | 4 |
|---|---|---|---|
| Sections, sub-sections, clauses, provisos or rules | Subject. | Fine which may be imposed | Daily fine which may be imposed. |
| Section 303, sub-section (*3*). | Prohibition of erection of, or addition to, building between street alignment and building-line prescribed under section 302. | Two hundred rupees | Twenty rupees |
| Section 303, sub-section (*4*) | Requisition to remove building erected or added between street alignment and building line prescribed under section 302. | Fifty rupees ... | Ten rupees. |
| Section 309 ... | (*i*) Prohibition of erection of, or addition to, building or wall within street alignment of a street projected under section 308 | Two hundred and fifty rupees | Twenty-five rupees |
| | (*ii*) Requisition to remove building erected or added to on site between street alignment and building-line of a street projected under section 308 | Fifty rupees ... | Ten rupees. |
| Section 315 ... | Unlawfully making or laying out a private street | Two hundred and fifty rupees | Twenty-five rupees |
| Section 317, sub-section (*1*). | Requisition on owner of private street or owner or occupier of adjoining land to level, etc , such street. | One hundred rupees | Ten rupees. |
| Section 322, sub-section (*2*) | Prohibition of licensed building surveyor demanding or receiving more than the prescribed fee in the absence of a written contract | One hundred rupees | |
| Section 324, sub-section (*6*) | Erection of new building in contravention of declaration by the Corporation. | Two hundred rupees. | |
| Section 325 ... | Prohibition of erection of building without permission or so as to deprive another building of proper means of access. | Two hundred rupees | Fifty rupees. |
| Section 326 ... | Requisition upon owner of public building to make certain alterations in it for purposes of sanitation, etc. | Two hundred and fifty rupees. | Fifty rupees. |
| Section 327 ... | Requisition on owner to provide public building with external doors or to cause such doors to open outwards | One hundred rupees | Ten rupees |
| Section 328, sub-section (*1*). | Change in use of building without special permission. | Two hundred rupees in the case of a masonry building, and fifty rupees in the case of a hut. | Fifty rupees in the case of a masonry building, and ten rupees in the case of a hut. |
| Section 328, sub-section (*2*), proviso | Requisition to close shop ... ... | Twenty-five rupees | Five rupees. |
| Section 334, sub-section (*1*). | Erecting or using building for temporary purpose without approval of Corporation. | Fifty rupees ... | Ten rupees. |
| Section 337, sub-sections (*1*) and (*3*) | Requisition on owner of *bustee* of certain area to carry out improvements. | Two hundred rupees | Twenty rupees. |
| Section 340 ... | Erecting or adding to hut in a *bustee* before preparation of plan by owner and approval of same. | Fifty rupees. | |
| Section 341 ... | Erecting or adding to hut in a *bustee* contrary to standard plan. | Twenty-five rupees. | |

*(Part VIII.—Chapter XXXVI.—Penalties.—Section 188.)*

| 1 | 2 | 3 | 4 |
|---|---|---|---|
| Sections, sub-sections, clauses, provison or rules | Subject | Fine which may be imposed | Daily fine which may be imposed |
| Section 342, sub-section (*1*) | Requisition on owner to remove hut in *bustee* not in conformity with standard plan. | Twenty-five rupees | Five rupees |
| Section 343, sub-section (*1*) | Requisition on owner of *bustee* to construct drains, etc., and to fill up, etc., tanks, wells, etc., in accordance with standard plan. | Two hundred rupees | Twenty rupees |
| Section 346 ... | Requisition on owners to carry out in *bustee* improvements indicated in Schedule A annexed to report under section 344 | Two hundred rupees | Twenty rupees |
| Section 354, sub-section (*2*) | Failure to keep open private street in *bustee* for scavenging and other purposes and for use of tenants | Fifty rupees .. | Ten rupees |
| Section 355 ... | Failure to keep open bathing and privy accommodation in *bustee* for use of tenants. | Fifty rupees .. | Ten rupees |
| Section 356, sub-section (*2*) | Requisition on owner to maintain in proper order streets, drains, etc, in *bustee* according to standard plan | Two hundred rupees | Twenty rupees |
| Section 356, sub-section (*2*), proviso | Owner of hut to maintain convenience made by him for his own use. | Twenty-five rupees | Five rupees |
| Section 356, sub-section (*3*) | Requisition on tenant or tenants of *bustee* to repair street, passage, drain, etc. | Two hundred rupees | Twenty rupees |
| Section 359, sub-section (*5*) | Requisition on owner applying to re-erect huts to carry out improvements before re-erecting such huts. | One hundred rupees | Ten rupees |
| Section 360, sub-section (*4*) | Erection of hut or portion of hut within alignment prescribed for private streets in *bustee* or other area. | Fifty rupees. | |
| Section 361, sub-section (*1*) | Requisition on owners or occupiers to remove huts | Fifty rupees .. | Ten rupees |
| Section 362 ... | Requisition on person erecting masonry building in *bustee* to leave space of fifteen feet from centre line of street | One hundred rupees | Twenty rupees |
| Section 363, sub-section (*1*), clause (*i*). | Direction to alter or demolish work or structures | Two hundred and fifty rupees in the case of a masonry building, and twenty-five rupees in the case of a hut. | Twenty-five rupees in the case of a masonry building, and five rupees in the case of a hut. |
| Section 364, sub-section (*1*), clause (*a*) | Direction to alter or demolish certain structures. | One hundred rupees | Fifty rupees |
| Section 365, sub-section (*1*). | Requisition on person carrying on work unlawfully to stop work pending decision of Magistrate. | Two hundred and fifty rupees. | Fifty rupees |
| Section 368, sub-section (*1*). | Constructing private street, building, wall or other structure over municipal gas-pipe. | One hundred rupees | Twenty rupees |
| Section 369 ... | Keeping of animals ... ... | Fifty rupees ... | Five rupees. |

*(Part VIII.—Chapter XXXVI.—Penalties.—Section 488.)*

| 1 | 2 | 3 | 4 |
|---|---|---|---|
| Sections, sub-sections, clauses, provisos or rules. | Subject | Fine which may be imposed | Daily fine which may be imposed. |
| Section 371, sub section (2) | Provision of land in *bustee* when required for temporary deposit of rubbish, etc | Ten rupees ... | Three rupees. |
| Section 372, sub section (1) | Direction to collect rubbish and offensive matter and deposit it at or near entrance to premises | Ten rupees | |
| Section 372, sub-section (2) | Direction to collect rubbish and offensive matter and deposit it in public receptacle | Ten rupees | |
| Section 372, sub-section (3) | Direction to collect rubbish and offensive matter and deposit it in lump in street or premises | Ten rupees | |
| Section 373 . | Direction to collect and remove rubbish and offensive matter accumulating on business premises or on premises in which building work is going on. | Ten rupees | |
| Section 377, clause (b) | Prohibition of use by the public for bathing, etc, of any place not constructed therefor | Ten rupees | |
| Section 381, sub-section (3) | Using building declared unfit for human habitation | Two hundred and fifty rupees | Fifty rupees |
| Section 382, sub section (2) | Requisition on owner and occupier to demolish, or execute work on, building declared unfit for human habitation | Two hundred and fifty rupees | Fifty rupees |
| Section 383 ... | Requisition on owner or occupier to furnish statement of occupants, accommodation, etc, of building | Twenty five rupees | Five rupees. |
| Section 384, sub-section (1) | Requisition on owner or occupier to abate overcrowding in building or room. | Twenty-five rupees | Five rupees |
| Section 385, sub-section (1) | Establishing, or materially altering, enlarging or extending, factory, etc, without permission. | One thousand rupees | Two hundred rupees |
| Section 386 sub-section (1) | Using premises for certain trades, etc., without license or contrary to terms of license | Two hundred and fifty rupees | Fifty rupees. |
| Section 387 sub-section (5) | Using premises in declared area for any purpose referred to or mentioned in section 386 | Fifty rupees .. | Five rupees |
| Section 388 ... | Failure to comply with direction of Magistrate in regard to use of premises proved to be a nuisance. | Five hundred rupees | One hundred rupees. |
| Section 389, sub-section (1) | Fouling water in carrying on trade or manufacture. | One thousand rupees | Two hundred rupees. |
| Section 390, sub section (1) | Using eating-house, etc, without license or contrary to terms of license. | Fifty rupees ... | Five rupees. |
| Section 391 ... | Keeping open theatre, circus or other place of public amusement without license or contrary to terms of license. | Five hundred rupees | One hundred rupees. |

*(Part VIII.—Chapter XXXVI—Penalties.—Section 488.)*

| 1 | 2 | 3 | 4 |
|---|---|---|---|
| Sections, sub-sections, clauses, provisos or rules. | Subject | Fine which may be imposed. | Daily fine which may be imposed |
| Section 394, sub-section (1). | Sale in municipal market without license | Twenty five rupees. | |
| Section 395, sub-section (2) | Establishing new private market without sanction of Corporation. | One thousand rupees | |
| Section 396, sub section (1) | Keeping open, etc, private market, permitting any place to be used as private market, or using place as slaughter-house or stock-yard without license, or contrary to terms of license | Two hundred rupees | Twenty five rupees |
| Section 398 .. | Using as market a place which Magistrate has directed to be closed. | One hundred rupees | Twenty rupees |
| Section 399 ... | Requisition to pave and drain private market, *bazar*, private slaughter house or place set apart for sacrifice of animals, and to alter structures in private market | Fifty rupees | Ten rupees |
| Section 400, sub-sections (1) and (2) | Requisition on owner or occupier of private market or *bazar* to lay out, alter, etc, approaches, roads, passages and ways, and to provide conveniences for, and maintain, the same, and to provide ventilation and lighting of market building. | Fifty rupees | Ten rupees |
| Section 402, sub-section (2). | Destruction, etc, of by laws and table of charges posted up in market or slaughter house | Ten rupees | |
| Section 404, sub section (2) | Requisition on tenant or agent to remove himself from market or slaughter-house. | Fifty rupees ... | Ten rupees |
| Section 405, sub-section (1) | Carrying on trade of butcher or selling animals, meat or fish outside market without license | One hundred rupees | Ten rupees |
| Section 406, sub section (1) | Sale, etc, of adulterated or misbranded food or drug. | Five hundred rupees | |
| Section 407, sub-section (1) | Sale, etc, of milk, butter, *ghee*, wheat flour, mustard oil, tea, edible oil or fat or notified article, which is not of the prescribed quality. | Five hundred rupees | |
| Section 407, sub-section (2) | Sale, etc, of articles similar to milk butter, *ghee*, etc | Two hundred and fifty rupees | |
| Section 408, sub-section (1). | Registration of manufactory of mustard oil or edible oils | Fifty rupees ... | Five rupees |
| Section 408, sub-section (2) | Keeping of register by owner or person in charge of manufactory of mustard oil or edible oils in regard to substances sent out from the manufactory. | Fifty rupees ... | Five rupees. |
| Section 410, sub-section (1) | Keeping or permitting to be kept substance intended to be used for adulteration of milk, butter, *ghee*, wheat flour, mustard oil, tea, edible oil or fat or notified article | Two hundred and fifty rupees | |

(*Part VIII.—Chapter XXXVI.—Penalties.—Section 488.*)

| 1 | 2 | 3 | 4 |
|---|---|---|---|
| Sections, sub-sections, clauses, provisos or rules | Subject. | Fine which may be imposed | Daily fine which may be imposed |
| Section 411 ... | Sale of tin or other receptacle containing separated or skimmed condensed milk, not properly labelled. | Two hundred and fifty rupees | |
| Section 412, sub-section (*1*). | Sale of diseased or unwholesome animal or article intended for human food | Two hundred and fifty rupees | |
| Section 413, sub-section (*1*). | Keeping shop or place for retail sale of drugs without a license | One hundred rupees | Twenty rupees |
| Section 413, sub-section (*2*) | Display of license in premises ... | Fifty rupees ... | Ten rupees. |
| Section 415, sub-section (*1*). | Compounding, etc, drugs in licensed shop or place without certificate or permission | Fifty rupees | |
| Section 415, sub-section (*2*) | Employing unauthorized person to compound, etc, drugs in licensed shop or place. | Two hundred rupees | |
| Section 419, sub-section (*3*) | Removing, interfering or tampering with animal, food, drug, etc, seized and left in custody | Two hundred rupees | |
| Section 424, sub-sections (*1*), (*2*) and (*3*) | Refusal to sell or surrender articles of food or drug required for purposes of analysis | One hundred rupees | |
| Section 428 ... | Sale of milk without license ... | One hundred rupees | Ten rupees. |
| Section 430 ... | Requisition to furnish a list of dairies from which the licensees' supply of milk is obtained | Fifty rupees ... | Five rupees |
| Section 431, sub-section (*5*) | Sale or supply of prohibited milk ... | Two hundred and fifty rupees for a first offence and five hundred rupees for any subsequent offence | |
| Section 433 ... | Information of existence of dangerous disease | One hundred rupees | |
| Section 435 .. | Medical practitioners to give information of existence of dangerous disease | Fifty rupees | |
| Section 437, sub-section (*2*) | Removing or using, for the purpose of drinking or of washing clothes, water which is likely to engender or spread a dangerous disease. | Two hundred rupees | Twenty rupees |
| Section 438, sub-section (*2*). | Removal to hospital of patient suffering from dangerous disease. | One hundred rupees. | |
| Section 439, sub-section (*1*). | Requisition on occupier to vacate building or part thereof to admit of disinfection. | Fifty rupees ... | Ten rupees |
| Section 441 ... | Letting infected building ... ... | Five hundred rupees | |
| Section 442, sub-section (*2*). | Washing infected article at unauthorized place. | One hundred rupees | |
| Section 442, sub-section (*3*). | Direction to disinfect or destroy articles likely to retain infection. | One hundred rupees. | |
| Section 443, sub-section (*1*). | Transmitting, etc., infected article ... | Two hundred rupees. | |

*(Part VIII.—Chapter XXXVI.—Penalties.—Section 488.)*

| 1 | 2 | 3 | 4 |
|---|---|---|---|
| Sections, sub-sections, clauses, provisos or rules | Subject | Fine which may be imposed | Daily fine which may be imposed |
| Section 444, sub-section (1) | Infected person entering or causing or permitting himself to be carried in, or carrying of dead-body in, public conveyance. | Fifty rupees | |
| Section 444, sub-section (3) | Carrying infected person or dead-body in public conveyance | Two hundred rupees | |
| Section 445, sub-section (1) | Taking public conveyance to appointed place for disinfection. | Two hundred rupees | |
| Section 445, sub-section (2) | Intimation of number, and disinfection of infected conveyance | Two hundred rupees | |
| Section 445, sub-section (3) | Using infected public conveyance .. | Five hundred rupees | |
| Section 446, sub-section (2) | Carrying infected persons or dead bodies in other than special conveyances without sanction of Health Officer | Two hundred rupees | |
| Section 451 ... | Information of birth ... ... | Ten rupees | |
| Section 452 ... | Information of death ... ... | Ten rupees | |
| Section 453 ... | Notice by medical practitioner to Health Officer stating cause of death | Fifty rupees | |
| Section 455 ... | Burying, burning or otherwise disposing of corpse without certificate | One hundred rupees | |
| Section 457, sub-section (1) | Registration of place for disposal of the dead, and depositing of plan in municipal office | One hundred rupees | |
| Section 459 ... | Opening or using place for disposal of the dead without permission | Five hundred rupees | |
| Section 460, sub section (2) | Prohibition of use of place of public worship, etc., for disposal of the dead | Five hundred rupees | |
| Section 462, sub-section (1) | Making vault, grave or interment, or disposing of corpse, or exhuming corpse, in certain cases, without permission | Five hundred rupees | |
| Section 466, sub-section (2) | Census enumerators to obey written instructions of Superintendent | Fifty rupees | |
| Section 467, sub-section (1) | Certain persons to act as census enumerators | Fifty rupees | |
| Section 498, sub-section (5) | Production of license or written permission | Fifty rupees ... | Ten rupees |
| Section 509 ... | Obstructing Executive Officer or other person in entering into or upon premises. | Two hundred rupees for a first offence and five hundred rupees for any subsequent offence | |
| Section 527, sub-section (3) | Occupier to afford facilities to owner for complying with Act, rules, by laws and requisitions | One hundred rupees | Twenty rupees |
| Section 549, sub-section (1), clause (a) | Direction to owner of building to demolish the same | Five hundred rupees in the case of a masonry building, and fifty rupees in the case of a hut | One hundred rupees in the case of a masonry building, and ten rupees in the case of a hut |

*(Part VIII.—Chapter XXXVI.—Penalties.—Section 488.)*

| 1 | 2 | 3 | 4 |
|---|---|---|---|
| Sections, sub-sections, clauses, provisos or rules | Subject. | Fine which may be imposed | Daily fine which may be imposed. |
| Schedule XIV, rule 1, sub-rule (2) | Requisition on owner to lay down separate service-pipe from main for supply of water to his premises. | Fifty rupees ... | Ten rupees. |
| Schedule XIV, rule 2, sub-rule (1) | Obligation on owner to provide separate stop cocks for controlling supply of unfiltered water | Fifty rupees ... | Ten rupees. |
| Schedule XIV, rule 3 | Requisition on owner to fix outer stop-cock so as always to be accessible from nearest street | Fifty rupees ... | Ten rupees |
| Schedule XIV, rule 5, sub-rule (3) | Executing works for supply of water otherwise than in presence of authorized municipal officer | Fifty rupees | |
| Schedule XIV, rule 7, sub-rule (1) | Requisition on owner or occupier of premises to replace or alter fittings for supply of water | Fifty rupees ... | Five rupees |
| Schedule XIV, rule 12 | Fraud in respect of meter ... ... | One hundred rupees | |
| Schedule XIV, rule 13 | Injuring meter or fittings thereof ... | One hundred rupees | |
| Schedule XV, rule 14, sub rule (2) | Requisition on owner or occupier of premises to repair, flush, cleanse, etc., or take other order with house-drain | Fifty rupees .. | Five rupees |
| Schedule XV, rule 15, sub-rule (2) | Requisition on owner or occupier of premises to repair, flush, cleanse or empty joint house drain | Fifty rupees ... | Five rupees |
| Schedule XV, rule 16, sub-rule (1) | Requisition on person laying private underground drain to alter or add to the work | Fifty rupees ... | Five rupees |
| Schedule XV, rule 17 | Unlawfully constructing drain so as to pass beneath a building | One hundred rupees | |
| Schedule XV, rule 21, sub-rule (4) | Attaching service-privy or service-urinal to inhabited portion of any building. | Fifty rupees ... | Five rupees |
| Schedule XV, rule 22, sub-rule (1) | Placing service-privy or service-urinal on upper floor. | Twenty rupees ... | Five rupees |
| Schedule XV, rule 22, sub-rule (2) | Requisition to convert service-privy or service-urinal into a connected-privy or connected-urinal | Twenty rupees ... | Five rupees. |
| Schedule XV, rule 23, sub-rule (1). | Requisition to form a passage giving access to a privy or urinal from the street. | Twenty rupees ... | Five rupees. |
| Schedule XV, rule 38. | Requisition to alter privy or urinal ... | Twenty rupees ... | Five rupees |
| Schedule XVI, rule 1, sub-rule (2) | Requisition to trim, prune or cut hedges and trees. | Ten rupees ... | Three rupees |
| Schedule XVI, rule 2, sub-rule (1). | Erection of verandah supported by pillars resting on street | Two hundred and fifty rupees. | Fifty rupees. |
| Schedule XVI, rule 2, sub-rule (2). | Placing roof on certain verandahs ... | One hundred rupees | Twenty rupees. |

*(Part VIII.—Chapter XXXVI.—Penalties.—Section 488.)*

| 1 | 2 | 3 | 4 |
|---|---|---|---|
| Sections, sub sections, clauses, provisos or rules. | Subject. | Fine which may be imposed | Daily fine which may be imposed |
| Schedule XVI, rule 2, sub rule (3) | Putting up verandahs, etc, to project over street without permission | Two hundred and fifty rupees | Fifty rupees. |
| Schedule XVI, rule 2, sub rule (5) | Requisition on owner or occupier of building to comply with condition subject to which permission was given to put up verandahs, etc, projecting over street | One hundred rupees | Twenty rupees. |
| Schedule XVI, rule 2, sub-rule (6) | Requisition on owner or occupier of building to remove verandahs, etc, projecting over street | One hundred rupees | Twenty rupees |
| Schedule XVI, rule 3, sub-rule (1) | Erection or maintenance of sky-sign without permission | Two hundred rupees | Fifty rupees. |
| Schedule XVI, rule 4, sub rule (2) | Unlawfully removing fence or shoring-timber or removing or extinguishing light. | Fifty rupees | |
| Schedule XVI, rule 5, sub rule (3) | Unlawfully infringing order prohibiting traffic or removing bar, chain or post in street. | Fifty rupees | |
| Schedule XVI, rule 6, sub-rule (2) | Unlawfully destroying, pulling down, etc, name of public street | Twenty rupees | |
| Schedule XVI, rule 7, sub-rule (2) | Unlawfully destroying, pulling down, etc, number of premises or affixing a private number | Twenty rupees | |
| Schedule XVII, rule 5, sub-rule (1). | Requisition to provide staircases | Fifty rupees | Ten rupees |
| Schedule XVII, rule 5, sub rule (2) | Requisition to provide lift or similar contrivance | Fifty rupees | Ten rupees |
| Schedule XVII, rule 7 sub rule (1) | Construction of external roofs or walls of buildings with inflammable materials | Fifty rupees | Five rupees |
| Schedule XVII, rule 7, sub rule (2) | Requisition on owner of building to remove or alter external roof or wall | Twenty five rupees | Five rupees. |
| Schedule XVII, rule 19. | Sending written notice to Corporation before commencing to erect masonry building | Twenty-five rupees | |
| Schedule XVII, rule 20 | Sending written notice or certificate, or sending untrue certificate, to Corporation after completion of erection of masonry building | Fifty rupees | |
| Schedule XVII, rule 22, sub-rule (1) | Requisition on owner of building to make specified alterations | Two hundred and fifty rupees in the case of a masonry building, and twenty-five rupees in the case of a hut. | Twenty-five rupees in the case of a masonry building, and five rupees in the case of a hut |
| Schedule XVII, rule 55, sub-rule (1) and sub-rule (4) | Employment of licensed building surveyor or other competent person to supervise erection of certain masonry buildings | One hundred rupees | Ten rupees |
| Schedule XVII, rule 62. | Erection of masonry building without written permission. | Two hundred rupees | |

*(Part VIII.—Chapter XXXVI—Penalties.—Section 488.)*

| 1 | 2 | 3 | 4 |
|---|---|---|---|
| Sections, sub-sections, clauses, provisos or rules | Subject. | Fine which may be imposed | Daily fine which may be imposed. |
| Schedule XVII, rule 64, sub-rule (*1*) | Erection of masonry building without fresh permission after lapse of original permission | One hundred rupees. | |
| Schedule XVII, rule 88, sub-rule (*1*). | Erection of hut without written permission. | Fifty rupees | |
| Schedule XVII, rule 89. | Erection of hut without fresh permission after lapse of original permission | Twenty-five rupees | |
| Schedule XVIII, rule 2. | Requisition on owner or occupier to lime-wash or otherwise cleanse building | Twenty-five rupees | Five rupees |
| Schedule XVIII, rule 3. | Requisition on owner or person concerned to secure, enclose, cleanse or clear land or building which is untenanted, filthy or a nuisance | Twenty-five rupees | Five rupees |
| Schedule XVIII, rule 4, sub-rule (*1*) | Requisition on owner or occupier to take down, repair or secure wall, building or fixture in a ruinous state, etc | Two hundred and fifty rupees. | One hundred rupees |
| Schedule XVIII, rule 4, sub rule (*2*) | Requisition on inmate to vacate building in ruinous state, etc | One hundred rupees | Fifty rupees |
| Schedule XVIII, rule 6, sub-rule (*1*) | Requisition on owners or occupiers to execute works or take measures with respect to buildings or block of buildings in order to prevent risk of disease | Five hundred rupees in the case of a masonry building or block of masonry buildings, and one hundred rupees in the case of a hut or block of huts | One hundred rupees in the case of a masonry building or block of masonry buildings, and twenty rupees in the case of a hut or block of huts. |
| Schedule XVIII, rule 7, sub-rule (*1*). | Requisition to cleanse, fill up or dewater well, pool, ditch, tank, pond or marshy ground, or to drain off or remove waste or stagnant water | Two hundred rupees | Fifty rupees. |
| Schedule XVIII, rule 9, sub-rule (*3*). | Making excavation or digging cesspool, tank, pond, well or pit after prohibition | One hundred rupees. | |
| Schedule XVIII, rule 9, sub-rule (*4*) | Requisition on owner or occupier of land to fill up excavation, cesspool, tank, pond, well or pit unlawfully made. | Fifty rupees ... | Five rupees |

*(Part VIII.—Chapter XXXVI.—Penalties.—Sections 489—491)*

Certain offences punishable with increased fine or imprisonment, or both, for a second or subsequent conviction

**489.** Whoever commits any offence by contravening any provision of the section or any of the sub-sections of this Act mentioned in the first column of the following table shall, notwithstanding anything contained in section 488, be punished, for a second or subsequent offence, with fine or imprisonment, or with both, to the extent mentioned in the third column thereof.

*Explanation*—The entries in the second column of the following table, headed "Subject" are not intended as definitions of the offences described in the provisions mentioned in the first column, or even as abstracts of those provisions, but are inserted merely as references to the subject thereof —

| 1 | 2 | 3 |
|---|---|---|
| Section or sub-sections | Subject | Maximum fine or imprisonment, or both, which may be imposed for a second or subsequent offence |
| Section 406, sub-section (*1*) | Sale, etc, of adulterated or misbranded food or drug | One thousand rupees, or imprisonment for three months, or both. |
| Section 407, sub-section (*1*) | Sale, etc., of milk, butter, *ghee*, wheat flour, mustard oil, tea, edible oil or fat or notified article, which is not of the prescribed quality | One thousand rupees, or imprisonment for three months, or both |
| Section 407, sub-section (*2*) | Sale, etc, of articles similar to milk, butter, *ghee*, etc | Five hundred rupees, or imprisonment for three months, or both |
| Section 410, sub-section (*1*) | Keeping or permitting to be kept substance intended to be used for adulteration of milk, butter, *ghee*, wheat flour, mustard oil, tea, edible oil or fat or notified article. | Five hundred rupees, or imprisonment for three months, or both |
| Section 411 ... | Sale of tin or other receptacle containing separated or skimmed condensed milk, not properly labelled. | Five hundred rupees, or imprisonment for three months, or both. |
| Section 412, sub-section (*1*). | Sale of diseased or unwholesome animal or article intended for human food | Five hundred rupees, or imprisonment for three months, or both |

Punishment for contravening rule made under section 447.

**490.** Whoever contravenes any provision of any rule made under section 447 shall be deemed to have committed an offence punishable under section 188 of the Indian Penal Code. XLV of 1860

Punishment for acquiring share or interest in contract, etc., with the Corporation.

**491.** If any municipal officer or servant knowingly acquires, directly or indirectly, by himself or a partner or employer or employé, otherwise than as such officer

*(Part VIII.—Chapter XXXVI.—Penalties.—Sections 492, 493.)*

or servant, any share or interest in any contract or employment with, by, or on behalf of, the Corporation, not being a share or interest such as, under clause (*ii*) or clause (*iv*) of proviso (*a*) to sub-section (*1*) of section 22, it is permissible for a Councillor or an Alderman to have without being thereby disqualified for being a Councillor or an Alderman, he shall be deemed to have committed the offence made punishable by section 168 of the Indian Penal Code. XLV of 1860.

Fine for not taking out certain licenses

**492.** (*1*) If any person—

(*a*) owns or is in charge of any carriage or animal liable to any tax imposed under Chapter XI, or

(*b*) exercises on or after the first day of July in any year, any profession, trade or calling referred to in Chapter XII, or

(*c*) exercises on or after the first day of June or the first day of December in any year any calling referred to in Chapter XIII,

without having the license prescribed by those chapters, respectively, he shall be punished with fine which—

(*i*) may extend to three times the amount payable in respect of such license, and

(*ii*) shall not ordinarily be less than one-and-a-half times such amount

(*2*) Such fine, when levied, shall be taken in full satisfaction of the demand on account of the said license.

(*3*) The provisions of this section shall apply to any person who, having compounded for the payment of a certain sum under section 170, fails to pay such sum, the amount due for a license being taken as the amount so compounded for.

Fine for unlawfully commencing, carrying on or completing building work

**493.** If the erection of any new building—

(*a*) is commenced without obtaining the written permission of the Corporation, or

(*b*) is carried on or completed otherwise than in accordance with the particulars on which such permission was based, or

(*c*) is carried on or completed in breach of any provision contained in this Act or in any rules or by-laws made thereunder, or of any direction or requisition lawfully given or made under this Act or such rules or by-laws, or

if any alteration of, or addition to, any building or any other work made or done for any purpose in, to or upon any building is commenced, carried on or completed in breach of section 330,

the owner of the building shall be liable to fine which may extend in the case of a masonry building to five hundred rupees and in the case of a hut to fifty rupees, and to further fine which may extend in the case of a masonry building to one hundred rupees and in the case of a hut to ten rupees for each day

*(Part VIII.—Chapter XXXVI.—Penalties.—Sections 494—497.)*

during which the offence is continued after the first day:

Provided that where an application has been made under section 363 or section 364, no proceedings shall be instituted by the Corporation under this section.

Fine for putting building to other than declared use

**494.** When a new building has been erected, or when any building has been altered or added to after a statement has been made, under rule 53 or rule 81 of Schedule XVII, that it was intended to use the building or any substantial part thereof for any of the purposes specified in Schedule XIX, or as a stable, cattle-shed or cow-house, then any person putting the building or such part thereof to any use other than that so stated shall be liable,—

(*a*) in the case of a masonry-building, to fine which may extend to two hundred and fifty rupees, and to further fine which may extend to fifty rupees for every day after the first during which he continues such use, and,

(*b*) in the case of a hut, to fine which may extend to twenty-five rupees, and to further fine which may extend to five rupees for every day after the first during which he continues such use.

Fine for using building for carrying on offensive trade without previous declaration

**495.** When a new building has been erected, or when any building has been altered or added to under this Act without any statement having been made under rule 53 or rule 81 of Schedule XVII, that it was intended to use the building or any substantial part thereof for any of the purposes specified in Schedule XIX, or as a stable, cattle-shed or cow-house, then any person using the building or such part thereof for any of those purposes shall be liable,—

(*a*) in the case of a masonry building, to fine which may extend to two hundred and fifty rupees, and to further fine which may extend to fifty rupees for every day after the first during which he continues such use, and,

(*b*) in case of a hut, to fine which may extend to twenty-five rupees, and to further fine which may extend to five rupees for every day after the first during which he continues such use.

Penalty on *mehters*, etc., withdrawing from work without notice

**496.** Any *mehter* or other servant of the Corporation referred to in section 376 who withdraws from his duties in contravention of that section shall be punished with fine which may extend to fifty rupees, or with simple imprisonment for a term which may extend to three months, or with both, and shall be liable to forfeit any salary which may be due to him.

Penalty for obstructing contractor or removing mark.

**497.** Any person who, in contravention of section 555, obstructs or molests any person with whom the Corporation have entered into a contract, or, in contravention of section 556, removes any mark, shall be punished with fine which may extend to two hundred rupees, or with imprisonment for a term which may extend to two months.

## PART IX.

## CHAPTER XXXVII.

### PROCEDURE.

*Licenses and written permissions.*

Duration, conditions, signature, suspension, revocation and production of licenses and written permissions

**498.** (*1*) Every license and written permission granted under this Act or under any rule or by-law made thereunder shall be signed by the Executive Officer and shall specify—

(*a*) the date of the grant thereof;

(*b*) the purpose and the period (if any) for which it is granted;

(*c*) the restrictions and conditions (if any) subject to which it is granted;

(*d*) the name of the person to whom it is granted; and

(*e*) the tax or fee, if any, paid for the license or written permission.

(*2*) Except when it is in this Act or in any rule or by-law made thereunder otherwise expressly provided, for every such license or written permission a fee may be charged at such rate as may from time to time be fixed by the Corporation, and such fee shall be payable by the person to whom the license is granted

(*3*) Subject to the provisions of proviso (*i*) to sub-section (*1*) of section 396, any license or written permission granted under this Act or under any rule or by-law made thereunder may at any time be suspended or revoked by the authority by whom it was granted, if any of its restrictions or conditions is infringed or evaded by the grantee, or if the grantee is convicted of a breach of any of the provisions of this Act or of any rule or by-law made thereunder in any matter to which such license or permission relates.

(*4*) When any such license or written permission is suspended or revoked, or when the period for which the same was granted has expired, the grantee shall for all purposes of this Act or of any rule or by-law made thereunder be deemed to be without a license or written permission until such time (whether within the said period or otherwise) as the authority granting the same may see fit to cancel the order suspending or revoking the license or written permission, or until the license or written permission is renewed, as the case may be.

(*5*) Every grantee of any such license or written permission shall at all reasonable times, while such license or written permission remains in force, produce the same at the request of the Executive Officer.

*Public notices and advertisements.*

Public notices how to be made known.

**499.** Every public notice given under this Act or under any rule or by-law made thereunder shall be in writing under the signature of the Executive Officer,

and shall be widely made known in the locality to be affected thereby, by affixing copies thereof in conspicuous public places within the said locality, or by publishing the same by beat of drum or by

*(Part IX.—Chapter XXXVII.—Procedure.—Sections 500—504.)*

advertisement in local newspapers, or by any two or more of these means, and by any other means that the Executive Officer may think fit.

Newspapers in which advertisements or notices to be published

**500.** Whenever it is provided by this Act or by any rule or by-law made thereunder that notice shall be given by advertisement in local newspapers, or that a notification or any information shall be published in local newspapers, such notice, notification or information shall be inserted, if practicable, in at least two English newspapers and two vernacular newspapers published in Calcutta.

*Evidence.*

Proof of consent, etc., of Corporation or municipal officer

**501.** Whenever under this Act or under any rule or by-law made thereunder the doing or the omitting to do anything or the validity of anything depends upon the approval, sanction, consent, concurrence, declaration, opinion or satisfaction of—

(*a*) the Corporation, or

(*b*) any municipal officer,

as the case may be, a written document signed in case (*a*) by the Secretary to the Corporation, and in case (*b*) by the said municipal officer, purporting to convey or set forth such approval, sanction, consent, concurrence, declaration, opinion or satisfaction, shall be sufficient evidence thereof

*Signature and service of notices, etc.*

Signature on notices, etc., may be stamped

**502.** (*1*) Every license, written permission, notice, bill, summons or other document, which is required by this Act or by any rule or by-law made thereunder to bear the signature of any municipal officer, shall be deemed to be properly signed if it bears a facsimile of the signature of such municipal officer stamped thereupon.

(*2*) Nothing in sub-section (*1*) shall be deemed to apply to a cheque drawn upon the Municipal Fund under section 83.

Notices, etc., by whom to be served or issued

**503.** All notices, bills, summonses and other documents required by this Act or by any rule or by-law made thereunder to be served upon, or issued to, any person, shall be so served or issued by municipal officers or servants or by other persons authorized by the Executive Officer in that behalf

Service how to be effected on owner or occupier of premises

**504.** When any notice, bill, summons or other document is required by this Act or by any rule or by-law made thereunder to be served upon or issued to any person as owner or occupier of any land or building, it shall not be necessary to name the owner or occupier in the document, and the service or issue thereof shall be effected—

(*a*) by giving or tendering such document to the owner or occupier :

Provided that if there is more than one owner or occupier and it is not in the opinion of the Corporation practicable to serve the document on every one of them, the Corporation may serve the document on any one or more of them as they think fit;

*(Part IX.—Chapter XXXVII.—Procedure.—Sections 505—507.)*

(*b*) if the owner or occupier is not found, by giving or tendering such document or by sending it by registered post to any adult male member of the family, or to a servant in the employ, of the owner or occupier or of any one of the owners or occupiers; or,

(*c*) if none of the means mentioned in clause (*a*) or clause (*b*) be available, by causing a notice on yellow paper, in the form prescribed in Schedule XXIII, or in a form to the like effect, setting forth the substance of such document, to be affixed on some conspicuous part of the land or building to which the document relates.

Service how to be effected otherwise than on owner or occupier of premises

**505.** When any notice, bill, summons or other document is required by this Act or by any rule or by-law made thereunder to be served upon or issued to any person otherwise than as owner or occupier of any land or building, such service or issue shall be effected—

(*a*) by giving or tendering such document to such person; or,

(*b*) if such person is not found, by leaving such document at his last known place of abode or business in Calcutta, or by giving or tendering the same or by sending it by registered post to any adult male member of his family or servant in his employ; or,

(*c*) if such person does not reside in Calcutta and his address elsewhere is known to the Executive Officer, by forwarding such document to him by registered post under cover bearing the said address; or,

(*d*) if none of the means referred to in clauses (*a*), (*b*) or (*c*) be available, by causing a notice on yellow paper in a form prescribed in Schedule XXIII, or in a form to the like effect, setting forth the substance of such document, to be affixed on some conspicuous part of the land or building (if any) to which the document relates.

Sections 503 to 505 not to apply to Magistrate's summons

**506.** Nothing in sections 503, 504 and 505 shall apply to any summons issued under this Act by a Magistrate.

*Powers of entry.*

Power to Executive Officer to enter premises to inspect, survey, etc, and to use force in certain cases

**507.** (*1*) The Executive Officer may enter into or upon any premises, with or without assistants or workmen, in order to make any inspection, survey, measurement, valuation or inquiry, or execute any work which is authorized by this Act or by any rule or by-law made thereunder, or which, in his opinion, it is necessary for any of the purposes or in pursuance of any of the provisions of this Act or of any such rule or by-law, to make or execute:

Provided as follows:—

(*a*) except when it is in this Act or in any rule or by-law made thereunder otherwise expressly provided, no such entry shall be made between sunset and sunrise;

(*b*) except when it is in this Act or in any rule or by-law made thereunder otherwise expressly provided, no dwelling-house, and no public building or hut which is used as a dwelling-place, shall be so entered, unless with the consent of the occupier thereof, without giving the said occupier at least twenty-four hours' previous written notice of the intention to make such entry;

(*c*) notwithstanding any power to enter any premises conferred upon the Executive Officer by this Act or by any rule or by-law made thereunder, sufficient notice of such entry shall in every instance be given to enable the inmates of any apartment appropriated to females to withdraw to some part of the premises where their privacy need not be disturbed;

(*d*) due regard shall always be had, so far as may be compatible with the exigencies of the purpose for which the entry is made, to the social and religious usages of the occupants of the premises entered.

(*2*) The Executive Officer shall not use any force for the purpose of effecting any entry under sub-section (*1*), unless—

(*i*) such entry cannot otherwise be effected, and

(*ii*) there is reason to believe that an offence is being, or has been, committed against any provision of this Act or any rule or by-law made thereunder.

(*3*) Except when it is in this Act or in any rule or by-law made thereunder otherwise expressly provided, no claim shall lie against any person for compensation for any damage necessarily caused by any entry made under sub-section (*1*), or by the use of any necessary force under sub-section (*2*).

Power to Executive Officer to enter on lands adjacent to works

**508.** (*1*) The Executive Officer may enter upon any land adjoining or within one hundred yards of any works authorized by this Act or by any rule or by-law made thereunder for the purpose of depositing upon such land any soil, gravel, sand, lime, bricks, stone or other materials, or of obtaining access to such works, or for any other purpose connected with the carrying on of such works.

(*2*) The Executive Officer shall, before entering upon any land under sub-section (*1*), give the owner and occupier (if any) three days' previous written notice of his intention to make such entry, and of the purpose thereof, and shall, if so required by the owner or occupier, set apart by sufficient fences so much of the land as may be required for the purposes mentioned in the said sub-section.

(*3*) The Executive Officer shall not be bound to make any payment, tender or deposit before entering upon any land under sub-section (*1*), but shall do as little damage as may be, and shall pay compensation to the owner and occupier (if any) of the land for such entry and for any temporary damage that may be done in consequence thereof, and shall also pay compensation to the said owner for any permanent damage resulting therefrom.

*(Part IX.—Chapter XXXVII.—Procedure.—Sections 509—511.)*

(*4*) If such owner or occupier is dissatisfied with the amount of compensation paid to him by the Executive Officer, he may appeal to the Corporation, whose decision shall be final.

Prohibition of obstructing entry under sections 507 or 508

**509.** No person shall, in any way, obstruct the Executive Officer in making any entry under section 507 or section 508, or any municipal officer or other person accompanying the Executive Officer at his request or acting under his orders for the purpose of such entry.

*Enforcement of orders to execute work, etc*

Time for complying with requisition or order, and power to Corporation to enforce requisition or order in default of person directed

**510.** (*1*) When any requisition or order is made under this Act or under any rule or by-law made thereunder, by written notice issued by the Corporation or by any municipal officer empowered under section 12 in this behalf,—

(*a*) a reasonable period shall be prescribed in such notice for carrying such requisition or order into effect, and

(*b*) a reasonable period shall be prescribed in such notice within which any written objection thereto shall be received by the Corporation or the municipal officer issuing the notice.

(*2*) If, in any case not otherwise provided for in this Act or in any rule or by-law made thereunder, such requisition or order or any portion thereof is not complied with within the period prescribed under clause (*a*) of sub-section (*1*), the Executive Officer may, subject to the provisions of sections 511, 512, and 513, take such measures, or cause such work to be executed or such things to be done, as may, in his opinion, be necessary for giving due effect to the requisition or order so made;

and, unless it is in this Act or in any rule or by-law made thereunder otherwise expressly provided, the expenses thereof shall be paid by the person or by any one of the persons to whom such requisition or order was addressed

(*3*) The Executive Officer may take any measure, execute any work or cause anything to be done under this section whether or not the person who has failed to comply with the requisition or order is liable to punishment, or has been prosecuted or sentenced to any punishment, under this Act or under any rule or by-law made thereunder for such failure.

Submission of objections to complying with notice

**511.** (*1*) Any person who is served with a written notice in which a period for receiving objections has been prescribed under clause (*b*) of sub-section (*1*) of section 510 may, within the said period, deliver to the Corporation or the municipal officer by whom it was issued a written objection setting forth any reasons which he may desire to urge for the withdrawal or modification of the notice.

(*2*) If any such objection be delivered before the expiration of the said period, the execution of the work shall be postponed until the Corporation or the municipal officer by whom the notice was issued has passed orders on the objection.

*(Part IX.—Chapter XXXVII.—Procedure—Sections 512—514.)*

(3) If the objector has stated in his written objection that he wishes to be heard in person, he shall be entitled to be so heard, and the objection shall be considered in his presence, at a time to be fixed by notice issued in this behalf by the Corporation or the municipal officer by whom the notice was issued

Right of person served with notice to require estimate of expenses of work

**512.** (1) Any person on whom a written notice referred to in section 511, sub-section (1), has been served may,—

(a) instead of delivering an objection under section 511, or

(b) at the time of delivering such an objection,

apply, within the period prescribed in clause (b) of sub-section (1) of section 510, to the Corporation or the municipal officer by whom the notice was issued for an estimate of the expenses which would be incurred if the notice were enforced under section 510, sub-section (2); and, on receipt of such an application, the Corporation or the said officer shall supply such estimate

(2) If the Corporation or the said officer fail to supply such estimate, not more than five rupees shall be charged to the said person for any work executed by the Executive Officer by way of enforcing the said notice under section 510

Reference of objections to Corporation

**513.** (1) If any estimate supplied under section 512 in respect of any work referred to in any written notice exceeds three hundred rupees, no work shall be executed by the Executive Officer by way of enforcing the said notice until the expiration of a fortnight from the date on which the estimate was so supplied.

(2) Within a period of seven days from the said date, the person on whom the notice was served may apply in writing to have his objections to the execution of the work or to the estimated cost of the work determined by the Corporation;

and, if such application be made within the said period, no work shall be executed under section 510, by way of enforcing the said notice, until the Corporation have disposed of such objections.

*Recovery of expenses.*

Power to Corporation to accept agreement for payment of expenses in instalments

**514.** Whenever under this Act or under any rule or by-law made thereunder the expenses of any work executed or of any measure taken or thing done by, or under the order of, the Corporation, any Magistrate or any municipal officer empowered under section 12 in this behalf, are payable by any person, the Corporation may, if they think fit, instead of recovering any such expenses in any other manner provided in this Act or in any rule or by-law made thereunder, take an agreement from the said person to pay the same in instalments of such amounts and at such intervals as will secure the payment of the whole amount due, with interest thereon at the rate of not less than six *per centum per annum*, within a period of not more than six years.

*(Part IX.—Chapter XXXVII.—Procedure.—Sections 515—518.)*

Power to Corporation to declare certain expenses to be improvement expenses

**515.** (*1*) If any expenses to be recovered have been incurred or are to be incurred in respect of any work mentioned—

(*a*) in section 258, section 260, section 263, sub-section (*1*), section 271, section 278, section 317, section 347, section 399 or section 400, sub-section (*1*), clause (*b*), or rule 5 of Schedule XIV, or rule 7 of Schedule XVIII, or

(*b*) in any rule or by-law made under this Act by which this section is made applicable to such expenses,

the Corporation may, if they think fit, declare such expenses to be improvement expenses.

(*2*) A register shall be maintained by the Corporation showing all expenses declared to be improvement expenses under this section, and such register shall be open to inspection by any person upon payment of such fee as may from time to time be prescribed by the Corporation.

Improvement expenses how recoverable and by whom payable

**516.** (*1*) Improvement expenses, as declared under section 515, shall be a charge on the premises in respect of which or for the benefit of which the same have been incurred, and shall be recoverable in instalments of such amounts, and at such intervals, as will suffice to discharge such expenses, together with interest thereon at the rate of not less than six *per centum per annum*, within such period, not exceeding thirty years, as the Corporation may in each case determine.

(*2*) The said instalments shall be payable by the owner or occupier of the premises on which the expenses are so charged:

Provided that when the occupier pays any such instalment he shall, subject to any agreement to the contrary between the owner and the occupier, be entitled to deduct the amount thereof from the rent payable by him to the owner or to recover the same from the owner in any Court of competent jurisdiction.

Right of owner or occupier to redeem charge for improvement expenses

**517.** At any time before the expiration of the period for the payment of any improvement expenses, the owner or occupier of the premises on which the expenses are charged may redeem such charge by paying to the Corporation such part of the said expenses as are still payable.

Execution of work by occupier in default of owner, and deduction of expenses from rent.

**518.** Whenever the owner of any land or building fails to execute any work which he is required to execute under this Act or under any rule or by-law made thereunder, the occupier (if any) of such land or building may, with the approval of the Executive Officer, execute the said work, and he shall, subject to any agreement to the contrary between the owner and the occupier, be entitled to recover from the owner the reasonable expenses incurred by him in so doing and may deduct the amount thereof from the rent payable by him to the owner.

*(Part IX.—Chapter XXXVII.—Procedure.—Sections 519—522.)*

Relief to receivers, agents and trustees

**519.** (*1*) Whenever any person, by reason of his—

(*a*) receiving the rent of immovable property as a receiver, agent or trustee, or

(*b*) being as a receiver, agent or trustee the person who would receive the rent if the property were let to a tenant,

would, under this Act or under any rule or by-law made thereunder, be bound to discharge any obligation imposed thereby on the owner of the property and for the discharge of which money is required, and such person has not in his hands funds belonging or payable to the owner sufficient for the purpose,

he shall, within a reasonable time from the service upon him of any notice from the Corporation or any municipal officer empowered under section 12 in this behalf requiring him to discharge the said obligation, be bound to apply to a Court of competent jurisdiction for leave to raise the necessary funds or for such other directions in relation thereto as the circumstances of the case may require.

(*2*) Any receiver, agent or trustee who fails to apply to the Court under sub-section (*1*) shall be deemed to be personally liable to discharge the said obligation.

*Payment of compensation*

General power to Corporation to pay compensation

**520.** In any case not otherwise expressly provided for in this Act or in any rule or by-law made thereunder, the Corporation may pay compensation to any person who sustains damage by reason of the exercise of any of the powers vested by this Act, or by any such rule or by-law, in the Corporation or in any municipal officer or servant.

Compensation to be paid by offenders for damage caused by them

**521.** (*1*) Any person who has been convicted of an offence against this Act or against any rule or by-law made thereunder shall, notwithstanding any punishment to which he may have been sentenced for the said offence, be liable to pay such compensation for any damage to any property of the Corporation resulting from the said offence as the Corporation may consider reasonable.

(*2*) In the event of dispute regarding the amount of compensation payable under sub-section (*1*), such amount shall, on application made to him, be determined by the Magistrate before whom the said person was convicted of the said offence; and, on non-payment of the amount of compensation so determined, the same shall be recovered under a warrant from the said Magistrate as if it were a fine inflicted by him on the person liable therefor.

*Recovery of expenses or compensation in case of dispute.*

Reference by Corporation to Small Cause Court in certain cases

**522.** (*1*) If, when the Corporation demand payment of any expenses referred to in section 511, their right to demand the same or the amount of the demand is disputed, the Corporation shall refer the

case for the determination of the Court of Small Causes having local jurisdiction, or if the amount involved exceeds two thousand rupees, to the High Court.

(2) The Corporation shall, pending the decision on any such reference, defer further proceedings for the recovery of the sum claimed by them, and shall, after the decision, proceed to recover only such amount (if any) as is thereby declared to be due.

Application to Small Cause Court in other cases.

**523.** (1) Where, in any case not provided for by section 522, the Corporation are, or any municipal officer or servant or any other person is, required by this Act or by any rule or by-law made thereunder to pay any expenses or any compensation, the amount to be so paid and, if necessary, the apportionment of the same, shall, in case of dispute, be determined by the Court of Small Causes having local jurisdiction, or by the High Court, as the case may be, on application being made to it for this purpose at any time within one year from the date when such expenses or compensation first became claimable.

(2) This section shall not apply to any case which is otherwise provided for in section 421, sub-section (3), section 521, sub-section (2), or section 535, sub-section (2), or in the Land Acquisition Act, 1894, as amended by section 475 of this Act. I of 1894

Recovery of sums ascertained under section 523 to be due

**524.** If the amount of any expenses or compensation determined in accordance with section 523 is not paid on demand by the person liable to pay the same, it shall be recoverable as if the same were due under a decree of the Court of Small Causes.

Power to sue for expenses or compensation

**525.** Instead of proceeding in any manner hereinbefore prescribed for the recovery of any expenses or compensation of which the amount due has been ascertained as hereinbefore provided, or after such proceedings have been taken unsuccessfully or with only partial success, the Corporation or any other person claiming the sum due or the balance of the sum due, as the case may be, may recover such amount by suit brought in any Court of competent jurisdiction against the person liable for the same.

*Recovery of certain dues.*

Recovery of certain dues by distress and sale.

**526.** In any case not expressly provided for in this Act or in any rule or by-law made thereunder, any sum due to the Corporation on account of any charge, costs, expenses, fees, rates or rent or on any other account under this Act or under any such rule or by-law shall be recoverable by distress and sale of the movable property of the person from whom such sum is due, in the manner provided by Chapter XVI.

*Obstruction of owner by occupier.*

Application to Small Cause Court by owner when occupier prevents his complying with Act, etc.

**527.** (1) The owner of any land or building may, if he is prevented by the occupier thereof from complying with any provision of this Act or of any

rule or by-law made thereunder, or with any requisition made under any such provision in respect of such land or building, apply to the Court of Small Causes having local jurisdiction.

(*2*) The Court, on receipt of any such application, may make a written order requiring the occupier of the land or building to afford all reasonable facilities to the owner for complying with the said provision or requisition, and may also, if it thinks fit, direct that the costs of such application and order be paid by the occupier.

(*3*) After eight days from the date of any such order, the said occupier shall afford all such reasonable facilities to the owner for the purpose aforesaid as may be prescribed in the said order; and, in the event of his continued refusal to do so, the owner shall be discharged, during the continuance of such refusal, from any liability which he would otherwise incur by reason of his failure to comply with the said provision or requisition

*Proceedings before Court of Small Causes*

General powers and procedure of Small Cause Courts

**528.** (*1*) Whenever under this Act or under any rule made thereunder, any application, appeal or reference is made to a Court of Small Causes, the said Court may, for the purposes of any inquiry or proceeding in connection with such application, appeal or reference, summon and enforce the attendance of witnesses and compel them to give evidence and compel the production of documents by the same means and, as far as is possible, in the same manner as is provided by the Presidency Small Cause Courts Act, 1882, or the Provincial Small Cause Courts Act, 1887, as the case may be, XV of 1882. IX of 1887.

and, in all matters relating to any such inquiry or proceeding, the said Court shall be guided generally by the provisions of the said Presidency Small Cause Courts Act, or of the said Provincial Small Cause Courts Act, as the case may be, so far as the same are applicable.

(*2*) If, in any such inquiry or proceeding, the person against whom the complaint or application has been made fails to appear, notwithstanding that he has been duly summoned for this purpose, the said Court may hear and determine the case in his absence.

(*3*) The costs of every such inquiry or proceeding, as determined by the said Court, shall be payable by such parties and in such proportions as the said Court may direct, and the amount thereof shall, if necessary, be recoverable as if the same were due under a decree of the said Court.

Fees in proceedings before Small Cause Courts.

**529.** (*1*) The Local Government may, by notification in the *Calcutta Gazette*, prescribe what fee (if any) shall be paid—

(*a*) on any application, appeal or reference made under this Act to a Court of Small Causes; and

*(Part IX.—Chapter XXXVII.—Procedure.—Sections 530, 531.)*

(*b*) for the issue, in connection with any inquiry or proceeding of any such Court under this Act, of any summons or other process:

Provided that the fees (if any) prescribed under clause (*a*) shall not, in cases in which the value of the claim or subject-matter is capable of being estimated in money, exceed the fees leviable, for the time being, under the provisions of the Presidency Small Cause Courts Act, 1882, or the Provincial Small Cause Courts Act, 1887, as the case may be, in cases in which the value of the claim or subject-matter is of like amount.

XV of 1882
IX of 1887

(*2*) The Local Government may, by a like notification, determine by what person any fee prescribed under clause (*a*) of sub-section (*1*) shall be payable.

(*3*) No application, appeal or reference shall be received by any Court of Small Causes until the fee (if any) prescribed therefor under clause (*a*) of sub-section (*1*) has been paid:

Provided that the said Court may, in any case, in which it thinks fit so to do,—

(*i*) receive an application, appeal or reference made by or on behalf of a poor person, and

(*n*) issue process on behalf of any such person,

without payment or on part payment of the fees prescribed under this section

Repayment of half-fees on settlement before hearing

**530.** Whenever any application, appeal or reference made under this Act to a Court of Small Causes, is settled by agreement of the parties before the hearing, half the amount of all fees paid up to that time shall be repaid by the said Court to the parties by whom the same have respectively been paid

*Proceedings before Magistrates*

Municipal Magistrates.

**531.** (*1*) The Local Government may appoint one or more Magistrates for the trial of offences against—

(*a*) this Act, and

(*b*) the rules or by-laws made thereunder,

and may prescribe the times and places at which such Magistrate or Magistrates shall sit for the despatch of business.

(*2*) Such Magistrates shall be called Municipal Magistrates, and shall, if they are stipendiary, be paid such salary, pension and leave-allowances by the Local Government as may from time to time be fixed by the Local Government.

(*3*) The Corporation shall, out of the Municipal Fund, pay to the Local Government the amounts of the salary, pension and leave-allowances as fixed under sub-section (*2*), together with the cost of the

*(Part IX.—Chapter XXXVII.—Procedure.—Sections 532—534.)*

establishments of the said Magistrates, and all other incidental charges in connection with such establishments.

(*4*) Each such Magistrate shall have jurisdiction over the whole of Calcutta.

Cognizance of offences

**532.** All offences against this Act or against any rule or by-law made thereunder, whether committed in or without Calcutta, shall be cognizable by any Magistrate having jurisdiction in Calcutta; and such Magistrate shall not be deemed to be incapable of taking cognizance of any such offence or of any offence against any enactment hereby repealed by reason only of his being—

(*a*) liable to pay any municipal rate or other tax, or

(*b*) benefited by the Municipal Fund to the credit of which any fine imposed by him shall be payable.

Power to Magistrate to hear case in absence of accused when summoned to appear

**533.** If any person summoned to appear before a Magistrate to answer a charge of an offence against this Act or against any rule or by-law made thereunder fails to appear at the time and place mentioned in the summons, the Magistrate may, if—

(*a*) service of the summons is proved to his satisfaction, and

(*b*) no sufficient cause is shown for the non-appearance of such person,

hear and determine the case in his absence.

Limitation of time for prosecution

**534.** (*1*) No person shall be liable to punishment for any offence against this Act or against any rule or by-law made thereunder, unless complaint of such offence is made before a Magistrate within three months, or, if the offence be against the provisions of section 136, within six months, next after—

(*a*) the date of the commission of such offence, or,

(*b*) if such date is not known or the offence is continuous in its nature, the date on which the commission or existence of such offence was first brought to the notice of the Corporation or the Executive Officer.

(*2*) Failure to take out a license under this Act shall be deemed, for the purposes of sub-section (*1*), to be a continuing offence until the expiration of the period for which the license is required to be taken out.

(*3*) When, before the expiration of the period of limitation prescribed by sub-section (*1*) for a prosecution for failure to comply with a requisition made by the Corporation under sections 343, 344 or 346, a notice under section 359, sub-section (*1*), has been sent to the Corporation by any person to whom such requisition has been addressed, a fresh period of limitation of three months for such prosecution shall be computed from the expiration of the period of six months or more referred to in section 359, sub-section (*3*).

*(Part IX.—Chapter XXXVII.—Procedure.—Sections 535—538.)*

Complaints concerning nuisances, and procedure thereupon

**535.** (*1*) The Corporation, or any person who resides or owns property in Calcutta, may complain to a Magistrate of the existence of any nuisance.

(*2*) Upon receipt of any such complaint, the Magistrate, after making such inquiry as he thinks necessary, may, if he sees fit, by written order direct the Corporation—

(*a*) to put in force any of the provisions of this Act or of the rules or by-laws made thereunder, or to take such measures as to such Magistrate may seem practicable and reasonable for preventing, abating, diminishing or remedying such nuisance;

(*b*) to recover the expenses of so doing from any person specified in this behalf in such order; and

(*c*) to pay to the complainant such reasonable costs of and relating to the said complaint and order as the said Magistrate shall determine, inclusive of compensation for the complainant's loss of time in prosecuting such complaint.

Power to Magistrate to direct demolition and payment of fine in respect of unlawful work

**536.** When under this Act or under any rule or by-law made thereunder any person is liable, in respect of any unlawful work,—

(*a*) to pay a fine, and

(*b*) to be required to demolish the work,

a Magistrate may, in his discretion and subject to the provisions of sections 363, 364 and 493, direct the said person to pay the fine and also to demolish the work.

*Legal proceedings.*

Power to Corporation to institute, etc., legal proceedings and obtain legal advice

**537.** The Corporation may—

(*a*) institute, defend or withdraw from legal proceedings under this Act or under any rule or by-law made thereunder;

(*b*) compound any offence against this Act or against any rule or by-law made thereunder which, under any enactment for the time being in force, may lawfully be compounded;

(*c*) admit, compromise or withdraw any claim made under this Act or under any rule or by-law made thereunder; and

(*d*) obtain such legal advice and assistance as they may from time to time think it necessary or expedient to obtain, for any of the purposes referred to in the foregoing clauses of this section, or for securing the lawful exercise or discharge of any power or duty vesting in or imposed upon the Corporation or any municipal officer or servant.

Notice, limitation and tender of amends in suit against the Corporation etc.

**538.** (*1*) No suit shall be instituted against the Corporation or any municipal officer or servant, or any person acting under the direction of the Corporation or any municipal officer or servant in respect of any

act purporting to be done under this Act or under any rule or by-law made thereunder, until the expiration of one month next after written notice has been delivered or left at the municipal office or the residence of such officer, servant or person, stating—

(*a*) the cause of action,

(*b*) the name and residence of the intending plaintiff, and

(*c*) the relief which he claims.

(*2*) Every such suit shall be commenced within four months next after the accrual of the cause of action, and the plaint therein shall contain a statement that a notice has been delivered or left as required by sub-section (*1*).

(*3*) If the Corporation or any person to whom any notice is given under sub-section (*1*), tender sufficient amends to the plaintiff before the suit is instituted, the suit shall be dismissed.

(*4*) If no such tender be made, the Corporation or such person may pay into Court such sum of money as they or he think fit, and thereupon such proceeding shall be had as in other cases in which defendants are allowed to pay money into Court.

(*5*) Nothing in the foregoing sub-sections shall apply to any suit instituted under section 54 of the Specific Relief Act, 1877. 1 of 1877

Indemnity to the Corporation, etc.

**539.** No suit shall be maintainable against the Corporation or any municipal officer or servant, or any person acting under the direction of the Corporation or any municipal officer or servant, or of a Magistrate, in respect of anything done lawfully and in good faith and with due care and attention under this Act or under any rule or by-law made thereunder.

# PART X.

## CHAPTER XXXVIII.

### SUPPLEMENTAL PROVISIONS.

*Extension of Act to Howrah and to other municipalities in the neighbourhood of Calcutta.*

Power to Local Government to notify intention to extend Act to Howrah or other neighbouring municipality

**540.** The Local Government may, by notification published in the *Calcutta Gazette* and in such other manner as they may determine, declare their intention to extend to the Municipality of Howrah or to any other municipality in the neighbourhood of Calcutta, or to any part thereof, subject to the modifications and restrictions (if any) specified in such notification, all or any portions of this Act which do not already apply thereto.

Power to Local Government to extend Act after considering objections

**541.** (*1*) The Commissioners of the Municipality of Howrah or of such other neighbouring municipality as may be specified in a notification published under section 540, or any inhabitants or rate-payers thereof, may, if they object to the declaration contained therein, submit their objection in writing to the Local Government within such period as may be specified in this behalf in the said notification; and the Local Government shall take such objections into consideration.

(*2*) When the said period has expired, and the Local Government have considered the objections (if any) which have been submitted under sub-section (*1*), the Local Government may, by notification in the *Calcutta Gazette*, extend to the Municipality of Howrah or to the said neighbouring municipality, or to the part thereof specified in the said notification, as the case may be, all or any of the portions of this Act which were specified in that notification, subject to the modifications and restrictions (if any) specified therein or subject to such other modifications or restrictions (if any) as the Local Government may think fit, or without modification or restriction of any kind.

Effect of extension of Act

**542.** If all or any portions of this Act which do not already apply to the Municipality of Howrah or to any other municipality in the neighbourhood of Calcutta be extended to such municipality, or to any part thereof, under section 541, then—

(*a*) the Bengal Municipal Act, 1884, or the corresponding portions of that Act, as the case may be, shall be repealed in the said municipality or part on and from the date of such extension; and, Ben Act III of 1884.

(*b*) except as the Local Government may otherwise by notification in the *Calcutta Gazette* direct, all rules, by-laws, orders, directions and powers made, issued or conferred under the portions of this Act which have been so extended and in force at the date of such extension, shall apply to the said municipality or part, in supersession of all corresponding rules, by-laws, orders, directions and powers made, issued or conferred under the said Bengal Municipal Act, 1884.

*Explanation.*—The extension to the Municipality of Howrah or to any other municipality in the neighbourhood of Calcutta, or to any part

*(Part X.—Chapter XXXVIII.—Supplemental provisions.—Sections 543, 544.)*

thereof, of any portion of this Act shall not have the effect of placing the said municipality or part under the authority of the Corporation of Calcutta

*Inclusion of areas in the neighbourhood of Calcutta within Calcutta.*

Power to Local Government to include certain areas within Calcutta

**543.** (*1*) The Local Government may, by notification published in the *Calcutta Gazette* and in such other manner as they may determine, declare their intention to include any specified area in the neighbourhood of Calcutta within the limits of Calcutta, to be administered by the Corporation under this Act.

(*2*) The local authority having jurisdiction in the said area or any of the inhabitants thereof, may, if they object to such declaration, submit their objection in writing to the Local Government within such period as may be specified in this behalf in the said notification; and the Local Government shall take such objections into consideration.

(*3*) When the said period has expired and the Local Government have considered the objections (if any) which have been submitted under sub-section (*2*), and if the Bengal Legislative Council has by a resolution recommended the extension, with or without modifications, the Local Government may issue the notification including such area or any portion thereof within the limits of Calcutta, to be administered by the Corporation under this Act, and such notification shall thereafter be of full force and effect, and Schedule I to this Act shall be deemed to be amended accordingly.

Effect of inclusion

**544.** (*1*) When the said area is included within the limits of Calcutta, under section 543, then—

(*a*) the Bengal Municipal Act, 1884, or the Bengal Local Self-Government Act of 1885 or the Bengal Village Self-Government Act, 1919, as the case may be, if in force in such area, shall be deemed to be repealed therein; and

Ben. Act III of 1884. Ben. Act III of 1885. Ben. Act V of 1919.

(*b*) except as the Local Government may otherwise, by notification in the *Calcutta Gazette* direct, all rules, by-laws, regulations, orders, directions and powers made, issued or conferred under this Act and in force at the date of inclusion shall apply to the said area, in supersession of all corresponding

*(Part X.—Chapter XXXVIII.—Supplemental provisions.—Sections 545, 546).*

rules, by-laws, regulations, orders, directions and powers (if any) made, issued or conferred under the Bengal Municipal Act, 1884, the Bengal Local Self-Government Act of 1885, or the Bengal Village Self-Government Act, 1919, as the case may be.

Ben Act III of 1884. Ben Act III of 1885 Ben Act V of 1919

(2) The Local Government may issue such orders as may be necessary to give effect to the inclusion of the said area and any matters incidental or ancillary thereto.

*Police.*

Co-operation of the Police

**545.** (1) The Commissioner of Police and his subordinates shall—

(a) co-operate with the Corporation for carrying into effect and enforcing the provisions of this Act and for maintaining good order in Calcutta, and,

(b) on the order of a Magistrate, assist the Corporation or any municipal officer or servant in carrying out any order made by a Magistrate under this Act.

(2) It shall be the duty of every police-officer in Calcutta—

(i) to communicate without delay to the proper municipal officer any information which he receives of a design to commit or of the commission of any offence against this Act or against any rule or by-law made thereunder, and

(ii) to assist any municipal officer or servant reasonably demanding his aid for the lawful exercise of any power vesting in the Corporation or in such municipal officer or servant under this Act or under any such rule or by-law.

(3) On the recommendation of the Corporation, any officer or servant of the Corporation, when empowered in that behalf by a general or special order of the Commissioner of Police, may exercise the powers of a police-officer for such of the purposes of this Act as may be specified in such order.

Power to police to arrest offenders.

**546.** (1) It shall be the duty of every police-officer to arrest any person who commits, in his view, any offence against this Act or against any rule or by-law made thereunder, if the name and address of such person be unknown to him, and if such person, on demand, declines to give his name and address or gives a name or address which such officer has reason to believe to be false.

*(Part X.—Chapter XXXVIII.—Supplemental provisions.—Sections 547—549.)*

(2) No person so arrested shall be detained in custody after his true name and address are ascertained or, without the order of a Magistrate, for any longer time (not exceeding at the most twenty-four hours from the arrest) than is necessary for bringing him before a Magistrate.

(3) On the written application of the Executive Officer, the Deputy Executive Officer, the Chief Engineer, the City Architect or the Health Officer, any police-officer above the rank of constable shall arrest any person who obstructs any municipal officer or servant in the exercise of any of the powers conferred by this Act or by any rule or by-law made thereunder.

*Special provisions as to land and buildings in Hastings.*

Control by General Officer Commanding the Presidency District over Government land and buildings

**547.** Notwithstanding anything contained in this Act, all land and buildings belonging to the Government in that part of Hastings which is included in Calcutta shall be subject to the control of the General Officer Commanding the Presidency District:

Provided that this section shall in no way derogate from the powers vested in the Corporation under Chapters XVII and XVIII and any other provision of this Act enabling them in the interests of the public health to require the owner or occupier of any land or building in such part of Hastings to remedy or abate any sanitary defect on or in such land or building.

Sanction of Government of India required to erection of masonry building

**548.** The Corporation shall not give or be deemed to have given permission to erect a masonry building in that part of Hastings which is included in Calcutta unless and until the sanction of the Government of India has been obtained; and such sanction shall not be applied for unless the plan of the building and the site-plan of the land are approved by the Commissioner of Police.

Demolition or alteration of buildings erected without such sanction

**549.** (1) If the erection of any masonry new building in that part of Hastings which is included in Calcutta is, after the commencement of this Act, commenced, carried on or completed without obtaining the sanction of the Government of India, the Executive Officer shall, if requested by the General Officer Commanding the Presidency District to do so,—

(a) by written notice direct the owner to demolish or alter the building, or

(b) himself cause the building to be demolished or altered at the expense of the owner.

*(Part X.—Chapter XXXVIII.—Supplemental provisions.—Sections 550—553.)*

(2) No person shall be entitled to any compensation on account of such demolition or alteration.

Provisions of sections 548 and 549 not to bar other provisions of the Act

**550.** Notwithstanding anything contained in sections 548 and 549, permission to erect a masonry building in that part of Hastings which is included in Calcutta shall not be given so as to contravene, by rendering less strict, any of the provisions of this Act regulating the construction of buildings; and the provisions of section 549 shall be in addition to, and not in derogation of, any other powers of the Corporation under this Act to take proceedings for the demolition of any masonry new building erected in such part of Hastings after the commencement of this Act.

*Water-supply, sewers and gas mains.*

Preparation and maintenance of map in regard to water supply system

**551.** (1) The Corporation shall prepare and maintain a map showing the position of water mains and other particulars of the water-supply system generally, sewers, gas mains, telephone and electric cables and such other details as may be prescribed by the Local Government by rules under this Act.

(2) Such map shall be open for inspection by the public, and copies thereof shall be supplied by the Corporation to the public, at such cost as may from time to time be fixed by the Corporation.

(3) Every public company which lays down underground mains and cables shall contribute towards the cost of preparation and maintenance of the said map, such proportionate amount as may be prescribed by the Local Government by rules under this Act.

*General provisions.*

Power to authority to require any one or more of a number of things to be done

**552.** Where a power is expressed as being conferred on any authority to require a person to do a number of things, that authority may from time to time in its discretion require that person to do any one or more of those things.

Who to be deemed owner or occupier, where there are gradations of owners or occupiers.

**553.** Whenever any right is conferred or duty imposed by or under this Act, or by any rule or by-law made thereunder, on the owner or occupier of any premises, and, in consequence of there being gradations of owners or occupiers, doubt arises as to who is the owner or occupier entitled to exercise such right or bound to perform such duty, the Corporation may, after due inquiry, determine from time to time

*(Part X.—Chapter XXXVIII.—Supplemental provisions—Sections 554—557.)*

which of such owners or occupiers shall be deemed to be so entitled or bound.

Provided that if the name of any one of such owners or occupiers has been entered in the assessment-book in pursuance of any decision given by the Executive Officer under section 144, sub-section (2), such owner or occupier shall be deemed to be so entitled or bound until his name is duly removed from the said assessment-book.

Councillors, Aldermen, municipal officers, etc., to be deemed public servants

**554.** Every Councillor and Alderman, every municipal officer and servant, every contractor or agent for the collection of any municipal rate or other tax or fee and every servant or other person employed by any such contractor or agent, shall be deemed to be a public servant within the meaning of section 21 of the Indian Penal Code. XLV of 1860.

Prohibition of obstruction of municipal contractors

**555.** No person shall obstruct or molest any person (not being a person referred to in section 554) with whom the Mayor has entered into a contract on behalf of the Corporation, in the performance or execution by such person of his duty or of anything which he is empowered or required to do by virtue, or in consequence of, this Act or any rule or by-law made thereunder

Prohibition of removal of mark

**556.** No person shall remove any mark set up for the purpose of indicating any level, measurement or direction necessary to the execution of works authorized by this Act or by any rule or by-law made thereunder

*Construction of references and savings.*

Construction of references in other enactments

**557.** (1) In every enactment in force at the commencement of this Act, unless a different intention appears,—

(a) all references to the Chairman of the Corporation of Calcutta shall be construed as references to the Executive Officer,

(b) all references to the Vice-Chairman of the said Corporation shall be construed as references to the Deputy Executive Officer,

(c) all references to the Commissioners of the said Corporation shall be construed as references to the Councillors and Aldermen referred to in section 5, and

(d) all references to, or to any chapter or section of the Calcutta Municipal Act, 1899, shall, so far as is possible, be construed as references to this Act or to its corresponding chapter or section. Ben Act III of 1899.

*(Part X.—Chapter XXXVIII.—Supplement provisions.—Section 558.)*

(2) The references to the General Committee in section 56, sub-section (1) and section 65, sub-sections (1), (2) and (3) of the Calcutta Improvement Act, 1911, shall be construed as references to the Corporation. Ben Act V of 1911.

Saving of prior enactments

**558.** Except as in this Act otherwise expressly provided, nothing in this Act shall be deemed to affect the provisions of any other enactment.

## SCHEDULE I.

### "CALCUTTA."

[*See section 3, clause (11), and sections 483 and 543.*]

"Calcutta" is the area included within the following boundaries except that it does not include :—

(*1*) Fort William,

(*2*) the Esplanade, or

(*3*) that part of Hastings north of the south edge of Clyde Row and Strand Road to the river bank.

*Boundaries*

A line drawn along the outer edge of Paramanik Ghat Road, Cossipur Road, Kasi Nath Dutt Road, Kali Charan Ghose Road and Ramkrishna Ghose Lane: thence southward along the western edge of the Eastern Bengal Railway to the point where the boundary line meets the New Canal, thence eastward along the southern bank of the New Canal to the point where it meets the Baliaghatta Canal, thence westward along the southern bank of the Baliaghatta Canal to the point where it meets Pagladanga Road; thence along the northern and eastern edge of Pagladanga Road to the point where it meets Chingrighatta Road; thence along the southern edge of Chingrighatta Road to the point where it meets Tangra Road, South; thence along the eastern and southern edge of Tangra Road, South, to the point where it meets Topsia Road, North; thence along the eastern and southern edge of Topsia Road, North, to the point where it meets Hughes Road; thence along the eastern edge of Hughes Road to the point where the Town and Suburban High Level Sewers meet; thence along the southern edge of the new road to the point where it meets Topsia Road, South; thence along the southern edge of Topsia Road, South, to the point where it meets Tiljala Masjidbari Lane; thence along the eastern and southern edge of Tiljala Masjidbari Lane to Tiljala Road, formerly known as Maulvi Ahmad Khan Bahadur's Road; thence westward along a line drawn in continuation of the southern edge of Tiljala Masjidbari Lane to the Eastern Bengal Railway line; thence southward along the western edge of the line of that Railway, and westward along the northern edge of the Budge-Budge Branch of that Railway, to Russa Road, South; thence southward along the eastern edge of Russa Road, South, to the point where it meets Tollyganj Circular Road; thence along the southern boundary of Tollyganj Circular Road to the point where it meets the southern boundary of the Port Commissioners' land acquired for the purpose of constructing King George's Dock and its connected works, and thence along the southern boundary of the Port Commissioners' land above referred to, as it stands at the commencement of this Act up to the point where it meets Diamond Harbour Road; thence along the eastern boundary of Diamond Harbour Road, to the point where it meets the southern boundary of the Port Commissioners' land above referred to; thence along the southern and western boundary of the said

*(SCHEDULE I—Calcutta.)*

land up to the point where it meets the village Singarhatty; thence along the northern border of villages Belpukuria, Ramdashutty, Makalhutty and Kismat Dum Dum till it meets the Government embankment; and thence westward along the Government embankment till it meets the River Hooghly; thence along the River Hooghly to the western terminus of the outer edge of the Paramanik Ghat Road.

## SCHEDULE II.

### CORRUPT PRACTICES.

[*See sections 3 (17), 22 (3), 46 and 47.*]

The following shall be deemed to be corrupt practices for the purposes of this Act :—

### PART I.

Bribery

**1.** A gift, offer or promise by a candidate or his agent, or by any other person with the connivance of a candidate or his agent, of any gratification to any person whomsoever, with the object, directly or indirectly, of inducing—

(*a*) a person to stand or not to stand as, or to withdraw from being, a candidate, or

(*b*) an elector to vote or refrain from voting at an election,

or as a reward to—

(*a*) a person for having so stood or not stood or for having withdrawn his candidature, or

(*b*) an elector for having voted or refrained from voting.

*Explanation*.—For the purposes of this clause the term "gratification" is not restricted to pecuniary gratifications or gratifications estimable in money, and includes all forms of entertainment and all forms of employment for reward ; but it does not include the payment of any expenses *bonâ fide* incurred at or for the purposes of any election and duly entered in the return of election expenses prescribed by this Act

Undue influence

**2.** (*1*) Any direct or indirect interference or attempt to interfere on the part of a candidate or his agent, or of any other person with the connivance of the candidate or his agent, by any of the means hereafter specified, with the right of any person to stand or not to stand or to withdraw from standing as a candidate, or with the free exercise of the franchise of an elector.

(*2*) The means above alluded to are—

(*a*) any violence, injury, restraint, or fraud and any threat thereof ;

(*b*) any threat to a person or inducement to a person to believe that he or any person in whom he is interested will become or be rendered an object of divine displeasure or spiritual censure ;

Personation.

but do not include any declaration of public policy or promise of public action.

**3.** The procuring or abetting or attempting to procure by a candidate or his agent, or by any other person with the connivance of a candidate or his agent, the application by a person for a voting paper in the name of any other person, whether living or dead, or in a fictitious name, or by a person who has voted once at an election for a voting paper in his own name at the same election.

*(Schedule II.—Corrupt practices.)*

Publication of false statements.

**4.** The publication by a candidate or his agent, or by any other person with the connivance of the candidate or his agent, of any statement of fact which is false and which he either believes to be false or does not believe to be true in relation to the personal character or conduct of any candidate or in relation to the candidature or withdrawal of any candidate, which statement is reasonably calculated to prejudice such candidate's election.

## PART II.

Acts under Part I.

**1.** Any act specified in Part I, when done by a person who is not a candidate or his agent or a person acting with the connivance of a candidate or his agent.

Personation

**2.** The application by a person at an election for a voting paper in the name of any other person, whether living or dead, or in a fictitious name, or for a voting paper in his own name after he has already voted at such election.

Receipt of gratification

**3.** The receipt of, or agreement to receive, any gratification, whether as a motive or a reward,—

(*a*) by a person to stand or not to stand as, or to withdraw from being, a candidate; or

(*b*) by any person whomsoever for himself or any other person for voting or refraining from voting, or for inducing or attempting to induce any elector to vote or refrain from voting or any candidate to withdraw his candidature.

Payment for conveyance

**4.** Any payment or promise of payment to any person on account of the conveyance of any elector to or from any place for the purpose of recording his vote:

Provided that nothing contained in these rules shall prevent a conveyance being hired by an elector, or by several electors at their joint cost, for the purpose of conveying him or them to or from the poll

Incurring expense without authority

**5.** The incurring or authorization of expenses by any person other than a candidate or his election agent on account of holding any public meeting or upon any advertisement, circular or publication or in any other way whatsoever for the purpose of promoting or procuring the election of such candidate, unless he is authorized in writing so to do by the candidate.

Hiring of liquor shops.

**6.** The hiring, using or letting, as a committee-room or for the purpose of any meeting to which electors are admitted, of any building, room or other place where intoxicating liquor is sold to the public.

Issue of circulars, etc., without printer's and publisher's name printed thereon.

**7.** The issuing of any circular, placard or poster having reference to the election which does not bear on its face the name and address of the printer and publisher thereof.

## SCHEDULE III.

### LIST OF CONSTITUENCIES.

*(See sections 8, 20, 23, 45, 49, 50 and 51.)*

[NOTE—*This schedule will come into force at the fourth of the general elections held under, or in the manner provided in, this Act*]

| Name of constituency | Extent of constituency. | Number of Councillors to be elected. | Number of seats included in column 3 reserved for Muhammadans |
|---|---|---|---|
| 1 | 2 | 3 | 4 |
| *A.—General Constituencies.* | | | |
| Shampukur .. | Ward No 1 ... | Two | |
| Kumartuli ... | Ward No 2 .. | One | |
| Bartola ... | Ward No. 3 ... | Two | |
| Sukeas Street ... | Ward No 4 ... | Two | |
| Jorabagan . | Ward No. 5 ... | Two | |
| Jorasanko ... | Ward No 6 ... | Two | |
| Bara Bazar .. | Ward No 7 ... | Three | |
| Collootola ... | Ward No 8 ... | Four ... | Two |
| Muchipara ... | Ward No 9 ... | Three ... | One. |
| Bow Bazar ... | Ward No 10 ... | Two ... | One |
| Puddapukur ... | Ward No 11 ... | One | |
| Waterloo Street ... | Ward No 12 ... | One | |
| Fenwick Bazar ... | Ward No 13 ... | One | |
| Taltola ... ... | Ward No 14 ... | Two ... | One. |
| Kalinga ... ... | Ward No 15 .. | One | |
| Park Street ... | Ward No 16 ... | One. | |
| Bamun Bustee ... | Ward No 17 .. | One. | |
| Tangra ... ... | Ward No 18 ... | One | |
| Entally ... .. | Ward No. 19 ... | Two ... | One. |
| Beniapukur ... | Ward No. 20 ... | Two ... | One |
| Ballyganj ... | Ward No. 21 ... | Two ... | One |
| Bhowanipur .. | Ward No 22 ... | Three | |
| Alipur ... ... | Ward No 23 ... | One. | |
| Ekbalpur ... | Ward No. 24 ... | Two ... | One. |
| Watganj and Hastings | Ward No. 25 ... | Two ... | One. |
| Garden Reach ... | Ward No 26 ... | Four ... | Two |
| Tollyganj ... | Ward No. 27 ... | One | |
| Beliaghatta ... | Ward No 28 ... | Three ... | One |
| Maniktala ... | Ward No 29 ... | Two ... | One. |
| Belgachia ... | Ward No. 30 .. | Two | |
| Satpukur ... | Ward No. 31 ... | Two | |
| Cossipur ... | Ward No 32 ... | Three . | One |

(*Schedule III.—List of Constituencies.*)

| Name of constituency | Extent of constituency | Number of Councillors to be elected. | Number of seats included in column 3 reserved for Muhammadans |
|---|---|---|---|
| 1 | 2 | 3 | 4 |
| | *B.—Special Constituencies* | | |
| Bengal Chamber of Commerce. | Non-territorial ... | Six. | |
| Calcutta Trades Association. | Non-territorial ... | Four. | |
| Calcutta Port Commissioners. | Non-territorial ... | Two | |

## SCHEDULE IV.

### LIST OF CONSTITUENCIES.

*(See sections 8, 20, 23, 45, 49, 50 and 51.)*

[*This Schedule will remain in force in respect of all elections held prior to the fourth of the general elections held under, or in the manner provided in, this Act*]

| Name of constituency | Extent of constituency | Number of Councillors to be elected |
|---|---|---|
| 1 | 2 | 3 |
| *A.—Non-Muhammadan Constituencies.* | | |
| Shampukur ... ... | Ward No 1 ... | Two. |
| Kumartuli ... ... | Ward No 2 .. | Two |
| Bartola ... ... | Ward No 3 ... | Two |
| Sukeas Street .. ... | Ward No 4 ... | Two |
| Jorabagan ... ... | Ward No 5 ... | Two |
| Jorasanko ... ... | Ward No 6 .. | Two |
| Bara Bazar ... ... | Ward No 7 ... | Three |
| Colloetola ... ... | Ward No 8 .. | Two |
| Machipara ... ... | Ward No 9 ... | Two. |
| Bowbazar ... ... | Ward No 10 ... | One |
| Puddapukur ... ... | Ward No 11 ... | One |
| Waterloo Street ... ... | Ward No 12 ... | One |
| Fenwick Bazar ... ... | Ward No 13 ... | One |
| Taltola ... ... | Ward No 14 | One |
| Kalinga ... ... | Ward No 15 ... | One |
| Park Street ... ... | Ward No. 16 ... | One |
| Bamun Bustee ... ... | Ward No 17 ... | One |
| Tangra ... .. | Ward No 18 ... | One |
| Entally .. ... | Ward No 19 ... | One |
| Bennapukur ... ... | Ward No 20 .. | One. |
| Ballyganj ... ... | Ward No 21 ... | One |
| Bhowanipur ... ... | Ward No 22 ... | Three. |
| Alipur ... ... | Ward No 23 ... | One |
| Ekbalpur ... ... | Ward No 24 ... | One. |
| Watganj and Hastings ... | Ward No 25 .. | One |
| Garden Reach ... ... | Ward No. 26 ... | Two. |
| Tollyganj ... ... | Ward No 27 ... | One |
| Baliaghata ... ... | Ward No 28 ... | Two. |
| Maniktala ... ... | Ward No 29 ... | One. |
| Belgachia ... ... | Ward No 30 .. | Two. |
| Satpukur ... ... | Ward No. 31 ... | One |
| Cossipur ... ... | Ward No 32 ... | Two |

*(Schedule IV.—List of constituencies.)*

| Name of constituency | Extent of constituency. | Number of Councillors to be elected |
|---|---|---|
| 1 | 2 | 3 |
| ***B.—Muhammadan Constituencies*** | | |
| **Muhammadan constituency No. I—** | | |
| Shampukur ... | Ward No. 1 ... | One |
| Kumartuli ... | Ward No. 2 ... | |
| Bartola ... | Ward No. 3 ... | |
| Sukeas Street ... | Ward No. 4 ... | |
| Jorabagan ... | Ward No. 5 ... | |
| Jorasanko ... | Ward No. 6 ... | |
| Bara Bazar ... | Ward No. 7 ... | |
| **Muhammadan constituency No. II—** | | |
| Colootola .. | Ward No. 8 .. | Four |
| Muchipara ... | Ward No. 9 ... | |
| Bowbazar ... | Ward No. 10 ... | |
| Puddapukur ... | Ward No. 11 ... | |
| Waterloo Street ... | Ward No. 12 ... | |
| **Muhammadan constituency No. III—** | | |
| Fenwick Bazar ... | Ward No. 13 ... | Two. |
| Taltola ... ... | Ward No. 14 .. | |
| Kalinga ... ... | Ward No. 15 ... | |
| Park Street ... | Ward No. 16 ... | |
| Bamun Bustee ... | Ward No. 17 ... | |
| Tangra ... ... | Ward No. 18 ... | |
| Entally ... ... | Ward No. 19 ... | |
| Beniapukur ... ... | Ward No. 20 ... | |
| **Muhammadan constituency, No. IV—** | | |
| Ballyganj ... | Ward No. 21 ... | Three. |
| Bhowanipur ... | Ward No. 22 ... | |
| Alipur ... | Ward No. 23 ... | |
| Ekbalpur ... | Ward No. 24 ... | |
| Watganj and Hastings ... | Ward No. 25 ... | |
| Tollyganj ... | Ward No. 27 ... | |
| **Muhammadan constituency No. V—** | | |
| Beliaghata ... | Ward No. 28 ... | Two |
| Maniktala ... | Ward No. 29 ... | |

(*Schedule IV.—List of constituencies.*)

| Name of constituency. | Extent of constituency | Number of Councillors to be elected |
|---|---|---|
| 1 | 2 | 3 |
| ***B —Muhammadan Constituencies—concld*** | | |
| Muhammadan constituency No VI— | | |
| Belgachia ... ... | Ward No 30 ... | One. |
| Satpukur ... ... | Ward No 31 ... | |
| Cossipur ... | Ward No 32 .. | |
| Muhammadan constituency No VII— | | |
| Garden Reach ... | Ward No 26 .. | Two |
| ***C —Special Constituencies.*** | | |
| Bengal Chamber of Commerce ... | Non-territorial ... | Six. |
| Calcutta Trades Association ... | Non-territorial ... | Four |
| Calcutta Port Commissioners ... | Non-territorial ... | Two. |

## SCHEDULE V.

*(See section 34.)*

### RETURN OF ELECTION EXPENSES.

**1.** Under the head of receipts there shall be shown the name and description of every person (including the candidate), club, society or association from whom any money, security or equivalent of money was received in respect of expenses incurred on account of, or in connection with, or incidental to, the election, and the amount received from each person, club, society or association separately.

**2.** Under the head of expenditure, there shall be shown :—

(*a*) the personal expenditure of the candidate incurred or paid by him or his election agent, including travelling and all other personal expenses incurred in connection with his candidature ;

(*b*) the name, and the rate and total amount of the pay, of each person employed as an agent (including the election agent), clerk or messenger ;

(*c*) the travelling expenses and any other expenses incurred by the candidate or his election agent on account of agents (including the election agent), clerks or messengers ;

(*d*) the travelling expenses of persons, acting on behalf of the candidate, whether in receipt of salary or not, incurred in connection with the candidature, and whether paid or incurred by the candidate, his election agent or the person so travelling ;

(*e*) the cost whether paid or incurred of—

(*i*) printing,

(*ii*) advertising,

(*iii*) stationery,

(*iv*) postage,

(*v*) telegrams,

(*vi*) rooms hired either for public meetings or as committee-rooms, and

(*vii*) conveyances hired for taking electors to the polls ;

(*f*) any other miscellaneous expenses whether paid or incurred.

NOTE.—(1) All expenses incurred in connection with the candidature, whether paid by the candidate, his election agent, or any other person, or remaining unpaid on the date of the return are to be set out

(2) For all items of Rs 5 and over, unless from the nature of the case (*e.g.* travel by the rail or postage) a receipt is not obtainable, vouchers are to be attached

(3) All sums paid but for which no receipt is attached are to be set out in detail with dates of payment

(4) All sums unpaid are to be set out in a separate list

(*Schedule V.—Return of election expenses.*)

**3.** The form of affidavit referred to in section 34 shall be as follows:—

*Affidavit.*

I being the appointed election agent for a candidate for election in the constituency (*or* I being a candidate for election in the constituency), do hereby solemnly affirm that the above return of election expenses is true to the best of my knowledge and belief, and that, except the expenses herein set forth, no expenses of any nature whatsoever have to my knowledge and belief been incurred in, and for the purposes of, ——— 's candidature / my candidature ———.

(Sd.)

*Election agent or candidate.*

Solemnly affirmed before me.

(*Magistrate.*)

## SCHEDULE VI.

### RULES AS TO LICENSES FOR THE EXERCISE OR CARRYING ON OF PROFESSIONS, TRADES AND CALLINGS.

*(See sections 20, 175, 176, 177 and 211.)*

Classes of licenses and tax on each

**1.** Every license shall be granted under one or other of the classes mentioned in the second column of the following table, and there shall be paid annually for the same the fee mentioned in that behalf in the third column of that table:—

| 1 | 2 | | 3 |
|---|---|---|---|
| Serial No | Classes | | Fees |
| | CLASS I | | |
| 1 | Company or association or body of individuals, the paid up capital of which is equivalent to twenty lakhs of rupees or upwards | which exercises or carries on any profession, trade or calling whatsoever. | Five hundred rupees |
| | CLASS II | | |
| 2 | Company or association or body of individuals, the paid-up capital of which is equivalent to ten lakhs of rupees or upwards, | which exercises or carries on any profession, trade or calling whatsoever but is not included in Class I | Two hundred and fifty rupees |
| | CLASS III. | | |
| 3 | Merchant, banker, wholesale trader, commission agent, engineer, architect, builder, contractor, auctioneer or carrier, | the rent of whose place of business is valued under Chapter X at Rs. 1,000 *per mensem* or upwards | Two hundred rupees |
| 4 | Taxi-cab owner, having twenty or more taxi-cabs. | .... | Ditto |
| | CLASS IV. | | |
| 5 | Company or association or body of individuals, the paid-up capital of which is equivalent to one lakh of rupees or upwards, | which exercises or carries on any profession, trade or calling whatsoever but is not included in Class I or Class II | One hundred rupees |
| 6 | Merchant, banker, wholesale trader, commission agent, engineer, architect, builder, contractor, auctioneer or carrier, | who is not included in Class III and the rent of whose place of business is valued under Chapter X at Rs. 350 *per mensem* or upwards. | Ditto |
| 7 | Owner or occupier of a cotton, jute, hide or other screw-house or press-house, | the rent of whose place of business is valued under Chapter X at Rs 350 *per mensem* or upwards. | Ditto |

*(Schedule VI.—Rules as to licenses for the exercise or carrying on of professions, trades and callings.—Rule 1.)*

| 1 | 2 | | 3 |
|---|---|---|---|
| Serial No. | Classes. | | Fees. |
| | CLASS IV—*concld.* | | |
| 8 | Owner or occupier of a market, *bazar* or theatre or a place of public entertainment kept up for the purpose of profit, | the rent of whose place of business is valued under Chapter X at Rs 350 *per mensem* or upwards | One hundred rupees. |
| 9 | Printer, publisher, lithographer, engraver, die sinker, photographer or phototyper, | Ditto ... | Ditto |
| 10 | Proprietor of a newspaper, periodical or journal, | Ditto ... | Ditto |
| 11 | Hotel-keeper, boarding-house keeper, lodging-house keeper, manufacturer, retail trader or shop-keeper, | Ditto ... | Ditto |
| 12 | Bookmaker or turf accountant | ..... | Ditto |
| 13 | Keeper of a shop for the sale of any liquor or intoxicating drug | ..... | Ditto |
| 14 | Taxi-cab owner, having ten or more, but less than twenty taxi-cabs | ... .. | Ditto |
| 15 | Stevedores. ... ... | ..... | Ditto |
| | CLASS V | | |
| 16 | Company or association or body of individuals, the paid-up capital of which is less than one lakh of rupees, | which exercises or carries on any profession, trade or calling whatsoever | Fifty rupees. |
| 17 | Consulting and practising physician, practising surgeon, licentiate of medicine or surgery, *kabiraj*, graduate of the Bengal Veterinary College, midwife, dentist, barrister, attorney, *vakil* of the High Court, proctor, notary public, public accountant, average adjuster, statistical reporter, analyst, *shroff* or *banian*, | in respect of whose income income-tax is payable. | Ditto |
| 18 | Merchant, Banker, wholesale trader, commission agent, engineer, architect, builder, contractor, auctioneer or carrier, | who is not included in Class III or Class IV. | Ditto |
| 19 | Broker or *dalal* employed in the wholesale transfer or purchase of imports or exports, country produce, silk or other merchandise. | . ... | Ditto. |
| 20 | Commercial traveller. ... | ..... | Ditto. |
| 21 | Dealer in precious stones.* ... | ..... | Ditto |
| 22 | Broker or dealer in houses, landed property, Government securities, shares or bills of exchange | ..... | Ditto |

*(Schedule VI.—Rules as to licenses for the exercise or carrying on of professions, trades and callings.—Rule 1.)*

| 1 | 2 | | 3 |
|---|---|---|---|
| Serial No. | Classes. | | Fee |
| | CLASS V—*concld.* | | |
| 23 | Freight broker ... | ..... | Fifty rupees. |
| 24 | Owner or occupier of a market, *bazar* or theatre, or a place of public entertainment kept up for the purpose of profit, | who is not included in Class IV. | Ditto. |
| 25 | Owner or occupier of a wholesale tobacco, jute or other depôt, | whose place of business is valued under Chapter X at Rs 100 *per mensem* or upwards. | Ditto |
| 26 | Proprietor of a newspaper, periodical or journal, | who is not included in Class IV and the rent of whose place of business is valued under Chapter X at Rs. 100 *per mensem* or upwards. | Ditto |
| 27 | Printer, publisher, lithographer, engraver, die-sinker, photo grapher or phototyper, | Ditto ... | Ditto. |
| 28 | Owner or occupier of a cotton, jute, hide or other screw house or press-house, | Ditto ... | Ditto. |
| 29 | Hotel-keeper, boarding-house-keeper, lodging-house-keeper, manufacturer, retail trader or shop-keeper, | Ditto ... | Ditto |
| 30 | Order-supplier or house decorator, | the rent of whose place of business is valued under Chapter X at Rs. 100 *per mensem* or upwards. | Ditto. |
| 31 | Taxi-cab owner, having five or more, but less than ten taxi-cabs. | ..... | Ditto. |
| 32 | Owner of a steam ferry-boat or steam cargo-boat | ..... | Ditto. |
| 33 | Pawnbroker or money-lender | ..... | Ditto. |
| 34 | Plumber, electric fitter or gas-fitter, | the rent of whose place of business is valued under Chapter X at Rs 100 *per mensem* or upwards. | Ditto. |
| 35 | Pleader, ... ... | in respect of whose income income-tax is payable. | Ditto. |

*(Schedule VI.—Rules as to licenses for the exercise or carrying on of professions, trades and callings.—Rule 1.)*

| 1 | 2 | | 3 |
|---|---|---|---|
| Serial No | Classes. | | Fees |
| | Class VI | | |
| 36 | Consulting and practising physician, practising surgeon, licentiate of medicine or surgery, *kabiraj*, graduate of the Bengal Veterinary College, midwife, dentist, barrister, attorney, *vakil* of the High Court, proctor, notary public, public accountant, average adjuster, statistical reporter, analyst, *shroff* or *baman*, | by whom no income-tax is payable | Twenty-five rupees |
| 37 | Insurance agent, broker or canvasser | .. .. | Ditto. |
| 38 | Purchaser of goods in Calcutta for transport and sale beyond the limits of Calcutta | . | Ditto |
| 39 | Broker in precious stones .. | ... .. | Ditto |
| 40 | Surveyor (including a licensed building surveyor) or professional measurer | ..... | Ditto |
| 41 | Practising apothecary, or practising veterinary surgeon | ... . | Ditto |
| 42 | Keeper of a billiard room ... | ... .. | Ditto. |
| 43 | Owner or occupier of a whole sale tobacco, jute or other depôt, | who is not included in Class V, and the rent of whose place of business is valued under Chapter X at Rs 30 *per mensem* or upwards | Ditto |
| 44 | Pleader, | by whom no income-tax is payable | Ditto |
| 45 | Printer, publisher, lithographer, engraver, die-sinker, photographer or phototyper, | who is not included in Class IV or Class V, and the rent of whose place of business is valued under Chapter X at Rs. 30 *per mensem* or upwards. | Ditto |
| 46 | Dyer or cleaner, | the rent of whose place of business is valued under Chapter X at Rs 30 *per mensem* or upwards | Ditto. |
| 47 | Owner or occupier of a cotton, jute, hide or other screw-house or press-house, | who is not included in Class IV or Class V, and the rent of whose place of business is valued under Chapter X at Rs. 30 *per mensem* or upwards | Ditto. |

*(Schedule VI.—Rules as to licenses for the exercise or carrying on of professions, trades and callings.—Rule 1.)*

| 1 | 2 | | 3 |
|---|---|---|---|
| Serial No. | Classes | | Fees |
| | Class VI—*concld* | | |
| 48 | Hotel-keeper, boarding-house-keeper, lodging-house-keeper, manufacturer, retail trader or shop-keeper, | who is not included in Class IV or Class V, and the rent of whose place of business is valued under Chapter X at Rs 30 *per mensem* or upwards | Twenty-five rupees |
| 49 | Order supplier or house decorator, | who is not included in Class V, and the rent of whose place of business is valued under Chapter X at Rs 30 *per mensem* or upwards | Ditto |
| 50 | Keeper of baths, | the rent of whose place of business is valued under Chapter X at Rs 30 *per mensem* or upwards | Ditto |
| 51 | Taxi-cab owner, having less than five taxi-cabs | .... | Ditto |
| 52 | Plumber, electric fitter or gas-fitter, | who is not included in Class V, and the rent of whose place of business is valued under Chapter X at Rs 30 *per mensem* or upwards | Ditto |
| 53 | Carriage dealer or horse-dealer, | the rent of whose place of business is valued under Chapter X at Rs. 30 *per mensem* or upwards | Ditto |
| 54 | Proprietor of a periodical or journal, | who is not included in Class IV or Class V, and the rent of whose place of business is valued under Chapter X at Rs 30 *per mensem* or upwards | Ditto |
| 55 | Private detective | ..... | Ditto |
| 56 | Professional astrologer. ... | ..... | |
| 57 | *Poddar* or money-changer, ... | the rent of whose place of business is valued under Chapter X at Rs 15 *per mensem* or upwards. | Ditto |
| 58 | Professional jockey or race-horse trainer. | ... .. | Ditto |
| | Class VII | | |
| 59 | Broker or *dalal*, ... | who is not included in Class V | Twelve rupees |
| 60 | *Mukhtear*. ... | ..... | Ditto. |
| 61 | Professional draftsman. ... | ..... | Ditto. |
| 62 | Professional artist, sculptor, actor, singer or musician. | ..... | Ditto. |

*(Schedule VI.—Rules as to licenses for the exercise or carrying on of professions, trades and callings.—Rule 1.)*

| 1 | | | 3 |
|---|---|---|---|
| Serial No. | Classes. | | Fees |
| | Class VII—*contd* | | |
| 63 | Fortune-teller. | .. .. | Twelve rupees |
| 64 | Keeper of a permanent stall in a daily market, | who is not included in any higher class | Ditto |
| 65 | Keeper of a shop within fifty yards of a daily market who is a seller of goods similar in kind to other goods sold in such market, | Ditto | Ditto. |
| 66 | *Poddar* or money-changer, | the rent of whose place of business is not less than Rs 5, but not more than Rs 15 | Ditto |
| 67 | Medical practitioner (whether registered under the Bengal Medical Act, 1914, or otherwise), practising apothecary, *hakim*, *kabiraj*, graduate of the Bengal Veterinary College, or midwife, | who is not included in Class VI and by whom no income-tax is payable | Ditto Ben Act VI of 1914 |
| 68 | Proprietor of a periodical or journal, | who is not included in Class IV, Class V or Class VI, and the rent of whose place of business is valued under Chapter X at Rs 10 *per mensem* or upwards | Ditto |
| 69 | Owner of a cargo-boat, | ... | Ditto |
| 70 | Professional horse-breaker ... | .. | Ditto |
| 71 | Labour-supplier, licensed shipping broker, boat-supplier or custom-house agent | ..... | Ditto |
| 72 | Printer, publisher, lithographer, engraver, die-sinker, photographer or phototyper, | who is not included in Class IV, Class V or Class VI, and the rent of whose place of business is valued under Chapter X at Rs. 15 *per mensem* or upwards | Ditto |
| 73 | Dyer or cleaner, ... ... | who is not included in Class VI, and the rent of whose place of business is valued under Chapter X at Rs 15 *per mensem* or upwards. | Ditto. |
| 74 | Hotel-keeper, boarding-house-keeper, lodging-house-keeper, manufacturer, retail trader or shop-keeper, | who is not included in Class IV, Class V or Class VI, and the rent of whose place of business is valued under Chapter X at Rs 15 *per mensem* or upwards. | Ditto |
| 75 | Order supplier or house decorator, | who is not included in Class V or Class VI, and the rent of whose place of business is valued under Chapter X at Rs. 15 *per mensem* or upwards. | Ditto |

*(Schedule VI.—Rules as to licenses for the exercise or carrying on of professions, trades and callings.—Rule 2.)*

| 1 | 2 | | 3 |
|---|---|---|---|
| Serial No | Classes | | Fees. |
| | Class VII—*concld* | | |
| 76 | Plumber, electric-fitter or gas-fitter, | who is not included in Class V or Class VI, and the rent of whose place of business is valued under Chapter X at Rs 15 *per mensem* or upwards | Twelve rupees |
| 77 | Carriage-dealer or horse-dealer, | who is not included in Class VI and the rent of whose place of business is valued under Chapter X at Rs. 15 *per mensem* or upwards | Ditto |
| 78 | Owner of any carriage, passenger-boat or palanquin which is let out for hire, | the rent of whose place of business is valued under Chapter X at Rs 15 *per mensem* or upwards | Ditto |
| 79 | Band supplier or stamp-vendor, | Ditto ... | Ditto |
| | CLASS VIII | | |
| 80 | Keeper of a shop or other place of business, | who is not included in any other class | Four rupees. |
| 81 | Pedlar, vendor of goods in carts, hawker or *box wallah*, | who is not included in Class IX | Ditto |
| 82 | Professional petition, letter or bill-writer | ..... | Ditto |
| | CLASS IX. | | |
| 83 | Itinerant dealer hawking goods for sale in a basket or tray | ..... | One rupee. |

Licenses to be either personal or local

**2.** (*1*) Licenses shall be either personal or local.

(*2*) "Personal license" means a license which is not a local license, and includes a license granted to a company or association or body of individuals.

(*3*) "Local license" means—

(*a*) a license the classification of which depends on the valuation of the place of business, and

(*b*) a license granted under Class IV, number 13, or Class V, number 32, or number 33, or Class VI, number 42, or number 43, or class VII, number 64, or number 69, or class VIII, number 80, in the table in rule 1.

*(Schedule VI.—Rules as to licenses for the exercise or carrying on of professions, trades and callings—Rules 3-7.)*

Personal license required for each separate profession, trade or calling

**3.** When any person carries on two or more professions, trades or callings which are separate or independent of one another and for each of which a personal license is required, he shall be liable to take out a personal license for each such profession, trade or calling:

Provided that, if, in the opinion of the Executive Officer, any such profession, trade or calling is auxiliary to the carrying on of one or more of such other professions, trades or callings, such person shall only be required to take out a license under the highest of the two or more classes in the table in rule 1 under which his liability accrues

Personal license for members of firms

**4.** When two or more persons carry on business jointly, they may take out a single license as a firm.

Provided that, if any of the partners of such firm exercises or carries on any separate profession, trade or calling on his own account or jointly with other partners, a separate license shall be taken out in respect of every such profession, trade or calling.

Local license required for each business

**5.** A separate local license shall be taken out in respect of the business carried on in each separate place of business:

Provided that—

(*a*) separate licenses shall not be required in respect of any business carried on in adjacent premises which form one place of business or in any yards, godowns or factories which are auxiliary to any place of business; and

(*b*) the amount of the valuation of such premises, yards, godowns or factories shall be included in the computation for determining the class under which the license shall be taken out.

Valuation of places of business not separately valued under Chapter X

**6.** When a place of business occupies only a portion of one set of premises and has not been separately valued under Chapter X, the valuation thereof for the purposes of these rules shall be the rate *per mensem* at which such place of business might, in the opinion of the Executive Officer, reasonably be expected to let.

When both personal and local license required.

**7.** When any person exercises or carries on a profession, trade or calling for which a personal license should under these rules be taken out, and is also the owner or occupier of a place of business for which a local license should be taken out, he shall, if the Corporation so direct, take out both a personal license and a local license:

Provided that, where the place of business is auxiliary to the exercise or carrying on of the profession, trade or calling, only one license shall be required, and such license shall be either personal or local as the Corporation may direct.

*(Schedule VI.—Rules as to licenses for the exercise or carrying on of professions, trades and callings —Rules 8-12.)*

Occupier ordinarily to be licensee

**8.** Where the owner or occupier of any place of business is required to take out a license, the license shall be taken out by the occupier if the business is carried on by the occupier, but otherwise by the owner.

Annual list of licensees

**9.** (*1*) As soon as may be after the first day of April in every year, the Executive Officer shall prepare a list of the companies, associations, bodies and persons licensed for the next preceding year.

(*2*) Such list shall contain the particulars specified in section 498, sub-section (*1*), and shall be kept at the municipal office and be open to public inspection at all reasonable times.

Continuance of liability in same class

**10.** Any person who has taken out a license for the next preceding year, or has been fined under section 492 for not taking out a license during that year, shall, subject to the other provisions of these rules, be presumed, unless he proves to the contrary, to be liable and entitled to take out a license for the current year under the class in which he was included for such preceding year.

Time for presentation of applications for remissions, etc

**11.** (*1*) Any person who claims a remission or refund of a license fee under proviso (*a*) to section 175, in respect of any year, shall present an application to the Corporation before the first day of September in the next following year.

(*2*) Any person who—

(*i*) has taken out a license for the next preceding year or has been fined under section 492 for not taking out a license during that year, and,

(*ii*) in consequence of any change in his profession, trade, calling or place of business, or for any other reason, claims an exemption or declaration under proviso (*b*) or proviso (*c*) to section 175,

shall present an application to the Corporation before the first day of September in the current year.

Power to Executive Officer to issue notices to take out licenses, etc

**12.** (*1*) If the Executive Officer considers—

(*a*) that any person who has not taken out a license in the next preceding year ought to take out a license, or

(*b*) that any person who has taken out a license for such year, but has not done so for the current year, ought to take out a license under a higher class, or to take out more than one license,

he may serve such person with a notice directing him to take out a license or licenses for the next preceding year or the current year, as the case may be, under such class or classes as may to the Executive Officer seem proper.

*(Schedule VI.—Rules as to licenses for the exercise or carrying on of professions, trades and callings.—Rules 13-17.)*

(2) If the Executive Officer considers that any person who has taken out a license for the current year ought to have taken out a license under a higher class, he may serve such person with a notice directing him forthwith to take out a license under such higher class for that year.

Provided that when such license under a higher class has been taken out, the amount paid in respect of the license in the lower class shall, unless such person is liable to take out both licenses, be refunded to him.

Executive Officer to prove liability when service of notice not proved

**13.** When any person is summoned for not taking out a license, and service of notice under rule 12, sub-rule (*1*), is not proved, it shall be incumbent on the Executive Officer to prove that the person so summoned is liable to take out a license, and to state the class under which he is so liable.

Appeal to Bench or to Court of Small Causes.

**14.** Any person dissatisfied with an order made under this schedule may appeal either –

(*a*) to a Bench consisting of not less than three Councillors or Aldermen to be elected by the Corporation ; or

(*b*) to a Court of Small Causes having jurisdiction in the place in which the profession, trade or calling is alleged to be exercised or carried on :

Provided that no appeal shall lie under this rule unless the amount payable for the license, as assessed in accordance with the said notice, has been deposited with the Corporation :

Provided also that where an assessee has taken out a license for the next preceding year, the sum to be deposited under the first proviso to this rule shall not exceed the amount which he paid in such year.

Statement by appellant

**15.** Any person who is desirous of appealing under rule 14 shall, within thirty days of the passing of the order or the service of the notice, referred to in that rule, submit to the Secretary to the Corporation a petition setting forth the grounds of appeal,

and the petitioner shall intimate whether he intends to appeal to the Bench under clause (*a*), or to a Court of Small Causes under clause (*b*), of rule 14 ;

Provided that no appeal shall be made to a Court of Small Causes under rule 14 until the expiration of a period of one month from the submission of a petition under this rule.

Procedure of Court in appeal.

**16.** When an appeal is made under these rules to a Court of Small Causes, the Court may follow the procedure prescribed in section 528, and the order of the said Court shall be final.

Finality of order of Corporation or Executive Officer when no appeal.

**17.** When no appeal is preferred under these rules, the order of the Corporation or the Executive Officer, as the case may be, shall be final.

## SCHEDULE VII.

### WARDS FOR PURPOSES OF VALUATION.

*(See section 131.)*

| Serial number of Ward. | Name of Ward | Boundaries of Ward— On the north | On the south. | On the east. | On the west. |
|---|---|---|---|---|---|
| 1 | 2 | 3 | 4 | 5 | 6 |
| 1 | Shampukur ... | The Circular Canal | Ultadingi Road and Grey Street | The Circular Canal and Upper Circular Road | Upper Chitpur Road and the Chitpur Bridge Approach. |
| 2 | Kumartuli ... | The River Hooghly | Nimtala Ghat Street and the road leading to Nimtala Ghat | Upper Chitpur Road and the Chitpur Bridge Approach. | The River Hooghly. |
| 3 | Bartola ... | Grey Street and Ultadingi Road | Beadon Street and Manuktala Road. | The Circular Canal | Upper Chitpur Road and Upper Circular Road. |
| 4 | Sukeas Street | Beadon Street and Manuktala Road | Machua Bazar Street and Gas Street. | The Circular Canal and Upper Circular Road | Cornwallis Street. |
| 5 | Jorabagan ... | Nimtala Ghat Street and the road leading to Nimtala Ghat | Cotton Street and Mirbahar Ghat Street | Upper Chitpur Road. | The River Hooghly. |
| 6 | Jorasanko .. | Beadon Street ... | Machua Bazar Street | Cornwallis Street | Upper Chitpur Road |
| 7 | Bara Bazar ... | Mirbahar Ghat Street and Cotton Street | Lal Bazar Street, Dalhousie Square, North, Fairlie Place and a line drawn in continuation of Fairlie Place to the river bank. | Lower Chitpur Road. | The River Hooghly |
| 8 | Colootola ... | Machua Bazar Street | Bow Bazar Street | College Street ... | Lower Chitpur Road. |
| 9 | Muchipara ... | Machua Bazar Street and Gas Street. | Bow Bazar Street and Bahaghatta Road including the new diversion. | The Circular Canal | College Street. |
| 10 | Bow Bazar ... | Bow Bazar Street | Dharamtala Street | Wellington Street | Bentinck Street. |
| 11 | Paddapukur ... | Ditto ... | Ditto ... | Lower Circular Road. | Wellington Street. |
| 12 | Waterloo Street | Lal Bazar Street, Dalhousie Square, North, Fairlie Place and a line drawn in continuation of Fairlie Place to the river bank. | Esplanade, East, Lawrence Road and Esplanade, West | Bentinck Street | The River Hooghly. |
| 13 | Fenwick Bazar | Dharamtala Street | Kyd Street and Ripon Street. | Wellesley Street | Chowringhee Road and part of Free School Street |

*(Schedule VII.—Wards for purposes of valuation.)*

| Serial number of Ward. | Name of Ward. | Boundaries of Ward— On the north. | On the south. | On the east. | On the west. |
|---|---|---|---|---|---|
| 1 | 2 | 3 | 4 | 5 | 6 |
| 14 | Taltala ... | Dharamtala Street | Ripon Street .. | Lower Circular Road. | Wellesley Street |
| 15 | Kalinga ... | Ripon Street ... | Theatre Road ... | Ditto ... | Wellesley Street and Wood Street. |
| 16 | Park Street ... | Kyd Street and Ripon Street | Ditto ... | Wood Street and Wellesley Street | Chowringhee Road |
| 17 | Bamun Bustee | Theatre Road ... | Lower Circular Road | Lower Circular Road | Ditto |
| 18 | Tangra ... | Baliaghatta Canal and Pagladanga Road | Tiljala Road and Topsia Road South | Pagladanga Road, Chingrihatta Road, Tangra Road, South, Topsia Road, North, Hughes Road, and the new road connecting Hughes Road and Topsia Road, South, where the Town and Suburban High Level Sewers meet. | Kakurgachi Chord and the Eastern Bengal Railway |
| 19 | Entally ... | Baliaghatta Road, including the new diversion and the Circular and Baliaghatta Canals | Beniapukur Road, Phulbagan Road, South Road and Christopher Road. | Kakurgachi Chord and the Eastern Bengal Railway | Lower Circular Road. |
| 20 | Beniapukur ... | Beniapukur Road, Phulbagan Road, South Road and Christopher Road | The Calcutta Improvement Trust new 100 ft. road running from Beckbagan Lane and Lower Circular Road corner and meeting the Park Circus, the new 100 ft. Calcutta Improvement Trust Road from the Park Circus meeting Darga Road, and in its continuation, the new 60 ft. Calcutta Improvement Trust Road to the Eastern Bengal Railway. | Ditto ... | Ditto |

*(Schedule VII.—Wards for purposes of valuation.)*

| Serial number of Ward. | Name of Ward. | BOUNDARIES OF WARD— | | | |
|---|---|---|---|---|---|
| | | On the north | On the south. | On the east. | On the west. |
| 1 | 2 | 3 | 4 | 5 | 6 |
| 21 | Ballygunj . | Lower Circular Road, the Calcutta Improvement Trust new 100 ft. road running from Beckbagan Lane and Lower Circular Road Corner and meeting the Park Circus, the new 100 ft Calcutta Improvement Trust Road from the Park Circus meeting Darga Road and, in its continuation, the new 60 ft Calcutta Improvement Trust Road from Darga Road to the Eastern Bengal Railway, thence along Tiljala Road to the point where it meets Topsia Road, South. | Hazra Road, Bondel Road and a line drawn straight from the Eastern Bengal Railway to the southern edge of Tiljala Masjidbari Lane, and the southern edge of Tiljala Masjidbari Lane | Topsia Road, South, Tiljala Masjidbari Lane and the Eastern Bengal Railway line | Lansdowne Road |
| 22 | Bhowanipur ... | Lower Circular Road | Hazra Road, Nepal Bhattacharji Street to Tolly's Nullah | Lansdowne Road and Russa Road, South | Tolly's Nullah and Zeerut Bridge Approach |
| 23 | Alipur . | Tolly's Nullah ... | Tollygunj Circular Road and the southern boundary of the land acquired by the Port Commissioners for the Dock extension as existing at the time of the commencement of the Act up to the point where it meets Diamond Harbour Road | Tolly's Nullah ... | Diamond Harbour Road and Kidderpore Bridge Approach |
| 24 | Ekbalpur ... | Circular Garden Reach Road. | Shahapur Road, Garagacha Road and Taratala Road. | Diamond Harbour Road. | Hide Road |
| 25 | Watgunj and Hastings. | Clyde Road, Strand Road and a line drawn in continuation of the south side of Strand Road to the river and the River Hooghly. | Circular Garden Reach Road and the southern edge of the line of old Taratala Road. | St. George's Gate Road, the Kidderpore Bridge approach and Hide Road. | The western edge of the line of old Taratala Road and a line in continuation thereof up to the River Hooghly. |

*(Schedule VII.—Wards for purposes of valuation.)*

| Serial number of Ward. | Name of Ward. | Boundaries of Ward— | | | |
|---|---|---|---|---|---|
| | | On the north | On the south. | On the east | On the west |
| 1 | 2 | 3 | 4 | 5 | 6 |
| 26 | Garden Reach | Shahapur Road, Goragacha Road, the southern edge of the line of old Taratala Road and the River Hooghly | The southern border of the land acquired by the Port Commissioners for the Dock extension as existing at the time of the commencement of the Act, westward along the northern border of villages Daulatpur, Krishnapur, Gongoa, Belpookaria, Ramdashutty, Makalhutty and Kismat Dum Dum till it meets the Government embankment. | Diamond Harbour Road, the western edge of the line of old Taratala Road and a line drawn in continuation thereof up to the River Hooghly | The western border of the land acquired by the Port Commissioners for the Dock extension as existing at the commencement of the Act up to the village Singerhutty, along the Government embankment till it meets the River Hooghly |
| 27 | Tollygunj . | Bondel Road, Hazra Road, Nepal Bhattacherjee Street to Tolly's Nullah | Tollygunj Circular Road and the Eastern Bengal Railway, Budge Budge Branch | Russa Road, South, and the Eastern Bengal Railway line | Russa Road, South, and Tolly's Nullah |
| 28 | Bahaghatta ... | Narikeldanga Main Road | Bahaghatta Canal | New Canal ... | Circular Canal |
| 29 | Maniktala ... | New Canal ... | Narikeldanga Main Road | New Canal ... | Ditto |
| 30 | Belgachia .. | Paikpara Road and Belgachia Road | The Circular Canal and the New Canal | Eastern Bengal Railway | Barrackpore Trunk Road |
| 31 | Satpukur ... | Kali Charan Ghose Road and Ram Krishna Ghose Lane | Paikpara Road and Belgachia Road | Ditto .. | Ditto. |
| 32 | Cossipur ... | Pramanick Ghat Road, Cossipur Road and Kasinath Dutt Road | Circular Canal . | Barrackpore Trunk Road | The River Hooghly |

## SCHEDULE VIII.

### TAX ON CARRIAGES AND ANIMALS.

(*See section 165.*)

| | | *Per* half-year. Rs | A | P |
|---|---|---|---|---|
| 1. | On every four-wheeled carriage propelled by mechanical power (other than electricity) not having less than four cylinders and in respect of which the product of the overall length of the carriage multiplied by the track exceeds 65 square feet | 30 | 0 | 0 |
| 2. | On every four-wheeled carriage propelled by mechanical power (other than electricity) not having less than four cylinders and in respect of which the product of the overall length of the carriage multiplied by the track exceed 45 square feet, but does not exceed 65 square feet ... ... | 24 | 0 | 0 |
| 3. | On every four wheeled carriage propelled by mechanical power (other than electricity) having less than four cylinders or in respect of which the product of the overall length of the carriage multiplied by the track does not exceed 45 square feet ... | 18 | 0 | 0 |
| 4 | On every four-wheeled carriage propelled by electricity and on every three-wheeled carriage propelled by electricity or other mechanical power .. | 18 | 0 | 0 |
| 5. | On every bicycle, tricycle, side-car, or similar vehicle propelled by mechanical power not included in class 1, class 2, class 3 or class 4 ... ... | 10 | 0 | 0 |
| 6. | On every four-wheeled carriage drawn by two horses | 12 | 0 | 0 |
| 7 | Where any person owns more than one carriage included in class 6, then on every such carriage after the first ... ... ... | 8 | 0 | 0 |
| 8 | On every four-wheeled carriage drawn by one horse, pony or mule, or a pair of ponies or mules under 13 hands ... ... ... ... | 6 | 0 | 0 |
| 9 | On every two-wheeled carriage drawn by one or more animals ... ... ... ... | 6 | 0 | 0 |
| 10. | On every *jinrickshaw* ... ... ... | 2 | 0 | 0 |
| 11. | On every horse (not being a race horse) ... | 6 | 0 | 0 |
| 12. | On every race horse ... ... ... | 24 | 0 | 0 |
| 13. | On every pony or mule of or over 13 hands ... | 6 | 0 | 0 |
| 14. | On every pony or mule under 13 hands .. | 2 | 0 | 0 |

# SCHEDULE IX.

## SCAVENGING-TAX.

*(See section 179.)*

PART I.—PERSONS BY WHOM THE TAX IS PAYABLE

| | |
|---|---|
| Hackney carriage owner. | Swineherd |
| Carter. | Shepherd |
| Milk-seller | Goatherd |
| Horse-dealer | Owner or occupier of a market. |
| Donkey owner | |

PART II.—RATES OF FEE FOR LICENSES

| | *Per* half year. | | |
|---|---|---|---|
| | Rs | A | P |
| For every horse ... ... .. .. | 6 | 0 | 0 |
| " " pony or mule of or over 13 hands | 4 | 0 | 0 |
| " " pony or mule under 13 hands ... ... | 3 | 0 | 0 |
| " " bull or buffalo used for drawing a cart | 1 | 8 | 0 |
| " " cow or buffalo kept by a milk-seller ... | 0 | 12 | 0 |
| " " donkey or swine ... ... .. | 0 | 12 | 0 |
| " " ten sheep or goats ... ... . | 3 | 0 | 0 |
| For every twelve cubic feet of offensive matter and rubbish, or part thereof, removed on an average daily from a market ... ... ... ... | 30 | 0 | 0 |

## SCHEDULE X.

### FORM OF NOTICE OF DEMAND.

[*See section* 206 (*1*) ]

To

A. B.

residing at

Take notice that the Corporation of Calcutta demand from you (*as owner or occupier) the sum of due from you on account of the consolidated rate (*or* tax, *as the case may be*) for (*here describe the premises on account of which the rate is leviable or the carriage, animal, profession, trade or calling on account of which the tax is payable*) for the quarter (*or* half-year, *or* year) commencing (*or* ending) on the day of ; and that if the said sum is not paid into the municipal office at or to an officer appointed to receive the same, or if sufficient cause for non-payment of the same is not shown to the satisfaction of the Chief Executive Officer within seven days from the service of this notice, a warrant of distress will be issued for the recovery of the same, with costs.

Dated this day of

(*Signed.*)

Executive Officer, Calcutta Corporation

* In the case of a demand on the occupier of any premises under section 199, state that notice of demand has been served upon the owner and that the sum due remains unpaid

## SCHEDULE XI.

### FORM OF WARRANT OF DISTRESS.

[*See sections 191 (1), 198 (1) and 210 (1).*]

To (*here insert the name of the officer charged with the execution of the warrant.*)

Whereas A. B., of , has not paid, or shown sufficient cause to my satisfaction for the non-payment of, the sum of due for the consolidated rate (*or* tax, *as the case may be*) for the quarter (*or* half-year *or* year) commencing (*or* ending) on the day of , although the said sum has been duly demanded in writing from the said A. B., and seven days have elapsed since the service of the notice of demand;

[*or* Whereas the proceeds of the sale of the movable property of A. B., of , distrained under a warrant dated , and sold under section 197, are not sufficient to cover the sum distrained for,

And whereas the sum of is still due from the said A. B.;]

[And whereas the said sum has been increased under section 208 (*or* section 209, *as the case may be*), to ,]

This is to direct you to distrain the movable property of the said A. B. (*or*, *as the case may be*, any movable property found on the premises in respect of which the said rate is due) to the amount of the said sum of and such further sum as may be sufficient to defray the costs of recovering the said amount, and if within seven days next after such distress the said sum shall not be paid, together with such further sum as shall be sufficient to defray the said costs, to sell the said movable property; and having paid and deducted out of the proceeds of the sale the said sum of and the costs of recovering the same, to return the surplus (if any) and if the same be demanded within three years from the date of the sale, to the person whom you shall find in possession of the said movable property.

If sufficient distress cannot be found of the movable property of the said A. B. (*or* on the said premises, *as the case may be*), you are to certify the same to me together with this warrant.

*Dated this day of*

(*Signed.*)

Executive Officer, Calcutta Corporation.

## SCHEDULE XII.

### TABLE OF FEES PAYABLE ON WARRANTS OF DISTRESS.

[See section [illegible].]

| Sum distrained for. | Fee. |
|---|---|
| | Rs. A. |
| Under 5 rupees .. ... ... | 0 4 |
| Rupees 5 and under Rs. 10 .. ... | 0 8 |
| „ 10 „ „ 15 ... ... | 0 12 |
| „ 15 „ „ 20 .. .. | 1 0 |
| „ 20 „ „ 25 .. . | 1 4 |
| „ 25 „ „ 30 ... .. | 1 8 |
| „ 30 „ „ 35 .. ... | 1 12 |
| „ 35 „ „ 40 ... .. | 2 0 |
| „ 40 „ „ 45 ... ... | 2 4 |
| „ 45 „ „ 50 ... ... | 2 8 |
| „ 50 „ „ 60 ... .. | 3 0 |
| „ 60 „ „ 80 ... .. | 3 12 |
| „ 80 „ „ 100 ... .. | 4 8 |
| Above 100 rupees ... ... .. | 5 0 |

The above fees are to include all expenses except when peons are kept in charge of property distrained in which case eight annas shall be paid daily for each peon so employed.

## SCHEDULE XIII.

### FORM OF NOTICE OF SALE.

To

A. B.

residing at

Take notice that I have this day seized the movable property specified in the inventory set out below for the sum of due for the consolidated rate (*or* tax, *as the case may be*) for the quarter (*or* half-year *or* year) commencing (*or* ending) on the day of ; and that, unless you pay into the municipal office at the amount due, together with the costs of recovery, within seven days from the date of this notice, the said property will be sold.

*Dated this day of*

(*Signature of the Officer executing the Warrant of Distress.*)

Inventory.

(*Here state particulars of the movable property seized.*)

## SCHEDULE XIV.

### RULES AS TO PRIVATE CONNECTIONS TO PREMISES

(*See sections 232, 240 and 488.*)

*Private connections to premises.*

Separate service-pipes for separate premises

**1.** (*1*) All premises connected with the filtered water-supply shall be provided with separate service-pipes from the Municipal main.

(*2*) In any case in which a service-pipe from a main is used for supplying filtered water to two or more premises, the Corporation may, by written notice, require the owners of such premises to lay down separate service-pipes for separate premises; and the expense of so doing shall be borne by all such owners in such proportion as may be determined by the Corporation.

(*3*) The Corporation shall not delegate to any municipal officer their power to make a requisition by written notice under sub-rule (*2*).

Separate stop-cocks and underground hydrants or taps for supply of unfiltered water to private premises

**2.** (*1*) In premises connected with the municipal water-supply, separate stop-cocks shall be provided by the owner for controlling the supply of unfiltered water for the purposes mentioned in clause (*i*) and clause (*ii*), respectively, of sub-section (*2*) of section 221.

(*2*) When unfiltered water is supplied for any of the purposes mentioned in clause (*ii*) of sub-section (*2*) of section 221, it shall be so supplied as to be capable of being drawn only from hydrants or taps fixed below the surface of the ground.

Outer stop-cocks

**3.** When any premises are about to be connected with the municipal mains, the Corporation may, by written notice, require the owner of the premises to fix a stop-cock in some position outside the premises which is accessible at all times from the nearest street.

Size of ferrules.

**4.** (*1*) Filtered or unfiltered water supplied under Chapter XVII to any premises shall be supplied according to the annual value of such premises, as determined under Chapter X, through a ferrule of the size prescribed therefor in the following table :—

| Annual value of premises as determined under Chapter X | Size of ferrule: Filtered water. | Size of ferrule: Unfiltered water. |
|---|---|---|
| From 1 to 599 rupees (both inclusive) ... | ½ inch | ½ inch |
| " 600 to 1,199 " " ... | ⅝ " | ⅝ " |
| " 1,200 to 2,399 " " ... | 7/16 " | ½ " |
| " 2,400 to 3,599 " " ... | ½ " | ⅝ " |
| 3,600 rupees or more ... ... | ⅝ " or 1 " | ⅝ " or 1 " |

Provided as follows :—

(*a*) the Local Government may, on the recommendation of the Corporation, substitute any other scale for the scale of ferrules prescribed in the said table;

*(Schedule XIV.—Rules as to private connections to premises and meters.—Rules 5-7.)*

(*b*) if any premises be so situated that the ferrule prescribed therefor in the said table or under proviso (*a*) is too small to pass, within a period of six hours, the daily supply of water to which the occupier of the premises is entitled under section 223, the Corporation shall permit the use of a larger ferrule for such premises.

(*2*) Where a ferrule used at the commencement of this Act for the supply of water to any premises is larger than that prescribed for such premises in sub-rule (*1*) or under proviso (*a*) to that sub-rule, as the case may be, the Corporation may, at the expense of the municipal fund and after giving one month's notice in writing to the owner of the premises, substitute for such ferrule one of the size so prescribed.

Construction of service-pipes, ferrules and works.

**5.** (*1*) The service-pipe for carrying water from the municipal mains into any premises, and the pipes, taps and works (other than ferrules) within such premises, shall be of such character, dimensions and materials as the Corporation may fix and approve, and shall be made and constructed at the expense of the person requiring the same.

(*2*) The said ferrules shall be of such character and material as the Corporation may fix and approve, and except as provided in rule 4, sub-rule (*2*), shall be affixed at the expense of the occupier of the premises.

(*3*) The said service-pipe, and all fittings thereon for carrying water from the municipal mains into any premises, and all ferrules, pipes, taps, works and fittings inside the premises, shall in all cases be executed subject to the inspection of the Corporation and to their satisfaction;

and the connection of premises with the municipal mains, and the laying of supply-pipes under any public street or thoroughfare, shall be executed in the presence of a municipal officer authorized in that behalf, and in no other way.

(*4*) Such service-pipe, fittings, ferrules, pipes, taps and works may be made by the servants and workmen of the Corporation upon such terms as may be agreed upon between the Corporation and the person requiring the water-supply, or subject to such charges as may be fixed by them;

and, when they are to be so made, the Corporation may require the cost thereof to be paid or deposited before the work is executed.

Power to Corporation to inspect premises

**6.** The Corporation may inspect any premises supplied with water under Chapter XVII in order to examine all pipes, taps, works and fittings connected with the supply of water, and to ascertain whether there is any waste or misuse of such water.

Replacing or alteration of fittings for supplying water

**7.** (*1*) If any pipes, taps, works or fittings connected with the supply of filtered or unfiltered water in any premises be found, on examination by the Corporation, to be defective, they may, by written

*(Schedule XIV.—Rules as to private connections to premises and meters.—Rules 8-10.)*

notice, require the owner or occupier of the premises—

(*a*) to replace such fittings, or

(*b*) to make such alterations therein as may be specified in the notice:

Provided that where any ferrule is obstructed owing to silt or other matter being deposited therein, the Corporation shall themselves cleanse such ferrule and replace it in proper order.

(*2*) If any notice issued under sub-rule (*1*) is not complied with within forty-eight hours, the Corporation may forthwith carry out the work, and the cost thereof shall be payable by the person to whom the notice was issued.

Inspection of works, etc., by qualified officer before permitting connection with mains

**8.** (*1*) Before a connection for the supply of water from the municipal mains to any premises is sanctioned by the Corporation, they shall cause all the works, pipes, taps and fittings within such premises to be inspected by a duly qualified officer.

(*2*) Until the Corporation have certified that the said works, pipes taps and fittings have been executed and put up in a satisfactory manner, no connection with the municipal mains shall be made.

*Meters.*

Testing of meter.

**9.** (*1*) If the owner or occupier of any premises to the service-pipe of which a meter is attached desires to have the meter tested, he may send a written application to the Corporation, and such application shall be accompanied by a fee of five rupees.

(*2*) Upon receipt of any such application and fee, the Corporation shall forthwith cause such meter to be tested, at a time and place to be specified in a notice to be served upon such owner or occupier.

(*3*) If such meter is found, upon being so tested, to register more than two *per cent.* in excess of the correct quantity, the said fee shall be returned to the person who sent it.

Payment by occupier in case of incorrectness of meter

**10.** If a meter which has been tested under rule 9 does not register more than two *per cent.* in excess of the correct quantity, the amount payable under section 238 shall be calculated according to the quantity indicated by the meter; but if the meter registers more than two *per cent.* in excess of the correct quantity, the quantity indicated shall, for the purpose of calculating the amount payable under section 238, be reduced by double the percentage of the excess registered:—

Provided that—

(*a*) if such excess is more than ten *per cent.*, no charge shall be made under section 238; and

(*b*) no reduction shall be allowed, in calculating the charge for excess under section 238, on account of the incorrectness of the meter, except on the amount payable for the

*(Schedule XIV.—Rules as to private connections to premises and meters.—Rules 11-13.)*

quarter in which the application referred to in rule 9, sub-rule (1), is received.

Replacing of meter

**11.** When any meter attached to the service-pipe of any premises is out of order or under repair, the Corporation shall forthwith replace it by another meter.

Prohibition of fraud in respect of meter

**12.** No person shall fraudulently—

(*a*) alter the index to any meter or prevent any meter from duly registering the quantity of water supplied, or

(*b*) abstract or use water before it has been registered by a meter set up for the purpose of measuring the same.

Prohibition of injuring meter or fittings

**13.** No person shall wilfully or negligently injure or suffer to be injured any meter belonging to the Corporation, or any of the fittings of any such meter.

## SCHEDULE XV.

### RULES AS TO DRAINS, PRIVIES AND URINALS.

[*See sections 266, 273, 274, 277, 278, 282, 284, 285, 286, 287, 304 (6) and (7) and 488.*]

### *Drains.*

Plans of house-drains to be submitted to Corporation

**1.** (*1*) Every person who intends to construct a house-drain, or to make any substantial additions to, or alterations in, a house-drain, shall send to the Corporation an application in such form (to be supplied free of charge) as may be prescribed by the Corporation, and shall state therein the name and address of the licensed plumber who will execute the work and the purposes for which the drain is to be used.

(*2*) Such application shall be accompanied by a plan, in triplicate unless the Corporation otherwise direct, drawn to a scale of eight feet to the inch (or such smaller scale as the Corporation may consider sufficient), and showing—

(*a*) the premises to be drained and the boundaries thereof,

(*b*) the position of all existing filtered water pipes within the premises,

(*c*) the alignment, gradient and size of the proposed house-drain and its appurtenances,

(*d*) any existing drains and their appurtenances, and

(*e*) any other particulars which may be prescribed by the Corporation.

Material and joints

**2.** Every underground house-drain constructed after the commencement of this Act shall consist of good sound pipes made of glazed stoneware or other suitable material, and shall have water-tight joints made of Portland cement or any other cement approved by the Executive Officer.

Size

**3.** Every such house-drain shall be of adequate size, with an internal diameter of not less than—

(*a*) six inches between the master-trap and the sewer, and

(*b*) four inches at all other places.

Angles.

**4.** No such house-drain shall be so constructed as to form in any of such drains a right-angled junction, either vertical or horizontal, and every branch drain or tributary drain shall be joined to another drain obliquely, at an angle of not less than one hundred and thirty-five degrees, in the direction of the flow of such other drain.

How to be laid

**5.** Every such house-drain shall be—

(*a*) laid upon a bed of good concrete of such width as may be approved by the Executive Officer, and not less than six inches thick,

*(Schedule XV.—Rules as to drains, privies and urinals.—Rules 6-8.)*

(*b*) covered for half its depth with concrete not less than four inches thick, and

(*c*) so constructed as to have a proper fall.

Prohibition of inlet within building

**6.** Every such house-drain shall be so constructed as to prevent any inlet to the drain (other than such inlet as may be required from the apparatus of a connected-privy or urinal or a slop-sink constructed or adapted to be used for receiving sewage) being made within the premises.

Traps

**7.** (*1*) In every such house-drain a suitable trap shall be provided.

(*2*) Such trap shall be placed—

(*a*) within the premises, or,

(*b*) with the approval of the Corporation and on payment of such fees as may be prescribed by the Corporation, in the footpath or (if there is no footpath) in the roadway adjacent to the premises, and

(*c*) at a point as distant as may be practicable from the premises and as near as may be practicable to the point at which the drain is connected with a municipal sewer

(*3*) Every inlet to any such house-drain (other than an inlet provided in pursuance of rule 8 as an opening for the ventilation of the drain) shall be properly trapped.

Ventilation

**8.** The ventilation of every such house-drain shall be provided for as follows:—

(*1*) at least two untrapped openings shall be made—

(*a*) one opening shall be made at or near the level of the surface of the ground adjoining the opening, shall be as near as may be practicable to the trap prescribed by rule 7, sub-rule (*1*), shall be on that side of such trap which is nearer to the premises, and shall communicate with the drain by means of a suitable pipe, shaft or disconnecting chamber;

(*b*) the second opening shall be made by carrying up, from a point in the drain as far distant as may be practicable from the point at which the opening mentioned in sub-clause (*a*) is situated, a pipe or shaft fixed vertically to such height and in such manner as effectually to prevent any escape of foul air from such pipe or shaft into any premises in the vicinity thereof, and in no case to a less height than ten feet;

(*2*) in any case in which the Executive Officer considers it impracticable to enforce the provisions of sub-clause (*a*) and sub-clause (*b*), the two openings prescribed by clause (*1*) shall be made as follows:—

(*i*) one opening shall be made by carrying up from a point as near as may be practicable to the trap prescribed by rule 7, sub-rule (*1*), a pipe or shaft fixed vertically to such height and in such manner as effectually to prevent any escape of foul air from

*(Schedule XV.—Rules as to drains, privies and urinals.—Rule 9.)*

such pipe or shaft into any premises in the vicinity thereof, and in no case to a less height than [illegible] feet; and such opening shall be situated on that side of the said trap which is nearer to the premises;

(*ii*) the second opening shall be made at a point in the drain as far distant as may be practicable from the point at which the said pipe or shaft is carried up, shall be at or near the level of the surface of the ground adjoining the opening, and shall communicate with the drain by means of a suitable pipe or shaft;

(*3*) every opening provided under this rule shall be furnished with a suitable grating or other suitable cover for the purpose of preventing any obstruction in, or injury to, any pipe or drain by the introduction of any substance through the opening;

(*4*) such grating or cover shall be so constructed and fitted as to secure the free passage of air through it by means of a sufficient number of apertures, the aggregate extent of which shall be not less than the sectional area of the pipe or drain to which the grating or cover is fitted;

(*5*) every pipe or shaft referred to in this rule shall be of a sectional area not less than that of the drain with which the pipe or shaft communicates, and not less than the sectional area of a pipe or shaft of the diameter of four inches;

(*6*) except with the written permission of the Corporation, no bend or angle shall be formed in any pipe or shaft referred to in this rule;

(*7*) where the situation, height, sectional area and mode of construction of the soil-pipe of any connected-privy or connected-urinal, or the waste-pipe from any slop-sink situated within any premises, are such as are prescribed by this rule for a pipe or shaft for ventilating a drain, such soil-pipe shall, with the consent of the Executive Officer, be deemed to provide the opening which, under this rule, is required to be provided by means of a pipe or shaft.

Soil-pipe of connected-privy or urinal

**9.** The soil-pipe of every connected-privy or connected-urinal constructed after the commencement of this Act or provided for a new building shall—

(*a*) be at least four inches in diameter,

(*b*) be fixed outside the privy or urinal, or outside the building in which the privy or urinal is situated, and be continued upwards without any diminution of its diameter,

(*c*) be of such height and be so placed as to afford, by means of the open end of the pipe, a safe outlet for sewer air,

(*d*) whenever practicable, be so constructed as to avoid any bend or angle, and

(*e*) be so constructed as to have no trap between the pipe and the drains with which the privy or urinal communicates, and no trap (other than such trap as necessarily forms part of the apparatus of the privy or urinal) in any part of the pipe.

*(Schedule XV.—Rules as to drains, privies and urinals.—Rules 10-12.)*

Ventilation of soil-pipe of connected privy or urinal detached from building

**10.** Where any such connected-privy or connected-urinal has no internal communication with any building other than the privy [illegible] then,—

(*a*) if the distance between the privy or urinal and the trap provided under rule 7, sub-rule (*1*), in the drain with which the privy or urinal communicates is not more than ten feet, no ventilation-pipe need be fixed in the soil-pipe;

(*b*) if the said distance is more than ten feet but not more than thirty feet, a ventilation-pipe shall be fixed in the soil-pipe at a point as far distant as may be practicable from the trap provided under rule 7, sub-rule (*1*); and such pipe shall be placed vertically to such height and in such manner as effectually to prevent any escape of foul air from the pipe into any building in the vicinity thereof, and in no case to a less height than ten feet, and shall be of a sectional area not less than that of the drain with which it communicates, and not less than the sectional area of a pipe of the diameter of four inches;

(*c*) if the said distance is more than thirty feet the soil-pipe shall be ventilated in the manner prescribed by rule 8.

Waste-pipes

**11.** (*1*) The following pipes in any new building, namely:—

(*a*) the waste-pipe from any bath-sink (not being a slop-sink constructed or adapted to be used for receiving sewage) or lavatory,

(*b*) the overflow-pipe from any cistern or from any safe under a bath or connected-privy or connected-urinal, and

(*c*) every other pipe for carrying off waste water,

shall be taken through an external wall of the building, may, if the Executive Officer so directs, be provided with a suitable trap, and shall be so constructed as to discharge into the open air over a channel leading to a trapped gully-grating at least eighteen inches distant from that end of the pipe from which the water issues.

(*2*) The waste-pipe in any such building from any slop-sink constructed or adapted to be used for receiving sewage shall be constructed so as to comply with such of the rules in this schedule as relate to the soil-pipe of a connected-privy or connected-urinal.

Open house-drains.

**12.** (*1*) Every open house-drain constructed after the commencement of this Act, or provided for a new building, for the purpose of discharging surface or sullage water, shall be constructed of brick masonry or concrete covered with a plaster containing not less than twenty-five *per cent.* of Portland cement or any other cement approved by the Executive Officer or of natural or artificial stone, or of glazed half-round pipes,

*(Schedule XV.—Rules as to drains, privies and urinals.—Rules 13-17.)*

(2) Every such open house-drain shall be connected with a municipal sewer through trapped inlets in the manner [illegible] under this Act or under any rule or by-law made thereunder for other house-drains.

Type-plans

**13.** Type-plans for the construction of house-drains shall be prepared by the Corporation and kept open to the inspection of any applicant at the municipal office at all reasonable times without charge.

Maintenance of house-drains kept up for the benefit of certain premises only

**14.** (1) Every house-drain which is situated in, alongside or under any street, and which has been or shall be constructed, whether at the charge of the municipal fund or not, for the sole use and benefit of, or which is continued for the sole use and benefit of, any premises adjoining or near to such street,

shall be maintained and from time to time repaired, flushed, cleansed and emptied by the owner or occupier of such premises as the Corporation may direct.

(2) The Corporation may, by written notice, require such owner or occupier, as the case may be—

(a) to repair, flush, cleanse or empty such house-drain, or

(b) to take such other order with such house-drain as the Corporation may deem necessary.

Maintenance of house drains jointly used by two or more premises

**15.** (1) Every house-drain whether constructed at the charge of the municipal fund or not which is jointly used for the drainage of two or more premises, shall be maintained and from time to time repaired, flushed, cleansed and emptied by the owners or occupiers of such premises as the Corporation may direct.

(2) The Corporation may, by written notice, require the said owners or occupiers, as the case may be, to carry out any work referred to in sub-rule (1), and the cost thereof, whether incurred by the said owners or occupiers or by the Corporation under section 510, sub-section (2), shall be paid by the said owners or occupiers in such proportion as the Corporation may think fit.

Power to Executive Officer to supervise and require alteration of work of laying underground drain

**16.** (1) When any underground drain, which is not a municipal drain, is being laid, the Executive Officer may cause the work to be supervised and may from time to time, by written notice to the person carrying out the work, require the making of any reasonable alteration or addition therein or thereto, or the abandonment of any part thereof, if such alteration, addition or abandonment appears to him to be necessary for ensuring the complete and satisfactory execution of the work.

(2) If any requisition under sub-rule (1) is not complied with, the Corporation may stop the work and dismantle anything which has been done in contravention of such requisition, and the expenses of so doing shall be paid by the person to whom the requisition was addressed.

Restriction on construction of drain beneath building.

**17.** Except with the written permission of the Corporation and in conformity with such conditions as may be prescribed by the Corporation, either

*(Schedule XV.—Rules as to drains, privies and urinals.—Rules 18, 19.)*

generally or specially, in this behalf, no drain shall be so constructed as to pass beneath any part of a building.

Drains passing beneath a building

**18.** The following provisions shall be observed when any drain is, with the permission of the Corporation granted under rule 17, constructed so as to pass beneath a building, namely :—

(*1*) the drain-pipe shall be of iron or such other material as the Executive Officer may approve;

(*2*) the drain shall be so laid as to leave, between the top of the drain at its highest point and the surface of the ground beneath the building, a distance of not less than the full diameter of the drain;

(*3*) the drain shall be laid in a direct line throughout the whole distance beneath the building;

(*4*) the drain shall be completely embedded in, and covered with, good and solid concrete at least six inches thick all round;

(*5*) adequate means for ventilating the drain shall be provided (where necessary) at each end of such portion thereof as lies beneath the building.

*Privies and urinals.*

Plans of privies and urinals to be submitted to Corporation

**19.** (*1*) Every person who intends to construct any privy or urinal or to make any substantial additions to, or alterations in, any privy or urinal, shall send to the Corporation an application in such form (to be supplied to the applicant free of charge) as may be prescribed by the Corporation

(*2*) Such application shall be accompanied by—

(*a*) a site-plan, in triplicate unless the Corporation otherwise direct, drawn to a scale of not less than twenty feet to the inch and showing all surroundings to a distance of fifty feet from the privy or urinal, and

(*b*) a detailed plan in triplicate of the privy or urinal with sections and cross-sections, drawn to a scale of four feet to the inch and showing—

(*i*) the means of ventilation,

(*ii*) (for connected-privies and connected-urinals only) the position and capacity of the reserve tank and flushing cistern,

(*iii*) (for connected-privies and connected-urinals only) the size and position of the anti-syphonage pipe, soil-pipe, ventilation-pipe, water-pipe, syphon-trap, and other appurtenances,

(*iv*) the ground-level and the floor-level,

(*v*) all pipes and other appurtenances in connection with the filtered water-supply, and

*(Schedule XV.—Rules as to drains, privies and urinals.—Rules 20-23.)*

(*vi*) any other particulars which may be prescribed by the Corporation :

Provided that where any privy or urinal forms part of any building for which an application has been made under rule 52 of Schedule XVII, the particulars required under this rule may be attached to such application.

Power to Corporation to refuse to sanction service-privy or service-urinal which will be a nuisance

**20.** The Corporation may, for reasons to be recorded by them in writing and furnished to the applicant free of charge, refuse to grant permission to erect any service-privy or service-urinal which will, in their opinion, be a nuisance

Regulation of site of service-privies and service-urinals

**21.** (*1*) No service-privy or service-urinal exceeding eleven feet in height shall be placed in the space required by this Act to be left at the back of a building.

(*2*) No service-privy or service-urinal situated in, or adjacent to, a building shall be placed at a distance of less than six feet from—

(*i*) any public building, or

(*ii*) any building which is, or is likely to be, used as a dwelling-place, or a kitchen, or as a place in which any person is, or is intended to be, employed in any manufacture, trade or business.

(*3*) No service-privy or service-urinal shall be constructed in any premises occupied by a masonry building, or, without the special sanction of the Corporation, in any other premises which are situated in a street which has been sewered and has an adequate unfiltered water-supply.

(*4*) Every service-privy and service-urinal shall be detached from the inhabited portion of any building.

Power to Corporation to require substitution of connected-privies for service-privies and connected-urinals for service-urinals

**22.** (*1*) No service-privy or service-urinal shall be placed on any upper floor of a building.

Provided that, if in any case the Corporation considers it impracticable or inexpedient to provide a connected-privy or a connected-urinal, they may, by written notice, authorize the owner of the building to erect a service-privy or a service-urinal, as the case may be.

(*2*) The Corporation may, by written notice, require the owner of any building to convert any service-privy into a connected-privy and any service-urinal into a connected-urinal.

Power to Corporation to require owner to provide access to service-privy or service-urinal from street

**23.** (*1*) If there is no convenient access from a street to any service-privy or service-urinal, and if the Corporation consider it inexpedient to require that the privy or urinal be converted into a connected-privy or connected-urinal, as the case may be, they may, if they think fit, by written notice, require the owner of the privy or urinal to form a passage giving access thereto from a street.

(*2*) Every notice served under sub-rule (*1*) shall require that such passage be formed at ground-level, be not less than four feet wide, and be provided with a suitable door, and shall inform the said owner that the passage may, at his option, be either open to the sky or covered in.

*(Schedule XV.—Rules as to drains, privies and urinals.—Rules 24-27.)*

Models and type-plans

**24.** Models and type-plans of privies and urinals approved by the Corporation, with estimates of the cost of constructing privies and urinals in accordance therewith, shall be kept in the municipal office, and shall be open to inspection by any person at all reasonable times without charge; but no person shall be bound to construct any privy or urinal in accordance with any such model or type-plan if such privy or urinal be constructed in accordance with the other rules contained in this schedule.

Drains.

**25.** (*1*) A drain shall be provided for every service-privy and every service-urinal.

(*2*) Such drain shall be constructed of some impervious material and shall connect the floor of the privy or urinal—

(*a*) with a drain communicating with a municipal sewer, or

(*b*) if permitted by the Corporation, with an impervious cesspool the contents of which can be removed to a municipal sewer either by hand or by flow after filtration.

Floor.

**26.** (*1*) The floor of every privy and every urinal shall,—

(*a*) if the Executive Officer in any case so directs, be made of one of the following materials, to be selected by the owner of the privy or urinal, that is to say, glazed tiles, artificial stone or cement, or

(*b*) if no such direction is given, be made of thoroughly well-burnt earthen tiles or bricks plastered (and not merely pointed) with cement, and

(*c*) be in every part at a height of not less than six inches above the level of the surface of the ground adjoining the privy or urinal

(*2*) The floor of every service-privy and every service-urinal shall have a fall or inclination of at least half an inch to the foot towards the drain prescribed by rule 25.

(*3*) The floor of every connected-privy and connected-urinal in which the opening of the pan is placed on the level of the floor shall have a fall or inclination towards the pan of at least half an inch to the foot.

Walls and roof.

**27.** The walls and the roof (if any) of every privy and every urinal shall be made of such materials as may be approved by the Corporation:

Provided that—

(*a*) in the case of service-privies and service-urinals, the entire surface of the walls below the platform shall either be rendered in cement or be made as prescribed in clause (*a*) or clause (*b*) of sub-rule (*1*) of rule 26;

(*b*) in the case of connected-privies and connected-urinals the walls shall, up to a height of at least twelve inches above the platform, be made as prescribed in clause (*a*) or clause (*b*) of sub-rule (*1*) of rule 26.

*(Schedule XV.—Rules as to drains, privies and urinals.—Rules 28-32.)*

Platform

**28.** The platform of every privy and every urinal shall either be plastered with cement or be made of some water-tight non-absorbent material.

Ventilation of privies and urinals in, or adjacent to, buildings

**29.** Every privy and every urinal situated in, or adjacent to, a building shall have an opening, of not less than three square feet in area, in one of the walls of the privy or urinal, as near the top of the wall as may be practicable and communicating directly with the open air.

Service privies and urinals to be provided with a movable receptacle for sewage

**30.** (*1*) Every service-privy and service-urinal shall be provided with a movable receptacle for sewage.

(*2*) The following provisions shall have effect with regard to such privies, urinals and receptacles, namely :—

(*a*) the space beneath the platform of the privy or urinal shall be of such dimensions as to admit of a movable receptacle for sewage, of a capacity not exceeding two cubic feet, being placed and fitted beneath the platform in such manner and position as will effectually prevent the deposit, otherwise than in such receptacle, of any sewage falling or thrown through the aperture in the platform,

(*b*) the privy or urinal shall be so constructed as to afford adequate access to the said space for the purposes of cleansing it and of placing therein, and removing therefrom, a proper receptacle for sewage;

(*c*) the said receptacle shall be water-tight, and shall be made of metal, well-tarred earthenware or glazed stoneware, and shall be of such construction and shape as the Executive Officer may consider suitable;

(*d*) the door of the opening for the insertion and removal of the said receptacle shall be so made as completely to cover the said opening.

Connected-privies and urinals to be separated from kitchens, etc.

**31.** Every connected-privy and connected-urinal shall be sufficiently separated, to the satisfaction of the Executive Officer, from all kitchens, habitable rooms and rooms in which any person is, or is intended to be, employed in any manufacture, trade or business.

Flushing of connected privies and of urinals

**32.** (*1*) Every connected-privy shall be provided with a suitable water-cistern, so arranged as—

(*a*) to discharge direct into the pan of the privy not less than three gallons of water each time the cistern is used, and

(*b*) to prevent water being drawn from the cistern for any other purpose.

(*2*) All waste-pipes and overflow-pipes attached to such cisterns shall terminate in the open air and be cut off from all direct communication with any drain.

(*Schedule XV.—Rules as to drains, privies and urinals.—Rules 33-37.*)

(*3*) Every urinal shall be provided with adequate flushing arrangements to the satisfaction of the Chief Engineer.

(*4*) For the purpose of supplying water to the flushing cistern of a connected-privy or connected-urinal a reserve tank of such capacity as may be prescribed by the Corporation shall be provided at a height sufficient to supply the cistern with water, and in case the reserve tank is situated at such a height that it cannot be supplied direct from the street main, the owner of the premises shall provide a suitable pump and shall make all necessary arrangements to ensure a satisfactory supply of water to the reserve tank :

Provided that where the height of the building containing such privy or urinal does not exceed the number of feet for which the pressure of unfiltered water is required by or under this Act for that street, the provisions of this sub-rule shall not be put into operation.

Pan for connected-privies and urinals.

**33.** Every connected-privy and connected-urinal shall be provided with a pan of such form and dimensions as may be approved by the Chief Engineer.

Water-trap

**34.** Every connected-privy and connected-urinal shall be provided with an air-tight water-trap immediately below the pan.

Syphon trap and anti-syphonage pipe

**35.** (*1*) Every connected-privy and connected-urinal shall be provided with a syphon-trap which shall be proof against syphonage.

(*2*) In all cases where a connected-privy or connected-urinal is more than one storey high, an anti-syphonage pipe having an internal diameter of not less than two inches shall be provided, and such pipe shall be carried independently to a height of at least two feet above the roof of the privy or urinal or the roof of the building in which such privy or urinal is situated

Prohibition of "containers" and "D traps"

**36.** No "container" or other similar fitting shall be placed under the pan of a connected-privy or connected-urinal; and no trap of the kind known as a "D trap" shall be used with any such privy or urinal.

Soil-pipe for connected-privies and connected-urinals

**37.** (*1*) Every connected-privy and connected-urinal shall be provided with a soil-pipe for carrying sewage to a municipal sewer.

(*2*) Such soil-pipe shall be provided with air-tight joints, and, if it be placed above ground, shall be made of metal approved by the Executive Officer.

(*3*) Such soil-pipe shall, in addition to the trap prescribed by rule 34, be provided with a trap placed at some point between the privy or urinal and the sewer referred to in sub-rule (*1*).

*(Schedule XV.—Rules as to drains, privies and urinals.—Rule 38.)*

(4) Such [illegible] shall be ventilated by direct communication with the open air in the manner prescribed by the rules contained in this schedule; and, if the privy or urinal is situated in a building, the pipe shall be carried outside the building.

Enforcement of the foregoing rules in the case of future privies or urinals

**38.** If any new building which is a privy or urinal is so constructed as to contravene any of the provisions of this schedule, the Corporation may (whether or not the offender be prosecuted under this Act), by written notice, require—

(*a*) the occupier of the building to which the privy or urinal belongs, or

(*b*) (if the privy or urinal does not belong to a building) the owner of the land on which the privy or urinal stands,

to make such alterations as may be specified in the notice with the object of bringing the privy or urinal into conformity with the said provisions.

## SCHEDULE XVI.

### RULES AS TO THE REGULATION, MAINTENANCE, PROTECTION AND REPAIR OF STREETS AND PUBLIC PLACES.

*(See sections 298, 364 (8) and (9) and 488.)*

*Regulation, maintenance and protection of streets and public places.*

Cutting of hedges and trees and power to Corporation to cause same to be cut

**1.** (*1*) The Corporation shall cause any hedges belonging to them which border on any street or square to be trimmed or pruned to a height not exceeding seven feet, and shall cause any trees belonging to them which overhang any public street, so as to obstruct the same or cause damage thereto, to be cut and trimmed.

(*2*) The Corporation may, by written notice, require the owner or occupier of any land or building to trim or prune, to a height not exceeding seven feet, any hedges thereof bordering on any public street, or to cut and trim any tree appertaining to such land or building which overhangs any public street so as to obstruct the same or cause damage thereto

(*3*) The Corporation, if for the public safety it appears to them necessary to do so, may cause any hedge or tree referred to in sub-rule (*2*) to be trimmed, pruned or cut without previously giving notice to the owner or occupier of the land or building as required by that sub-rule, and the Corporation may nevertheless require the expenses thereof to be paid by the said owner or occupier.

Regulation of verandahs, etc., projecting over streets

**2.** (*1*) No verandah supported by pillars resting on a street shall be erected, either as a new structure or otherwise,—

(*a*) in any street specified by the Corporation in that behalf, or

(*b*) in any street the width of which is less than fifty feet and the footpath of which is not less than eight feet in width.

(*2*) No roof shall be placed on any verandah supported as aforesaid, and no roof exceeding three feet in width shall be placed on any verandah projecting over a street and not so supported.

(*3*) No person shall put up any verandah, balcony, sunshade, weather-frame or the like, to project over any street, without the written permission of the Corporation.

(*4*) Subject to the provisions of sub-rule (*1*) and sub-rule (*2*), the Corporation may, in their discretion, give written permission, on such conditions as they may think fit and on payment of such fees or rent as may be fixed from time to time by the Corporation, to owners or occupiers of buildings abutting on any street to put up verandahs, balconies, sunshades, weather-frames and the like, whether supported by pillars or not, to project from any building over such street.

*(Schedule XVI.—Rules as to the regulation, maintenance, protection and repair of streets and public places.—Rules 3-5.)*

(5) On the breach of any such condition, the Corporation may, by written notice, require the owner or occupier of the said building to comply with such condition.

(6) At any time after permission has been given under sub-rule (4) to put up a verandah, balcony, sunshade, weather-frame or the like, to project from a building, the Corporation may, by written notice, require the owner or occupier of the building to remove such projection; and the owner or occupier shall be entitled to reasonable compensation out of the municipal fund on account of such removal.

Provided that no fee shall be charged for any verandah, balcony, weather-frame or the like when the same is situated in or over any street not vested in the Corporation.

Sky signs.

**3.** (1) No person shall erect or maintain a sky-sign without the written permission of the Corporation, which shall not be granted unless the sign is so constructed and maintained as not to be dangerous to the public or likely to fall into any street or public place.

(2) Every written permission granted under sub-rule (1) shall continue in force for not more than one year from the date on which it was granted, and may be revoked at any time by the Corporation if they consider that the sky-sign for which it was granted has become dangerous to the public or is likely to fall into a street or public place.

*Execution of works in public streets.*

Guarding and lighting when public street opened or broken up and speedy completion of work.

**4.** (1) When any drain in, or the pavement or surface of, any public street is opened or broken up for the purpose of carrying on any work, or when any public street is under construction, the Corporation shall cause the place to be fenced and guarded and to be sufficiently lighted during the night and shall take proper precautions for guarding against accident, by shoring up and protecting adjoining buildings;

and shall, with all convenient speed, complete the said work, fill in the ground, and repair the said drain, pavement or surface, and carry away the rubbish occasioned thereby.

(2) No person shall, without lawful authority, remove any fence or shoring-timber, or remove or extinguish any light, set up under sub-rule (1).

Power to Corporation to prevent or restrict traffic in street during progress of work.

**5.** (1) When any work referred to in rule 4 is being executed in any public street, or when any other work which may lawfully be done is being executed in any street, the Corporation may direct that such street shall, during the progress of such work, be either wholly or partially closed to traffic generally or to traffic of any specified description.

(2) When any such direction has been given, the Corporation shall set up in a conspicuous position in or near the street an order prohibiting traffic to the extent so directed, and shall fix such bars, chains or

*(Schedule XVI.—Rules as to the regulation, maintenance, protection and repair of streets and public places.—Rules 6-8.)*

posts across or in the street as they may think proper for preventing or restricting traffic therein.

(3) No person shall, without lawful authority, infringe any such order or remove any such bar, chain or post.

*Naming of public streets and numbering of premises.*

Posting of street names.

**6.** (1) The Corporation shall from time to time cause to be put up or painted, in a durable manner, on a conspicuous part of some building, wall or place, at or near each end, corner or entrance of every public street, such name as the Corporation may from time to time determine under section 295, sub-section (2), as the name by which such street is to be known

(2) No person shall, without lawful authority, destroy, pull down, or deface any such name, or put up any name different from that put up by order of the Corporation

Numbering of premises

**7.** (1) The Corporation shall from time to time cause all premises in or near each public street to be numbered separately, and shall cause their respective numbers to be affixed in conspicuous places outside such premises at or near the entrances thereto.

(2) No person shall, without lawful authority, destroy, pull down or deface any such number, and no person shall affix to any such premises a private number of the same design as such number.

Corporation to keep a register of premises

**8.** The Corporation shall keep a register of all alterations made by them in the names of streets and in the numbers of the houses therein and such register shall be kept in such a form as to show the date of every such alteration and the name of the street and the number of the premises previous to such alteration, as well as the new name of the street and the new number of the premises. It shall be lawful for any person to inspect such register and to take a copy of any portion thereof upon payment of such reasonable fee as the Corporation may from time to time determine

## SCHEDULE XVII.

### RULES AS TO THE USE OF BUILDING-SITES AND THE EXECUTION OF BUILDING-WORK.

[*See sections 319, 330, 331, 363, 364 (10), 488, 494 and 495.*]

*Part I.—Building-sites.*

Conditions as to use of building-sites.

**1.** No piece of land shall be used as a site for the erection of a building,—

(*1*) if the building is to abut on a street, unless the site is of such a shape that the face of the building can be made parallel to the line of the street, or as nearly parallel to the said line as the Corporation may consider practicable; and,

(*2*) if the site is within thirty feet of a tank, unless the owner takes, or satisfies the Corporation that he will take, such order as will prevent any risk of the drainage of the building passing into the tank; and,

(*3*) if the site is a filled-up tank, or has been filled up with, or used for depositing, rubbish, offensive matter or sewage, unless the Corporation have caused the site to be examined and granted a certificate to the effect that it is, from sanitary and engineering points of view, fit to be built upon; and,

(*4*) if the building to be erected is a public building, a dwelling-house or a hut intended for human habitation, unless the site is certified by the Corporation to be dry and well-drained, or unless the Corporation are satisfied that it is capable of being well-drained and that the owner will take the necessary steps to drain it.

Certificate as to correctness of plans of a previously existing building and fees therefor

**2.** (*1*) Any person who intends to erect any building upon a site on which a building has been previously erected, whether before or after the commencement of this Act, may, before commencing to erect his intended building, cause to be prepared plans showing the extent of the previously existing building in its several parts (or, in the event of such building having been taken down before the commencement of this Act, or having been accidentally destroyed, the best plans available under all the circumstances of the case), and may cause such plans to be submitted to the Corporation who shall (if reasonably satisfied with the evidence of their accuracy) certify the same; and such certificate shall for the purposes of these rules be taken to be conclusive evidence of the correctness of the plans.

(*2*) The Corporation, when granting a certificate under this rule, may charge such fees, not exceeding ten rupees for any one building, as they may think fit.

*Part II.—Buildings generally.*

Height.

**3.** (*1*) If a building is situated at the side of a street, no portion of the building, except open or balustraded parapets not more than four feet high, shall intersect any of a series of imaginary lines

*(Schedule XVII.—Rules as to the use of building-sites and the execution of building work.—Rule 3.)*

drawn across the street at an angle of forty-five degrees with the horizontal, such lines being drawn from the side of the street which is the more remote from the building in question, from a height of two feet above the centre of the street:

Provided as follows—

(*i*) where the said street is joined at an angle by another street facing the building, or where the street in which the building is situated terminates in front of the building, the height of that portion of the building which is opposite the street facing it measured from two feet above the centre of the street, shall in the former case, not exceed the height which would be permissible if the building abutted on or were situated on the side of a street equal in width to the width of the street on which it abuts or on the side of which it is situated *plus* half the width of the street facing it, and in the latter case, the height of the building shall not exceed the height which would be permissible if the building abutted on or were situated on the side of a street one-and-a-half times the width of the street terminating in front of it,

(*ii*) nothing herein contained shall affect the erection of a four-storeyed building abutting upon, or situated at the side of a street of not less than forty-five feet in width, if such building, including the parapet wall and the plinth, does not exceed fifty-six feet in height;

(*iii*) nothing herein contained shall affect the erection of a building abutting upon, or situated at the side of, a street of not less than sixty feet in width, if such building does not exceed eighty feet in height; and

(*iv*) no building exceeding eighty feet in height shall be erected without the special permission of the Corporation, who in granting such permission, may impose such conditions as they may think proper for the safety of the public and the safety and convenience of persons occuping the building.

*Explanation*—If a building be placed at the edge of the street, its height, measured from two feet above the centre of the street, and excluding parapets as aforesaid, shall not exceed the average width of the street facing the site; but, if the building or one or more of its storeys be set back, the height of the building may be increased, subject to the condition that no portion of the building, after the height is increased intersects any of the aforesaid lines.

(*2*) In the case of a new building erected on any portion of the site of the whole or part of a building

*(Schedule XVII.—Rules as to the use of building-sites and the execution of building-work.—Rule 3.)*

in existence at the commencement of this Act, the angle at which the lines referred to in sub-rule (*1*) are to be drawn shall be fifty-six-and-a-half degrees instead of forty-five degrees:

Provided as follows—

(*i*) the height allowed under this sub-rule shall in no case exceed thirty-six feet, and

(*ii*) except with the special permission of the Corporation, nothing contained in this sub-rule shall authorize the erection of a new building so as to make any portion of it higher than any building which at the commencement of this Act was standing on the same portion of the site.

(*3*) Notwithstanding anything contained in sub-rule (*1*) or sub-rule (*2*), the Corporation may, by order published in the *Calcutta Gazette*, declare that, in any street or portion of a street, not less than twelve feet in width, which is specified in the order, the erection of two-storeyed buildings not exceeding twenty-eight feet in height excluding two feet for the plinth and excluding open or balustraded parapets not more than four feet high, will be permitted without complying with the requirements of those sub-rules

(*4*) If a building is situated on a corner plot so as to abut upon more than one street, the narrower of such streets shall, for the purpose of regulating the height of the building, be deemed to be of the same width as the wider street to a distance of fifty-five feet from such wider street.

(*5*) Notwithstanding anything contained in sub-rules (*1*), (*2*) or (*4*),—

(*a*) a building of not more than one storey and not exceeding twelve feet in height (excluding two feet for the plinth) above the centre of the street, and

(*b*) if, in any street which is less than twelve feet in width, the owner of any building-site abutting on the street makes a free gift to the Corporation of all land comprised within such site, which falls within six feet of the centre line of such street, then a two-storeyed building not more than twenty-eight feet high,

may be erected without complying with the requirements of the said sub-rules.

(*6*) For the purposes of clause (*b*) of sub-rule (*5*) of this rule and of clause (*b*) of sub-rule (*4*) of rule 30—

(*a*) the Corporation may prescribe a centre line for any street which is less than twelve feet in width, and

(*b*) when such centre line has been prescribed, the side of the street shall, for the purposes of sub-rule (*1*), be deemed to be an imaginary line drawn six feet from such centre line.

*(Schedule XVII.—Rules as to the use of building-sites and the execution of building-work.—Rules 4—8.)*

Level of floor.

**4.** The floor or lowest floor of every new building erected from the ground-level shall be constructed at such level as will admit of—

(*a*) the construction of a drain sufficient for the effectual drainage of the building and placed at such level as will admit of the drainage being led into some municipal sewer at the time existing or projected, and

(*b*) the provision of the requisite communication with some sewer into which the drainage may lawfully be discharged at a point in the upper half of such sewer or with some other means of drainage into which the drainage may lawfully be discharged

Provision of fire-escapes, staircases and lift in certain buildings

**5.** (*1*) All public buildings and all buildings of the warehouse class, and where the Corporation deem it necessary, all buildings of four or more storeys, shall be provided with adequate means of escape in case of fire, to the satisfaction of the Corporation, and shall also be provided with such number of staircases as the Corporation may require.

(*2*) The Corporation may, by written notice, require the owner of a new building, more than sixty feet in height or comprising four or more storeys, erected after the commencement of this Act, to provide a lift or some other similar mechanical contrivance for carrying persons from one floor to another.

Certain buildings not to be erected within six feet of a service-privy

**6.** No new public building or new building which is, or is likely to be used as a dwelling-place or a kitchen or as a place in which any person is, or is intended to be, employed in any manufacture, trade or business shall be erected within six feet of any service-privy or service-urinal.

Prohibition of use of inflammable materials for roofs or external walls.

**7.** (*1*) External roofs or walls of buildings shall not, after the commencement of this Act, be made of grass, leaves, mats, canvas or other inflammable materials.

(*2*) The Corporation may, by written notice, require the owner of any building situated within a distance of thirty feet from any other building, and having at the commencement of this Act an external roof or wall made of any such inflammable material, to remove or alter such roof or wall.

(*3*) Sub-rules (*1*) and (*2*) shall not apply to bamboo shingle or wood or to any garden hut, orchid house, fernery or other similar structure within a compound, unless in any particular case the Corporation consider any such structure to be dangerous.

*Part III.—Masonry buildings generally*

Foundation

**8.** (*1*) Except with the sanction of the Corporation, the foundation of a masonry building shall rest on solid ground.

*(Schedule XVII.—Rules as to the use of building-sites and the execution of building-work.—Rules 9—14.)*

(2) Except with the sanction of the Corporation, the spread of the foundation shall be such that the pressure on the soil, taking into account the load on the floors and terrace-roof (if any) referred to in rules 15 and 17, shall not be greater than one ton on the square foot.

(3) The level of the foundation shall be such as the Corporation may consider satisfactory

Plinth

**9.** The plinth of a masonry building, except in the case of motor garages and coach-houses, shall be at least two feet above the level of the centre of the nearest street:

Provided that the plinth of stables and cow-sheds, may be one foot above such level

Footings for walls

**10.** Every wall of a masonry building shall be constructed so as to rest upon proper footings having regular offsets and on each side of the wall a horizontal spread (equal on each such side) of not less than one-half the height of the footings, provided that when an adjoining wall interferes the footings may, subject to the provisions of rule 8, sub-rule (2), be omitted, where that wall adjoins.

Outer walls.

**11.** The outer walls of a masonry building shall be constructed of brick or some similar hard and incombustible substance.

Bonding of walls.

**12.** All walls of a masonry building shall be properly bonded.

Damp-proof course

**13.** (1) Every wall of a masonry building shall have a damp-proof course at the level of the ground floor.

(2) Such damp-proof course may consist of sheet-lead, asphalt, slates laid in cement, vitrified bricks or any other durable material impervious to moisture.

Walls in building of more than one storey

**14.** If a masonry building exceeds one storey in height,—

(a) every wall shall be solidly put together with—

(i) good cement, or

(ii) good lime, or

(iii) mortar compounded with good cement and sand or other suitable material, or

(iv) mortar compounded with good lime and sand or other suitable material;

(b) the proportions of the materials forming such mortar shall be such as are approved by the Corporation;

(c) no part of any wall, other than a cornice or moulding, shall overhang any part of a wall underneath it; and

*(Schedule XVII.—Rules as to the use of building-sites and the execution of building-work.—Rules 15—21.)*

(*d*) every wall shall be of such thickness as the Corporation may consider necessary to ensure safety, regard being had to the height of the building, the materials of which it is constructed, and the purpose for which it is intended to use it.

Floors.

**15.** The floors of every masonry building shall be constructed to bear safely the maximum load to be carried, the allowance for live load not being less than fifty-six pounds on the square foot.

Beams and girders

**16.** (*1*) All beams and girders in a masonry building shall be supported by a breadth of brick-work, stone or other solid substance sufficient to secure their stability.

(*2*) The bearing of a beam or girder on a wall shall not, without the sanction of the Corporation, be less than three-fourths of the thickness of the wall.

Terrace roofs

**17.** Terrace-roofs shall be constructed to withstand such load, not less than forty pounds on the square foot, in addition to their own weight, as may be specified by an order of the Corporation.

Power to Corporation to regulate height of boundary wall

**18.** Notwithstanding anything contained in this schedule, a boundary wall may be erected on the boundary of a site to any height which the Corporation may think fit and proper in the special circumstances of the case.

Notice to be sent to Corporation before commencing work

**19.** Not less than three days before any person commences to erect a new building (other than a hut) the owner of the building shall send to the Corporation a written notice specifying the date on which it is proposed to commence the work.

Notice after completion of work

**20.** Within one month after the completion of the erection of a new building (other than a hut)—

(*a*) the owner of the building shall send to the Corporation a written notice of the fact of such completion; and

(*b*) the licensed building surveyor or other person (if any), employed under rule 55 to supervise the erection of the said building, shall sign and send to the Corporation a true certificate in the following form:—

"BUILDING COMPLETION CERTIFICATE.

*(See Schedule XVII, r. 20.)*

I do hereby certify that the following building work (*here insert full particulars of the work*) has been supervised by me and has been completed to my satisfaction; that the workmanship and the whole of the materials used are good; and that no provision of the Calcutta Municipal Act, 1923, or of the rules and by-laws made thereunder, and no requisition made, condition prescribed or order issued under the said Act, rules or by-laws has been transgressed in the course of the work."

Inspection of masonry buildings by Corporation

**21.** The Corporation may,—

(*a*) at any time during the erection of any new building (other than a hut), or

(*b*) within one month after the receipt of the notice or the certificate sent under rule 20 with respect to any such building, or

*(Schedule XVII.—Rules as to the use of building-sites and the execution of building-work.—Rules 22—24.)*

(c) if no such notice or certificate has been received, at any time after the building has been erected,

inspect such building, without giving previous notice of their intention to do so.

Power to Corporation to take action after making inspection.

**22.** (1) If, on making any inspection under rule 21, the Corporation find that the building inspected is being or has been erected—

(a) otherwise than in accordance with the plans thereof which they have approved, or

(b) in such a way as to contravene any of the provisions of this Act or any rules or by-laws made thereunder,

they may, by written notice, require the owner of the building either—

(i) to make such alterations as may be specified in the notice with the object of bringing the work into conformity with the said plans or provisions, or

(ii) to appear before them and show cause why such alterations should not be made.

(2) If such owner does not appear and show cause under clause (ii) of sub-rule (1), he shall be bound to make the alterations specified in such notice.

(3) If such owner appears and shows cause under clause (ii) of sub rule (1), the Corporation shall, after hearing him, either—

(a) cancel the notice issued under sub-rule (1), or

(b) confirm the same, subject to such modifications (if any) as they may think fit.

*IV.—Dwelling-houses and other domestic buildings.*

Proportion of site for dwelling-house which may be built upon.

**23.** The total area covered by all the buildings on any site used for a dwelling-house shall not exceed two-thirds, or, in localities where the erection of only detached buildings is allowed, one-third, of the total area of the site, and the area not so covered shall form part of the site:

Provided that the Corporation may at any time permit an excess area not exceeding five *per cent* of the total area of the site to be covered in the case of a detached building, where they are satisfied, for special reasons to be recorded in writing, that the convenience or amenity of the building will be substantially increased, if such excess area is permitted to be covered.

Dwelling-houses and out-offices, where two-thirds of site are left vacant

**24.** (1) If two-thirds of any building-site are left vacant—

(a) the dwelling house may be placed in any part of the site, but not (subject to the provisions of section 303 or section 309, as the case may be) so as to extend beyond any building-line prescribed under section 302 or section 308; and

*(Schedule XVII.—Rules as to the use of building-sites and the execution of building-work.—Rules 25—27.)*

(*b*) servants' houses, stables and other out-offices within the area of the site shall not be of more than two storeys or exceed twenty-four feet in height or twenty feet in depth, and shall not be placed on more than two sides of the dwelling-house or within twenty-four feet of the dwelling-house.

(*2*) If two-thirds of a building-site are left vacant under sub-rule (*1*) no building or part of a building shall be erected so as to encroach upon the area so left vacant:

Provided that the Corporation may at any time permit an excess area not exceeding five *per cent.* of the total area of the site to be covered in the case of a detached building where they are satisfied, for special reasons to be recorded in writing, that the convenience or amenity of the building will be substantially increased, if such excess area is permitted to be covered

Size and ventilation of inhabited rooms

**25.** Every room in a domestic building which is intended to be used as an inhabited room—

(*a*) shall be in every part not less than ten feet in height, measured from the floor to the under-side of the beam on which the roof or ceiling rests,

(*b*) shall have a clear superficial area of not less than eighty square feet,

(*c*) shall have, for purposes of ventilation,

(*i*) windows opening directly into the external air, or into an open verandah, and having an opening of not less than one-fifteenth of the floor-area of the room, and

(*ii*) an aggregate opening of not less than one-seventh of the floor-area of the room, to be provided by windows, or windows and doors, opening directly into the external air or into an open verandah, and

(*d*) shall, if such room has a cubical area of three thousand cubic feet or less, be provided, for every six hundred cubic feet capacity or fraction thereof, with one or more ventilating openings aggregating not less than one-and-a-half square feet in area, near the ceiling and opening directly into the external air or into an open verandah:

Provided that the Corporation may, in their discretion, relax the provisions of clause (*a*) and clause (*d*).

Floor of inhabited room over stable, cattle-shed or cow-house

**26.** Every room in a domestic building which is intended to be used as an inhabited room, and which is constructed over a stable, cattle-shed or cow-house, shall be separated from the stable, cattle-shed or cow-house by a floor of concrete or other impermeable material.

Lighting and ventilation of staircases

**27.** In every domestic building constructed or adapted to be occupied in flats or tenements, the principal common staircase shall be adequately lighted and ventilated upon every storey.

*(Schedule XVII.—Rules as to the use of building-sites and the execution of building-work.—Rules 28-30.)*

Ground floor

**28.** The ground floor of every domestic building shall be covered throughout, at the height of the plinth, with some impermeable material approved by the Corporation, unless such floor be supported on beams and has a free air-space beneath it.

Court yard of dwelling house

**29.** (*1*) The minimum superficial area of every court-yard of a dwelling-house shall be one-fourth of the aggregate floor-area of the rooms and verandahs on the ground floor abutting on the court-yard :

Provided that, in determining the said aggregate floor-area,—

(*i*) only one-half of the floor-area of such rooms and verandahs as abut on another court-yard or on the open space prescribed under rule 30, or rule 32, and

(*ii*) no portion of the floor-area of such rooms and verandahs as abut on a street not less than twelve feet in width,

shall be taken into account.

(*2*) Any room which is separated only by an open verandah from the court-yard shall, for the purpose of this rule, be deemed to abut on such court-yard

(*3*) The minimum width of every such court-yard shall be eight feet

(*4*) No portion of any face of a dwelling-house abutting on such court-yard shall intersect any of a series of imaginary lines drawn across the court-yard from the opposite face of the house, at the level of the plinth, at an angle of sixty-eight degrees with the horizontal :

Provided that nothing contained in this sub-rule shall prevent the construction of four-storeyed buildings on two sides of a court-yard where the length of the court-yard opposite such buildings is not less than twenty feet and the width of such court-yard is not less than fifteen feet.

(*5*) For the purposes of sub-rule (*4*), the opposite face of the house shall be deemed to be a vertical plane drawn through the most projecting portion of such face excluding any cornice or moulding not exceeding eighteen inches.

(*6*) Notwithstanding anything contained in sub-rule (*4*), a dwelling-house abutting on a court-yard of which the greater dimension does not exceed twice the less dimension, shall be held to comply with this rule if, by reason of its abutting on a court-yard of the same area but square in shape, the building would comply with this rule.

Open space in rear of building, regulating the rear height

**30.** (*1*) There shall be, at the back of every domestic building, an open space extending along the entire width of the building and forming part of the site thereof.

(*2*) The said space shall be of such width that any of a series of imaginary lines drawn across such

*(Schedule XVII.—Rules as to the use of building-sites and the execution of building-work.—Rule 31.)*

space at an angle of sixty-three-and-a-half degrees with the horizontal, from points on a level with the plinth of the building and situated on that side of the said space which is furthest from the building, shall not intersect any portion (other than open or balustraded parapets not more than four feet in height) of the building :

Provided as follows—

(*i*) the minimum width of such space shall be ten feet ;

(*ii*) in the case of three-storeyed buildings, the angle referred to in this rule shall be increased from sixty-three-and-a-half degrees to sixty-eight degrees ; and

(*iii*) in the case of any building in which there are both an outer and an inner court-yard, a minimum distance of six feet shall be permitted.

(*3*) If it is proposed to erect one or more buildings on the site of an existing building or if two or more buildings are proposed to be erected on any one site (whether or not such buildings are connected by means of verandahs or gangways or in any similar manner), the open space referred to in sub-rule (*1*) shall be provided at the back of each such building.

(*4*) This rule shall not apply in the case of—

(*a*) a building the back of which abuts on a public square or street or a place dedicated to public use and not likely to be built upon not less than sixteen feet in width ,

(*b*) a building the back of which abuts on a public street less than sixteen feet in width, if the owner makes a free gift to the Corporation of all land comprised within the site of the building, which falls within eight feet of the centre line of such street as prescribed by the Corporation under rule 3, sub-rule (*6*) , and

(*c*) a building to which rule 24 applies .

Provided that, in cases (*a*) and (*b*), the height of the building shall, in accordance with the provisions of rule 3, be regulated by the width of the public square or street on which it abuts.

(*5*) For the purposes of this rule, the back of a building shall be deemed to be that face of the building which is furthest from any street at the side of which the building is situated :

Provided that, where a building is situated at the side of more than one street, the back of the building shall, unless the Corporation otherwise direct, be deemed to be that face of the building which is furthest from the widest of such streets.

Relaxation of rule 30 in certain cases

**31.** If any person desires to erect a domestic building upon a site which is irregular or of such a nature that it is impracticable to provide an open space in the rear of the building of the dimensions prescribed by

*(Schedule XVII.—Rules as to the use of building-sites and the execution of building-work.—Rule 32.)*

rule 30, the Corporation may relax the provisions of that rule—

Provided that—

(*a*) such open space shall be left as the Corporation may consider practicable, having regard to all the circumstances of the case; and

(*b*) not more than two-thirds of the total area of the site shall be occupied by buildings.

Open space a sides of building

**32.** (*1*) Except in the case of buildings to which rule 24 applies, if either side of a domestic building is not attached to the adjacent building, and if such side does not abut on a public square or street which is not less than six feet in width, or on a private street or partition passage which, in the opinion of the Corporation, is likely always to be kept open to the sky and which is not less than eight feet in width, there shall be between the buildings an open space extending along the entire length of such side and forming part of the side of the said domestic building.

Provided that attachment of any building to the adjacent building shall not be allowed (except with the permission of the Corporation) in areas declared for the purpose if either of the buildings is a dwelling-house.

(*2*) The minimum distance across such space from every part of the said domestic building to the boundary line of the land or building immediately opposite such part shall be—

(*a*) six feet, if there is a building next to such boundary line or within two feet of it, or

(*b*) four feet, if there is an open space of two feet or more on the other side of such boundary line:

Provided that where there is a public street by the side of the site which is less than six feet wide, the owner may, by giving to the Corporation free of charge such land as will make the street six feet wide, be exempted from leaving further side space under this rule,

(*3*) Notwithstanding anything contained in this rule, where a site adjacent to the site of a proposed building is not occupied by a masonry building situated within ten feet of the boundary line between the two sites and within twenty-four feet from the frontage of the street on which the two sites abut, the proposed building may, with the sanction of the Corporation, be erected along the said boundary line up to a depth of twenty-four feet from such street frontage, unless, in the opinion of the Corporation, there is any objection to any building which may be subsequently erected on the adjacent site being attached to the building so erected.

*(Schedule XVII.—Rules as to the use of building-sites and the execution of building-work.—Rules 33—37.)*

Court-yards and outward open spaces to be raised and kept open

**33.** (*1*) Every court-yard of a building, and every open space prescribed by rule 30 or rule 32, shall be raised at least one foot above the level of the centre of the nearest street, so as to admit of easy drainage into the street.

(*2*) Every such court-yard and open space shall form part of the site of the building, shall be open to the sky throughout its entire width and shall be kept accessible for the purpose of cleansing; and no structure shall be erected within or above, or so as to project over, the same

Provided that—

(*a*) a one-seated or two-seated connected-privy or a privy with a bath-room attached thereto or two connected-privies, not exceeding forty square feet in floor-area in the aggregate, exclusive of walls, may be erected in the open space left under rule 30, sub-rule (*2*); and

(*b*) such privy or privies with attached bath-room may have as many storeys over them as there are storeys in the house to which they belong, each of such storeys being connected with the main building by a gangway, or in the case of two separate privies two gangways or bridges, not more than three feet in width for each privy and not exceeding six feet in width in the aggregate.

(*3*) The provisions of sub-rule (*2*) shall apply only to the minimum area prescribed under this schedule for any court-yard or open space referred to in the said sub-rule.

Paving and draining of court-yards and open spaces

**34.** All court-yards in a domestic building, and all other open spaces therein not exceeding six feet in width, shall be paved with some impermeable substance and drained to the satisfaction of the Corporation.

Space to be added to street not to be taken into account under rules 23, 24, 30 and 32

**35.** Except with the permission of the Corporation, for the purpose of calculating the open space required to be left under rules 23, 24, 30 and 32, no space which falls within the alignment of a street or is included within the alignment of a projected public street shall be taken into account.

Open space prescribed for one site not to be taken for another site.

**36.** No building shall at any time be erected on any open space prescribed under this schedule for a building and forming part of the site thereof, nor shall such open space be taken into account in determining the area of any open space required, under this schedule, for any other building.

Position of privies in a domestic building

**37.** No room other than a bath-room, privy or urinal shall be placed over a privy in a domestic building, and no privy shall be placed in a domestic building under any room other than a bath-room, privy or urinal.

*(Schedule XVII—Rules as to the use of building-sites and the execution of building-work—Rules 38—43.)*

*Part V.—Buildings of the warehouse class.*

Height of buildings of the warehouse class.

**38.** (1) In applying rule 3, sub-rule (*1*), to any building of the warehouse class situated in a locality in which the erection of buildings of the warehouse class is allowed by declaration under clause (*d*) of sub-section (*1*) of section 324, the said sub-rule shall be read as if fifty-six-and-a-half degrees were substituted for forty-five degrees.

(*2*) Sub-rule (*2*) of rule 3 shall not apply to any such buildings.

Open spaces for buildings of the warehouse class

**39.** The provisions of rules 29 to 36 as to domestic buildings shall have effect in the case of buildings of the warehouse class which are not situated in a locality in which the erection of buildings of the warehouse class is allowed by declaration under clause (*d*) of sub section (*1*) of section 324.

Floors of certain buildings of the warehouse class

**40.** The floor of every building of the warehouse class intended to be used for the manufacture or storage of articles for human consumption shall be constructed of some impermeable material approved by the Corporation

Additional open space for buildings of the warehouse class for loading or unloading carts

**41.** (*1*) Every building of the warehouse class shall, in addition to any open space prescribed under rule 39, have attached thereto, for the accommodation and passage of carts used for the loading and unloading of goods, an open space, forming part of the site of the building, of such size as the Corporation may consider sufficient, regard being had to the dimensions of the building and the nature and extent of the business to be carried on therein:

Provided that, if the Corporation consider that any court-yard, or any open space provided in pursuance of rule 39, is sufficient for the accommodation and passage of such carts, no separate space need be provided under this rule.

(*2*) Except with the permission of the Corporation no structure which would impede the passage of carts shall be erected within or above, or so as to project over any open space provided under this rule.

*Part VI.—Public buildings.*

Application of certain provisions of Part IV to public buildings

**42.** (*1*) The provisions of rules 25, 26, 27, 28, 30, 31, 32, 34, 35 and 37, as to domestic buildings, shall have effect in the case of public buildings.

(*2*) The provisions of rules 23, 24 and 29, as to dwelling-houses, shall have effect in the case of any public building which is constructed, used or adapted to be used wholly or principally for human habitation, or as a school, college or other place of instruction.

Use of incombustible or fire-resisting materials.

**43.** The floors of the lobbies, corridors, passages and landings of a public building shall be constructed of incombustible materials, the doors shall be constructed of fire-resisting materials, and the flights of stairs shall be constructed either of incombustible materials or of fire-resisting materials

*(Schedule XVII.—Rules as to the use of building-sites and the execution of building-work.—Rules 44—47.)*

Materials to be deemed incombustible

**44.** The following materials shall, for the purposes of rule 43, be deemed to be incombustible, namely :—

(*a*) brick-work constructed of good bricks, well-burnt, hard and sound, properly bonded and solidly put together with—

(*i*) good mortar compounded of good lime and sharp clean sand, hard clean broken brick, broken flint, grit or slag well pulverized, or

(*ii*) good cement mixed with any of the materials mentioned in sub-clause (*i*),

(*b*) granite and other stone which is suitable for building purposes by reason of its solidity and durability,

(*c*) iron, steel and copper,

(*d*) slate, tiles, bricks and terra-cotta, when used for coverings or corbels,

(*e*) flag-stones when used for floors over arches, if not exposed on the underside and if not supported at the ends only,

(*f*) concrete, composed of broken brick, stone chippings or selected slag and lime, cement or calcined gypsum—when the concrete is used for filling-in between joists of floors to a depth of not less than four inches, and

(*g*) any combination of concrete, steel or iron or any other material approved in this behalf from time to time by the Executive Officer

Materials to be deemed to be fire-resisting but not incombustible

**45.** The following materials shall, for the purposes of rule 43, be deemed to be fire-resisting, but not incombustible, namely :—

(*a*) *sal*, teak and other hard timber, when used for beams or posts or in combination with iron, the timber and the iron (if any) being protected by plastering in cement or other incombustible or non-conducting external coating,

(*b*) in the case of doors, *sal*, teak or other hard timber not less than one-and-a-half inches thick, and

(*c*) in the case of staircases, *sal*, teak or other hard timber, the treads and risers being not less than one inch and-a-half thick.

Walls for staircases

**46.** The walls supporting or enclosing any staircase in a public building shall be of masonry and not less than ten inches thick.

Uniformity in treads and risers in staircases.

**47.** The treads and risers of each flight of stairs in a public building shall be of uniform width.

*(Schedule XVII.—Rules as to the use of building-sites and the execution of building-work.—Rules 48—52.)*

Width of staircases, internal corridors and passage-ways

**48.** (*1*) No staircase, internal corridor or passage-way in a public building shall be less than six feet wide:

Provided that, where not more than two hundred persons are to be accommodated in any public building, any staircase, internal corridor or passage-way may be of any width not less than four feet six inches.

(*2*) Every staircase, internal corridor or passage-way in a public building, which communicates with any portion of the building intended for the accommodation of more than four hundred persons, shall be wider than six feet by six inches for every hundred persons over four hundred, subject to a maximum width of nine feet.

(*3*) Notwithstanding anything contained in sub-rule (*1*) and sub-rule (*2*), instead of a single staircase, corridor or passage-way of the width prescribed by sub-rule (*2*), there may be two staircases, corridors or passage-ways, each being of a width equal to at least two-thirds of the width so prescribed.

Division of wide staircase by hand-rail

**49.** If the width of any staircase in a public building is eight feet or more, the staircase shall be divided by a hand-rail.

Separate means of exit from floors on different levels

**50.** If some of the persons accommodated in a public building are placed on a higher floor than others, separate means of exit, of the width prescribed by rule 48, sub-rules (*1*), (*2*) or (*3*), as the case may be, and communicating directly with a public street or an open space, shall be provided for each floor:

Provided that this rule shall not apply to a hotel or lodging-house, or to any public building which is used as a home, refuge or shelter.

Doors and barriers to open outwards

**51.** All doors and barriers in a public building shall be made to open outwards, and no locks or bolts for closing the same from outside shall be affixed thereto.

*Part VII.—Applications for permission to erect new buildings (other than huts).*

Application to Corporation for permission to erect a masonry new building

**52.** (*1*) Every person who intends to erect a new building (other than a hut) shall send to the Corporation an application for permission to execute the work, together with a site-plan of the land, a plan of the whole building, separate plans of each floor of the building, complete elevations and sections of the work and a specification of the work.

(*2*) Every document referred to in sub-rule (*1*) shall contain the particulars and be prepared in the manner hereinafter in this part prescribed in this behalf.

*(Schedule XVII.—Rules as to the use of building-sites and the execution of building-work.—Rule 53.)*

Particulars to be furnished in and with, such application

**53.** (*1*) Every application made under rule 52 shall be written on a printed form (to be supplied by the Corporation free of charge), and shall state the position of the site, the number assigned to it in the assessment-book and its dimensions, the description of the building and its dimensions, and such other particulars as may be prescribed by the Corporation

(*2*) The site-plan sent with such an application shall be drawn to a scale of not less than one-fiftieth of an inch to the foot, shall be sent in triplicate, and shall show—

(*a*) the boundaries of the site and of any contiguous land belonging to the owner thereof ;

(*b*) the position of the site in relation to neighbouring streets ;

(*c*) the name of the street in which the building is proposed to be situated ,

(*d*) all existing buildings standing on the site ;

(*e*) the position of the building, and of all other buildings (if any) which the applicant intends to erect upon his contiguous land referred to in clause (*a*), in relation to—

(*i*) the boundaries of the site, and in a case where the site has been partitioned, the boundaries of the portion owned by the applicant and also of the portions owned by the other owners,

(*ii*) all adjacent streets, buildings and premises within a distance of forty feet of the site and of the contiguous land (if any) referred to in clause (*a*), and

(*iii*) (if there is no street within a distance of forty feet of the site) the nearest existing street or some street projected under section 308 or sanctioned under section 314 ;

(*f*) the means of access from the street to the building, and to all other buildings (if any) which the applicant intends to erect upon his contiguous land referred to in clause (*a*) ;

(*g*) the position and the number of storeys of all other buildings within forty feet of the site ;

(*h*) the position, form and dimensions of kitchens, staircases, privies, urinals, drains, cesspools, stables, cattle-sheds, cow-houses, wells and other appurtenances of the building ;

(*i*) free passage or way in front of the building ;

*(Schedule XVII.—Rules as to the use of building-sites and the execution of building-work.—Rule 53.)*

(*j*) space to be left about the building to secure a free circulation of air, admission of light and access for scavenging purposes;

(*k*) the width of the street (if any) in front, and of the street (if any) at the side or rear, of the building; and

(*l*) such other particulars as may be prescribed by the Corporation.

*Explanation to clause* (*d*)—If it is intended to demolish or alter any existing building on the site, such building shall be particularly specified, and it shall be expressly stated in the aforesaid application that the applicant undertakes to demolish or alter the same, as the case may be

(*3*) The plans of the building and the elevations and sections accompanying such an application shall be properly coloured and neatly and accurately drawn to a scale of not less than one-eighth of an inch to the foot and shall be sent in triplicate; and the said plans shall show—

(*a*) the levels and width of the foundation of the building;

(*b*) the level of the lowest floor of the building; and

(*c*) the level of all court-yards and open spaces, and the plinth-level of the building, with reference to the level at the centre of the nearest street.

(*4*) The specification accompanying such an application shall comprise full information as to the following particulars, namely—

(*i*) the materials and method of construction to be used for external walls, party walls, foundations, roofs, floors, fire-places and chimneys;

(*ii*) the manner in which roof and house drainage and the surface drainage of land will be disposed of;

(*iii*) the manner (if any) in which it is proposed to pave the court-yards and open spaces, and the slope to which the surface is to be made in each case;

(*iv*) the means of access that will be available to scavengers to get to service-privies;

(*v*) the purpose for which it is intended to use the building;

(*vi*) if the building is intended to be used as a dwelling-house for two or more families, or as a place for carrying on any trade or business in which more than twenty people may be employed, or as a place of public resort,—the means of ingress and egress to and from such building; and

(*vii*) such other particulars as may be prescribed by the Corporation.

*Explanation to clause* (*v*)—If it is intended to use the building or any part thereof for any of the purposes specified in Schedule XIX, or as a stable, cattle-shed or cow-house, the fact shall be expressly stated.

*(Schedule XVII.—Rules as to the use of building-sites and the execution of building-work.—Rules 54—56.)*

Signature of plans, elevations and sections

**54.** The plans, elevations and sections referred to in rule 52 shall be signed clearly and in a prominent place by the owner of the building and by the licensed building surveyor who has prepared the same as required by section 323.

Necessary employment of licensed building surveyor or other competent person to supervise building.

**55.** (*1*) Every person who intends to erect a new building (other than a hut) which is likely, in the opinion of the Corporation, to cost not less than fifty thousand rupees, or such other amount as may be fixed from time to time by the Corporation, shall employ a licensed building surveyor, or any other competent person who is approved by the Corporation, to supervise the erection of such building.

(*2*) The name of the person to be so employed shall be stated in the application made, under rule 52, in respect of such building

(*3*) If the person to be so employed is not a licensed building surveyor, the Corporation may, within seven days of the receipt of the said application, refuse to approve his employment, and may return the application for amendment,

and such application shall thereupon be deemed not to have been made until it has been re-submitted duly amended.

(*4*) If the person so employed dies or ceases to be so employed before the completion of the said building, the further erection of the same may be continued for a period of a fortnight, but shall then be suspended until—

(*a*) a licensed building surveyor whose name shall forthwith be reported to the Corporation, or

(*b*) any other competent person approved by the Corporation,

has been employed to supervise such erection.

Formulation of requirements and objections

**56.** (*1*) All information and documents which it may be found necessary to require, and all objections which it may be found necessary to make before deciding whether permission to erect a new building (other than a hut) should be given, shall be respectively required and made in one requisition, and the applicant shall be apprised thereof at the earliest possible date.

(*2*) Within fifteen working days after the receipt of any application under rule 52 for permission to execute any work, the Corporation may require the applicant—

(*i*) to furnish them with any information on matters referred to in that rule which has not already been given in the documents received thereunder, or with any document prescribed by that rule which has not been sent in ; or

(*ii*) to satisfy them in regard to any objections which may have been taken under these rules to the grant of permission to execute the work.

*(Schedule XVII.—Rules as to the use of building-sites and the execution of building-work.—Rules 57—59.)*

(3) If any information or documents furnished under sub-rule (2) are, in the opinion of the Corporation, incomplete or defective, they may, within fifteen working days after the receipt of the same, require further information or documents to be furnished.

(4) If any requisition made under sub-rule (2) or sub-rule (3) is not complied with within three months, the application received under rule 52 shall be refused.

Permission to execute work when to be given or refused by the Corporation

**57.** (1) Within fifteen days after the receipt of any application made under rule 52 for permission to execute any work, or of any information or documents or further information or documents required under this schedule, or within fifteen days after the Corporation have been satisfied that there are no objections which may lawfully be taken to the grant of permission to execute the work,

the Corporation shall, by written order, either—

(a) grant permission conditionally or unconditionally to execute the work, or

(b) refuse, on one or more of the grounds mentioned in rule 59 or rule 63, as the case may be, to grant such permission.

(2) When the Corporation grant permission conditionally under clause (a) of sub-rule (1), they may in regard thereto impose such conditions, consistent with this Act, as they may think fit.

(3) Notwithstanding anything contained in sub-rules (1) and (2), in any case in which it appears to the Corporation that any public improvements which may render necessary the acquisition of the site of a proposed building or any part thereof are desirable and expedient, they may withhold sanction to the building plans submitted in respect of such building for a period not exceeding three months from the date of such submission.

Remedy if Corporation delay grant or refusal of permission

**58.** If within the period prescribed by rule 57, the Corporation have neither granted nor refused to grant permission to execute any work, such permission shall be deemed to have been granted; and the applicant may proceed to execute the work, but not so as to contravene any of the provisions of this Act or of any rules or by-laws made thereunder.

Grounds on which permission to erect a masonry new building may be refused

**59.** The only grounds on which permission to erect a new building (other than a hut) may be refused are the following namely:—

(1) that the work, or any of the particulars comprised in the site-plan, building-plans, elevations, sections or specification would contravene some specific provision of this Act or some specific order, rule or by-law made thereunder;

(2) that the application for such permission does not contain the particulars or is not prepared in the manner prescribed in this schedule;

*(Schedule XVII.—Rules as to the use of building-sites and the execution of building-work.—Rules 60—64.)*

(3) that, in the case of a new building (other than a hut) falling within the street alignment or building-line of a public street projected under section 63 of the Calcutta Improvement Act, 1911, the permission of the Chairman of the Board of Trustees for the Improvement of Calcutta has not been obtained; Ben Act V of 1911

(4) that any of the documents referred to in rule 52 have not been signed as prescribed in rule 54;

(5) that any information or documents required by the Corporation under this schedule have not been duly furnished; or

(6) that the applicant has not satisfied the Corporation in regard to any objections which may have been taken under these rules to the grant of the said permission.

Signature of approved plans

**60.** When the Corporation have given permission to execute any work, the approved plans of the work shall be signed by such officer and in such manner as they may direct.

Retention of plan and submission of fresh application, after refusal to permit execution of work.

**61.** When permission to erect a new building (other than a hut) is refused,—

(a) the Corporation shall retain one copy of the plans submitted, and shall without charge furnish the applicant with their reasons for such refusal, in writing, and

(b) the applicant may at any time thereafter send to the Corporation a fresh application and fresh or modified documents under rule 52 framed with the object of meeting the objections for which such permission was refused.

Work not to be commenced unless and until permission given

**62.** Subject to the provisions of rule 58, the erection of a new building (other than a hut) shall not be commenced unless and until the Corporation have granted written permission for the execution of the work on an application sent to them under rule 52.

Special powers to Corporation to suspend or grant permission to erect a masonry building or convert huts, etc., into a masonry buildings.

**63.** Notwithstanding anything contained in rule 59—

(a) if any street shown in the site-plan is an intended private street, the Corporation may, in their discretion, refuse to grant permission to erect a masonry building or to convert one or more huts or temporary structures into a masonry building until the street is commenced or completed, and

(b) the Corporation may for special reasons grant permission to erect a masonry building, or to convert one or more huts or temporary structures into a masonry building, on any site without reference to its position in relation to any street.

Lapse of permission, if not acted upon within three years, or, if granted before a certain date, except in certain circumstances.

**64.** (1) If the erection of any new building (other than a hut) is not commenced, and a substantial portion of it is not completed, within three years after the date on which permission was given to execute

(*Schedule XVII.—Rules as to the use of building-sites and the execution of building-work.—Rules 65—67.*)

the work, the work shall not be commenced or continued until a fresh application has been made and a fresh permission granted under this schedule.

(2) At any time before the expiry of three years from the date on which such permission was given, the person to whom it was granted may apply to the Corporation for a certificate that the building has been commenced and a substantial portion of it already completed; and the Corporation shall thereupon cause the said building to be inspected, and if they consider that a substantial portion of it has been completed, they shall grant a certificate to that effect.

(3) If any masonry building, permission to erect which was granted before the commencement of this Act, is not wholly completed within three years from the commencement of this Act, the said permission shall be deemed to have lapsed, and any work done thereunder, after the said three years, shall be deemed to have been done without permission:

Provided that the Corporation may, for special reasons, extend the said period of three years.

Power to Corporation to cancel permission on the ground of material misrepresentation by applicant

**65.** If, at any time after permission to erect any masonry building has been given, the Corporation are satisfied that such permission was granted in consequence of any material misrepresentation or fraudulent statement contained in the application made under rule 52, or in the plans, elevations, sections or specifications submitted therewith in respect of such building, they may cancel such permission, and any work done thereunder shall be deemed to have been done without permission

## *Part VIII.—Huts.*

Continuous lines.

**66.** (1) Huts in a *bustee* shall be built in continuous lines, in accordance with an alignment to be prescribed by the Corporation and demarcated on the ground, after hearing the objections (if any) of the owner of the *bustee* and the owners of the huts affected by the alignment.

(2) If the Corporation are of opinion that huts in a *bustee* are likely to be erected hereafter on any vacant land they may, after hearing the objections (if any) of the owner of the land and the owners of the huts affected by the alignment,—

(*a*) prescribe alignments for huts on such land, and

(*b*) from time to time alter such alignments.

Distance between eaves and alignment

**67.** When an alignment has been prescribed under rule 66, no hut shall be erected so that the distance measured from its eave to such alignment is less than six feet.

*(Schedule XVII.—Rules as to the use of building-sites and the execution of building-work.—Rules 68—76.)*

Use of spaces referred to in rule 67

**68.** All spaces referred to in rule 67 between a hut and an alignment, shall remain private property, subject to a right in the Corporation to use them for the purposes of scavenging or for any of the other purposes of this Act :

Provided that, notwithstanding anything contained in the Indian Limitation Act, 1908, no such use shall, by reason of any lapse of time, be held to confer any right on any person so as prejudicially to affect the rights of the owner of the *bustee*. IX of 1908

Erection of huts in a *bustee* in court-yard formation

**69.** Notwithstanding anything contained in rule 66 or rule 67, huts in a *bustee* may, with the special sanction of the Corporation, be erected so as to form an open court-yard comprising at least one-fourth of the whole area occupied by the huts and court-yard :

Provided that no hut erected under this rule shall contain more than one-storey.

Area of court-yard in huts not in a *bustee*

**70.** Where huts other than huts in a *bustee* are erected so as to form an open court-yard, the area of the court-yard shall not be less than one-fourth of the area occupied by the huts and court-yard.

Space between huts

**71.** There shall be between any two huts a space of at least three feet, measured from eave to eave.

Distance of huts from metalled and sewered street

**72.** Except with the sanction of the Corporation, no hut shall be placed at a greater distance than one hundred feet from the nearest part of a metalled and sewered street, unless there be a municipal or *bustee* drain at a distance of not more than twenty feet from the site of such hut.

Distance between hut and masonry building

**73.** Except with the sanction of the Corporation, no portion of a hut shall be placed within six feet of a masonry building :

Provided that this rule shall not preclude the erection of huts in the compound of a masonry building in any case where masonry out-offices would be permissible.

Distance between hut and cow-house, etc

**74.** No hut used for human habitation shall be placed within six feet of a cow-house, cattle-shed or stable.

Prohibition of projections or dropping of water over street or passage.

**75.** Every hut abutting on a street or passage, whether public or private, shall be constructed so as not to project over, or admit of water from the roof falling upon, or injuring, such street or passage.

Height

**76.** No hut shall comprise more than two-storeys or shall exceed twenty feet in height, measured from the floor level to the junction of the walls with the roof.

*(Schedule XVII.—Rules as to the use of building-sites and the execution of building-work.—Rules 77—81.)*

Plinth

The floor-level of a hut shall be raised at least two feet above the level of the centre of the nearest street or passage, and the floor shall be paved with brick-on-edge, cement, concrete or some similar material approved by the Corporation:

Provided that the floor of a stable or cow-shed may be one foot above such level.

Rooms

**78.** (*1*) The whole of at least one side of every room in a hut shall either be an external wall or abut on an open court-yard or on an open verandah.

(*2*) Every room in a hut, which is intended to be used as an inhabited room, shall—

(*a*) be provided with a doorway of not less than fifteen square feet in area;

(*b*) be provided with a window or windows opening directly into the external air or into an open verandah, and having an opening of not less than one-fifteenth of the floor area of the room;

(*c*) have a superficial area of not less than eighty square feet; and

(*d*) have a height of not less than eight feet measured from the floor-level to the junction of the walls with the roof.

Court-yards

**79.** (*1*) The court-yard (if any) of a hut shall be so raised that the upper surface shall be one foot above the level of the nearest street or passage, and shall be drained into the nearest drain.

(*2*) The width of such court-yard shall be not less than eight feet.

(*3*) Every such court-yard shall be paved with some impermeable material.

*Part IX.—Applications for permission to erect new buildings which are huts.*

Application to be sent, and particulars furnished, to Corporation by person intending to erect a hut

**80.** (*1*) Every person who intends to erect a new building which is a hut on any land shall send to the Corporation—

(*a*) an application for permission to execute the work,

(*b*) a site-plan of the land,

(*c*) plans and sections of the hut, and

(*d*) a specification of the work.

(*2*) Every such application shall contain the particulars and be prepared in the manner prescribed in that behalf in this schedule,

and every such plan, section and specification shall be signed by the licensed building surveyor who has prepared the same as required by section 323.

Application for permission to erect a hut

**81.** (*1*) Every application for permission to erect a new building which is a hut shall be written on a printed form to be supplied by the Corporation free of charge.

*(Schedule XVII.—Rules as to the use of building-sites and the execution of building-work.—Rules 82, 83.)*

(2) If it is intended to use the hut, or any part thereof, for any of the purposes specified in Schedule XIX, or as a stable, cattle-shed, or cow-house, the fact shall be expressly stated in the said application.

(3) The plans sent with such an application shall be drawn to a scale of not less than one-eighth of an inch to the foot, shall include a site-plan drawn to a scale of fifty feet to the inch, shall be properly coloured, shall be sent in triplicate, and shall show—

(i) the hut,

(ii) the privy provided or to be provided for the use of occupants of the hut,

(iii) the position and size of the doors and windows,

(iv) all existing buildings standing on the site,

(v) the means of access to the hut from the street or passage on which it abuts,

(vi) the position of the hut in relation to all huts, streets, passages, privies and tanks within a distance of fifty feet from the site, and

(vii) such other particulars as may be prescribed by the Corporation.

*Explanation to clause (iv)*—If it is intended to demolish or alter any existing building on the site, such building shall be particularly specified and it shall be expressly stated in the aforesaid application referred to in sub-rule (1) that the applicant undertakes to demolish or alter the same, as the case may be.

Power to Corporation to require further information or a proper site plan

**82.** (1) The Corporation may, on receipt of an application under rule 80, require the applicant—

(a) to furnish them with any information on matters referred to in rule 80 which has not already been given in the documents received thereunder, or with a proper site-plan as prescribed by that rule, or

(b) to satisfy them in regard to any objections which may have been taken under these rules to the grant of permission to execute the work.

(2) If any information or plan required under sub-rule (1) is, in the opinion of the Corporation, incomplete or defective, they may require further information or a fresh plan to be furnished.

(3) If any requisition made under sub-rule (1) or sub-rule (2) is not complied with within two months, the application received under rule 80 shall be refused.

Power to Corporation to employ licensed building surveyor to prepare site-plan, etc., for hut.

**83.** The Corporation may—

(a) on the application of any person who intends to erect a new building which is a hut, and

(b) on payment, by such person, of such fees as the Corporation may prescribe in that behalf,

employ a licensed building surveyor to prepare, in respect of such hut, the plans, sections and specifications prescribed by rule 80.

*(Schedule XVII.—Rules as to the use of building-sites and the execution of building-work.—Rules 84—87.)*

Permission to execute work when to be given or refused

**84.** Within fourteen days after the receipt of any application made under rule 80 for permission to erect a new building which is a hut, or of any information or plan or further information or fresh plan required under this schedule, or within fourteen days after the Corporation have been satisfied that there are no objections which may lawfully be taken to the execution of the work, the Corporation shall, by written order, either grant such permission or refuse to grant the same on one or more of the grounds mentioned in rule 86.

Remedy if Corporation delay grant or refusal of permission

**85.** If, within the period prescribed by rule 84, the Corporation have neither granted nor refused to grant permission to erect a new building which is a hut, such permission shall be deemed to have been granted; and the applicant may proceed to execute the work, but not so as to contravene any of the provisions of this Act or any rules or by-laws made thereunder.

Grounds on which permission to erect a hut may be refused

**86.** The only grounds on which permission to erect a new building which is a hut may be refused are the following, namely :—

(*1*) that the work would contravene some specific provision of this Act or some specific order, rule or by-law made thereunder;

(*2*) that the application for such permission does not contain the particulars, or is not prepared in the manner, prescribed in this schedule:

(*3*) that, in the case of a new building which is a hut falling within the street alignment or building-line of a public street projected under section 63 of the Calcutta Improvement Act, 1911, the permission of the Chairman of the Board of Trustees for the Improvement of Calcutta has not been obtained; Ben Act V of 1911.

(*4*) that any plan, section or specification has not been signed as prescribed by rule 80, sub-rule (*2*);

(*5*) that any information or plan required by the Corporation under this schedule has not been duly furnished; or

(*6*) that the applicant has not satisfied the Corporation in regard to any objections which may have been taken under these rules to the grant of the said permission.

Retention of plans, and submission of fresh application, after refusal of permission to erect a hut.

**87.** When permission to erect a new building which is a hut is refused,—

(*a*) the Corporation shall retain one copy of each of the plans, and shall without charge furnish the applicant with their reasons for such refusal in writing, and

(*b*) the applicant may at any time send to the Corporation a fresh application and a fresh or modified plan under rule 80 framed with the object of meeting the objections for which such permission was refused.

*(Schedule XVII.—Rules as to the use of building-sites and the execution of building-work.—Rules 88—92.)*

Work not to be commenced unless and until permission given

**88.** (*1*) Subject to the provisions of rule 85, the erection of a new building which is a hut shall not be commenced unless and until the Corporation have granted written permission for the execution of the work on an application sent to them under rule 80.

(*2*) If any hut, permission to erect which was granted before the commencement of this Act, is not wholly completed within three years from the commencement of this Act, the said permission shall be deemed to have lapsed and any work done thereunder, after the said three years, shall be deemed to have been done without permission.

Lapse of permission, if not acted upon within six months.

**89.** If the erection of any new building which is a hut is not commenced within six months after the date on which permission was given to execute the work, the work shall not be commenced until a fresh application has been made and a fresh permission granted under this schedule.

*Part X.—Application of rules in this schedule to alterations of, and additions to, buildings.*

Relaxation of rule 3

**90.** In applying rule 3 in the case of an alteration of, or addition to, any building, the angle at which the lines referred to in sub-rule (*1*) of that rule are to be drawn shall be fifty-six-and-a-half degrees instead of forty-five degrees:

Provided that nothing contained in this rule shall authorize any addition to a building which would make it higher than any building which, at the commencement of this Act, was standing on the same portion of the site unless it is otherwise permissible under this schedule.

Applicability of rule 30 to alterations and additions above the ground floor

**91.** Rule 30 shall apply to alterations of, or additions to, any domestic building, public building or building of the warehouse class [not situated in a locality in which the erection of buildings of the warehouse class is allowed by declaration under clause (*d*) of sub-section (*1*) of section 321] above the ground-floor, even though the open space required under the said rule has not been left on the ground-floor.

Restriction on application of rules 52 to 65, or 80 to 89

**92.** (*1*) Rules 52 to 65, or rules 80 to 89, as the case may be, shall not be applied in the case of any alteration of, or addition to, a building unless one or more of the following works is or are undertaken, namely:—

(*a*) the construction or re-construction of a roof or an external or party wall,

(*b*) any repairs to the building which involve the re-construction of—

(*i*) a masonry wall,

(*ii*) the floor of a room (excluding the ground-floor),

(*iii*) a lift-shaft, or

(*iv*) a chimney,

after the same has been entirely or in great part demolished,

(*c*) the closing of any door or window in an external wall,

*(Schedule XVII.—Rules as to the use of building-sites and the execution of building-work.—Rule 93.)*

(*d*) the construction of an internal wall or partition,

(*e*) any other alteration of the internal arrangements of a building which affects an alteration of its court-yard or court-yards or its drainage, ventilation or sanitary arrangements, or which affects its security,

(*f*) the addition of any building, room, out-house or other structure,

(*g*) the roofing of any space between one or more walls and buildings,

(*h*) the conversion into more than one place for human habitation of a building originally constructed as one such place,

(*i*) the conversion of two or more places of human habitation into a greater number of such places, or

(*j*) the alteration of a building for the purpose of effecting a partition amongst joint owners.

(*2*) In the case referred to in clause (*g*) of sub-rule (*1*), the said rules 52 to 65, or rules 80 to 89, as the case may be, shall apply only as regards the structure which is formed by roofing a space, and not as regards adjoining buildings.

Grant of provisional permission to proceed with work in cases of urgency

**93.** (*1*) If, in any case of urgency arising from causes beyond his own control, any person desires to undertake without delay any of the works referred to in rule 92, he may send to the Corporation an application for provisional permission to proceed with the work.

(*2*) Such application shall contain an explanation of the urgency and a general description of the work proposed to be undertaken.

(*3*) Within a period of three days after the receipt of any such application, the Corporation shall, by written order, either grant or refuse to grant provisional permission to proceed with the work.

(*4*) If, within the said period of three days, the Corporation have neither granted nor refused to grant such provisional permission, the same shall be deemed to have been granted and the applicant may proceed to execute the work, but not so as to contravene any of the provisions of this Act or of any rule or by-law made thereunder.

(*5*) Whenever such provisional permission is granted, and in any case provided for by sub-rule (*4*), the applicant shall, within fifteen days, send to the Corporation a regular application for permission to execute the work; and if he fails to do so, the provisional permission shall be deemed to be withdrawn.

*(Schedule XVII.—Rules as to the use of building-sites and the execution of building-work.—Rule 94.)*

Power of Corporation to relax certain rules as provided under section 331

**94.** (*1*) Notwithstanding anything contained in this schedule, but subject to the provisions of section 331, the Corporation may at any time, in dealing with any application to erect a new building as defined in sub-clauses (*b*), (*c*) or (*d*) of clause (*46*) of section 3 or to add to, alter, or do any other work referred to in section 330 to, any building erected before the first day of April, 1900, relax, for special reasons to be recorded in writing, the following rules in this schedule in the manner and circumstances specified hereunder, namely :—

(*a*) Rules 30 and 32 may be relaxed so as to prevent the demolition of any material part of any masonry building existing on the space required to be kept open under the said rules :

Provided that—

(*i*) the new building conforms to the other rules of this schedule ; and

(*ii*) in no case shall the height or extent of the buildings on the said space be increased or added to, unless this is otherwise permissible under the said rules.

) Rule 29 may be relaxed provided that the building conforms with the provisions of either rule 23 or rule 30.

(*2*) Notwithstanding anything contained in this schedule, but subject to the provisions of section 331, the Corporation may at any time, in dealing with an application to add to, alter, or do any work referred to in section 330 to, any building erected before the 1st day of April, 1900, relax, for special reasons to be recorded in writing, rule 23, provided that some substantial increase is nevertheless made in the area of the open space belonging to the premises and already forming a part of the site.

## SCHEDULE XVIII.

### RULES FOR THE INSPECTION AND REGULATION OF LAND AND BUILDINGS.

[*See sections 364 (11), 380, 384 and 488.*]

Power to inspect premises for sanitary purposes

**1.** (*1*) The Corporation may cause any building or other premises to be inspected for the purpose of ascertaining the sanitary condition thereof.

(*2*) If the Corporation have reason to believe that any building is used as a public lodging-house or is let out in rooms to twenty-five or more lodgers, such inspection may be made at any time by day or by night:

Provided that no such inspection shall be made by night except by an officer specially authorized by the Health Officer in that behalf.

Power to Corporation to require cleansing and lime-washing of building

**2.** If it appears to the Corporation necessary for sanitary reasons so to do, they may, by written notice, require the owner or occupier of any building inspected under rule 1 to cause the same or any portion thereof to be lime-washed or otherwise cleansed, either externally or internally or both externally and internally.

Power to Corporation to require owner to secure, enclose, cleanse, or clear land or building which is untenanted, filthy or a nuisance.

**3.** If any land or building,—

(*a*) by reason of abandonment or disputed ownership or for any other reason, remains untenanted and thereby becomes a resort of idle and disorderly persons, or

(*b*) is in a filthy or unwholesome state, or

(*c*) is complained of by any two or more of the persons residing in its neighbourhood as a nuisance,

the Corporation, after due inquiry, may give written notice to the owner or to any person who is known or believed to claim to be the owner,

and shall also affix a copy of the said notice on the door of the building or on some conspicuous part of the land, as the case may be,

requiring the said owner or any person who is known or believed to claim to be the owner properly to secure, enclose, cleanse or clear the same or otherwise abate the nuisance.

Power to Corporation to demolish, repair or secure wall, building or fixture in a ruinous state, etc

**4.** (*1*) If any wall or building, or anything affixed thereto, be deemed by the Corporation to be in a ruinous state, or likely to fall, or to be in any way dangerous, they shall forthwith cause a written notice to be served on the owner and also to be put on some conspicuous part of the wall or building or served on the occupier (if any) of the building, requiring such owner or occupier, forthwith to demolish, repair or secure such wall, building or thing as the case may require.

(*2*) The Corporation may also, if it appears to them to be necessary to do so, cause a proper hoarding or fence or other means of protection to be put up at the expense of the owner of such wall or building,

*(Schedule. XVIII.—Rules for the inspection and regulation of land and buildings.—Rules 5—7.)*

for the safety of the public or the inmates thereof: and may also, after giving them such notice as the Corporation may think necessary, require the inmates of the building to vacate it.

(3) The provisions of this Act and of any rules or by-laws made thereunder relating to buildings shall apply to any work done in pursuance, or in consequence, of a notice issued under sub-rule (1).

Power to Corporation to sell materials of buildings demolished in pursuance of notice issued under rule 4

**5.** If any building, or any part of a building, be demolished by the Corporation under section 510 in pursuance of a notice issued under rule 4, they may sell the materials thereof and apply the proceeds of such sale in payment of the expenses incurred, and shall, on demand, restore to the owner any surplus arising from such sale.

Further powers to Corporation with reference to insanitary or congested buildings

**6.** (1) Whenever the Corporation consider—

(a) that any building is, by reason of its having no plinth or having a plinth of insufficient height, or by reason of the want of proper drainage or ventilation, or by reason of the impracticability of cleansing, attended with risk to the health of the occupiers thereof or to the inhabitants of the neighbourhood, or is for any reason likely to endanger the public health, or

(b) that any block of buildings is, for any of the said reasons, or by reason of the manner in which the buildings are crowded together, attended with such risk as aforesaid,

they may cause a written notice to be fixed to some conspicuous part of the building or block, requiring the owners or occupiers thereof, or, at the option of the Corporation, the owners of the land occupied by such building or block, to execute such works or take such measures as the Corporation may deem necessary for the prevention of such risk.

(2) Where any building, or part thereof, in respect of which a notice has been issued under sub-rule (1), has been demolished in pursuance of an order made by a Magistrate under section 364, the Corporation shall pay reasonable compensation to the owner thereof.

Power to Corporation to direct the filling up, etc., of unwholesome wells, pools, etc

**7.** (1) When—

(a) any well, pool, ditch, tank, pond, pit or marshy or undrained ground, or

(b) any cistern, reservoir or water-butt or any other receptacle or place where water is stored or accumulates, or

(c) any waste or stagnant water, whether within any private enclosure or not,

appears to the Corporation to be or to be likely to become injurious to health or offensive to the neighbourhood or in any other respect a nuisance, they may, by written notice, require the owner or occupier of the land or building to which such well, pool, ditch, tank, pond, pit, ground, cistern, reservoir, water-butt, receptacle, place or water pertains,

*(Schedule XVIII.—Rules for the inspection and regulation of land and buildings.—Rules 8, 9.)*

to cleanse or to fill up the same with suitable material or to drain off or remove water therefrom or to make such other order therewith as the Corporation may deem necessary.

(2) Where, in the opinion of the Health Officer, such well, pool, ditch, tank, pond, pit, ground, cistern, reservoir, water-butt, receptacle, place or water is or is likely to become a breeding place for mosquitoes, he may enter upon the premises to which it pertains and take such steps as he thinks proper to cleanse the same.

(3) If the Corporation, in exercise of the powers conferred by section 510, execute any work referred to in a notice issued under sub-rule (1), and if the person liable to pay the expenses of such work fails to pay the same, the Corporation may, until such expenses are paid,—

(i) lease any part of the land used in connection with the said well, pool, ditch, tank, pond, pit, cistern, reservoir, water-butt, receptacle, place or water, or any part of the said ground, as the case may be, or

(ii) retain possession of the same, or the site thereof, and utilize it for public purposes.

(4) If the said expenses be paid by an occupier of land, he may, in the absence of any agreement to the contrary, deduct the same from any rent due to the owner of the land.

Power to Executive Officer to take action in case of a serious nuisance affecting the public health.

**8.** On receipt of a written report from the Health Officer of the existence of a serious nuisance likely to affect the public health or to prove offensive to the neighbourhood, the Executive Officer may take immediate action for the abatement or removal of such nuisance.

Power to Corporation to regulate excavations

**9.** (1) The Corporation may, by a general order, or by an order to affect such portion of Calcutta as may be specified therein, prohibit—

(a) the making of excavations for the purpose of taking earth therefrom, or of storing rubbish or offensive matter therein, and

(b) the digging of cesspools, tanks, ponds, wells or pits, without the special permission of the Corporation

(2) Every such order shall be published in the *Calcutta Gazette.*

(3) No person shall make any excavation referred to in clause (a) of sub-rule (1), or dig any cesspool, tank, pond, well or pit, in contravention of any such order.

(4) If any such excavation, cesspool, tank, pond, well or pit is made or dug after the publication of any such order and without the permission required thereby, the Corporation may, by written notice, require the owner or occupier of the land on which the same is made or dug to fill it up with earth or other material approved of by the Corporation.

## SCHEDULE XIX.

### CERTAIN PURPOSES FOR WHICH PREMISES MAY NOT BE USED WITHOUT A LICENSE.

[*See sections 386, 389, 494 and 495, and Sc[illegible] rules 53 (4) and 81 (2).*]

(1) Casting metals.
(2) Manufacturing bricks, pottery or tiles
(3) As a knacker's yard.
(4) As a hide godown or hide screw-house.
(5) As a manufactory or place of business from which offensive or unwholesome smells, fumes, or dust arise.
(6) As a depôt for hay, straw, wood, coal, coke, waste-paper or rags.
(7) Packing, pressing, cleansing, preparing or manufacturing, by any process whatever, any of the following articles, namely :—

| | |
|---|---|
| cloths or threads in indigo or other colours, | pottery, |
| paper, | silk |

(8) Storing, packing, pressing, cleansing, preparing or manufacturing, by any process whatever, any of the following articles, namely :—

| | |
|---|---|
| blasting powder, | lampblack, |
| blood, | leather, |
| bones, | lime, |
| brass, | manure, |
| candles, | matches for lighting, |
| catgut, | meat, |
| chemical preparations, | molasses, |
| china grass, | nitro-glycerine, |
| cocoanut fibre, | offal, |
| cotton (other than cotton pressed into bales), or cotton refuse or seed, | oil (edible or non-edible), |
| dammer (resin or rosin), | oil-cloth, |
| dynamite, | paint, |
| fat (edible or non-edible), | pakra seed, |
| fins, | pitch, |
| fireworks, | rags, |
| fish, | rosin, |
| flax, | saltpetre, |
| flour, | skins, |
| fulminate of mercury, | soap, |
| gas, | soap-stone, |
| glue, | spirits, |
| grain, | steel. |
| gun-cotton, | sugar, |
| gun-powder, | sulphur, |
| hair, | *surki*, |
| hemp, | tallow, |
| hides, | tar, |
| hoofs, | tin, |
| horns, | tobacco, |
| iron, | tow, |
| jute, | turpentine, |
| kaslin, | varnish, |
| | verdigris, |
| | waste-paper, |
| | wool. |

## SCHEDULE XX.

### FORM OF CERTIFICATE

(*See sections 423 and 425.*)

To[1]

I, the undersigned, public analyst for the do hereby certify that I received on the day of 19 , from[2] a sample of for analysis (which then weighed[3] ) and have analysed the same and declare the result of my analysis to be as follows:—

I am of opinion that the same is a sample of

*Observations*[4]

Signed this day 19 .

A B

at

---

[1] Here insert the name of the person submitting the article for analysis

[2] Here insert the name of the person delivering the sample If the sample is received by post or by railway, entry should be made accordingly

[3] When the article cannot be conveniently weighed, this passage may be erased or the blank may be left unfilled

[4] Here the analyst may insert, at his discretion, his opinion as to whether the mixture (if any) was for the purpose of rendering the article potable or palatable, or of preserving it, or of improving the appearance, or was unavoidable, and may state whether it was in excess of what is ordinary or otherwise

NOTE.—In the case of a certificate regarding milk, butter or any article liable to decomposition, the analyst shall specially report whether any change had taken place in the constitution of the article that would interfere with the analysis

## SCHEDULE XXI.

### REGISTRATION OF BIRTHS.

*(See sections 450 and 451.)*

*19 . Births in the district of .*

| 1 | 2 | 3 | 4 | 5 | 6 | 7 | 8 | 9 | 10 | 11 |
|---|---|---|---|---|---|---|---|---|---|---|
| Serial number. | Date of birth | Place of birth | Nationality or caste | Name, if any. | Sex | Name of father | Profession of father. | Signature, description and residence of informant | Date of registration | Signature of Registrar. |

## SCHEDULE XXII.

### REGISTRATION OF DEATHS.

*(See sections 450, 452, 453 and 455.)*

*19 . Deaths in the district of .*

| 1 | 2 | 3 | 4 | 5 | 6 | 7 | 8 | 9 | 10 | 11 | 12 | 13 | 14 |
|---|---|---|---|---|---|---|---|---|---|---|---|---|---|
| Serial number. | Date of death. | Nationality or caste | Name | Sex | Age | Profession | Cause of death | Name of medical attendant (if any) during last illness. | Residence at time of death. | Residence previous to last illness | Signature, description and residence of informant. | Date of registration. | Signature of Registrar |

## SCHEDULE XXIII.

FORM OF NOTICE TO BE ISSUED ON YELLOW PAPER AND AFFIXED ON PREMISES WHEN OTHER [illegible] OF SERVICE NOT AVAILABLE

*(See sections 504 and 505.)*

To (*name and address*)

[*or*, to the owner or occupier of (*number of building or description of land and number of premises in assessment-book*).]

Take notice that a bill (*or, as the case may be*) has been issued against you to the following effect (*state the substance of the document*) and that you are required to (*state the requirement as mentioned in the document*).

*Dated this day of*

(*Signature of municipal officer or other person issuing the notice.*)

C. TINDALL,

*Secretary to the Government of Bengal and Secretary to the Bengal Legislative Council*

**REGISTERED No. C207.** **No. 29 of 1923.**

# The Calcutta Gazette

WEDNESDAY, JULY 18, 1923

## SUPPLEMENT.

### *Official Papers.*

[*Non Subscribers to the* GAZETTE *may receive* SUPPLEMENT *separately on payment of five rupees per annum if delivered in Calcutta, or seven rupees and eight annas if sent by post*]

CONTENTS


| | Page. |
|---|---|
| Approximate return of traffic on the Circular and Eastern Canals for the week ending Saturday, the 7th July 1923 | 853 |
| Statement showing the daily gauge readings of certain rivers for the week ending 12th July 1923 | 854—860 |
| List of Government Promissory Notes in the custody of the Controller of Currency on the 31st December 1922 | 861—987 |
| Abstract statement showing tollage on Canals in Bengal classed as Major and Minor Works for the month of May 1923 | 988 |
| Calcutta University Budget Estimates, 1923-24 | 989—1029 |
| Calcutta Improvement Trust | 1030—1057 |
| Vital Statistics of the Towns of Bengal for the weeks ending 30th June and 7th July 1923 | 1058—1059 |
| Statement of weekly gauge-readings on the rivers in Bengal | 1060 |
| Weather and Crop Report for the week ending on the 11th July 1923 | 1061—1064 |
| Prices current (wholesale and retail) of food grains and salt, etc. in the districts of Bengal for the second half of June 1923 | 1065—1070 |
| Statement of weekly gauge readings on the rivers in Bengal | 1071 |


## GOVERNMENT OF BENGAL, IRRIGATION DEPARTMENT.

***Approximate return of traffic on the Circular and Eastern Canals for the week ending Saturday, the 7th July 1923, as compared with the corresponding week of the previous year.***

| Nature of cargo | Week ending Saturday, the 7th July 1923. | | | Week ending Saturday, the 8th July 1922 | | |
|---|---|---|---|---|---|---|
| | Number of boats | Weight of cargo | Tollage | Number of boats | Weight of cargo | Tollage |
| | | Mds | Rs | | Mds | Rs. |
| Rice and paddy ... ... | 173 | 43,410 | 664 | 260 | 42,480 | 654 |
| Jute ... ... .. | 8 | 11,650* | 88 | 37 | 26,675† | 227 |
| Firewood ... | 51 | 27,750 | 405 | 63 | 35,925 | 546 |
| Other articles ... .. | 885 | 246,920 | 2,873 | 895 | 298,195 | 2,758 |
| Total . | 1,117 | 329,710 | 4,030 | 1,255 | 403,275 | 4,185 |
| Empty boats and rafts ... | 424 | .. | 1,810 | 393 | ... | 1,392 |
| GRAND TOTAL ... | 1,541 | 329,710 | 5,840 | 1,648 | 403,275 | 5,577 |

| | Mds |
|---|---|
| * Weight by canal measurement | 11,623 |
| † Ditto ditto | 27,762½ |

*N.B.*—It is intended to discontinue publishing this information, unless some one protests, from 1st August 1923

T. C. BHATTACHARYA,
*Assistant Secretary to the Government of Bengal.*

CALCUTTA, *the 12th July 1923.*

**Statement showing the daily gauge readings of certain rivers at the stations named below for the week ending Thursday, the 12th July 1923.**

| Name of river and place where readings are taken | | Date. | Hour | Reading on gauge | Value of zero referred to P. W. D datum | Height above P. W. D datum | Compared with previous day's height | | Height above P. W. D datum on same date in— | | Remarks |
|---|---|---|---|---|---|---|---|---|---|---|---|
| | | | | | | | Rise | Fall | 1922 | 1921 | |
| Ganges ... | Monghyr ... | 6th July 1923 | 6 A.M. ... | 110·00′ | 0 00′ | 110·00′ | 0 30′ | ... | 113·30′ | 113 40′ | |
| | Rajmahal ... | 6th „ „ | 6 „ ... | ... | 56 319′ | ... | ... | ... | 73 619′ | 73 519′ | |
| | Goalundo ... | 6th „ „ | 8 hours ... | 21 30′ | 4·896′ | 26 196′ | 0·40 | ... | 25·596′ | 27 296′ | |
| Brahmaputra ... | Gauhati ... | 6th „ „ | 8 A.M. ... | 22·10′ | 135·18′ | 157 28′ | 0·20 | ... | 161·08′ | 162·08′ | |
| | Serajganj ... | 6th „ „ | 12 hours ... | 36 55′ | 1·509′ | 38 059′ | 0·35′ | ... | 40·409′ | 41·109′ | |
| | Dibrugarh ... | 6th „ „ | 9 A.M. ... | 19·90′ | 314·18′ | 334 08′ | ... | 0·10′ | 335·18′ | 333·68′ | |
| Meghna ... | Bhairab Bazar | 6th „ „ | 6 hours ... | 17·33′ | 1 61′ | 18 94′ | ... | 0·08′ | 16·69′ | 19·11′ | |
| | Chandpur ... | 6th „ „ | 11-30 „ ... | 10·08′ | 1·61′ | 11 69′ | ... | 0 08′ | 12·44′ | 12·11′ | |
| | Fenchuganj ... | 6th „ „ | 7 „ ... | 30 10′ | 1 509′ | 31·609′ | ... | 0·20′ | 27·309 | 30·609′ | |
| Dhaleswari ... | Sabhar ... | 6th „ „ | 7 A.M. ... | 24·80′ | – 8·62′ | 16·18′ | 0 20′ | ... | 17·48′ | 16·38′ | |
| Bhagirathi ... | Swarupganj ... | 6th „ „ | 6 „ ... | 5·30′ | 1 509′ | 6·809′ | ... | 0 30 | 16 629′ | 6 969′ | |
| Damodar ... | Edilpur ... | 6th „ „ | 6 „ ... | 9 17′ | 92 58′ | 101·75′ | 1 58′ | ... | 99·58′ | 95·16′ | |
| Lakhya ... | Narayanganj | 6th „ „ | 8 „ ... | 20·08′ | – 5·59′ | 14 49′ | 0·04′ | ... | 14 95′ | 15·78′ | |
| Madaripur Bil Route | Takerhat ... | 6th „ „ | 6 „ ... | 89·70′ | – 0 599 | 89 101′ | 0 10′ | ... | 9·851′ | 9·351′ | |

**Statement showing the daily gauge readings of certain rivers at the stations named below for the week ending Thursday, the 12th July 1923.**

| Name of river and place where readings are taken | | Date. | Hour | Reading on gauge | Value of zero referred to P. W. D datum. | Height above P. W. D datum | Compared with previous day's height | | Height above P. W. D datum on same date in— | | Remarks. |
|---|---|---|---|---|---|---|---|---|---|---|---|
| | | | | | | | Rise. | Fall. | 1922 | 1921 | |
| Ganges ... | Monghyr ... | 7th July 1923 | 6 A.M. ... | 110 50′ | 0 00′ | 110 50′ | 0 50′ | ... | 114 50 | 112 70′ | |
| | Rajmahal ... | 7th „ „ | 6 „ ... | ... | 56 319′ | .. | ... | ... | 74 219′ | 73 719′ | |
| | Goalundo ... | 7th „ „ | 8 hours ... | 21 50′ | 4 896′ | 26 396′ | 0 20′ | ... | 25 896′ | 27·796′ | |
| Brahmaputra ... | Gauhati ... | 7th „ „ | 8 A.M. ... | 22 30′ | 135·18′ | 157 48′ | 0 20′ | ... | 161 78′ | 162 48′ | |
| | Serajganj ... | 7th „ „ | 12 hours ... | 36 80′ | 1 509′ | 38 309′ | 0·25′ | ... | 40 609′ | 41·809′ | |
| | Dibrugarh ... | 7th „ „ | 9 A M ... | 18·70′ | 314 18′ | 332 88′ | ... | 1 20′ | 335 18′ | 332·78′ | |
| Meghna ... | Bhairab Bazar | 7th „ „ | 6 hours ... | 17·25′ | 1 61′ | 18 86′ | ... | 0·08′ | 16·86′ | 19 19′ | |
| | Chandpur ... | 7th „ „ | 12-30 „ .. | 10·33′ | 1 61 | 11 94′ | 0 25′ | ... | 12 44 | 12 61′ | |
| | Fenchuganj ... | 7th „ „ | 7 „ ... | 30 00 | 1 509′ | 31 509′ | ... | 0 10 | 27 309′ | 30 609′ | |
| Dhaleswari ... | Sabhar ... | 7th „ „ | 7 A.M. ... | 25 00 | – 8 62 | 16 38′ | 0 20′ | ... | 17 78 | 16 68′ | |
| Bhagirathi .. | Swarupganj .. | 7th „ „ | 6 „ ... | 5·64′ | 1 509′ | 7·149′ | 0 34′ | ... | 16 299′ | 6 889′ | |
| Damodar ... | Edilpur ... | 7th „ „ | 6 „ .. | 11 08′ | 92 58′ | 103 66′ | 1 92′ | ... | 103 16 | 95 16′ | |
| Lakhya ... | Naravanganj | 7th „ „ | 8 „ ... | 20 10 | – 5 59′ | 14 51′ | 0 02′ | ... | 15 49′ | 15 89′ | |
| Madaripur Bil Route | Takerhat ... | 7th „ „ | 6 „ ... | 89 90′ | – 0 599′ | 89·301′ | 0·20′ | ... | 10 001′ | 9 601′ | |

**Statement showing the daily gauge readings of certain rivers at the stations named below for the week ending Thursday, the 12th July 1923.**

| Name of river and place where readings are taken | | Date | Hour | Reading on gauge | Value of zero referred to P W D datum | Height above P W D datum. | Compared with previous day's height: Rise | Compared with previous day's height: Fall | Height above P W D datum on same date in— 1922 | Height above P W D datum on same date in— 1921. | Remarks. |
|---|---|---|---|---|---|---|---|---|---|---|---|
| Ganges ... | Monghyr ... | 8th July 1923 | 6 A.M. ... | 110·80′ | 0·00′ | 111 80′ | 0 30′ | ... | 116 00′ | 112·10′ | |
| | Rajmahal ... | 8th „ „ ... | 6 „ ... | ... | 56 319′ | ... | ... | ... | 75 019′ | 73 519 | |
| | Goalundo ... | 8th „ „ ... | 8 hours ... | ... | 4 896′ | ... | ... | ... | 26 296′ | 25·996′ | |
| Brahmaputra ... | Gauhati ... | 8th „ „ ... | 8 A M. ... | 22·40′ | 135 18′ | 157 58′ | 0 10′ | ... | 161 28′ | 162 28′ | |
| | Serajganj ... | 8th „ „ ... | 12 hours ... | 36 90′ | 1 509′ | 38 409′ | 0 10′ | ... | 40 609′ | 42 109′ | |
| | Dibrugarh ... | 8th „ „ ... | 9 A.M. ... | 19·50′ | 314 18′ | 333·68′ | 0·80′ | ... | 333 98′ | 333·48′ | |
| Meghna ... | Bhairab Bazar | 8th „ „ ... | 6 hours ... | 17 17′ | 1 61′ | 18 78′ | ... | 0 08′ | 17·19′ | 19·28′ | |
| | Chandpur ... | 8th „ „ ... | 14 „ ... | 10 50′ | 1 61′ | 12 11′ | 0·17′ | ... | 12·94′ | 12 86′ | |
| | Fenchuganj ... | 8th „ „ ... | 7 „ ... | 29 80′ | 1 509 | 31·309′ | ... | 0 20′ | 27 309′ | 30·609′ | |
| Dhaleswari ... | Sabhar ... | 8th „ „ ... | 7 A M. ... | 25 40′ | –8 62′ | 16 78′ | 0·40′ | ... | 17·98′ | 17·08′ | |
| Bhagirathi ... | Swarupganj ... | 8th „ „ ... | 6 „ ... | 8·20′ | 1 509′ | 9·709′ | 2·56′ | ... | 16 589′ | 7 389′ | |
| Damodar ... | Edilpur ... | 8th „ „ ... | 6 „ ... | 9 08′ | 92·58′ | 101 66′ | ... | 2·00′ | 102 00′ | 95·08′ | |
| Lakhya ... | Narayanganj | 8th „ „ ... | 8 „ ... | 20·04′ | –5·59′ | 14 45′ | 0·06′ | ... | 15·78′ | 15·97′ | |
| Madaripur Bil Route | Takerhat ... | 8th „ „ ... | 6 „ ... | 89·95′ | –0 599′ | 89·351′ | 0·05′ | ... | 10·201′ | 9 801′ | |

**Statement showing the daily gauge readings of certain rivers at the stations named below for the week ending Thursday, the 12th July 1923.**

| Name of river and place where readings are taken | Date | Hour | Reading on gauge | Value of zero referred to P W D datum | Height above P W D datum | Compared with previous day's height: Rise. | Compared with previous day's height: Fall. | Height above P W D datum on same date in— 1922 | Height above P W D datum on same date in— 1921 | Remarks. |
|---|---|---|---|---|---|---|---|---|---|---|
| Ganges ... Monghyr ... | 9th July 1923 | 6 A M ... | 111 30′ | 0 00′ | 111 30′ | 0 50′ | .. | 116 50′ | 111·40′ | |
| Ganges ... Rajmahal ... | 9th „ „ ... | 6 „ ... | .. | 56 319′ | ... | ... | ... | 75 319′ | 73·069′ | |
| Ganges ... Goalundo ... | 9th „ „ ... | 8 hours ... | ... | 4·896′ | ... | ... | ... | 26·396′ | 26·096′ | |
| Brahmaputra ... Gauhati ... | 9th „ „ ... | 8 A.M ... | 22 60′ | 135·18′ | 157·78 | 0 20′ | ... | 160·98′ | 162 08 | |
| Brahmaputra ... Serajganj ... | 9th „ „ ... | 12 hours ... | 36 95′ | 1·509′ | 38 459′ | 0 05 | ... | 40 609′ | 42·409′ | |
| Brahmaputra ... Dibrugarh ... | 9th „ „ ... | 9 A.M. ... | 19 50′ | 314 18′ | 333 68′ | Steady | | 333 48′ | 334·48′ | |
| Meghna ... Bhairab Bazar | 9th „ „ ... | 6 hours ... | 17 17′ | 1 61 | 18·78 | Steady | | 17 28′ | 19·36′ | |
| Meghna ... Chandpur ... | 9th „ „ ... | 14-30 „ ... | 10 67′ | 1 61′ | 12 28′ | 0 17′ | ... | 12 94′ | 13 11′ | |
| Meghna ... Fenchuganj ... | 9th „ „ ... | 7 „ ... | 29 55′ | 1 509′ | 31·059 | ... | 0 25′ | 27 309 | 30 559′ | |
| Dhaleswari ... Sabhar ... | 9th „ „ ... | 7 A M ... | 25 60′ | −8 62′ | 16 98 | 0 20 | ... | 18·28′ | 17 38′ | |
| Bhagirathi ... Swarupganj ... | 9th „ „ ... | 6 „ ... | 8 52 | 1 509′ | 10 029′ | 0 32′ | ... | 16 949′ | 8 139′ | |
| Damodar ... Edilpur ... | 9th „ „ ... | 6 „ .. | 8 50′ | 92 58′ | 101 08′ | ... | 0 58 | 101 08 | 95 66′ | |
| Lakhya ... Narayanganj | 9th „ „ ... | 8 „ ... | 20 14′ | −5 59′ | 14 55′ | 0·10′ | ... | 15 91′ | 15 99′ | |
| Madaripur Bil Route Takerhat ... | 9th „ „ ... | 6 „ ... | 89 95′ | −0 599 | 89 351′ | Steady | | 10 401′ | 10 001′ | |

**Statement showing the daily gauge readings of certain rivers at the stations named below for the week ending Thursday, the 12th July 1923.**

| Name of river and place where readings are taken | | Date. | Hour | Reading on gauge | Value of zero referred to P W D datum. | Height above P W D datum | Compared with previous day's height | | Height above P. W. D. datum on same date in— | | Remarks. |
|---|---|---|---|---|---|---|---|---|---|---|---|
| | | | | | | | Rise | Fall. | 1922 | 1921 | |
| Ganges ... | Monghyr ... | 10th July 1923 | 6 A.M. ... | 111 80′ | 0 00′ | 111 80 | 0·50′ | ... | 116·10′ | 111 10′ | |
| | Rajmahal ... | 10th „ „ ... | 6 „ .. | ... | 56 319′ | ... | ... | ... | 76 819′ | 72 5[illegible] | |
| | Goalundo ... | 10th „ „ ... | 8 hours ... | ... | 4 896 | ... | ... | ... | 26·496′ | 26·296′ | |
| Brahmaputra ... | Gauhati ... | 10th „ „ ... | 8 A.M. ... | 22 50 | 135·18′ | 157 68′ | ... | 0 10 | 160 58′ | 162·28′ | |
| | Serajganj ... | 10th „ „ ... | 12 hours ... | 37·10′ | 1·509′ | 38 609′ | 0 15′ | ... | 40 509′ | 42·809′ | |
| | Dibrugarh ... | 10th „ „ ... | 9 A.M. .. | 20 30′ | 314 18′ | 334 48 | 0 80′ | ... | 333 38′ | 336 98′ | |
| Meghna ... | Bhairab Bazar | 10th „ „ ... | 6 hours | 17 08′ | 1 61 | 18 69′ | ... | 0 08′ | 17 53′ | 19 44′ | |
| | Chandpur ... | 10th „ „ ... | 15 „ | 10 58′ | 1 61′ | 12 19′ | ... | 0 08′ | 12 36′ | 13 36′ | |
| | Fenchuganj ... | 10th „ „ ... | 7 „ | 29·35′ | 1 509 | 30 859 | ... | 0 20′ | 27 359′ | 30 609′ | |
| Dhaleswari ... | Sabhar ... | 10th „ „ ... | 7 A M | 25·70′ | – 8·62′ | 17·08′ | 0 10′ | ... | 18·48′ | 17 68′ | |
| Bhagirathi ... | Swarupganj ... | 10th „ „ ... | 6 „ ... | 8 06′ | 1 509′ | 9·569′ | ... | 0 46′ | 17 299′ | 8 679′ | |
| Damodar ... | Edilpur ... | 10th „ „ ... | 6 „ ... | 6 75′ | 92 58′ | 99 33′ | ... | 1·75′ | 104 33′ | 95 41′ | |
| Lakhya ... | Narayanganj | 10th „ „ ... | 8 „ .. | 20 21′ | – 5 59′ | 14 62′ | 0 06′ | ... | 15 97′ | 16 03′ | |
| Madaripur Bil Route | Takerhat ... | 10th „ „ ... | 6 „ ... | 90 00′ | – 0 599′ | 89 401′ | 0 05′ | ... | 10 601′ | 10·301′ | |

**Statement showing the daily gauge readings of certain rivers at the stations named below for the week ending Thursday, the 12th July 1923.**

| Name of river and place where readings are taken. | | Date | Hour | Reading on gauge | Value of zero referred to P W D datum | Height above P W D datum | Compared with previous day's height. Rise | Compared with previous day's height. Fall. | Height above P. W D. datum on same date in— 1922 | Height above P. W D. datum on same date in— 1921 | Remarks. |
|---|---|---|---|---|---|---|---|---|---|---|---|
| Ganges ... | Monghyr ... | 11th July 1923. . | 6 A M ... | 112 00′ | 0 00′ | 112 00′ | 0 20 | . . | 116 10′ | 111·10′ | |
| | Rajmahal ... | 11th , „ ... | 6 „ ... | ... | 56 319′ | ... | ... | ... | 76 869′ | 72 519′ | |
| | Goalundo ... | 11th „ „ ... | 8 hours ... | .. | 4 896′ | ... | ... | ... | 26 596′ | 26 696′ | |
| Brahmaputra ... | Gauhati ... | 11th „ „ ... | 8 A M. ... | 22 30 | 135 18′ | 157 48′ | ... | 0 20 | 159 88′ | 162 48′ | |
| | Serajganj ... | 11th „ „ ... | 12 hours ... | 37 20′ | 1 509 | 38 709 | 0 10′ | ... | 50 . 09′ | 43 309′ | |
| | Dibrugarh ... | 11th „ „ ... | 9 A M ... | 21 90 | 314 18 | 336 08′ | 1 60′ | ... | 333 38′ | 340 38′ | |
| Meghna ... | Bhairab Bazar | 11th „ „ ... | 6 hours... | 17 08 | 1 61 | 18 69 | Steady | | 17 69′ | 19 61′ | |
| | Chandpur ... | 11th „ „ ... | 16 „ ... | 10 75 | 1 61′ | 12 36′ | 0 17′ | ... | 12 36 | 13 11′ | |
| | Fenchuganj ... | 11th , „ ... | 7 „ ... | 29 20′ | 1 509 | 30 709′ | .. | 0·15′ | 27 509 | 30 609′ | |
| Dhaleswari ... | Sabhar ... | 11th „ „ ... | 7 A M ... | 25 80 | – 8 62 | 17 18 | 0 10 | ... | 18 58′ | 18 18 | |
| Bhagirathi ... | Swarupganj ... | 11th „ „ ... | 6 „ ... | 7 45′ | 1 509′ | 8 959 | ... | 0 61′ | 17 769′ | 9 089 | |
| Damodar ... | Edilpur ... | 11th „ „ ... | 6 „ ... | 5 33′ | 92 58 | 97 91′ | ... | 1 42′ | 105 08 | 96 08′ | |
| Lakhya ... | Narayanganj | 11th „ „ ... | 8 „ ... | 20 37′ | – 5 59 | 14 78′ | 0 17′ | ... | 16 12 | 16 20′ | |
| Madaripur Bil Route | Takerhat ... | 11th „ „ ... | 6 „ .. | 90 10′ | – 0 599′ | 89 501′ | 0 10′ | ... | 10 701′ | 10 401′ | |

**Statement showing the daily gauge readings of certain rivers at the stations named below for the week ending Thursday, the 12th July 1923.**

| Name of river and place where readings are taken. | | Date | Hour | Reading on gauge | Value of zero referred to P W D. datum | Height above P W D datum | Compared with previous day's height | | Height above P W D datum on same date in— | | Remarks. |
|---|---|---|---|---|---|---|---|---|---|---|---|
| | | | | | | | Rise | Fall | 1922 | 1921 | |
| Ganges ... | Monghyr ... | 12th July 1923 | 6 A M. ... | 112·10′ | 0 00′ | 112 10′ | 0 10′ | ... | 117 70′ | 111 50′ | |
| | Rajmahal ... | 12th „ „ ... | 6 „ ... | ... | 56·319′ | ... | ... | ... | 77 019′ | 72 369′ | |
| | Goalundo ... | 12th „ „ ... | 8 hours ... | ... | 4 896′ | ... | ... | ... | 26 696′ | 26 996′ | |
| Brahmaputra ... | Gauhati ... | 12th „ „ ... | 8 A.M. ... | 22·20′ | 135 18′ | 157 38′ | ... | 0·10′ | 159·18′ | 162 78′ | |
| | Serajganj ... | 12th „ „ ... | 12 hours ... | ... | 1 509 | ... | ... | ... | 40 209′ | 43·809′ | |
| | Dibrugarh ... | 12th „ „ ... | 9 A.M. ... | 22 60′ | 314 18′ | 336 78′ | 0 70′ | ... | 333 28′ | 339 88′ | |
| Meghna ... | Bhairab Bazar | 12th „ „ ... | 6 hours ... | 17 08′ | 1 61′ | 18 69′ | Steady | | 17 78′ | 19 94′ | |
| | Chandpur ... | 12th „ „ ... | 17 „ ... | 10 92′ | 1 61′ | 12·53′ | 0 17′ | ... | 12 61′ | 12 86′ | |
| | Fenchuganj ... | 12th „ „ ... | 7 „ ... | 29 00′ | 1·509′ | 30 509′ | ... | 0 20′ | 27 609′ | 30 809′ | |
| Dhaleswari ... | Sabhar ... | 12th „ „ ... | 7 A.M ... | 25 90′ | – 8 62′ | 17·28′ | 0 10′ | ... | 18 68′ | 18 58′ | |
| Bhagirathi ... | Swarupganj ... | 12th „ „ ... | 6 „ ... | 7 18 | 1 509′ | 8 689′ | ... | 0·27′ | 18 059′ | 9·019′ | |
| Damodar ... | Edilpur ... | 12th „ „ ... | 6 „ ... | 4·75 | 92·58 | 97·33′ | ... | 0·58′ | 103 08′ | 95 50′ | |
| Lakhya ... | Narayanganj... | 12th „ „ ... | 8 „ ... | 20 52′ | – 5 59′ | 14 93′ | 0 14′ | ... | 16 16′ | 16 24′ | |
| Madaripur Bil Route | Takerhat ... | 12th „ „ ... | 6 „ ... | 90 05′ | – 0·599′ | 89 451′ | ... | 0·05′ | 10 801′ | 10·601′ | |

THE following list of Government Promissory Notes in the custody of the Controller of the Currency on the 31st December 1922, deposited under articles 80 (*a*) and 84 (*a*) of the Government Securities Manual, is published for the information of officers concerned, so that any omission or error in the list may be brought to notice promptly —

The following is the form in which the investments are held —

| | | | | Rs. |
|---|---|---|---|---|
| 3½ per cent | Pro Notes | of 1842-43 | ... . | 2,15,800 |
| 3½ | „ | „ of 1854-55 | . | 1,53,700 |
| 3½ | „ | „ of 1865 | ... ... | 1,06,54,000 |
| 3½ | „ | „ of 1879 | .. | 1,000 |
| 3½ | „ | „ of 1900-01 | . . | 2,31,500 |
| 3 | „ | „ of 1896-97 | .. ... | 2,27,600 |
| 4 | „ | „ of 1915-16 | . . | 33,800 |
| 4 | „ | „ of 1916-17 | ... ... | 61,600 |
| 5 | „ | „ of 1929-47 | . | 3,68,625 |
| 5 | „ | „ of 1945-55 | . | 6,77,200 |
| 5½ | „ | „ of 1922 | | 7,800 |
| 5½ | „ | „ of 1923 | . | 16,100 |
| 5½ | „ | „ of 1925 | .. | 5,600 |
| 5½ | „ | „ of 1928 | . ... | 9,19,550 |
| 6 | „ | „ of 1926 | .. | 5,09,700 |
| 6 | „ | „ of 1927 | ... ... | 55,900 |
| 6 | „ | „ of 1930 | .. ... | 21,70,700 |
| 6 | „ | „ of 1931 | . . | 10,15,400 |
| 6 | „ | „ of 1932 | ... ... | 3,85,000 |
| Municipal and Port Trust Debentures, etc | | | ... ... | 2,67,800 |
| | | | Total ... | 1,79,78,375 |

Besides the above the following Government Promissory Notes were received but not converted into Book Debt Certificate during the year ending 31st December 1922 :—

| Case No | From whom received | Amount. |
|---|---|---|
| | | Rs. |
| 975, 977—985, 1036, 1053, 1063, 1066, 1067, 1109, 1131, 1157, 1175, 1176, 1178—1182. | President, Calcutta Improvement Tribunal ... | 1,57,400 |
| 1086, 1124, 1136 & 1138. | Collector, 24-Parganas ... ... ... | 12,100 |
| 1032, 1069 & 1110 | Special Land Acquisition Judge, 24-Parganas ... | 6,400 |
| 1121 & 1122 | Chairman, Burdwan Municipality ... ... | 900 |
| 1123 | Head-master, Baraset H. E. School ... . | 300 |
| 1132 | Director of Public Instruction, Bengal .. | 7,200 |
| 1134 | Principal, Medical College, Calcutta ... .. | 1,700 |
| 1021 | Executive Engineer, Canals Division, Calcutta . | 500 |
| 962 & 987 | Inspector-General of Prisons, Bengal.. . | 300 |
| 990 & 1135 | Collector, Hooghly ... .. . | 21,000 |
| 1139 & 1143 | Collector, Midnapore ... ... ... | 5,800 |
| 1008 | Subdivisional Officer, Contai, Midnapore ... | 1,000 |
| 1057 | Magistrate, Midnapore ... .. .. | 500 |
| 1156 | Collector, Bankura ... . ... | 500 |
| 1169 & 1170 | Magistrate, Jessore ... ... ... | 1,800 |
| 1020 | District Judge Murshidabad .. . | 1,000 |
| 961 | Magistrate, Murshidabad ... ... ... | 25,800 |
| 1202 | Collector, Murshidabad ... ... ... | 200 |
| 1186 | Manager, Kasimbazar Wards, Estate ... ... | 1,00,000 |
| 1206 & 1207 | Collector, Mymensingh ... ... ... | 1,050 |
| 1203 | Principal, Sanskrit College, Calcutta ... | 1,600 |
| 1022 | Collector of Customs, Calcutta ... ... | 5,000 |
| 1025 | Chairman, Port Commissioners, Chittagong ... | 300 |
| 1078 | Collector, Burdwan ... ... ... | 76,500 |
| 1106 | Chairman, Baranagore Municipality .. ... | 200 |
| 1103 | District Judge, Faridpur ... ... | 700 |
| 1091 | Additional District Judge, Hooghly ... ... | 600 |
| 1074 | Protector of Emigrants, Calcutta ... ... | 1,000 |

**Government Promissory Notes held on account of civil officers in direct account under article 84 (a) of the Government Securities Manual, by the Controller of the Currency, on the 31st December 1922.**

| Names of persons or funds on whose behalf held | 3 per cent loans | 3½ per cent loans | 4 per cent loans Railway shares and Debentures | Treasury bills and Post Office Cash Certificates | [illegible] per cent loans | 5½ per cent loans | 6 per cent loans | Total |
|---|---|---|---|---|---|---|---|---|
| *Agent for Government Consignments* | Rs | Rs | Rs | Rs | Rs | Rs | Rs | Rs |
| Hari Charan Mukherji | | 10,000 | | | | | | 10,000 |
| Joy Krishna Pal | 5,000 | | | | | 12,000 | | 17,000 |
| *Chief Presidency Magistrate* | | | | | | | | |
| Mahabir Prosad Poddar under the Press Act | | | | | | | 1,000 | 1,000 |
| *Collector of Calcutta* | | | | | | | | |
| Narendra Nath Sen, Stamp Vendor, S C Court, Calcutta | | | | 40 | | | | 40 |
| *Superintendent, General Hospital, Calcutta* | | | | | | | | |
| Osman Gunny, Diet Contractor | 500 | 100 | | | | | | 600 |
| *Commissioner of Excise and Salt, Bengal* | | | | | | | | |
| Carew & Co | | 1,000 | | | | | | 1,000 |
| *Executive Engineer, Canals Division* | | | | | | | | |
| Bhola Nath De, Kutnavis | 100 | | | | | | | 100 |
| *Chief Engineer, Public Health, Bengal* | | | | | | | | |
| Chatterji, Das & Co, Contractors | | 300 | | | | | | 300 |
| *Secretary Government of Bengal, Commerce Department* | | | | | | | | |
| Begg Dunlop & Co ... | | | | 30,000 | | | | 30,000 |
| J C Banerjee, Contractor | | | 3,000 | | | | | 3,000 |
| *Port Officer, Calcutta* | | | | | | | | |
| S C Mukherji & Co, Contractors | | 1,000 | | | | | | 1,000 |
| *Executive Engineer, 1st Calcutta Division* | | | | | | | | |
| J C Banerjee, Contractor | | 2,000 | | | 3,000 | | | 5,000 |
| *Collector, Mymensingh* | | | | | | | | |
| Santosh six annas Wards Estates | | | 50,000 | | | | | 50,000 |
| *Collector, Nadia* | | | | | | | | |
| Particulars not known .. | | 2,000 | | | | | .. | 2,000 |
| *Collector, Midnapore* | | | | | | | | |
| On account of lands taken up for a canal | | 2,000 | | | | | | 2,000 |
| Bhajahari Jana | ... | 100 | | | | | | 100 |
| *Collector of Customs, Calcutta* | | | | | | | | |
| Unclaimed deposits in Calcutta Customs | | | 500 | | | .. | | 500 |
| Total ... | 5,600 | 18,500 | 3,500 | 80,040 | 3,000 | 12,000 | 1,000 | 1,23,640 |

| Ledger Folio No. | Name of person or Fund on whose behalf held | 3½ PER CENT | | | | 3 per cent of 1896 97 | 4 PER CENT. | | 5 PER CENT | |
|---|---|---|---|---|---|---|---|---|---|---|
| | | 1842-43 | 1851 55 | 1865 | 1900-01 | | 1915 16. | 1916-17 | 1929-47 | 1945-55 |
| | | Rs | Rs | Rs | Rs | Rs | Rs | Rs | Rs | Rs |
| 2501 | *Mohsin Fund Fixed Endowment* | | | 10,57,000 | | | | ... | | |
| 2502 | *Mohsin Fund Variable Endowment* . | | | 90,400 | | | | | | . |
| 2503 | *Presidency College Graduate Scholarship* .. | | | 1,36,100 | | | . | | | |
| 2504 | *Durga Charan Laha's Trust* | | | 50,800 | | | | | . | |
| 2505 | Chuni Lal Seal's Dispensary | | | 50,000 | . | | . | | | .. |
| 2506 | *Bengal Famine Orphan Fund* | | | 35,000 | | | | | | . |
| 2507 | Sasti Das Mookerjee, Cashier, Office of the Accountant-General, Bengal | | | 1,500 | | 500 | | | | |
| 2508 | Taracknath Prosad Dhar, Assistant Cashier . | | | 200 | | | | | . | |
| 2509 | Guru Charan Bhattacharji, Assistant Cashier | | | 200 | | | | . | | |
| 2510 | B C Nath, Clock winder | 100 | | | | | | | | |
| 2512 | Gopal Lal Tagore Endowment | | | 14,000 | | | | | | |
| 2513 | Hodgson Endowment . | | | 1,700 | | | | . | | |
| 2514 | Owen, John Elias, Legacy | | | 12,600 | | 500 | | | | |
| 2515 | Medical College Hospital | | | 12,300 | | | | | | |
| 2516 | Ezra Hospital | | | 23,000 | | | | | | |
| 2517 | C S Fagan Endowment | | | 1,100 | | | | | | |
| 2518 | Sailor's Endowment | | | 2,000 | | | | • | | |
| 2519 | J B Roberts' Endowment | | | 1,000 | | | | | | |
| 2520 | Maharaja Ulwar Endowment | | . | 1,000 | | | | | | |
| 2521 | Maharaja Burdwan Endowment | | | 500 | | | | | | |
| 2522 | Medical College Samaritan Fund . | | | 5,000 | 1,000 | | | | | |
| 2523 | Khetra Moni Dutt Fund | | | 7,000 | . | | | | | |
| 2524 | Moir Memorial Fund | | | 8,800 | | | • | | | |
| 2525 | Abdul Gani Scholarship | | | 7,500 | | | | | | |
| 2526 | Goodeve Scholarship | | | 4,000 | | | | | | |
| 2527 | F C Chatterji Scholarship | | | 5,000 | | | | | | |
| 2528 | Maharaja Gwalior Prize | | | 300 | . | | | | | |
| 2529 | Goodeve Prize | | | 700 | | | | | | . |
| 2530 | Edinburgh Prize | | .. | 800 | | | | | | . |
| 2531 | Dr Bholanath Bose Prize . | | | 1,000 | . | | | | | |
| 2532 | Dr O C Raye Testimonial Prize | | | 1,600 | | | | . | • | .. |
| 2533 | Dr Macnamara Silver Medal in Chemistry . .. | | | 600 | . | . | | | | .. |
| 2534 | Sir Pardey Lukis Memorial Scholarship Fund . | | | 1,000 | | | | | | |
| 2535 | Banku Behary Gupta, Studentship | | | . | | | | | | 3,600 |
| 2536 | Calvert Medal | | ... | 400 | | | . | .. | | . |
| 2537 | Orfila Medal | | | 400 | | | | . | • | |
| 2538 | Sutherland Silver Medal ... | | | .. | | | | | ... | .. |
| 2539 | Deare Memorial Fund . .. | .. | . | | | | . | . | .. | |
| 2540 | Dr A Mitra Research Scholarship Endowment .. .. | | .. | | | | | | | |
| | Carried over ... | 100 | ... | 15,57,000 | 1,000 | 1,000 | ... | ... | ... | 3,600 |

| 5½ PER CENT. | | | | 6 PER CENT | | | | | Debentures and Railway shares | Total | Name of officer to whom interest is sent |
|---|---|---|---|---|---|---|---|---|---|---|---|
| 1922 | 1923 | 1925 | 1926 | 1926 | 1927 | 1930 | 1931 | 1932 | | | |
| Rs | Rs | Rs | Rs | Rs | Rs | Rs | Rs | Rs | Rs | Rs | |
| | . | | | | | ... | | . | | 16[illegible] | Accountant-General, Bengal |
| ... | | | . | . | | | | | | 90,400 | Ditto |
| | | | | | | | 3,600 | . | | 1,69,700 | Ditto |
| | | | | | | | | | | 50,800 | Ditto |
| | . | | | | | | . | | | 50,000 | Ditto |
| . | | | | . | | | | .. | | 35,000 | Ditto |
| | | | | | | | | | | 2,000 | Ditto |
| | | | | | | | | | | 200 | Ditto |
| | . | | | | | . | | | | 200 | Ditto |
| | | | | | | | | | | 100 | Ditto |
| | | | .. | | | | | | | 14,000 | Principal, Medical College |
| | | | | | | | | | | 4,700 | Ditto |
| | | | | | | | | | | 13,100 | Ditto |
| | | | | | | | . | | | 12,300 | Ditto |
| | | | | | | . | | | | 23,000 | Ditto |
| | | | | | | . | . | | | 1,100 | Ditto |
| | | . | | | | | . | | | 2,000 | Ditto |
| | | | | | | | | | | 1,000 | Ditto |
| | | | | | | | | | .. | 1,000 | Ditto |
| | | | | | | | | | | 500 | Ditto |
| | | | | | | | | | | 6,000 | Ditto |
| | | | | | | | — | .. | | 7,000 | Ditto |
| | . | | | | | | | | | 8,300 | Ditto |
| | | | | | | | | | | 7,500 | Ditto |
| | | | | | | | | | | 4,000 | Ditto |
| | . | | | | | | | | | 5,000 | Ditto |
| | | | | | | | | | | 300 | Ditto |
| | | . | .. | | | | | | | 700 | Ditto |
| | | | | | | . | | | | 800 | Ditto |
| | | . | | | | | . | | | 1,000 | Ditto |
| | . | | | | | | | . | | 1,500 | Ditto |
| | | | | | | | | . | | 600 | Ditto |
| | | | 4,600 | | | 300 | | . | | 4,900 | Ditto |
| | | .. | | | | | . | | | 3,600 | Ditto |
| . | . | | . | | | ... | . | | | 400 | Ditto |
| . . | . | | | | | | | | | 400 | Ditto |
| | | | | | | 200 | | | | 200 | Ditto |
| | .. | | | | | .. | 1,100 | | | 1,100 | Ditto |
| . | ... | | . | . | | . | . | 17,000 | . | 17,000 | Secretary, Calcutta School of Tropical Medicines and Hygiene Endowment Fund |
| . | ... | ... | 3,600 | . | .. | 500 | 4,700 | 17,000 | .. | 15,68,500 | |

| Ledger folio No | Name of Person or Fund on whose behalf held | 3½ PER CENT | | | | 3 per cent of 1896-97 | 4 PER CENT | | 5 PER CENT | |
|---|---|---|---|---|---|---|---|---|---|---|
| | | 1842-43 | 1854-55 | 1865 | 1900-01. | | 1915 16 | 1916-17 | 1929-47 | 1945-55 |
| | | Rs | Rs | Rs | Rs | Rs | Rs | Rs | Rs | Rs |
| | Brought forward | 100 | | 15,37,000 | 1,000 | 1,000 | | . | . | 3,600 |
| 2548 | Prince Ghulam Muhammad's Charity ... . | | .. | 76,800 | ... | | | . | .. | ... |
| 2550 | The Planters' Jubilee Endowment .. . | | | 4,000 | | | | | | ... |
| 2636 | Fuller Memorial Scholarship | . | | 9,500 | | | | . | 2,100 | . |
| 2637 | Chuni Lal Mitter, Cashier, Presidency College ... | | | | | 1,000 | | .. | .. | ... |
| 2639 | Ram Gopal Sen Endowment .. | . | | . | | | . | . | | |
| 2649 | Gajendra Nath Mukherji, Store-keeper . | . | .. | 500 | | . | . | | | . |
| 2651 | Jagamohan Mukerji and Parbati Debi Prize Fund | . | | 2,000 | . | | | | . | ... |
| 2652 | Kali Krishna Paramanik Endowment .. | | 1,000 | | | | | | | . |
| 2653 | Bruce Legacy | . | ... | 10,46,200 | | . | | | | |
| 2655 | Bethune Prize . | ... | | 1,900 | | | | | | .. |
| 2656 | Vidyasagar Scholarship | | | 1,500 | | . | | | | |
| 2657 | Maharani Sakhya Raja Saheba of Gwalior Prize Fund | | | 400 | | | | | . | |
| 2658 | Mohit Bala Prize Fund .. | | ... | 500 | | | . | — | .. | |
| 2661 | Doveton College Fund | | . | 1,97,200 | . | .. | | | | . |
| 2663 | Arun Chandra Chakravarti Prize . . | | . | | | | | | | . |
| 2665 | Boni Madhab Ghose's Scholarship . | | .. | 600 | | | | | | |
| 2666 | Kalipada Roy Free Studentship | | | 800 | . | . | | . | | |
| 2667 | Sastivar Raichoudhuri's Endowment for Taki Girls' School | | | 3,000 | | | | | | |
| 2668 | Sriram Bhattacharji's Prize for Ariadaha School | | | 400 | | | . | | .. | . |
| 2669 | Jagabundhu Scholarship .. | | | .. | | . | | | | ... |
| 2671 | Scindia and Rao Krishna Rao's Fund ... . | | | 600 | | | . | . | . | |
| 2672 | Khetra Moni Dutt Fund ... | .. | .. | 4,000 | . | | . | | . | |
| 2673 | Maharaja Scindia Bahadur of Gwalior Prize ... | .. | ... | | | 200 | .. | .. | ... | ... |
| 2674 | N C Chatterjee's Fund | | . | 1,000 | . | | . | .. | | .. |
| 2675 | Nagendra Nandini Memorial Fund ... ... . | | | .. | | | . | | . | 1,000 |
| 2676 | Basanta Bhose's Fund | | . | | ... | .. | | ... | . | .. |
| 2677 | Gopal Lal Tagore Fund ... | . | . | 4,800 | | | | . | | |
| 2678 | Nutbehary Chatterji, Collecting Sircar ... ... .. | 1,000 | | | . | | | . | . | . |
| 2679 | Messrs Ghosh & Co, Diet Contractors ... ... | .. | | . | | 1,000 | | | | ... |
| 2680 | Lady Ronaldshay Fund ... | ... | | .. | .. | | .. | . | 500 | ... |
| 2681 | Hari Charan Chaudhuri, Milk Contractor ... ... | ... | ... | .. | | 1,000 | ... | .. | ... | ... |
| | Carried over ... | 1,100 | 1,000 | 28,92,600 | 1,000 | 4,200 | ... | ... | 2,600 | 4,600 |

| 5½ PER CENT | | | | 6 PER CENT | | | | | Debentures and Railway shares | Total | Name of officer to whom interest is sent |
|---|---|---|---|---|---|---|---|---|---|---|---|
| 1922 | 1923 | 1925 | 1928 | 1926 | 1927 | 1930 | 1931 | 1932 | | | |
| Rs | Rs | Rs | Rs | Rs | Rs | Rs | Rs | Rs | Rs | Rs | |
| | ... | . | 3,600 | .. | | 500 | 4,700 | 17,000 | | 15,68,500 | |
| | | | | | | | | | | 16,100 | Principal, Medical College, and Superintendent, General Hospital |
| | | | | | | | | | | 4,900 | Superintendent, General Hospital |
| | | | | | | | 2,700 | | | 11,400 | Director of Public Instruction, Bengal |
| | | | | | | | | | | 1,000 | Ditto |
| | | | | | | | 1,500 | | | 1,500 | Ditto |
| | | | | | | | | | | 500 | Director of Surveys Bengal |
| | | | | | | | | | | 2,000 | Secretary, Board of Sanskrit Examinations, Calcutta |
| | | | | | | | | | | 1,000 | Secretary, Calcutta Sanskrit Association |
| | | | | | | | | | | 10,16,200 | Honorary Secretary, Bruce Institution |
| | | | | | | | | | | 1,900 | Lady Principal, Bethune College |
| | | | | | | | | | | 1,500 | Ditto |
| | | | | | | | | | | 400 | Ditto |
| | | | | | | | | | | 500 | Ditto |
| | | | | | | | | | | 1,97,200 | Inspector of European Schools, Bengal |
| | | | 500 | | | | | | | 500 | Head Master, Hare School |
| | | | | | | | | | | 600 | Inspector of Schools, Presidency Division |
| | | | | | | | | | | 300 | Ditto |
| | | | | | | | | | | 8,000 | Ditto |
| | | | | | | | | | | 400 | Ditto |
| | | | | | | 1,000 | | | | 1,000 | Ditto |
| | | | | | | | | | | 600 | Superintendent, Campbell Medical School and Hospital |
| | | | | | | | | | | 4,000 | Ditto |
| | | | | | | | | | | 200 | Ditto |
| | | | | | | | | | | 1,000 | Ditto |
| | | | | | | | | | | 1,000 | Ditto |
| | | | | | | | | | 10,000 | 10,000 | Ditto |
| | | | | | | | | | | 4,800 | Ditto |
| | | | | | | | | | | 1,000 | Ditto |
| | | | | | | | | | | 1,000 | Ditto |
| | | | | | | | | | | 500 | Ditto |
| | | | | | | | | | | 1,000 | Ditto |
| ... | ... | .. | 4,100 | ... | . | 1,500 | 8,900 | 17,000 | 10,000 | 29,48,500 | |

| Ledger folio No | Name of Person or Fund on whose behalf held | 3½ per cent | | | | 3 per cent. of 1896-97 | 4 per cent | | 5 per cent | |
|---|---|---|---|---|---|---|---|---|---|---|
| | | 1842-43 | 1854-55 | 1865 | 1900-01 | | 1915-16 | 1916-17 | 1929-47 | 1945-55. |
| | | Rs | Rs | Rs | Rs | Rs | Rs. | Rs | Rs | Rs |
| | Brought forward | 1,100 | 1,000 | 28,92,600 | 1,000 | 4,200 | | | 2,600 | 4,000 |
| 2600 | Normal Memorial | . | | 4,000 | | | | | | |
| 2601 | Darbhanga (Madrassa) Scholarship | | | 15,500 | | . | | | . | . |
| 2602 | Sir Charles Elliot Purse Fund | . | | 200 | . | | | | | . |
| 2603 | Nawab Bahadur Abdul Latif Khan's Ripon Prize | | . | 300 | | | | | .. | . |
| 2605 | Brojendra Nath Mullick, Clerk, School of Art | | | 100 | | | | | | . |
| . | Bijoy Gopal Singh, Cashier | | . | .. | 1,000 | | | . | .. | . |
| 2607 | Prasanna Kumar Tagore Law | | | 6,800 | | | | | | . |
| 2608 | Sitala Sundari Basu Medal | . | | 800 | | | | | | |
| 2609 | Bethune School | | | 17,100 | | .. | ... | | .. | . |
| 2610 | Amir-i-kabir (Madrassa) | | | 17,600 | | | | . | | . |
| 2611 | Bhairab Chandra Medal | | | 200 | | | .. | | | |
| 2612 | Woodrow Memorial | .. | . | 500 | | | | | . | .. |
| 2613 | Hara Kumar Tagore Sanskrit Scholarship | | | 7,700 | | | | | | |
| 2614 | Maulvi Saiyad Abey Ahmud's Ripon Prize | | | 500 | | | | | | |
| 2615 | Prince Johan Kader Mirza Bahadur's Ripon Prize | .. | | 500 | | | | | . | . |
| 2616 | Saiyad Ali Khan Bahadur's Ripon Scholarship | | | 3,500 | | | | | | |
| 2617 | Muhammadan Literary Society's Ripon Prize | | | 1,100 | | | | | | |
| 2618 | Sahibzada Mahomed Nasiruddin Haidar's Ripon Prize | . | | .00 | | | | | | |
| 2619 | Nawab Zainul Abedin Khan Bahadur's Ripon Prize | | | 500 | | | | | | |
| 2620 | Nawab Ashan Ulla's Ripon Scholarship | | | 4,000 | | | | | . | |
| 2621 | The Sussex Trust | | | | | | | | | .. |
| 2622 | Sahibzada Muhammad Rahimuddin's Ripon Prize | | | 1,200 | | | | . | | |
| 2623 | Kasim Ariff's Ripon Prize | | | 600 | | | | | | |
| 2624 | Mirza Abdul Karim Shiraze's Ripon Prize | .. | | 300 | | | | | | |
| 2625 | Cox's Bazar Middle English School Medal | .. | | 300 | | . | | | | |
| 2626 | Tarini Charan Sarcar's Free Studentship | ... | .. | 1,000 | | | | . | | |
| 2627 | Abhoy Charan Das Memorial Prize | | . | 3,600 | | . | | | | |
| 2628 | Dowlat Chandra Rai Jubilee Medal | | | 2,000 | | | | | . | . |
| 2629 | Barisal Kasipur Educational Prize | | | 200 | | | . | | | . |
| 2630 | Elliot Medal Fund | | | 500 | | | | | | |
| 2631 | Umesh Chandra Pal Trust | . | | .. | | 200 | | | . | .. |
| 2632 | Sir Andrew Fraser Medal | ... | . | 1,500 | | | | . | | .. |
| 2633 | Kristo Das Kundu Medal | . | . | 500 | | | | . | .. | . |
| 2634 | Dutt's Scholarship | .. | . | 5,300 | . | | .. | . | . | .. |
| 2635 | Nistarini Dasi Fund | ... | ... | 3,600 | .. | . | .. | ... | 1,400 | .. |
| | Carried over | 1,100 | 1,000 | 29,93,900 | 2,000 | 4,400 | ... | ... | 4,000 | 4,600 |

| 5½ PER CENT | | | | 6 PER CENT. | | | | | Debentures and Railway shares | Total | Name of officer to whom interest is sent |
|---|---|---|---|---|---|---|---|---|---|---|---|
| 1922 | 1923 | 1925 | 1928 * | 1926 | 1927 | 1930 | 1931 | 1932 | | | |
| Rs | Rs. | Rs | Rs | Rs | Rs | Rs | Rs | Rs | Rs | Rs | |
| | .. | . | 4,100 | | | 1,500 | 8,900 | 17,000 | 10,000 | [illegible] | |
| | | | | | | | | | | 4,000 | Principal, Calcutta Madrassa |
| | | | | | | | | . | | 15,500 | Ditto |
| | | | | | | | | . | | 200 | Ditto |
| | | | | | | | | | | 800 | Ditto |
| | | | | | | | | | | 100 | Director of Industries, Bengal |
| | | | | | | | | | | 1,000 | Ditto |
| | | | | | | | | | | 6,800 | Director of Public Instruction, Bengal |
| | | . | | | | . | | | | 300 | Ditto |
| | | | | | | | | | | 17,100 | Ditto |
| | | | | | | | | | | 17,600 | Ditto |
| | | | | | | | | | | 200 | Ditto |
| | | | | | | | | | | 500 | Ditto |
| | | | | | | | . | | | 7,700 | Ditto |
| | | | | | | | | | | 500 | Ditto |
| | | | | | | | | | | 500 | Ditto |
| | | | | | | | . | | | 3,100 | Ditto |
| | | | | . | | | | | | 1,100 | Ditto |
| | | | | | | | | | | 300 | Ditto |
| | | | | | | | | | | 500 | Ditto |
| | | | | | | | | | | 4,000 | Ditto |
| | . | | 2,600 | | | 2,90,000 | | | | 2,92,600 | Ditto |
| | | | | | | | | | | 1,200 | Ditto |
| | | | | | | | | | | 600 | Ditto |
| | | | | | | | | | | 800 | Ditto |
| | | | | | | | | | | 800 | Ditto |
| | | | | | | | | | | 1,000 | Ditto |
| | | | | . | | | | | | 3,600 | Ditto |
| | | | | | | .. | | | | 2,000 | Ditto |
| | | | | | | . | ... | | | 200 | Ditto |
| | | | | .. | . | . | | | . | 500 | Ditto |
| . | | | | | | . | . | | | 100 | Ditto |
| .. | | | . | | | | | .. | | 1,500 | Ditto |
| ... | | | .. | . | | .. | . | .. | | 500 | Ditto |
| ... | . | | | | | . | | | | 5,800 | Ditto |
| | | | .. | . | . | . | 2,600 | | | 7,600 | Ditto |
| | | . | 6,700 | | | 2,91,500 | 11,500 | 17,000 | 10,000 | 33,47,700 | |

| Ledger Folio No | Name of Person or Fund on whose behalf held | 3½ PER CENT | | | | 3 per cent of 1896-97 | 4 PER CENT | | 5 PER CENT | |
|---|---|---|---|---|---|---|---|---|---|---|
| | | 1842-43 | 1854-55 | 1865 | 1900 01 | | 1915-16 | 1916-17 | 1929-47 | 1945-55 |
| | | Rs | Rs | Rs | Rs | Rs | Rs | Rs | Rs | Rs |
| | Brought forward | 1,100 | 1,000 | 29,93,900 | 2,000 | 4,400 | | | 4,000 | 4,600 |
| 2553 | Ambica Charan Chowdhury Endowment | | ... | 1,500 | | | | | | . |
| 2555 | Scindia's Donation to Presidency College | | | 3,500 | | | | | | |
| 2557 | Abhoy Charan Pal Memorial Prize | | | 100 | | | | | | |
| 2558 | Hira Lal Mukherji, Cashier | | | 600 | 2,000 | 1,800 | | | | |
| 2559 | Subal Krishna Das Memorial Prize . . . | | | 100 | | | | | | |
| 2560 | Jadu Lal Mullik Prize | | | 200 | | | | | | |
| 2561 | Dhirendra Nath Mitter Free Studentship | | | | | | | | | |
| 2562 | Girish Chandra Deb Prize . | | | 500 | | | | | | |
| 2563 | Prosad Chandra Chakravarty, Steward, Eden Hindu Hostel | | | | | 600 | | | . | |
| 2564 | Maharaja Gwalior Medal or Money Prize . | | | 500 | | | | | | |
| 2565 | Ram Jadu Bhattacharjee Memorial Prize .. . | | | 100 | | | | | | |
| 2566 | Harish Chandra Kaviratna Memorial Prize | | | 400 | | | | | | |
| 2575 | Cowell Scholarship . | | . | 1,500 | | | | | | |
| 2576 | Hira Lal Mukherjee's Free Studentship | | | 700 | . | | | | | |
| 2577 | Maharaja Gwalior Prize | | | 500 | | | | | | |
| 2578 | Maharaja Darbhanga Prize and Scholarship . | | | 5,400 | | | | | | |
| 2579 | Maharaja Burdwan Sanskrit Title Examination | | | 5,300 | | | | | | |
| 2580 | Madhab Chandra Giri's Vedic Professorship and Scholarship | | | 13,500 | | | | | | |
| 2581 | Sati Devi Free Studentship | | | 600 | .. | | | | | |
| 2582 | Maheswari Dasi Scholarship | | | 17,400 | | | | | | |
| 2583 | Prasanna Kumar Tagore Sanskrit Scholarship . | | | 2,800 | | . | | | | |
| 2584 | Maharani Sarnamayi Sanskrit Scholarship .. . | | | 9,200 | | . | | | .. | . |
| 2585 | Kshetra Moni Debya Prize and Stipends .. . .. | . | | 1,500 | | | . | | | |
| 2586 | Rani Madhumati Debya Scholarship . .. . | | | 9,000 | | | . | | ... | |
| 2587 | Raj Krishna Rai Stipends for Darshan and Sahitya . .. | . | | 8,000 | | | | | | |
| 2588 | Hara Kumar Tagore's Jubilee Prize .. . . | | | 2,200 | | .. | . | . | | . |
| 2589 | Hara Kumar Tagore's Tol Stipend | . | . | 1,000 | | .. | | | .. | . |
| 2590 | Abhoy Charan Mullick's Scholarship .. . . . | | | 3,300 | | | | | | . |
| 2591 | Biraj Mohini Debi Medal | | | 500 | .. | . | . | . | . | . |
| 2592 | Karali Charan Sarkar Stipend | . | .. | 5,100 | . | . | | . | | . |
| 2593 | Nimai Charan Mitra's Fund .. | | ... | 1,800 | | | | | . | ... |
| 2598 | Scindia and Bhupal Donation .. | . | . | 1,000 | .. | .. | ... | ... | . | .. |
| 2599 | Maharaja Gwalior Prize ... | . | . | 600 | ... | . | | | ... | ... |
| | Carried over . | 1,100 | 1,000 | 30,36,800 | 4,000 | 6,800 | . | | 4,000 | 4,600 |

| 5½ per cent | | | | 6 per cent | | | | | Debentures and Railway shares | Total | Name of officer to whom interest is sent |
|---|---|---|---|---|---|---|---|---|---|---|---|
| 1922 | 1923 | 1925 | 1928 | *1926 | 1927 | 1930 | 1931 | 1932 | | | |
| Rs | Rs | *Rs | Rs | Rs | Rs | Rs | Rs | Rs | Rs | Rs | |
| | | | 6,700 | | | 2,91,500 | 11,500 | 17,000 | 10,000 | 33,47,700 | |
| | | | | | | | | | | 1,500 | Registrar, Calcutta University |
| | | | | | | | | | | 3,500 | Principal, Presidency College |
| | | | | | | | | | | 100 | Ditto |
| | | | | | | 600 | | | | 5,000 | Ditto |
| | | | | | | | | | | 100 | Ditto |
| | | | | | | | | | | 200 | Ditto |
| | | | | | | | | | 3,000 | 3,000 | Ditto |
| | | | | | | | | | | 500 | Ditto |
| | | | | | | | | | | 600 | Ditto |
| | | | | | | | | | | 500 | Ditto |
| | | | | | | | | | | 100 | Ditto |
| | | | | | | | | | | 400 | Ditto |
| | | | | | | | | | | 1,000 | Principal, Sanskrit College |
| | | | | | | | | | | 700 | Ditto |
| | | | | | | | | | | 500 | Ditto |
| | | | | | | | | | | 5,400 | Ditto |
| | | | | | | | | | | 5,300 | Ditto |
| | | | | | | | | | | 13,500 | Ditto |
| | | | | | | | | | | 600 | Ditto |
| | | | | | | | | | | 17,400 | Ditto |
| | | | | | | | | | | 2,800 | Ditto |
| | | | | | | | | | | 9,200 | Ditto |
| | | | | | | | | | | 1,500 | Ditto |
| | | | | | | | | | | 9,000 | Ditto |
| | | | | | | | | | | 3,000 | Ditto |
| | | | | | | | | | | 2,200 | Ditto |
| | | | | | | | | | | 1,000 | Ditto |
| | | | | | | | | | | 3,300 | Ditto |
| | | | | | | | | | | 500 | Ditto |
| | | | | | | | | | | 5,100 | Ditto |
| | | | | | | | | | | 1,300 | Ditto |
| | | | | | | | | | | 1,000 | Principal, Calcutta Madrassa |
| | | | | | | | | | | 600 | Ditto |
| ... | ... | ... | 6,700 | ... | ... | 2,92,100 | 11,500 | 17,000 | 13,000 | 34,48,600 | |

| Ledger Folio No | Name of Person or Fund on whose behalf held | 5½ PER CENT | | | | 3 per cent of 1896 97 | 4 PER CENT | | 5 PER CENT | |
|---|---|---|---|---|---|---|---|---|---|---|
| | | 1842-43 | 1851-55 | 1865 | 1900-01 | | 1915-16 | 1916-17 | 1929-47 | 1945-55 |
| | | Rs | Rs | Rs | Rs | Rs | Rs | Rs | Rs | Rs |
| | Brought forward | 1,100 | 1,000 | 30,86,800 | 1,000 | 6,800 | | | 4,000 | 1,600 |
| 2687 | *Hospital Port Dues Fund, Calcutta* | | | | | | | | | |
| 2688 | Satyendra Nath Mitra, Treasurer, Bengal Secretariat | | | 3,000 | | | | | | |
| 2689 | Akhoy Kumar Mallick, Intendant, Presidency Opium Godown | | 6,000 | | | | | | | |
| 2690 | Calcutta Electric Supply Corporation, Ld | | | | | | | | | |
| 2691 | Narsing Sohai Madangopal, Licensee | | | 25,000 | | | | | | |
| 2693 | *Steam Boiler Inspection Fund* | | | 1,33,800 | | | | | | |
| 2697 | Sheo Bukah Bugla Veterinary Scholarship | | | 3,500 | | | | | | |
| 2698 | Ananta Nath Datta, Manager of Hostel | | | | 700 | | | | | |
| 2700 | Messrs Bird & Co, Contractors | | | | | | | 2,000 | | |
| 2701 | Messrs Mackenzie, Lyall & Co | | | 500 | | | | | | |
| 2702 | Messrs Kilburn & Co | | | 1,500 | | | | | | |
| 2703 | Bepin Behari Sen, Treasurer | | | 14,000 | | | | 9,000 | | 27,000 |
| 2705 | Atul Chandra Ghosh, Licensed Shipping Broker | | | 1,000 | | | | | | |
| 2706 | Sisir Kumar Ghosh, Broker | | | 500 | | | | | | 700 |
| 2707 | Gobin Behari Sen, Licensed Shipping Broker | | | 1,000 | | | | | | |
| 2708 | Pulin Behari Sen, Licensed Shipping Broker | | | 1,000 | | | | | | |
| 2709 | Provash Chandra Ghosh, Licensed Shipping Broker | | | 1,000 | | | | | | |
| 2710 | Surendra Nath Ghosh, Accountant | | | | | 500 | | | | |
| 2711 | Upendra Nath Sen, Broker | | | 1,000 | | | | | | |
| 2712 | Ashutosh Ghosh, Banking Clerk | | | | | 1,000 | | | | |
| 2713 | Ganesh Chandra Sen, Broker | 1,000 | | | | | | | | |
| 2717 | Behari Lal Mitra, Banking Clerk | | | 1,000 | | | | | | |
| 2718 | Purna Chandra Mitra, Bill Clerk | | | 1,000 | | | | | | |
| 2721 | Brajendra Kumar Law, Treasurer | 5,000 | 45,000 | 8,200 | 35,900 | 5,900 | | | | |
| 2722 | Narendra Nath Sen, Stamp Vendor, Calcutta Small Cause Court | | | 4,000 | | | | | | |
| 2723 | Monindra Nath Bose, Nazir | | | 800 | | | | | | |
| 2724 | Dwijendra Lal Bose, Junior Stamp Vendor, Small Cause Court, Calcutta | | | 4,000 | | | | | | |
| 2725 | Harendra Nath Chatterjee, Stamp Vendor | | 1,400 | | 600 | 1,500 | | | | |
| 2726 | Nirod Kumar Bose, Nazir | | | | 1,000 | | | | | |
| 2727 | Sarat Chandra Das, Bailiff | | | 300 | | | | | | |
| 2728 | Panna Lal Dutt, Income-tax Bailiff | | | | 500 | | | | | |
| | Carried over | 7,100 | 53,400 | 32,92,900 | 42,700 | 15,700 | | 11,000 | 4,000 | 32,800 |

| 5½ PER CENT. | | | | 6 PER CENT | | | | | Debentures and Railway shares | Total | Name of officer to whom interest is sent |
|---|---|---|---|---|---|---|---|---|---|---|---|
| 1922 | 1923 | 1925 | 1928 | 1926 | 1927 | 1930 | 1931 | 1932 | | | |
| Rs | Rs | Rs | Rs | Rs | Rs | Rs | Rs | Rs | Rs | | |
| | | | 6,700 | | | 2,92,100 | 11,500 | 17,000 | 13,000 | 34,48,600 | |
| | | | | | | | | | 50,000 | 50,000 | Secretary, Government of Bengal, Marine Department |
| | | | | | | | | | | 3,000 | Secretary, Bengal Government, Financial Department |
| | | | | | | | | | | 6,000 | Ditto |
| | | | | | | 5,000 | | | | 5,000 | Secretary, Government of Bengal, Commerce Department |
| | | | | | | 5,000 | | | | 25,000 | Ditto |
| | | | | | | | | | | 1,33,800 | President and Secretary to the Steam Boiler Commission. |
| | | | | | | | | | | 3,500 | Principal, Bengal Veterinary College |
| | | | | | | | | | | 700 | Ditto |
| | | | | | | | | | | 2,000 | Collector of Customs, Calcutta |
| | | | | | | | | | | 500 | Ditto |
| | | | | | | | | | | 1,500 | Ditto |
| | | | 33,000 | | | | | | | 83,000 | Ditto |
| | | | | | | | | | | 1,000 | Shipping Master |
| | | | | | | | | | | 1,200 | Ditto |
| | | | | | | | | | | 1,000 | Ditto |
| | | | | | | | | | | 1,000 | Ditto |
| | | | | | | | | | | 1,000 | Ditto |
| | | | | | | | | | | 500 | Ditto |
| | | | | | | | | | | 1,000 | Ditto |
| | | | | | | | | | | 1,000 | Ditto |
| | | | | | | | | | | 1,000 | Ditto |
| | | | | | | | | | | 1,000 | Port Officer, Calcutta |
| | | | | | | | | | | 1,000 | Ditto |
| | | | | | | | | | | 1,00,000 | Collector, Calcutta |
| | | | 2,000 | | | | | | | 6,000 | Ditto |
| | | | | | | | | | | 800 | Ditto |
| | | | | | | | | | | 4,000 | Collector, Income-tax Calcutta |
| | | | | | | | | | | 3,500 | Ditto |
| | | | | | | | | | | 1,000 | Ditto |
| | | | | | | | | | | 800 | Ditto |
| | | | | | | | | | | 500 | Ditto |
| | | | 41,700 | | | 2,97,100 | 11,500 | 17,000 | 63,000 | 38,89,400 | |

| Ledger folio No | Name of Person or Fund on whose behalf held | 3½ PER CENT | | | | 3 per cent of 1896-97 | 4 PER CENT | | 5 PER CENT | |
|---|---|---|---|---|---|---|---|---|---|---|
| | | 1842-43 | 1854-55 | 1865 | 1900-01 | | 1915-16 | 1916-17 | 1929-47 | 1945-55 |
| | | Rs | Rs | Rs | Rs | Rs | Rs | Rs | Rs | Rs |
| | Brought forward | 7,100 | 53,400 | 32,92,900 | 42,700 | 15,700 | | 11,000 | 4,000 | 32,300 |
| 2729 | Shiva Kedar Mukherji, Income tax Bailiff | | | 500 | | | | | | |
| 2730 | Maulvi Dewan Mahomed Zikaia, Bailiff .. | | | | 300 | | | | | |
| 2731 | Niranjan Ghosh, Nazir . | | | | | | | | | |
| 2733 | Tarapprasanna Basu, Treasurer | | | 10,000 | ... | | | | | |
| 2734 | Charity Fund | | | 10,500 | .. | | | | | |
| 2735 | E B George, Bailiff . | | . | | | | | 1,000 | | |
| 2736 | H O'Brien, ditto | | 500 | | 1,500 | | | | | |
| 2737 | R Edmond Gasper, ditto | | | | 1,000 | | | | . | |
| 2738 | Nityananda Das, ditto . | | | 500 | | | | | | |
| 2739 | Jogindra Nath Samanta, Bailiff | | | 500 | | | . | | | . |
| 2740 | Latafar Rahman, ditto | | | 300 | | | . | | | |
| 2741 | Eksiruddin Ahmed, ditto | | | 300 | | | | | . | |
| 2742 | Mahamed Salamutulla, ditto | | | 300 | | | | . | | |
| 2743 | Birendra Nath Datta, ditto | | | 300 | | | | | | |
| 2744 | Gupi Nath Pyne, ditto | | | 300 | | | | | | |
| 2745 | Shaik Azizur Rahaman, ditto | | | 300 | | | | | | |
| 2746 | Abu Abdulla, ditto | | | 300 | | . | .. | | - | |
| 2747 | Ali Hosain, Court Overseer | | | 1,000 | | | | | ... | |
| 2748 | Surendra Nath Chunder, Bailiff | | | 300 | . | | | | | |
| 2749 | Surendra Nath Sil, ditto | | . | . | 300 | | | | | |
| 2750 | Haridhan Chatterji, ditto | . | | . | 300 | | | | | |
| 2751 | Kanai Lal Biswas, ditto | | | 300 | | | | | | |
| 2752 | Syed Muhammad Ali, ditto | | | 300 | | | | | | |
| 2753 | Mahamed Nasiruddin, ditto | | | 300 | | | | | | |
| 2754 | Krishna Chandra Sriman, ditto | | | 300 | | | | | | |
| 2755 | A Mannan, Seal ditto | | | 500 | | | | | . | |
| 2756 | Surendra Nath Pyne, ditto | 200 | | 100 | | | . | | | |
| 2757 | Shaikh Sademany, ditto | 300 | | | | | | | | |
| 2758 | Abdos Sammud Mullick, ditto | | . | 300 | | | | | | |
| 2759 | Gour Chandra Pal, ditto | | | 300 | | | | - | | . |
| 2760 | Kamal Kumar Nag, ditto | | | 300 | | | | . | | |
| 2761 | Abdul Rashid, ditto | | | | 300 | | | . | | |
| 2762 | Amir Hossain, ditto | | | | 300 | | | | | |
| 2763 | Safdar Rahman Khan, ditto | | | | 300 | | | | | |
| 2764 | Asrafali, Court Inspector | | 1,000 | .. | 700 | | | | | |
| 2772 | R Medlycott, Registrar . | | . | 500 | | | | | . | |
| 2893 | Tarak Chandra Dutt, Registrar | | . | . | | | | | | . |
| 2773 | Surendra Nath Bhattacharji, Cashier ... ... . | | | | | 300 | | . | | .. |
| 2773 | Akshoy Kumar Guha, Cashier | 500 | | | | | . | | .. | |
| 2775 | Charu Chandra Banerji, Accountant, Indian Munitions Board .. . .. | 500 | .. | . | | . | . | ... | .. | . |
| | Carried over ... | 8,400 | 54,900 | 33,21,600 | 47,700 | 16,000 | .. | 12,000 | 4,000 | 32,300 |

| 5½ PER CENT | | | | 6 PER CENT | | | | | Debentures and Railway shares | Total | Name of officer to whom interest is sent |
|---|---|---|---|---|---|---|---|---|---|---|---|
| 1922 | 1923 | 1925. | 1928. | 1926 | 1927 | 1930 | 1931 | 1932 | | | |
| Rs | Rs | Rs | Rs | Rs | Rs | Rs | Rs | Rs | Rs | | |
| | | | 41,700 | | | 2,97,100 | 11,500 | 17,000 | 63,000 | 38,89,400 | |
| | | | | | | | | | | 500 | Collector, Income tax, Calcutta |
| | | | | | | | | | | 300 | Ditto |
| | | | | 1,000 | | | | | | 1,000 | Ditto |
| | | | | | | | | | | 10,000 | Judges, Court of Small Causes, Calcutta |
| | | | | | | | | | | 10,600 | Ditto |
| | | | | | | | | | | 1,000 | Ditto |
| | | | | | | | | | | 2 000 | Ditto |
| | | | | | | | | | | 1,000 | Ditto |
| | | | | | | | | | | 500 | Ditto |
| | | | | | | | | | | 500 | Ditto |
| | | | | | | | | | | 300 | Ditto |
| | | | | | | | | | | 300 | Ditto |
| | | | | | | | | | | 300 | Ditto |
| | | | | | | | | | | 300 | Ditto |
| | | | | | | | | | | 300 | Ditto |
| | | | | | | | | | | 300 | Ditto |
| | | | | | | | | | | 300 | Ditto |
| | | | | | | | | | | 1,000 | Ditto |
| | | | | | | | | | | 300 | Ditto |
| | | | | | | | | | | 300 | Ditto |
| | | | | | | | | | | 300 | Ditto |
| | | | | | | | | | | 300 | Ditto |
| | | | | | | | | | | 300 | Ditto |
| | | | | | | | | | | 300 | Ditto |
| | | | | | | | | | | 300 | Ditto |
| | | | | | | | | | | 500 | Ditto |
| | | | | | | | | | | 300 | Ditto |
| | | | | | | | | | | 300 | Ditto |
| | | | | | | | | | | 300 | Ditto |
| | | | | | | | | | | 300 | Ditto |
| | | | | | | | | | | 300 | Ditto |
| | | | | | | | | | | 300 | Ditto |
| | | | | | | | | | | 300 | Ditto |
| | | | | | | | | | | 1,700 | Ditto |
| | | | | | | | | | | 500 | Inspector-General of Police, Bengal |
| | | | | 500 | | | | | | 500 | Ditto |
| | | | | | | | | | | 300 | Ditto |
| | | | | | | | | | | 500 | Ditto |
| | | | | | | | | | | 500 | Deputy Inspector-General of Police, Bengal |
| | | | 41,700 | 1,500 | | 2,97,100 | 11,500 | 17,000 | 63,000 | 39,28,900 | |

| Ledger Folio No | Name of Person or Fund on whose behalf held | 3½ PER CENT | | | | 3 per cent of 1896 97 | 4 PER CENT | | 5 PER CENT | |
|---|---|---|---|---|---|---|---|---|---|---|
| | | 1842-43 | 1854-55 | 1865 | 1900 01 | | 1915-16 | 1916 17 | 1929-47 | 1945-55 |
| | | Rs | Rs | Rs | Rs | Rs | Rs | Rs | Rs. | Rs. |
| | Brought forward | 8,600 | 54,900 | 33,21,600 | 47,700 | 16,000 | | 12,000 | 4,000 | 32,300 |
| 2777 | Dwarka Nath Saha, Cashier, Public Vehicle Department | | | | | | | | | |
| 2778 | Foundling Asylum | | | 60,800 | | | | | | 26,900 |
| 2779 | Fire Brigade Fund | | | | | | | | | 31,500 |
| 2780 | Sibdas Banerji, Clerk, Claude Martin Fund .. | | | 200 | | | | . | | |
| 2781 | Amrita Lal Dutta, Cashier | | | 7,000 | | | | | | . |
| 2781 | Satrughna Lahiri, Cashier | | | | | | | | | |
| 2782 | Malina Kanta Mazumdar, Cashier, Public Vehicle Department . . | | | 1,500 | | | | . | . | |
| 2783 | Albert Victor Leper Asylum | | | 2,000 | | | | | | |
| 2786 | Nabin Chandra Das & Co, Contractors | | | | 1,000 | | | | . | |
| 2787 | Jogendranath Guha, clerk | | | | | | | | | |
| 2788 | Babu Lal | | | 100 | | | | | | |
| 2789 | European Lunatic Asylum | | | 5,300 | | | | | | |
| 3701 | C I T case No 4 of 1913 | | | 4,400 | | | | | | |
| 3702 | C I T case No 5 of 1913 | | | 2,100 | | | | | | |
| 3703 | C I T case No 6 of 1913 | | | 40,500 | | | | | | |
| 3704 | C I T case No 1 of 1914 | | | 3,000 | | | | | | .. |
| 3705 | C I T case No 2 of 1914 | | | 2,400 | | | | | | . |
| 3706 | C I T case No 8 of 1914 | | | 16,000 | . | | | | | |
| 3707 | C I T case No 9 of 1914 | | | 10,300 | | | | | | |
| 3708 | C I T case No 14 of 1914 | | | 500 | | | | | | |
| 3709 | C I T case No 17 of 1914 | | | 5,300 | | | | | | |
| 3710 | C I T case No 51 of 1914 | | | 18,400 | | | | | | |
| 3711 | C I T case No. 57 of 1914 | | | 2,300 | | | | | .. | |
| 3712 | C I T case No 57A of 1914 | | | 2,300 | | . | .. | | | |
| 3713 | C I T case No 63 of 1914 | | | 600 | | | | | . | .. |
| 3714 | C I T case No 64 of 1914 | | | 3,100 | | | | | .. | . |
| 3715 | C I T case No 71 of 1914 | | | 3,300 | | | | | . . | ... |
| 3716 | C I T case No 77 of 1914 | . | | 7,400 | | | | | | |
| 3718 | C I T case No 101 of 1914 | | | 5,700 | | | | | . | .. |
| 3719 | C I T case No 102 of 1914 | | | 15,100 | | | . | | | |
| 3720 | C I T case No 104 of 1914 | | | 800 | | | | | .. | |
| 3721 | C I T case No 108 of 1914 | . | | 56,700 | | | | | | |
| 3723 | C I T case No 111 of 1914 | | . | 1,400 | | | | ... | | |
| 3724 | C I T case No 116 of 1914 | | | 11,900 | .. | | | | | . |
| 3725 | C I T case No. 3 of 1915 | | . | 3,600 | | | | | | . |
| 3727 | C I T case No. 8A of 1915 . | | . | 100 | | .. | | | . | ... |
| 3728 | C I T case No. 19 of 1915 . | | | 32,700 | | | . | . | ... | .. |
| 3730 | C I T case No 26 of 1915 . | ... | .. | 4,400 | | . | | . | | |
| 3731 | C I T case No 28 of 1915 .. | .. | .. | 100 | | . | | | . | ... |
| 3732 | C I T case No 60 of 1915 ... | . | . . | 4,000 | | ... | . | . | . | .. |
| | Carried over . | 8,600 | 54,900 | 36,56,900 | 48,700 | 16,000 | .. | 12,000 | 4,000 | 90,700 |

| 5½ PER CENT | | | | 6 PER CENT | | | | | Debentures and Railway shares | Total | Name of officer to whom interest is sent |
|---|---|---|---|---|---|---|---|---|---|---|---|
| 1922 | 1923 | 1925 | 1928. | 1926 | 1927 | 1930 | 1931 | 1932 | | | |
| Rs | Rs | Rs | Rs | Rs | Rs | Rs | Rs | Rs | Rs | Rs | |
| .. | ... | .. | 41,700 | 1,500 | . | 2,97,100 | 11,500 | 17,000 | 63,000 | 39,28,9[illegible] | |
| . | | ... | 1,000 | | . | | | . | .. | 1,000 | Commissioner of Police, Calcutta |
| ... | | . | . | .. | . | .. | . | . | . | 87,700 | Ditto |
| . | ... | . | | | | | . | | | 31,500 | Ditto |
| . | | | ... | | | | | | | 200 | Ditto |
| | | . | | | | | .. | | . | 7,000 | Ditto |
| .. | . | . | | . | | . | . | | | 1,000 | Ditto |
| | .. | | | | | | | | | 1,500 | Ditto |
| | . | | . | .. | | | | | | 2,000 | Ditto and President, Albert Victor Leper Asylum |
| | | | | | | . | | | | 1,000 | Police Surgeon, Calcutta |
| . | | | | | | 500 | | | | 500 | Superintendent, Lunatic Asylums at Presidency |
| . | . | | | | | | | | | 100 | Ditto |
| | | . | | . | | | | | | 3,300 | Ditto |
| . | . | . | . | | | | | | | 4,400 | President, Calcutta Improvement Tribunal |
| . | . | | | | | | | | | 2,100 | Ditto |
| .. | . | | . | | | | | | | 40,500 | Ditto |
| | .. | | | | | . | | | | 3,000 | Ditto |
| | | . | | | | | . | | | 2,400 | Ditto |
| | | ... | | | | | | | | 16,000 | Ditto |
| ... | . | .. | | ... | | | | . | | 10,300 | Ditto |
| ... | | | .. | | | | | | | 500 | Ditto |
| ... | .. | | | | | | | | . | 5,500 | Ditto |
| ... | . | | | | | | | . | | 18,400 | Ditto |
| ... | | | | | | | | | | 2,300 | Ditto |
| | | | | | | | | | | 2,300 | Ditto |
| . | .. | ... | . | | | . | | ... | | 600 | Ditto |
| | ... | . | | | | | . | | | 3,100 | Ditto |
| . | .. | .. | | | . | . | | | | 3,300 | Ditto |
| . | . | . | . | . | | . | | | | 7,400 | Ditto |
| .. | | | . | | | | | | | 5,700 | Ditto |
| . | | | . | | | | | | | 1[illegible],100 | Ditto |
| ... | . | ... | .. | | | . | | | | 800 | Ditto |
| . | | .. | . | | | . | | | | 56,700 | Ditto |
| ... | . | .. | | .. | | .. | | | . | 1,400 | Ditto |
| ... | .. | ... | . | . | . | . | .. | | | 11,900 | Ditto |
| ... | ... | ... | . | | ... | .. | . | | .. | 3,600 | Ditto |
| ... | ... | .. | . | | ... | . | . | . | | 100 | Ditto |
| ... | .. | ... | ... | .. | .. | .. | | .. | . | 32,700 | Ditto |
| .. | .. | ... | ... | ... | .. | | . | | | 4,400 | Ditto. |
| ... | ... | ... | ... | ... | .. | ... | ... | . | | 100 | Ditto |
| ... | ... | ... | ... | ... | .. | ... | . | .. | .. | 4,100 | Ditto |
| ... | ... | . | 42,700 | 1,500 | ... | 2,97,600 | 11,500 | 17,000 | 63,000 | 43,26,100 | |

| Ledger Folio No. | Name of Person or Fund on whose behalf held | 3½ PER CENT | | | | 3 per cent of 1896-97 | 4 PER CENT | | 5 PER CENT | |
|---|---|---|---|---|---|---|---|---|---|---|
| | | 1842-43 | 1854-55 | 1865 | 1900-03 | | 1915-16 | 1916-17 | 1929-47. | 1915-55 |
| | | Rs | Rs | Rs | Rs | Rs | Rs | Rs. | Rs | Rs |
| | Brought forward | 8,600 | 54,900 | 36,56,900 | 48,700 | 16,000 | .. | 12,000 | 4,000 | 90,700 |
| 3733 | C I T case No 67 of 1915 | | | . | .. | | | .. | | .. |
| 3734 | C I T case No 84 of 1915 | . | | 2,200 | | | .. | . | | |
| 3735 | C I T case No 105 of 1915 | | | .. | | 100 | . | . | | |
| 3737 | C I T case No 114 of 1915 | . | | 6,800 | . | . | | | | |
| 3738 | C I T case No 115 of 1915 | | .. | 4,300 | | | | | . | . |
| 3739 | C I T case No 123 of 1915 | | | 1,000 | | | | . | | .. |
| 3740 | C I T case No 132 of 1915 | | | 4,600 | | | | . | | |
| 3741 | C I T case No 133 of 1915 | | | 1,500 | | | . | | | . |
| 3742 | C I T case No 148 of 1915 | | | 24,600 | | | | ... | | |
| 3743 | C I T case No 150 of 1915 | | | 18,800 | | | | | . | . |
| 3744 | C I T case No 159 of 1915 | | | 200 | | . | | | | |
| 3745 | C I T case No 2 of 1916 | | | 1,400 | | | | | .. | . |
| 3746 | C I T case No 8 of 1916 | | | 1,100 | . | 100 | | | | |
| 3748 | C I T case No 15 of 1916 | | | 600 | | | | | | |
| 3749 | C I T case No 16 of 1916 | | | 300 | | | | | | |
| 3750 | C I T case No 17 of 1916 | | | 1,900 | . | | | | | |
| 3751 | C I T case No 24 of 1916 | | | 1,600 | | | | | | |
| 3753 | C I T case No 46 of 1916 | | | 300 | | | | | | |
| 3754 | C I T case No 51 of 1916 | . | | 48,600 | | | | | | |
| 3755 | C I T case No 56 of 1916 | | | 2,100 | | | | | | |
| 3756 | C I T case No 69 of 1916 | | | 16,700 | | . | | | | |
| 3760 | C I T case No 114 of 1916 | | | 1,400 | | | | . | .. | . |
| 3761 | C I T case No 13 of 1916 | . | | 12,700 | | | | | | . |
| 3762 | C I T case No 147 of 1916 | ... | . | 47,500 | | | | | | |
| 3763 | C I T case No 148 of 1916 | | | 2,500 | | | | . | . | .. |
| 3765 | C I T case No 165 of 1916 | | | 4,900 | . | | .. | | . | . |
| 3766 | C I T case No 169 of 1916 | | | 5,000 | . | | . | . | .. | . |
| 3767 | C I T case No 172 of 1916 | | | 700 | | | | | | |
| 3768 | C I T case No 186 of 1916 | | | 100 | | | | | .. | .. |
| 3769 | C I T case No 210 of 1916 | | | 4,100 | | | .. | .. | . | . |
| 3770 | C I T case No 215 of 1916 | | | 1,800 | | | .. | | .. | . |
| 3771 | C I T case No 219 of 1916 | | | 1,600 | | ... | ... | ... | .. | |
| 3772 | C I T case No 233 of 1916 | | | 7,400 | | | | . | . | . |
| 3775 | C I T case No 257 of 1916 | | | 15,100 | | | .. | . | . | |
| 3776 | C I T case No 259 of 1916 | | | | .. | | . | . | 13,600 | |
| 3777 | C I T case No 263 of 1916 | | . | 2,900 | | | | | | . |
| 3778 | C I T case No 264 of 1916 | | . | 1,100 | | . | | .. | . | .. |
| 3781 | C I T case No 274 of 1916 | | | 5,300 | | | | . | | . |
| 3782 | C I T case No 280 of 1916 | | ... | 20,800 | . | | | . | . | ... |
| 3783 | C I T case No 281 of 1916 | | . | 500 | .. | | . | | .. | |
| 3784 | C I T case No 282 of 1916 .. | . | | 3,300 | . | .. | | ... | .. | ... |
| 3785 | C I T case No 285 of 1916 . | .. | | 400 | .. | | ... | .. | ... | ... |
| | Carried over .. | 8,600 | 54,900 | 39,28,500 | 48,700 | 16,200 | ... | 12,000 | 17,600 | 90,700 |

| 5½ per cent | | | | 6 per cent. | | | | | Debentures and Railway shares | Total | Name of officer to whom interest is sent |
|---|---|---|---|---|---|---|---|---|---|---|---|
| 1922 | 1923 | 1925 | 1928 | 1926 | 1927 | 1930 | 1931 | 1932 | | | |
| Rs | Rs | Rs | Rs | Rs | Rs | Rs | Rs | Rs | Rs | Rs | |
| ... | | . | 42,700 | 2,500 | | 2,97,400 | 11,500 | 17,000 | 63,000 | 43,26,100 | |
| | . | | ... | . | .. | .. | . | 5,300 | | 5,300 | President, Calcutta Improvement Tribunal |
| .. | | | .. | .. | | . | | | | 2,200 | Ditto |
| . | | | | . | | | | | | 100 | Ditto |
| . | .. | | | . | | . | | | | 6,800 | Ditto |
| . | . | . | | | | | | | . | 4,300 | Ditto |
| . | .. | | . | | | .. | | . | . | 1,000 | Ditto |
| .. | .. | | | | . | | | | | 4,600 | Ditto |
| | .. | .. | | | | . . | | | | 1,500 | Ditto |
| ... | | | | | | . | | | | 24,600 | Ditto |
| | .. | . | .. | | | | . | | | 18,300 | Ditto |
| | | | | . | | | | | | 200 | Ditto |
| | | | | | | | | | | 1,400 | Ditto |
| | | | | | | | | | | 1,200 | Ditto |
| | | | | | | | | | | 600 | Ditto |
| | | | | | | | | | | 300 | Ditto |
| | | | | | | | | | | 1,900 | Ditto |
| | | | | | | . | | | | 1,600 | Ditto |
| | | | | | | | | | | 300 | Ditto |
| | | | | | | | | | | 18,600 | Ditto |
| | | | | | | | | | | 2,100 | Ditto |
| | | | | | | | | | | 16,700 | Ditto |
| . | | | | | | | | | | 1,400 | Ditto |
| . | | | | | | | | | | 12,700 | Ditto |
| | | | | | | | | | | 47,500 | Ditto |
| | | | | | | | | | | 2,500 | Ditto |
| | | | | | | | | | | 4,900 | Ditto |
| | | | | | | | | | | 5,000 | Ditto |
| | | | | | | | | | | 700 | Ditto |
| | | | | | | | | | | 100 | Ditto |
| . | | | | | | | | | . | 4,100 | Ditto |
| | | | | | | | | | | 1,300 | Ditto |
| | | | | | | | | | | 1,600 | Ditto |
| | | . | | | | | | | | 7,300 | Ditto |
| | | | | .. | | | | .. | .. | 10,100 | Ditto |
| . | | | | | | | | | | 13,600 | Ditto |
| | | | . | | | | | | | 2,900 | Ditto |
| | . | | | | | | | | | 1,100 | Ditto |
| .. | .. | . | | | . | . | | | . | 5,300 | Ditto |
| . | | | . | | | | | | | 20,800 | Ditto |
| | .. | .. | | | . | | . | | | 500 | Ditto |
| .. | . | ... | .. | . | . | . | | . | | 3,300 | Ditto |
| ... | . | ... | ... | | . | ... | ... | .. | ... | 400 | Ditto |
| ... | ... | .. | 42,700 | 2,500 | .. | 2,97,400 | 11,500 | 22,300 | 63,000 | 46,16,800 | |

| Ledger Folio No | Name of Person or Fund on whose behalf held | 3½ PER CENT | | | | 3 per cent of 1896-97 | 4 PER CENT. | | 5 PER CENT | |
|---|---|---|---|---|---|---|---|---|---|---|
| | | 1842 43 | 1854-55 | 1865 | 1900-01 | | 1915-16 | 1916-17 | 1929-47 | 1945 55 |
| | | Rs | Rs | Rs | Rs | Rs | Rs | Rs. | Rs | Rs. |
| | Brought forward | 8,600 | 54,900 | 39,28,500 | 48,700 | 16,200 | | 12,000 | 17,600 | 90,700 |
| 3786 | C I T case No 287 of 1916 | | | 1,900 | | . | | | . | . |
| 3787 | C I T case No 293 of 1916 | . | | 8,300 | | | | ... | .. | ... |
| 3788 | C I T case No 299 of 1916 | | | 1,800 | | | | | ... | . |
| 3791 | C I T case No 1 of 1917 | | | | .. | | | | . | |
| 3792 | C I T case No 47 of 1917 | | | 900 | | | | . | | |
| 3793 | C I T case No 60 of 1917 | | | 2,500 | | | | | .. | 100 |
| 3794 | C I T case No 73 of 1917 | | | 4,500 | | | | | | . |
| 3795 | C I T case No 125 of 1917 | . | | | | | . | | | 1,300 |
| 3796 | C I T case No 131 of 1917 | | | 700 | . | | | . | | . |
| 3798 | C I T case No 146 of 1917 | | | | | | | | | 6,300 |
| 3799 | C I T case No 156 of 1917 | | | 1,400 | | | | | | |
| 3800 | C I T case No 162 of 1917 | | | 3,100 | | . | | | | .. |
| 3801 | C I T case No 176 of 1917 | | | 8,800 | | | | . | | |
| 3803 | C I T case No 183 of 1917 | | | 400 | | | | | .. | |
| 3804 | C I T case No 185 of 1917 | | | | | 100 | | | . | |
| 3804 | C I T case No 189 of 1917 | | | | | | | | . | |
| 3807 | C I T case No 200 of 1917 | | | | | | | | | . |
| 3808 | C I T case No 202 of 1917 | | | . | | | . | | . | |
| 3810 | C I T case No 213 of 1917 | | .. | 500 | | | | | | |
| 3811 | C I T case No 223 of 1917 | | | 100 | | | . | | | |
| 3812 | C I T case No 239 of 1917 | | | 5,700 | | | | | | . |
| 3814 | C I T case No 246 of 1917 | | | | | | | | | ... |
| 3815 | C I T case No 247 of 1917 | | | 9,500 | | | | | | |
| 3816 | C I T case No 253 of 1917 | | | 7,500 | | | | | | |
| 3817 | C I T case No 254 of 1917 | | | . | . | | ... | | | .. |
| 3819 | C I T case No 1 of 1918 | | | 400 | | . | . | | . | ... |
| 3820 | C I T case No 4 of 1918 | | . | 700 | | | | | | ... |
| 3821 | C I T case No 5 of 1918 | | | | | | .. | . | ... | ... |
| 3822 | C I T case No 6 of 1918 | .. | | 1,800 | . | | . | ... | . | ... |
| 3823 | C I T case No 7 of 1918 | | | 8,900 | | | .. | . | | ... |
| 3824 | C I T case No 9 of 1918 | | .. | 400 | ... | | . | . | . | .. |
| 3825 | C I T case No 10 of 1918 | . | | 1,300 | | | . | | .. | .. |
| 3827 | C I T case No 36 of 1918 | | | | | | ... | ... | ... | |
| 3828 | C I T case No 37 of 1918 | | | 700 | .. | | | .. | .. | ... |
| 3831 | C I T case No 61 of 1918 | | . | 8,400 | . | | . | . | .. | ... |
| 3833 | C I T case No 76 of 1918 | | . | | | | . | .. | . | ... |
| 3834 | C I T case No 77 of 1918 | . | | | | . | . | . | ... | ... |
| 3835 | C I T case No 87 of 1918 | | | 700 | .. | ... | . | ... | ... | ... |
| 3836 | C I T case No 104 of 1918 .. | . | | 2,[illegible] | ... | | ... | . | | . |
| 3837 | C I T case No 115 of 1918 | . | ... | 6,300 | .. | | ... | .. | ... | .. |
| 3838 | C I T case No 120 of 1918 ... | | | 11,300 | . | | . | . | ... | ... |
| | Carried over .. | 8,600 | 54,900 | 40,27,200 | 58,700 | 16,300 | ... | 12,000 | 17,600 | 98,400 |

| 5½ PER CENT | | | | 6 PER CENT | | | | | Debentures and Railway shares | Total | Name of officer to whom interest is sent |
|---|---|---|---|---|---|---|---|---|---|---|---|
| 1922 | 1923. | 1925 | 1928 | 1926 | 1927 | 1930 | 1931 | 1932 | | | |
| Rs | Rs | Rs | Rs | Rs | Rs | Rs | Rs | Rs | Rs | Rs | |
| .. | .. | | 42,700 | 2,500 | | 2,97,600 | 11,500 | 22,600 | 63,000 | 46,16,800 | |
| . | | | | | . | | . | | | 1,900 | President, Calcutta Improvement Tribunal |
| | .. | | | | | | | .. | | 8,800 | Ditto |
| | . | | | | | | | | | 1,800 | Ditto |
| | . | | | | | | | 34,900 | | 34,900 | Ditto |
| | .. | | | | | | | | | 900 | Ditto |
| | | | | | | 700 | | | | 8,900 | Ditto |
| | | | | | | . | | | | 4,500 | Ditto |
| | | | | | | | | | | 1,600 | Ditto |
| | . | | | | | | | | | 700 | Ditto |
| | | | | | | | | | | 6,300 | Ditto |
| | | | | | | | | | | 1,100 | Ditto |
| | | | | | | | . | | | 3,100 | Ditto |
| | | | | | | | | | | 8,800 | Ditto |
| | | | | | | | | | | 100 | Ditto |
| | | | | | | | | | | 100 | Ditto |
| | | . | | | | | 700 | | | 700 | Ditto |
| | | 300 | | | | | | | | 300 | Ditto |
| | | 400 | | | | | | | | 400 | Ditto |
| | | | . | | | | | | | 560 | Ditto |
| | | | | | | | | | | 100 | Ditto |
| | | | | | | | | | | 5,700 | Ditto |
| | | | 5,400 | | | | | | | 5,400 | Ditto |
| | | | | | | | | | | 9,500 | Ditto |
| | | . | | | | | | | | 7,500 | Ditto |
| . | | 1,100 | | | | | | | | 1,100 | Ditto |
| | | | | | | | | | | 400 | Ditto |
| | | | | | | | | | | 700 | Ditto |
| | | | | | | 80,000 | | | | 80,000 | Ditto |
| | . | | | | | | . | | | 1,800 | Ditto |
| .. | | . | | | . | | | | | 8,900 | Ditto |
| .. | | . | | | | | | | | 400 | Ditto |
| | . | | | | | | | | | 1,300 | Ditto |
| . | .. | | | | | 8,800 | | | | 8,800 | Ditto |
| | | . | . | | . | | | . | | 700 | Ditto |
| . | | .. | | | | | | . | | 2,400 | Ditto |
| | | | 3,900 | | | | .. | | | 3,900 | Ditto |
| .. | . | | 32,000 | | . | . | | ... | | 32,000 | Ditto |
| ... | . | | | | | | | . | | 700 | Ditto |
| . | .. | | . | | .. | . | .. | | | 200 | Ditto |
| .. | . | .. | | | . | | | | | 6,300 | Ditto |
| .. | . | .. | | . | . | | | | | 11,800 | Ditto |
| ... | ... | 1,800 | 84,000 | 2,500 | .. | 3,87,100 | 12,200 | 57,200 | 63,000 | 48,91,500 | |

| Ledger Folio No | Name of Person or Fund on whose behalf held | 3½ PER CENT | | | | 3 per cent of 1896-97 | 4 PER CENT | | 5 PER CENT | |
|---|---|---|---|---|---|---|---|---|---|---|
| | | 1842-43 | 1854-55 | 1865 | 1900-01 | | 1915-16 | 1916-17 | 1929-47 | 1945-55 |
| | | Rs | Rs | Rs | Rs | Rs | Rs | Rs | Rs | Rs |
| | Brought forward | 8,600 | 54,900 | 40,27,200 | 48,700 | 16,300 | . | 12,000 | 17,600 | 98,400 |
| 3839 | C I T case No 142 of 1918 . | | | | | | | | . | |
| 3840 | C I T case No 151 of 1918 | | ... | 4,700 | . | | | . | . | |
| 3842 | C I T case No 155A of 1918 | | | | .. | . | .. | .. | | |
| 3844 | C I T case No 158 of 1918 | | | 3,200 | ... | .. | . | .. | ... | . |
| 3845 | C I T case No 160 of 1918 | | | 22,600 | . | | | | . | .. |
| 3845 | C I T case No 164 of 1918 | | | | | . | | | .. | ... |
| 3846 | C I T case No 165 of 1918 | | | | | | | | | .. |
| 3848 | C I T case No 172 of 1918 | | | | | | | . | .. | |
| 3849 | C I T case No 173 of 1918 | | | 3,800 | . | 100 | | | | .. |
| 3850 | C I T case No 174 of 1918 | | | 1,800 | | | . | . | ... | .. |
| 3851 | C I T case No 176 of 1918 | . | | | .. | | | . | | |
| 3852 | C I T case No 178 of 1918 | . | | 29,100 | | | | . | | . |
| 3853 | C I T case No 180 of 1918 | | | . | | | | | .. | 1,300 |
| 3854 | C I T case No 189 of 1918 | . | | . | | | | | | .. |
| 3857 | C I T case No 213 of 1918 | | | | | | | | | 51,400 |
| 3858 | C I T case No 23 of 1919 | | | | | | . | | . | |
| 3859 | C I T case No 31 of 1919 | | | | . | | | | | |
| 3860 | C I T case No 32 of 1919 | | .. | 51,500 | | | | | | .. |
| 3861 | C I T case No 38 of 1919 | | | 4,000 | | | | .. | | 10,300 |
| 3863 | C I T case No 41 of 1919 | | | 2,600 | | . | | . | | .. |
| 3864 | C I T case No 46 of 1919 | | | | | . | | | ... | |
| 3865 | C I T case No 48 of 1919 | | .. | | . | | . | ... | ... | |
| 3867 | C I T case No 52 of 1919 | | | 26,200 | .. | | | | ... | |
| 3868 | C I T case No 84 of 1919 | | | 11,900 | | | .. | .. | . | .. |
| 3869 | C I T case No 85 of 1919 | | | 18,000 | | .. | .. | .. | ... | . |
| 3870 | C I T case No 86 of 1919 | | . | 7,400 | . | . | ... | ... | . | .. |
| 3871 | C I T case No 89 of 1919 | | | 48,300 | | | .. | . | ... | ... |
| 3872 | C I T case No 90 of 1919 | . | | 600 | ... | . | ... | . | ... | .. |
| 3873 | C I T case No 93 of 1919 | | | 4,500 | | | ... | . | .. | ... |
| 3874 | C I T case No 95 of 1919 | | | 100 | . | ... | . | .. | ... | ... |
| 3875 | C I T case No 102 of 1919 | | | . | . | ... | . | . | . | |
| 3876 | C I T case No 103 of 1919 | | . | | . | .. | ... | ... | ... | ... |
| 3877 | C I T case No 104 of 1919 | | | . | ... | ... | ... | .. | ... | .. |
| 3878 | C I T case No 105 of 1919 .. | . | .. | | .. | .. | .. | ... | ... | ... |
| 3879 | C I T case No 106 of 1919 | . | | 12 200 | .. | .. | . | .. | ... | ... |
| 3880 | C I T case No 107 of 1919 | .. | . | 3,500 | . | ... | .. | ... | ... | ... |
| 3881 | C I T case No. 117 of 1919 | . | .. | . | ... | ... | ... | ... | ... | 100 |
| 3882 | C I T case No 122 of 1919 . | | | 4,700 | . | . | .. | .. | . | ... |
| 3883 | C. I T case No 123 of 1919 | . | ... | .. | | ... | .. | ... | . | ... |
| 3884 | C I T case No 124 of 1919 . | .. | | .. | ... | . | ... | ... | ... | ... |
| 3885 | C I T case No 131 of 1919 .. | .. | .. | .. | ... | .. | ... | ... | ... | ... |
| | Carried over ... | 8,600 | 54,900 | 42,38,800 | 48,700 | 16,400 | .. | 12,000 | 17,600 | 1,61,500 |

| 5½ PER CENT | | | | 6 PER CENT | | | | | Debentures and Railway shares | Total | Name of officer to whom interest is sent |
|---|---|---|---|---|---|---|---|---|---|---|---|
| 1922 | 1923 | 1924 | 1925 | 1926 | 1927 | 1930 | 1931 | 1932 | | | |
| Rs. | Rs | Rs | Rs | Rs | Rs | Rs | Rs | Rs | Rs | Rs | |
| . | . | 1,800 | 84,000 | 2,500 | | 3,87,100 | 12,200 | 57,200 | 63,000 | 18,91,500 | |
| .. | . | | 100 | | | 7,000 | | | | 7,100 | President, Calcutta Improvement Tribunal |
| .. | | | | | | | | | | 4,700 | Ditto |
| . | | | 3,400 | | | | | | | 3,400 | Ditto |
| .. | . | . | | | | | | | | 3,200 | Ditto |
| | | ... | | | | | | | | 22,600 | Ditto |
| | . | . | | | | | 500 | | | 500 | Ditto |
| . | | | 1,800 | | | 6,700 | | | | 8,500 | Ditto |
| | | | 700 | | | | | | | 700 | Ditto |
| | | | | | | | | | | 3,900 | Ditto |
| | | | | | | | | | | 1,800 | Ditto |
| | | | 4,200 | | . | | | . | | 4,200 | Ditto |
| | | | 1,800 | | | | | | | 30,900 | Ditto |
| | | | | | | | | | | 1,300 | Ditto |
| | | 3,200 | | | | | | | | 3,200 | Ditto |
| | .. | . | 1,100 | | | 4,700 | | | | 60,500 | Ditto |
| | | | 23,800 | | | | | 25,000 | | 48,800 | Ditto |
| | | | 21,500 | | | | | | | 21,500 | Ditto |
| | | | 1,600 | | | | | | | 56,100 | Ditto |
| . | | | | | | | | | | 15,200 | Ditto |
| | | | | | | | | | | 2,600 | Ditto |
| | | | 3,000 | | | | | | | 3,000 | Ditto |
| | | | 5,600 | | | | | | | 5,600 | Ditto |
| | | | | | | | | | | 26,200 | Ditto |
| . | | | | | | | | | | 11,900 | Ditto |
| | | | | | | | | | | 18,000 | Ditto |
| .. | | | | | | | | | | 7,400 | Ditto |
| .. | | | | | | | . | | | 48,800 | Ditto |
| . | | . | | | | | | | | 600 | Ditto |
| | | | | | | | | | | 4,500 | Ditto |
| | | | | | | | | | | 100 | Ditto |
| | . | | 9,500 | | | | | | | 9,500 | Ditto |
| . | | . | 6,300 | | | | | | | 6,300 | Ditto |
| | . | .. | 7,000 | | . | | | . | | 7,000 | Ditto |
| ... | . | .. | 1,600 | | | | | | | 1,600 | Ditto |
| . | . | . | | . | | | .. | | | 12,200 | Ditto |
| . | ... | .. | . | . | | 11,800 | | | | 18,300 | Ditto |
| .. | .. | .. | 7,900 | . | . | . | | | | 8,000 | Ditto |
| .. | . | . | | | | | | | | 1,700 | Ditto |
| ... | . | .. | 10,700 | | | | | | | 10,700 | Ditto |
| .. | ... | . | 1,300 | . | . | 400 | ... | | | 1,700 | Ditto |
| ... | ... | . | 19,100 | ... | . | ... | .. | | | 19,100 | Ditto |
| ... | .. | 5,000 | 2,25,300 | 2,500 | .. | 4,17,700 | 12,700 | 82,200 | 63,000 | 54,16,900 | |

| Ledger Folio No | Name of Person or Fund on whose behalf held | 4 PER CENT | | | | 3 per cent of 1896-97 | 4 PER CENT | | 5 PER CENT | |
|---|---|---|---|---|---|---|---|---|---|---|
| | | 1842-43 | 1851-55 | 1865. | 1900 01 | | 1915-16 | 1916-17. | 1929-47. | 1945-55 |
| | | Rs | Rs | Rs | Rs | Rs | Rs | Rs | Rs. | Rs. |
| | Brought forward | 8,600 | 54,900 | 42,88,800 | 48,200 | 16,400 | | 12,000 | 17,600 | 1,61,500 |
| 3886 | C I T case No 141 of 1919 (claimants Ammuddin Ahmed, Tamizuddin Ahmed and Noor Mahammad) . | | | | | | | | | |
| 3887 | C I T case No 141 of 1919 (claimant Hossain Banoo) | | | | | | | | | . |
| 3888 | C I T case No 141 of 1919 (claimants Maison Rahaman Abdul Rub and Rabia Khatun) | | | | | | | | | |
| 3889 | C I T case No 141 of 1919 (claimant Mahammad Ismail) | | | . | | | | . | | . |
| 3890 | C I T case No 142 of 1919 . | | | 9,800 | | | | | | . |
| 3891 | C I T case No 144 of 1919 | | . | | | | | | | 1,400 |
| 3892 | C I T case No 146 of 1919 | | | 7,000 | | | | | | |
| 3893 | C I T case No 147 of 1919 | | | 300 | | | | | | |
| 3894 | C I T case No 148 of 1919 | | . | 800 | | | | | | |
| 3895 | C I T case No 149 of 1919 | | | | | | | | | |
| 3896 | C I T case No 150 of 1919 | | | 100 | | | | | | |
| 3898 | C I T case No 153 of 1919 | | | | | | | . | | |
| 3899 | C I T case No 154 of 1919 | | | | | | | | . | |
| 3900 | C I T case No 161 of 1919 | | | 400 | | | | | | |
| 3902 | C I T case No 170 of 1919 | | | 300 | | | | | | |
| 3903 | C I T case No 171 of 1919 | | | | | | | | . | |
| 3904 | C I T case No 174 of 1919 | | | 100 | | | | | . | |
| 3905 | C I T case No 188 of 1919 | | | | | | | | | 16,500 |
| 3906 | C I T case No 192 of 1919 | | | 2,800 | | | | | | |
| 3907 | C I T case No 199 of 1919 | | | | | | . | | . | |
| 3908 | C I T case No 201 of 1919 (claimant Basanta Kumar Pal) | | | | | | | | | 25,200 |
| 3909 | C I T case No 201 of 1919 (claimant Sufala Devi) .. | . | . | .. | | . | | | | 5,000 |
| 3910 | C I T case No 207 of 1919 . | | | | .. | | | | | 24,900 |
| 3911 | C I T case No 208 of 1919 | | | 15,300 | | | | .. | | |
| 3912 | C I T case No 214 of 1919 | | | 2,800 | | | | . | | . |
| 3913 | C I T case No 225 of 1919 | . | | | | | | . | | .. |
| 3914 | C I T case No 229 of 1919 | . | .. | 1,000 | ... | . | ... | .. | .. | ... |
| 3915 | C I T case No 236 of 1919 | | . | . | | .. | | .. | ... | . |
| 3916 | C I T case No 241 of 1919 | | | . | | | .. | .. | .. | .. |
| 3917 | C I T case No 250 of 1919 .. | | . | 1,200 | | | . | ... | ... | . |
| 3919 | C I T case No 259 of 1919 . | | | 1,800 | | . | .. | | . | ... |
| 3920 | C I T case No 276 of 1919 | | . | 2,100 | | | . | ... | . | |
| 3921 | C I T case No 277 of 1919 | | | .. | | | .. | .. | . | 24,100 |
| 3922-3 | C I T case No 279 of 1919 .. | | . | 4,700 | | | | . | .. | .. |
| 3924 | C I T case No 280 of 1919 ... | .. | . | | . | . | . | .. | . | . |
| 3925 | C I T case No 291 of 1919 . | . | ... | | | | . | ... | .. | 46,900 |
| 3926 | C I T case No 294 of 1919 .. | | .. | 33,400 | | | . | . | ... | ... |
| 3927 | C I T case No 302 of 1919 ... | .. | . | 500 | . | . | . | . | ... | 27,700 |
| | Carried over .. | 8,600 | 54,900 | 43,72,600 | 48,700 | 16,400 | ... | 12,000 | 17,600 | 3,33,200 |

| 5½ PER CENT | | | | 6 PER CENT | | | | | Debentures and Railway shares | Total | Name of officer to whom interest is sent |
|---|---|---|---|---|---|---|---|---|---|---|---|
| 1922 | 1923 | 1925 | 1928 | 1926 | 1927 | 1930 | 1931 | 1932 | | | |
| Rs | Rs | Rs | Rs | Rs | Rs | Rs | Rs | Rs | Rs | Rs | |
| | | 5,000 | 2,25,300 | 2,500 | | 4,17,700 | 12,700 | 82,200 | 63,000 | 51,[illegible],000 | |
| | | | 12,300 | | | | | | | 12,300 | President, Calcutta Improvement Tribunal |
| | | | 200 | | | | | | | 200 | Ditto |
| | | | 1,900 | | | | | | | 1,900 | Ditto |
| | | | 400 | | | | | | | 400 | Ditto |
| | | | | | | | | 100 | | 10,200 | Ditto |
| | | | | | | | | | | 1,400 | Ditto |
| | | | | | | | | | | 7,000 | Ditto |
| | | | | | | | | | | 300 | Ditto |
| | | | | | | | | | | 800 | Ditto |
| | | | 1,500 | | | | | | | 4,500 | Ditto |
| | | | 900 | | | | | | | 1,000 | Ditto |
| | | | 9,900 | | | | | | | 9,900 | Ditto |
| | | | 20,000 | | | | | | | 20,000 | Ditto |
| | | | | | | | | | | 400 | Ditto |
| | | | | | | | | | | 800 | Ditto |
| | | | 1,11,900 | | | | | | | 1,11,800 | Ditto |
| | | | | | | | | | | 100 | Ditto |
| | | | | | | | | | | 16,500 | Ditto |
| | | | | | | | | | | 2,800 | Ditto |
| | | | 16,800 | | | | | | | 16,800 | Ditto |
| | | | | | | | | | | 25,200 | Ditto |
| | | | | | | | | | | 5,000 | Ditto |
| | | | | | | | | | | 24,900 | Ditto |
| | | | | | | | | | | 1[illegible],300 | Ditto |
| | | | | | | | | | | 2,800 | Ditto |
| | | | 6,600 | | | | | | | 6,600 | Ditto |
| | | | | | | | | | | 1,000 | Ditto |
| | | | 17,000 | | | | | | | 17,000 | Ditto |
| | | | 3,900 | | | | | | | 3,900 | Ditto |
| | | | | | | | | | | 1,200 | Ditto |
| | | | | | | | | | | 1,300 | Ditto |
| | | | | | | | | | | 2,100 | Ditto |
| | | | | | | | | | | 24,100 | Ditto |
| | | | | | | | | | | 1,700 | Ditto |
| | | | 2,900 | | | | | | | 2,900 | Ditto |
| | | | | | | | | | | 46,900 | Ditto |
| | | | | | | | | | | 13,400 | Ditto |
| | | | | | | | | | | 28,200 | Ditto |
| | | 5,000 | 4,53,900 | 2,500 | | 4,17,700 | 12,700 | 82,600 | 63,000 | 59,01,400 | |

| Ledger Folio No | Name of Person or Fund on whose behalf held | 3½ PER CENT | | | | 3 per cent of 1896-97 | 4 PER CENT | | 5 PER CENT | |
|---|---|---|---|---|---|---|---|---|---|---|
| | | 1842-43 | 1854-55 | 1865 | 1900-01 | | 1915-16 | 1916-17 | 1929-47 | 1945-50 |
| | | Rs | Rs | Rs | Rs | Rs | Rs | Rs | Rs | Rs |
| | Brought forward | 8,600 | 54,900 | 43,72,600 | 48,700 | 16,400 | | 12,000 | 17,600 | 3,53,200 |
| 3928 | C I T case No 309 of 1919 (claimant Nayanmoni Devi) | | | | | | | | | 2,800 |
| 3929 | C I T case No 309 of 1919 (claimant Sulabala Devi) | | | | | | | | | 2,800 |
| 3931 | C I T case No 311 of 1919 | | | 500 | | | | | | |
| 3932 | C I T case No 312 of 1919 | | | 600 | | | | | | |
| 3933 | C I T case No 313 of 1919 | | | | | | | | | 500 |
| 3935 | C I T case No 321 of 1919 | | | | | | | | | 10,600 |
| 3936 | C I T case No 316 of 1919 (claimant Kaisari Begum, minor) | | | 1,000 | | | | | | |
| 3937 | C I T case No 346 of 1919 (claimant Ahmedi Hossein, minor) | | | 1,100 | | | | | | |
| 3938 | C I T case No 351 of 1919 | | | | | | | | | |
| 3939 | C I T case No 374 of 1919 | | | | | | | | | 19,000 |
| 3940 | C I T case No 376 of 1919 | | | | | | | | | |
| 3940 | C I T case No 379 of 1919 | | | | | | | | | |
| 3941 | C I T case No 394 of 1919 | | | | | | | | | |
| 3942 | C I T case No 397 of 1919 | | | | | | | | | |
| 3943 | C I T case No 401 of 1919 | | | 5,800 | | | | | | |
| 3946 | C I T case No 1 of 1920 | | | | | | | | | |
| 3947 | C I T case No 3 of 1920 | | | | | | | | | |
| 3949 | C I T case No 25 of 1920 | | | | | | | | | 5,500 |
| 3950 | C I T case No 27 of 1920 | | | 9,100 | | | | | | |
| 3951 | C I T case No 31 of 1920 | | | 1,000 | | | | | | |
| 3952 | C I T case No 33 of 1920 | | | | | | | | | |
| 3953 | C I T case No 35 of 1920 | | | | | | | | | |
| 3954 | C I T case No 43 of 1920 | | | | | | | | | |
| 3955 | C I T case No 44 of 1920 | | | 300 | | | | | | |
| 3958 | C I T case No 81 of 1920 | | | | | | | | | |
| 3959 | C I T case No 82 of 1920 | | | 2,000 | | | | | | |
| 3962 | C I T case No 115 of 1920 (claimant Samsunnessa Bibi) | | | | | | | | | |
| 3963 | C I T case No 119 of 1920 | | | 100 | | | | | | |
| 3963 | C I T case No 123 of 1920 | | | | | | | | | |
| 3964 | C I T case No 127 of 1920 | | | 500 | | | | | | |
| 3964 | C I T case No 128 of 1920 | | | 400 | | | | | | |
| 3965 | C I T case No 137 of 1920 | | | 600 | | | | | | |
| 3966 | C I T case No 138 of 1920 | | | | | | | | | |
| 3966 | C I T case No 141 of 1920 | | | | | 200 | | | | |
| 3967 | C I T case No 142 of 1920 | | | | | | | | | |
| | Carried over | 8,600 | 54,900 | 43,91,600 | 48,700 | 16,600 | | 12,000 | 17,600 | 3,74,400 |

| 5½ per cent | | | | 6 per cent | | | | | Debentures and Railway shares | Total | Name of officer to whom interest is sent |
|---|---|---|---|---|---|---|---|---|---|---|---|
| 1922 | 1923 | 1925 | 1926 | 1926 | 1927 | 1930 | 1931 | 1932 | | | |
| Rs | Rs | Rs | Rs | Rs | Rs | Rs | Rs | Rs | Rs | Rs | |
| | | 5,000 | 4,55,900 | 2,500 | | 4,17,000 | 12,000 | 82,600 | 63,000 | 60,01,100 | |
| | | | | | | | | | | 2,800 | President, Calcutta Improvement Tribunal |
| | | | | | | | | | | 2,800 | Ditto |
| | | | | | | | | | | 500 | Ditto |
| | | | | | | | | | | 600 | Ditto |
| | | | | | | | | | | 500 | Ditto |
| | | | | | | | | | | 10,600 | Ditto |
| | | | | | | | | | | 1,000 | Ditto |
| | | | | | | | | | | 4,100 | Ditto |
| | | | | | | 19,600 | 500 | | | 20,000 | Ditto |
| | | | | | | | | | | 19,000 | Ditto |
| | | | | | | 11,200 | | | | 11,200 | Ditto |
| | | | | | | 600 | | | | 600 | Ditto |
| | | | 2,200 | | | | | | | 2,200 | Ditto |
| | | | | | | 2,100 | | | | 2,100 | Ditto |
| | | | | | | | | | | 2,800 | Ditto |
| | | | 12,000 | | | | | | | 12,000 | Ditto |
| | | | | | | 8,000 | | | | 8,000 | Ditto |
| | | | | | | | | | | 6,500 | Ditto |
| | | | | | | | | | | 2,100 | Ditto |
| | | | | | | | | | | 1,000 | Ditto |
| | | | 6,700 | | | | | | | 6,700 | Ditto |
| | | | | | | 6,500 | | | | 6,500 | Ditto |
| | | | 5,400 | | | | | | | 5,400 | Ditto |
| | | | | | | | | | | 300 | Ditto |
| | | | 3,500 | | | | | | | 3,500 | Ditto |
| | | | | | | | | | | 2,000 | Ditto |
| | | | | | | 500 | | | | 500 | Ditto |
| | | | | | | | | | | 100 | Ditto |
| | | | | | | 4,000 | | | | 4,000 | Ditto |
| | | | | | | | | | | 500 | Ditto |
| | | | | | | | | | | 100 | Ditto |
| | | | | | | | | | | 600 | Ditto |
| | | ... | | | | 800 | | | | 800 | Ditto |
| | | | | | | | | | | 200 | Ditto |
| | | | 10,200 | | | | | | | 10,200 | Ditto |
| ... | | 5,000 | 4,95,900 | 2,500 | | 4,70,900 | 13,200 | 82,600 | 63,000 | 60,55,500 | |

| Ledger Folio No | Name of Person or Fund on whose behalf held | 3½ PER CENT | | | | 3 per cent of 1896-97 | 4 PER CENT | | 5 PER CENT | |
|---|---|---|---|---|---|---|---|---|---|---|
| | | 1842-43 | 1854-55 | 1865. | 1900 01 | | 1915-16 | 1916-17 | 1929-47 | 1945-55 |
| | | Rs | Rs | Rs | Rs | Rs | Rs | Rs | Rs | Rs |
| | Brought forward | 8,600 | 54,900 | 43,91,600 | 48,700 | 16,600 | | 12,000 | 17,600 | 3,74,400 |
| 3945 | C I T case No 141 of 1920 | | | 100 | | | | | | |
| 3968 | C I T case No 147 of 1920 (claimant Akram Hossein) | | | | | | | | | |
| 3968 | C I T case No 147 of 1920 (claimant Kariz Kobra Bibi) | | | | | | | | | |
| 3969 | C I T case No 148 of 1920 | | | 900 | | | | | | |
| 3969 | C I T case No 148 of 1920 (claimant Ramjan Ali) | | | | | | | | | |
| 3969A | C I T case No 148 of 1920 (claimant Golam Jelani and Joymal Abdin) | | | | | | | | | |
| 3970 | C I T case No 154 of 1920 | | | 600 | | | | | | |
| 3970 | C I T case No 155 of 1920 | | | | | | | | | |
| 3971 | C I T case No 164 of 1920 | | | | | | | | | |
| 3971 | C I T case No 170 of 1920 | | | | | | | | | |
| 3972 | C I T case No 178 of 1920 | | | | | | | | | |
| 3973 | C I T case No 182 of 1920 | | | | | | | | | |
| 3973 | C I T case No 212 of 1920 | | | | | | | | | |
| 3974 | C I T case No 213 of 1920 | | | | | | | | | |
| 3975 | C I T case No 224 of 1920 | | | | | | | | | |
| 3976 | C I T case No 236 of 1920 | | | | | | | | | |
| 3975 | C I T case No 240 of 1920 | | | | | | | | | |
| 3990 | C I T case No 241 of 1920 (claimant Mushiber Rahman) | | | | | | | | | |
| 3990 | C I T case No 243 of 1920 (claimant Abdur Rub) | | | | | | | | | |
| 3990 | C I T case No 243 of 1920 (claimant Rabia Khatoon) | | | | | | | | | |
| 3990 | C I T case No 243 of 1920 (claimant Chidanessa Bibi) | | | | | | | | | |
| 3991 | C I T case No 243 of 1920 (claimant Badrunessa Bibi) | | | | | | | | | |
| 3991 | C I T case No 243 of 1920 (claimant Lahifatenessa Bibi) | | | | | | | | | |
| 3991 | C I T case No 243 of 1920 (claimant Abdul Mannan) | | | | | | | | | |
| 3991 | C I T case No 243 of 1920 (claimant Hosan Banu) | | | | | | | | | |
| 3991 | C I T case No 243 of 1920 (claimant Mahamad Ismail) | | | | | | | | | |
| 3991 | C I T case No 243 of 1920 (claimant Shaik Amiruddin Ahmed) | | | | | | | | | |
| 3976 | C I T case No 252 of 1920 | | | | | | | | | |
| 3977 | C I T case No 251 of 1920 | | | | | | | | | |
| 3992 | C I T case No 263 of 1920 | | | | | | | | | |
| 3977 | C I T case No 266 of 1920 | | | | | | | | | |
| 3978 | C I T case No 277 of 1920 | | | | | | | | | |
| 3977 | C I T case No 278 of 1920 | | | | | | | | | |
| 3978 | C I T case No 279 of 1920 | | | | | | | | | |
| | Carried over | 8,600 | 54,900 | 43,93,200 | 48,700 | 16,600 | | 12,000 | 17,600 | 3,74,400 |

| 5½ PER CENT | | | | 6 PER CENT | | | | | Debentures and Railway shares | Total | Name of officer to whom interest is sent |
|---|---|---|---|---|---|---|---|---|---|---|---|
| 1922 | 1923. | 1925 | 1928 | 1926 | 1927 | 1930 | 1931 | 1932. | | | |
| Rs | Rs | Rs | Rs | Rs | Rs | Rs | Rs | Rs | Rs | Rs | |
| | | 5,000 | 1,93,900 | 2,500 | | 4,70,900 | 13,200 | 82,600 | 63,000 | 60,55,500 | |
| | | | | | | 900 | 3,000 | | | 4,400 | President, Calcutta Improvement Tribunal |
| | | | | | | 800 | | | | 800 | Ditto |
| | | | | | | 400 | | | | 400 | Ditto |
| | | | | | | | | | | 900 | Ditto |
| | | | | | | | 100 | | | 100 | Ditto |
| | | | | | | | 400 | | | 400 | Ditto |
| | | | | | | | | | | 600 | Ditto |
| | | | | | | 1,100 | | | | 1,100 | Ditto |
| | | | | | | 6,500 | | | | 6,500 | Ditto |
| | | | | | | 2,700 | | | | 2,700 | Ditto |
| | | | | | | 14,500 | | | | 14,500 | Ditto |
| | | | | | | 14,400 | | | | 14,400 | Ditto |
| | | | | | | | | 9,600 | | 9,600 | Ditto |
| | | | | | | 11,200 | | | | 11,200 | Ditto |
| | | | | | | 7,900 | | | | 7,900 | Ditto |
| | | | | | | 800 | | | | 800 | Ditto |
| | | | | | | 23,200 | | | | 23,200 | Ditto |
| | | | | 6,500 | | | | | | 6,500 | Ditto |
| | | | | 6,500 | | | | | | 6,500 | Ditto |
| | | | | 2,400 | | | | | | 2,400 | Ditto |
| | | | | 3,400 | | | | | | 3,400 | Ditto |
| | | | | 1,200 | | | | | | 1,200 | Ditto |
| | | | | 1,200 | | | | | | 1,200 | Ditto |
| | | | | 2,400 | | | | | | 2,400 | Ditto |
| | | | | 2,700 | | | | | | 2,700 | Ditto |
| | | | | 1,500 | | | | | | 1,500 | Ditto |
| | | | | 78,600 | | | | | | 78,600 | Ditto |
| | | | | | | 17,000 | | | | 17,000 | Ditto |
| | | | | | | 6,800 | | | | 6,800 | Ditto |
| | | | | | | | 2,000 | | | 2,000 | Ditto |
| | | | | | | | 11,200 | | | 11,200 | Ditto |
| | | | | | | 400 | | | | 400 | Ditto |
| | | | | | | 10,300 | | | | 10,300 | Ditto |
| | | | | | | 20,800 | | | | 20,800 | Ditto |
| | .. | 5,000 | 4,93,900 | 1,08,900 | ... | 6,10,200 | 20,900 | 92,200 | 63,000 | 63,29,100 | |

| Ledger Folio No | Name of person or Fund on whose behalf held | 3½ PER CENT | | | | 3 per cent of 1896-97 | 4 PER CENT | | 5 PER CENT | |
|---|---|---|---|---|---|---|---|---|---|---|
| | | 1842-43 | 1854-55 | 1865 | 1900-01 | | 1915-16 | 1916 17 | 1929 47 | 1915-55 |
| | | Rs | Rs | Rs | Rs | Rs | Rs | Rs | Rs | Rs |
| | Brought forward | 8,600 | 54,900 | 43,91,200 | 48,700 | 16,600 | | 12,000 | 17,600 | 3,74,400 |
| 3978 | C I T case No 280 of 1920 | | | | | | | | | |
| 3980 | C I T case No 287 of 1920 | | | | | | | | | |
| 3979 | C I T case No 290 of 1920 | | | | | | | | | |
| 3979 | C I T case No 299 of 1920 | | | 12,200 | | | | | | |
| 3980 | C I T case No 300 of 1920 | | | 89,800 | | | | | | |
| 3982 | C I T case No 302 of 1920 (claimant Hamira Khatoon) | | | | | | | | | |
| 3982 | C I T case No 302 of 1920 (claimant Syed Hossain Ali) | | | | | | | | | |
| 3980 | C I T case No 304 of 1920 | | | | | | | | | |
| 3981 | C I T case No 309 of 1920 | | | | | | | | | |
| 3981 | C I T case No 310 of 1920 | | | 6,800 | | | | | | |
| 3703 | C I T case No 13 of 1921 | | | | | | | | | |
| 3705 | C I T case No 22 of 1921 | | | | | | | | | |
| 3706 | C I T case No 23 of 1921 | | | | | | | | | |
| 3706 | C I T case No 24 of 1921 | | | | | | | | | |
| 3707 | C I T case No 30 of 1921 | | | | | | | | | |
| 3983 | C I T case No 31 of 1921 (claimant Sitaldas Mitra) | | | | | | | | | |
| 3983 | C I T case No 33 of 1921 (claimant Sarojini Dasi) | | | | | | | | | |
| 3983 | C I T case No 34 of 1921 (claimant Usharam Dasi) | | | | | | | | | |
| 3704 | C I T case No 36 of 1921 | | | | | 100 | | | | |
| 3704 | C I T case No 37 of 1921 | | | | | | | | | |
| 3984 | C I T case No 42 of 1921 | | | | | | | | | |
| 3707 | C I T case No 43 of 1921 | | | | | | | | | |
| 3708 | C I T case No 45 of 1921 | | | | | | | | | |
| 3711 | C I T case No 59 of 1921 | | | | | | | | | |
| 3714 | C I T case No 63 of 1921 | | | | | | | | | |
| 3717 | C I T case No 69 of 1921 (claimant Altapannesa Bibi) | | | | | | | | | |
| 3715 | C I T case No 66 of 1921 | | | | | | | | | |
| 3717 | C I T case No 69 of 1921 (claimant Nuranessa Bibi) | | | | | | | | | |
| 3717 | C I T case No 69 of 1921 (claimant Syed Jabadali) | | | | | | | | | |
| 3717 | C I T case No 69 of 1921 (claimant Yakad Ali) | | | | | | | | | |
| 3717 | C I T case No 69 of 1921 (claimant Jawadali) | | | | | | | | | |
| 3984 | C I T case No 72 of 1921 | | | | | | | | | |
| 3984 | C. I T case No 76 of 1921 | | | | | | | | | |
| 3984 | C. I T case No 78 of 1921 | | | | | | | | | |
| 3985 | C I T case No 83 of 1921 | | | | | | | | | |
| 3985 | C I T case No 84 of 1921 | ... | | | | | | | | |
| 3726 | C I. T case No 85 of 1921 | | | | | | | | | |
| | Carried over | 8,600 | 54,900 | 45,09,000 | 48,700 | 16,700 | | 12,000 | 17,600 | 3,74,400 |

| 5½ PER CENT | | | | 6 PER CENT | | | | | Debentures and Railway shares | Total | Name of officer to whom interest is sent |
|---|---|---|---|---|---|---|---|---|---|---|---|
| 1922 | 1923 | 1925 | 1928 | 1926 | 1927 | 1930 | 1931 | 1932 | | | |
| Rs | Rs | Rs | Rs | Rs | Rs | Rs | Rs | Rs | Rs | Rs | |
| | | 5,000 | 4,93,900 | 1,08,900 | | 6,10,200 | 29,900 | 92,200 | 67,000 | 13,29,100 | |
| | | | | | | 21,400 | | | | 21,400 | President, Calcutta Improvement Tribunal |
| | | | | | | | 54,200 | | | 54,200 | Ditto |
| | | | | | | 1,000 | | | | 1,000 | Ditto |
| | | | | | | 10,700 | | | | 29,900 | Ditto |
| | | | | | | | | | | 89,800 | Ditto |
| | | | | | | 900 | | | | 900 | Ditto |
| | | | | | | 1,800 | | | | 1,800 | Ditto |
| | | | | | | 1,400 | | | | 1,400 | Ditto |
| | | | | 400 | | 7,100 | | | | 7,500 | Ditto |
| | | | | | | | | | | 6,800 | Ditto |
| | | | | | | 2,100 | | | | 2,100 | Ditto |
| | | | | | | 17,200 | | | | 17,200 | Ditto |
| | | | | | | 7,500 | | | | 7,500 | Ditto |
| | | | | | | 16,400 | | | | 16,400 | Ditto |
| | | | | | | | 2,500 | | | 2,500 | Ditto |
| | | | | | | 26,800 | | | | 26,800 | Ditto |
| | | | | | | 15,900 | | | | 15,900 | Ditto |
| | | | | | | 15,900 | | | | 15,900 | Ditto |
| | | | | | | | 5,200 | | | 5,200 | Ditto |
| | | | | | | 14,500 | | | | 14,500 | Ditto |
| | | | | | | 3,200 | | | | 3,200 | Ditto |
| | | | | | | 20,200 | | | | 20,200 | Ditto |
| | | | | | | 14,800 | | | | 14,800 | Ditto |
| | | | | | | 3,400 | | | | 3,400 | Ditto |
| | | | | | | | | 500 | | 500 | Ditto |
| | | | | | | 2,100 | | | | 2,100 | Ditto |
| | | | | | | | 2,900 | | | 2,900 | Ditto |
| | | | | | | 2,100 | | | | 2,100 | Ditto |
| | | | | | | 4,200 | | | | 4,200 | Ditto |
| | | | | | | 4,200 | | | | 4,200 | Ditto |
| | | | | | | 4,200 | | | | 4,200 | Ditto |
| | | | | | | | 800 | | | 800 | Ditto |
| | | | | | | | 100 | | | 100 | Ditto |
| | | | | | | | 24,000 | | | 24,000 | Ditto |
| | | | | 15,700 | | | | | | 15,700 | Ditto |
| | | | | | | 1,09,600 | | | | 1,[illegible],600 | Ditto |
| | | | | | | | | 1,500 | | 1,500 | Ditto |
| ... | .. | 5,000 | 4,93,900 | 1,25,000 | | 9,41,700 | 1,19,600 | 94,200 | 63,000 | 68,84,300 | |

| Ledger Folio No | Name of Person or Fund on whose behalf held | 3½ PER CENT | | | | 3 per cent of 1896 97 | 4 PER CENT | | 5 PER CENT | |
|---|---|---|---|---|---|---|---|---|---|---|
| | | 1842 43 | 1854-55 | 1865 | 1900 01 | | 1915 16 | 1916-17 | 1929-47 | 1945-55 |
| | | Rs. | Rs | Rs | Rs | Rs | Rs | Rs | Rs | Rs |
| | Brought forward | 8,600 | 54,900 | 45,09,000 | 48,700 | 16,700 | | 12,000 | 17,600 | 3,74,400 |
| 3727 | C I T case No 86 of 1921 | | | 19,700 | | | | | | .. |
| 3797 | C I T case No 97 of 1921 | | | | | | | | | |
| 3986 | C I T case No 100 of 1921 (claimant Prafulla Chandra Ghosh) | | | | | | | | | |
| 3986 | C I T case No 100 of 1921 (claimant Dhirendra Nath Ghosh) | | | | | | | | | |
| 3987 | C I T case No 123 of 1921 | | | 100 | | | | | | |
| 3986 | C I T case No 140 of 1921 | | | | | | | | | |
| 3787 | C I T case No 144 of 1921 (claimant Purna Chandra Mallick) | | | | | | | | | |
| 3787 | C I T case No 144 of 1921 (claimant Kanaklata Dassi) | | | | | | | | | |
| 3988 | C I T case No 156 of 1921 | | | | | | | | | |
| 3988 | C I T case No 157 of 1921 | | | | | | | | | |
| 3988 | C I T case No 162 of 1921 | | | | | | | | | |
| 3728 | C I T case No 172 of 1921 | | | 1,600 | | | | | | |
| 3989 | C I T case No 174 of 1921 (claimant Sarojini Dassi) | | | | | | | | | |
| 3989 | C I T case No 174 of 1921 (claimant Sital Das Mitra) | | | | | | | | | |
| 3989 | C I T case No 174 of 1921 (claimant Maharani Dassi) | | | | | | | | | |
| 3729 | C I T case No 176 of 1921 (claimant Sarojini Dassi) | | | | | | | | | |
| 3729 | C I T case No 176 of 1921 (claimant Usharani Dassi) | | | | | | | | | |
| 3732 | C I T case No 186 of 1921 (claimant Nityi Kali Dassi) | | | | | | | | | |
| 3732 | C I T case No 186 of 1921 (claimant Siddeswari Dassi) | | | | | | | | | |
| 3732 | C I T case No 186 of 1921 (claimant Saraswati Dassi) | | | | | | | | | |
| 3732 | C I T case No 186 of 1921 (claimant Hari Dasi Dassi) | | | | | | | | | |
| 3732 | C I T case No 186 of 1921 (claimant Hiramati Dassi) | | | | | | | | | |
| 3732 | C I T case No 186 of 1921 (claimant Achala Dassi) | | | | | | | | | |
| 3732 | C I T case No 186 of 1921 (claimant Ranubala Dassi) | | | | | | | | | |
| 3732 | C I T case No 186 of 1921 (claimant Bhola Dassi) | | | | | | | | | |
| 3734 | C I T case No 186 of 1921 (claimant Siddeswari Dassi) | | | | | | | | | |
| 3734 | C I T case No 186 of 1921 (claimant Achala Dassi) | | | | | | | | | |
| 3734 | C I T case No 186 of 1921 (claimant Basanta Kumari Dassi) | | | | | | | | | |
| 3734 | C. I T case No 186 of 1921 (claimant Ranubala Dassi) | .. | .. | | | | | | | .. |
| | Carried over .. | 8,600 | 54,900 | 45,60,400 | 48,700 | 16,700 | | 12,000 | 17,600 | 3,74,400 |

| 5½ per cent | | | | 6 per cent | | | | | Debentures and Railway shares | Total | Name of officer to whom interest is sent |
|---|---|---|---|---|---|---|---|---|---|---|---|
| 1922 | 1923 | 1925 | 1928 | 1926 | 1927 | 1930 | 1931 | 1932 | | | |
| Rs | Rs | Rs | Rs | Rs | Rs | Rs | Rs | Rs | Rs | | |
| | | 5,000 | 4,93,900 | 1,25,000 | | 9,41,700 | 1,19,600 | 91,200 | 63,000 | 68,84,300 | |
| | | | | | | | | | | 19,700 | President, Calcutta Improvement Tribunal |
| | | | | | | | 300 | | | 300 | Ditto |
| | | | | | | | 1,500 | | | 1,500 | Ditto |
| | | | | | | | 1,500 | | | 1,500 | Ditto |
| | | | | | | 1,200 | 800 | | | 2,100 | Ditto |
| | | | | | | 3,600 | 8,600 | | | 12,200 | Ditto |
| | | | | | | | 1,500 | | | 1,500 | Ditto |
| | | | | | | | 1,700 | | | 1,700 | Ditto |
| | | | | | | 97,900 | 1,89,600 | | | 1,87,500 | Ditto |
| | | | | | | 200 | | | | 200 | Ditto |
| | | | | | | | 2,200 | | | 2,200 | Ditto |
| | | | | | | | | | | 1,000 | Ditto |
| | | | | | | 2,400 | | | | 2,400 | Ditto |
| | | | | | | 8,000 | | | | 8,000 | Ditto |
| | | | | | | 2,100 | | | | 2,100 | Ditto |
| | | | | | | 2,000 | | | | 2,000 | Ditto |
| | | | | | | 2,000 | | | | 2,000 | Ditto |
| | | | | | | | 500 | | | 500 | Ditto |
| | | | | | | | 1,100 | | | 1,100 | Ditto |
| | | | | | | | 500 | | | 500 | Ditto |
| | | | | | | | 1,100 | | | 1,100 | Ditto |
| | | | | | | | 3,300 | | | 3,300 | Ditto |
| | | | | | | | 2,200 | | | 2,200 | Ditto |
| | | | | | | | 27,100 | | | 27,100 | Ditto |
| | | | | | | | 2,000 | | | 2,000 | Ditto |
| | | | | | | | 2,000 | | | 2,000 | Ditto |
| | | | | | | | 3,000 | | | 3,000 | Ditto |
| | | | | | | | 3,000 | | | 3,000 | Ditto |
| | | | | | | | 3,000 | | | 3,000 | Ditto |
| | ... | 5,000 | 4,93,900 | 1,25,000 | | 10,61,400 | 5,76,100 | 91,200 | 63,000 | 75,11,900 | |

| Ledger Folio No | Name of Person or Fund on whose behalf held | 3½ PER CENT | | | | 3 per cent of 1896-97. | 4 PER CENT | | 5 PER CENT | |
|---|---|---|---|---|---|---|---|---|---|---|
| | | 1842-43 | 1854-55 | 1865 | 1900-01 | | 1915-16 | 1916-17 | 1929-47 | 1945-55 |
| | | Rs | Rs | Rs | Rs | Rs | Rs | Rs | Rs | Rs |
| | Brought forward | 8,600 | 54,900 | 45,60,400 | 48,700 | 16,700 | . | 12,000 | 17,600 | 3,74,400 |
| 3734 | C I T case No 186 of 1921 (claimant Pravanani Dassi) . | | | | | | | | | |
| 3734 | C I T case No 186 of 1921 (claimant Nabanandini Dassi) | | | | | | | | | |
| 3734 | C I T case No 186 of 1921 (claimant Tarubala Dassi, widow of Satyabrata Nandi) | | | | | | . | | | . |
| 3730 | C I T case No 187 of 1921 (claimant Krishna Kumar Nandi and Balai Chand Nandi) | | | | | | | | . | |
| 3730 | C I T case No 187 of 1921 (claimant Bankim Chandra Nandi) | | | | | | | | | |
| 3731 | C I T case No 187 of 1921 (claimant Shibsoshi Nandi) | | | | | | | | | |
| 3731 | C I T case No 187 of 1921 (claimant Balaichand Nandi and Surya Prasad Nandi) | | | | | | | | | |
| 3731 | C I T case No 187 of 1921 (claimant Panchu Gopal Nandi and Nani Gopal Nandi) | | | | . | | | | | |
| 3731 | C I T case No 187 of 1921 (claimant Shaileswar Nandi) | | | | . | | | | | |
| 3733 | C I T case No 190 of 1921 | | | | | | | | | |
| 3734 | C I T case No 191 of 1921 (claimant Prafulla Chandra Mukherji) | | | | | | | | | |
| 3743 | C I T case No 191 of 1921 (claimant Amarendra Nath Mukherji) | | | | | | . | | | |
| 3735 | C I T case No 200 of 1921 | | | | | | | | | |
| 3736 | C I T case No 208 of 1921 | | | | | | | | | |
| 3737 | C I T case No 211 of 1921 | | | | | | | . | | |
| 3738 | C I T case No 224 of 1921 | | | | | | | | | |
| 3736 | C I T case No 13 of 1922 | | | | | . | .. | | | |
| 3738 | C I T case No 14 of 1922 | | | | | | | | | |
| 3738 | C I T case No 29 of 1922 | | | | . | 100 | | | . | |
| 3740 | C I T case No 30 of 1922 | | | 200 | | | | . | . | |
| 3740 | C I T case No 31 of 1922 | | | 100 | | | | | . | |
| 3739 | C I T case No 37 of 1922 (claimant Rabiul Haque) | | | | | | | | | |
| 3739 | C I T case No 37 of 1922 (claimant Samsul Haque) | | | | . | . | | | | . |
| 3739 | C I T case No 37 of 1922 (claimant Shajadi) . | | . | . | | | | . | | |
| 3738 | C I T case No 47 of 1922 | | | 15,800 | | | | . | | .. |
| 3739 | C I T case No 48 of 1922 . | | | | .. | | | .. | | .. |
| 3740 | C I T case No 51 of 1922 | | | | . | | ... | | | .. |
| 3737 | C I T case No 53 of 1922 .. | . | . | | | | | | . | .. |
| 3740 | C I T case No. 54 of 1922 | | . | | | | . | . | ... | .. |
| 3740 | C I T case No 84 of 1922 | .. | | .. | | . | | ... | . | . |
| 3741 | C I T case No 85 of 1922 .. | . | . | . | | . | .. | | .. | . |
| 3741 | C I T case No 93 of 1922 .. | .. | | | .. | ... | ... | .. | . | ... |
| | Carried over .. | 8,600 | 54,900 | 45,76,200 | 48,700 | 16,800 | .. | 12,000 | 17,600 | 3,74,400 |

| 5½ PER CENT | | | | 6 PER CENT | | | | | Debentures and Railway shares | Total | Name of officer to whom interest is sent |
|---|---|---|---|---|---|---|---|---|---|---|---|
| 1922 | 1923 | 1925 | 1928 | 1926 | 1927 | 1930 | 1931 | 1932 | | | |
| Rs | Rs | Rs | Rs | Rs | Rs | Rs | Rs | Rs | Rs | Rs | |
| | | 5,000 | 4,93,900 | 1,25,000 | | 10,61,400 | 5,76,100 | 94,200 | 63,000 | 23,11,900 | |
| .. | | | | | | | 500 | | | 500 | President, Calcutta Improvement Tribunal |
| | | | | | | | 500 | | | 500 | Ditto |
| | | | | | | | 500 | | | 500 | Ditto |
| | | | | | | 300 | | | | 300 | Ditto |
| | | | | | | 500 | | | | 500 | Ditto |
| | | | | | | 1,100 | | | | 1,100 | Ditto |
| ... | | | | | | 3,300 | | | | 3,300 | Ditto |
| | | | | | | 1,200 | | | | 1,200 | Ditto |
| | | | | | | 6,000 | | | | 6,000 | Ditto |
| | | | | | | 1,400 | | | | 1,400 | Ditto |
| | | | | | | | 1,200 | | | 1,200 | Ditto |
| | | | | | | | 600 | | | 600 | Ditto |
| | | | | | | | 28,500 | | | 28,500 | Ditto |
| | | | | ... | | | 1,800 | | | 1,800 | Ditto |
| | | | | | | 1,000 | | | | 1,000 | Ditto |
| | | | | | | 39,600 | | | | 39,600 | Ditto |
| | | | | | | 1,21,700 | | | | 1,21,700 | Ditto |
| | | | | | | | | 46,800 | | 46,800 | Ditto |
| | | | | | | | | | | 100 | Ditto |
| | | | | | | | | | | 200 | Ditto |
| | | | | | | | | | | 100 | Ditto |
| | | | | | | | 500 | | | 500 | Ditto |
| | | | | | | | 500 | | | 500 | Ditto |
| | | | | | | | 200 | | | 200 | Ditto |
| | | | | | | | | | | 15,500 | Ditto |
| | | | | | | 4,300 | | | | 4,300 | Ditto |
| | | | | | | | 700 | | | 700 | Ditto |
| | | | | | | 10,000 | | | | 10,000 | Ditto |
| | | | | | | 3,90,400 | | 1,08,400 | | 4,98,800 | Ditto |
| .. | | | .. | | | | 46,900 | 400 | | 47,300 | Ditto |
| | | | | | | 1,700 | | | | 1,700 | Ditto |
| | | | .. | | ... | | 2,300 | | | 2,300 | Ditto |
| | | 5,000 | 4,93,900 | 1,25,000 | | 16,43,900 | 6,60,800 | 2,49,800 | 63,000 | 32,50,600 | |

| Ledger Folio No | Name of Person or Fund on whose behalf held | 3½ PER CENT | | | | 3 per cent of 1896-97 | 4 PER CENT | | 5 PER CENT | |
|---|---|---|---|---|---|---|---|---|---|---|
| | | 1842-43 | 1851-55. | 1865 | 1900-01 | | 1915-16 | 1916-17 | 1929 47 | 1945-55 |
| | | Rs | Rs | Rs | Rs | Rs | Rs | Rs | Rs | Rs |
| | Brought forward | 8,600 | 54,900 | 45,76,200 | 48,700 | 16,800 | | 12,000 | 17,600 | 3,74,400 |
| 3742 | C I T case No 95 of 1922 | | | | | | | | | |
| 3741 | C I T case No 109 of 1922 | | | | | | | | | |
| 3743 | C I T case No 111 of 1922 | | | | | | | | | |
| 3741A | C I T case No 123 of 1922 | | | | | | | | | |
| 3741A | C I T case No 126 of 1922 | | | | | | | | | |
| 3742 | C I T case No 130 of 1922 | | | | | | | | | |
| 3743 | C I T case No 133 of 1922 | | | | | | | | | |
| 3742 | C I T case No 136 of 1922 | | | | | | | | | |
| 3744 | C I T case No 140 of 1922 | | | | | | | | | |
| 3744 | C I T case No 147 of 1922 | | | | | | | | | |
| 3746 | C I T case No 153 of 1922 | | | | | | | | | |
| 3746 | C I T case No 168 of 1922 | | | | | | | | | |
| 3747 | C I T case No 229 of 1922 | | | 100 | | | | | | |
| 3747 | C I T case No 230 of 1922 | | | | | | | | | |
| 2791 | Shamaldhan Mukherjee, Nazir and cashier | | | 1,200 | | | | | | |
| 2792 | Ananda Prosad Chakravarti, Cashier | | | 1,900 | | | | | | |
| 2793 | Sisir Kumar Ghose, Assistant Cashier | | | 700 | | | | | | |
| 2795 | Sudhansu Kumar Mitra, under the Press Act | | | 1,000 | | | | | | |
| 2797 | Ambika Prosad Bajpai, under the Press Act | | | | | | | | | |
| 2803 | Maulvi Abdul Monaf, under the the Press Act | | | | 900 | | | | | |
| 2804 | Satyendra Narain Mukherji, underthe Press Act | | | | | 500 | | | | |
| 2805 | Upendra Nath Das, under the Press Act | 500 | | | 500 | | | | | |
| 2808 | Mahadeo Prosad Seth, under the Press Act | | | | | 500 | | | | |
| 2815 | Rekhab Das Bahite, under the Press Act | | | | | | | | | |
| 2821 | Asutosh Bhattacharji, Salesman, Jail Depôt | | | | 800 | | | | | |
| 2823 | Asit Kumar Ganguli, Jailor | | | 1,900 | | 100 | | | | |
| 2824 | Aswini Kumar Chaudhury, Jailor | | | 1,000 | | | | | | |
| 2825 | Barlya Nath Chakravarti, Jailor | | | 500 | | | | | | |
| 2826 | Barada Prasanna Chakravarti, Jailor | | | 1,000 | | | | | | |
| 2828 | Rai Sahib Chakanlal Bhattacharji, Jailor | | | 2,000 | | | | | | |
| 2829 | Chandra Kumar Mitra, Jailor | | | | | 2,000 | | | | |
| 2830 | Digendra Bhushan Ghose, Jailor | | ... | 300 | | | | | | |
| | Carried over | 9,100 | 54,900 | 45,87,100 | 50,900 | 19,900 | ... | 12,000 | 17,600 | 3,74,400 |

| 5½ per cent | | | | 6 per cent | | | | | Debentures and Railway shares | Total | Name of officer to whom interest is sent |
|---|---|---|---|---|---|---|---|---|---|---|---|
| 1922 | 1923. | 1925 | 1928 | 1926 | 1927 | 1930 | 1931 | 1932 | | | |
| Rs | Rs | Rs | Rs | Rs | Rs | Rs | Rs | Rs | Rs | | |
| | | 5,000 | 4,93,900 | 1,25,000 | | 16,43,900 | 6,60,800 | 2,49,800 | 53,000 | 83,50,600 | |
| | | | | | | | | 1,600 | | 1,600 | President, Calcutta Improvement Tribunal |
| | | | | | ... | | | 18,200 | | 18,200 | Ditto |
| | | | | | | | | 8,100 | | 8,100 | Ditto |
| ... | | | | | 5,900 | | | | | 5,900 | Ditto |
| | | ... | | | | | | 58,200 | | 58,200 | Ditto |
| ... | | | | | | | | 1,200 | | 1,200 | Ditto |
| | | | | | | | | 800 | | 800 | Ditto |
| | | | | | | | | 5,600 | | 5,600 | Ditto |
| | | | | | | | | 11,600 | | 11,600 | Ditto |
| | | | | | | | | 1,600 | | 1,600 | Ditto |
| | | | | | | | | 3,700 | | 3,700 | Ditto |
| | | | | | | | | 9,200 | | 9,200 | Ditto |
| | | | | | | | | | | 100 | Ditto |
| | | | | | | 19,100 | | | | 19,100 | Ditto |
| | | | | | | | | | | 1,200 | Chief Presidency Magistrate |
| | | | | | | | | | | 1,200 | Ditto |
| | | | | | | | | | | 700 | Ditto |
| | | | | | | | | | | 1,000 | Ditto |
| | | | 500 | | | | | | | 500 | Ditto |
| | | | | | | | | | | 900 | Ditto |
| | | | | | | | | | | 500 | Ditto |
| | | | | | | | | | | 1,000 | Ditto |
| | | | | | | | | | | 500 | Ditto |
| | | | | | | 500 | | | | 500 | Ditto |
| ... | | | | | | | | | | 800 | Inspector-General of Prisons, Bengal |
| | | | | | | | | | | 2,000 | Ditto |
| | | | | | | | | | | 1,000 | Ditto |
| | | | | | | | | | | 500 | Ditto |
| | | | | | | | | | | 1,000 | Ditto |
| | | | | | | | | | | 2,000 | Ditto |
| ... | | | | | | | | | | 2,000 | Ditto |
| ... | | | | ... | | | | ... | | 300 | Ditto |
| ... | | 5,000 | 4,94,400 | 1,25,000 | 5,900 | 16,63,500 | 6,60,800 | 3,69,400 | 53,000 | 85,12,900 | |

| Ledger Folio No | Name of Person or Fund on whose behalf held | 3½ PER CENT | | | | 3 per cent of 1896 97 | 4 PER CENT | | 5 PER CENT | |
|---|---|---|---|---|---|---|---|---|---|---|
| | | 1842-43 | 1854-55 | 1865 | 1900 01. | | 1915 16 | 1916 17 | 1929 47 | 1945-55 |
| | | Rs | Rs | Rs | Rs | Rs | Rs | Rs | Rs | Rs |
| | Brought forward . | 9,100 | 54,900 | 45,87,100 | 50,900 | 19,900 | | 12,000 | 17,600 | 3,74,400 |
| 2831 | Dinabandhu Pal, Jailor | | | 1,000 | | | | | | |
| 2832 | Dinobandhu Ghose, do | | 800 | | | 200 | | | | |
| 2833 | Haraprasad Mitra, do | | | 700 | 300 | | | | | |
| 2834 | Jagatbandhu Mostra, do . | | | 1,000 | | | | | | |
| 2835 | Joges Chandra Purkaistha, Jailor . | | | 1,000 | | | | | | |
| 2836 | Jotirmoy Bose, Jailor | | | 1 000 | | | | . | | |
| 2837 | Kali Mohan Ganguli, do | | | 1,000 | | | | . | | |
| 2838 | Kalipada Sinha, do . | | . | 1,000 | . | | | . | | |
| 2839 | Kedar Nath Ghose, do | | 500 | 500 | | | | | . | . |
| 2840 | Narendra Krishna Dutt, do | | ... | 1,000 | | . | | | | |
| 2841 | Priya Nath Das Gupta, do | | 500 | 700 | . | | . | . | | |
| 2843 | Sasanka Sekhar Chatterji, Jailor . | | | 500 | | | | | | |
| 2844 | Satis Chandra Ghose, Jailor | | | 700 | | | | | 300 | |
| 2846 | Surendra Nath Gupta, do | | | 400 | . | | | | | |
| 2847 | Suresh Chandra Sen, do | | | 1,000 | | | | | | |
| 2848 | Upendra Lal De, Deputy Jailor | | | 1,000 | | | . | | | |
| 2849 | Upendra Nath Mukherji, Jailor | | | 1,100 | 900 | | | . | | |
| 2850 | Abul Bazi Mohomad Hamid, Assistant Jailor .. | | | 300 | | | | | | |
| 2852 | Amal Chandra Roy, Assistant Jailor . | | | 300 | | | | | | |
| 2853 | Baul Chandra Mallick, Assistant Jailor | | | 300 | | | | | | |
| 2854 | Birendra Kumar Das Gupta, Assistant Jailor | | | 300 | | | | | | |
| 2855 | Bireswar Chakravarty, Assistant Jailor — .. . | | | 300 | | | | . | | |
| 2856 | Benoybhushan Bhattacharji, Assistant Jailor . | | | 300 | . | | | ... | | |
| 2857 | Dasurathi Roy Chaudhuri, Jailor . . . | | | 300 | . | . | | . | ... | . |
| 2858 | Dhirendra Nath Das Gupta, Deputy Jailor . . | | . | 500 | . | | | . | | |
| 2859 | Dugendra Kumar Ghose, Assistant Jailor .. . . | | | 300 | | | . | | | ... |
| 2860 | Harendra Chandra Sen Gupta, Assistant Jailor . | | 300 | | | | | | .. | .. |
| 2861 | Jatindra Nath Advarji, Assistant Jailor .. | . | | 300 | .. | | | | | .. |
| 2862 | Jitendra Mohan Bose, Assistant Jailor . . | ... | | 300 | | | | | | |
| 2863 | Jitendra Nath Banerji, Assistant Jailor .. ... | | . | 300 | . | | . | | | ... |
| 2864 | Jogendra Chandra Bose, Jailor | | ... | 500 | | . | | ... | .. | ... |
| | Carried over ... | 9,100 | 57,000 | 46,04,900 | 52,100 | 20,100 | .. | 12,000 | 17,900 | 3,74,400 |

| 5½ per cent | | | | 6 per cent | | | | | Debentures and Railway shares | Total | Name of officer to whom interest is sent |
|---|---|---|---|---|---|---|---|---|---|---|---|
| 1922 | 1923. | 1925 | 1928 | 1926 | 1927 | 1930 | 1931 | 1932 | | | |
| Rs | Rs | Rs | Rs | Rs | Rs | Rs | Rs | Rs | Rs | Rs | |
| | | 5,000 | 1,94,400 | 1,25,000 | 5,900 | 16,63,500 | 6,60,800 | 4,69,100 | 63,000 | 85,12,900 | |
| | | | .. | | | | | | | 1,000 | Inspector-General of Prisons, Bengal |
| | | | | | | | | | | 1,000 | Ditto |
| | | | | | . | | | | | 1,000 | Ditto |
| | | | | | | | | | | 1,000 | Ditto |
| | | | | | | | | | | 1,000 | Ditto |
| .. | | | | | | | | | | 1,000 | Ditto |
| . | .. | | ... | | | . | | . | | 1,000 | Ditto |
| | | | | | | | | | | 1,000 | Ditto |
| | | . | | | | | | | | 1,000 | Ditto |
| | | | | | | | | | | 1,000 | Ditto |
| . | . | | | | | | | | | 1,200 | Ditto |
| | | | | | | | | | | 500 | Ditto |
| | | | | | | | | | | 1,000 | Ditto |
| | | | | | | | | | | 100 | Ditto |
| | | | | | | | | | | 1,000 | Ditto |
| | | | | | . | | | | | 1,000 | Ditto |
| | | | | | | | | | | 2,000 | Ditto |
| . | | | | | | | | | | 300 | Ditto |
| | | | | | | | | | | 500 | Ditto |
| .. | | | | | | | | | | 300 | Ditto |
| | | | | | | | | | | 500 | Ditto |
| | | | | | | | | | | 300 | Ditto |
| | | | | | | . | | | | 300 | Ditto |
| | | | | | | | . | | | 300 | Ditto |
| . | | . | | | | | | | | 500 | Ditto |
| . | | . | | | | | | | . | 300 | Ditto |
| | | . | | . | | | .. | | | 300 | Ditto |
| . | | | | | | | | | | 200 | Ditto |
| ... | . | | | | .. | . | .. | . | | 300 | Ditto |
| . | . | | .. | | . | | | .. | | 300 | Ditto |
| .. | .. | .. | | | | .. | .. | .. | . | 560 | Ditto |
| . | .. | 5,000 | 4,94,400 | 1,25,000 | 5,900 | 16,63,500 | 6,60,800 | 4,69,100 | 63,000 | 85,34,500 | |

| Ledger Folio No | Name of Person or Fund on whose behalf held | 3½ PER CENT | | | | 3 per cent of 1896 97 | 4 PER CENT. | | 5 PER CENT | |
|---|---|---|---|---|---|---|---|---|---|---|
| | | 1842-43 | 1854 55 | 1865. | 1900-01 | | 1915 16 | 1916-17. | 1929 47 | 1945-55 |
| | | Rs | Rs | Rs | Rs | Rs. | Rs | Rs | Rs | Rs |
| | Brought forward | 9,100 | 57,000 | 46,04,900 | 52,100 | 20,100 | | 12,000 | 17,900 | 3,74,400 |
| 2865 | Kazi Mohamed Abu Syed, Assistant Jailor .. | | | 300 | | | | | | . |
| 2866 | Mahamad Abdul Gafur, No I, Deputy Jailor | | | 300 | | . | | | | |
| 2867 | Mahamad Abdul Gafur, No II, Assistant Jailor .. | | | 300 | | . | | | | |
| 2868 | Manmotha Nath Mukherji, Jailor .. . | | | 1,000 | | | | | | |
| 2869 | M Imamuddin, Assistant Jailor | | | 300 | | | | | | |
| 2870 | M Serazul Huq, Assistant Jailor .. | | | 300 | | | . | | . | |
| 2871 | Nanj Lal Mukherji, Manager, Jail Depôt ... . | | | 1,500 | | | | | | |
| 2872 | Narendra Kumar Sarkar, Assistant Jailor . | | | 300 | | | | | .. | |
| 2873 | Narendra Nath Mullick, Assistant Jailor .. | | | 300 | | | | .. | | |
| 2874 | Nilmoni Chatterji, Assistant Jailor . | | . | 300 | . | | | | . | |
| 2875 | Rajibuddin, Assistant Jailor | | | 300 | | | | | | . |
| 2876 | Ramani Kanta Mitra, Assistant Jailor . . | . | | 300 | | | | | | |
| 2877 | Satis Chandra Mozumdar, Assistant Jailor . | | | 300 | | | | | | . |
| 2878 | Sasadhar Das Gupta, Assistant Jailor .. | | | 300 | . | | | | | . |
| 2879 | Sir Walter Buchanan Prize Fund . . . | | | 1,500 | | | | | | |
| 2880 | Sudhir Chandra Chandhuri, Assistant Jailor . | | . | 300 | | | | ... | . | |
| 2881 | Surendra Kumar Sarkar, Assistant Jailor . | | | 300 | .. | | | | | . |
| 2882 | Surendra Mohan Ghosh, Assistant Jailor .. . . | | . | 300 | | | | | | . |
| 2883 | Sisil Kumar Chatterji, Assistant Jailor ... .. ... | | | 300 | . | | | | | |
| 2884 | Surendra Nath Mukherji, Assistant Jailor . | . | 400 | .. | | | | .. | . | |
| 2885 | Md Zahural Huq, Assistant Jailor ... .. | | | 300 | . | | . | . | | |
| 2886 | Syed Tazammal Hossain, Assistant Jailor . .. | | | 300 | ... | | | | | . |
| 2887 | Mr W Ryan, Jailor . | . | | 1,200 | ... | . | | ... | | .. |
| 2888 | Sourendra Nath Guha, Jailor . | | . | | | 200 | | . | ... | .. |
| 2889 | Nalini Mohan Ganguli, Assistant Jailor .. | | . | 300 | .. | | | | ... | . |
| 2891 | Bhupati Mohan Sen, Assistant Jailor .. | | | 200 | | . | | . | ... | ... |
| 2892 | A M M Ibrahim, Assistant Jailor .. . | . | | 300 | .. | | | | .. | . |
| 2894 | Surendra Mohan Guha, Assistant Jailor .. | . | 300 | . | .. | | . | | | .. |
| 2858 | Messrs Lyall, Marshall & Co | | | 500 | | .. | . | .. | . | ... |
| 2899 | Maharajadhiraj Bahadur of Burdwan Lecture Fund | .. | . | .. | ... | | .. | .. | . | 10,000 |
| | Carried over ... | 9,100 | 57,700 | 46,16,600 | 52,100 | 20,300 | .. | 12,000 | 17,900 | 3,84,400 |

| 5½ PER CENT | | | | 6 PER CENT | | | | | Debentures and Railway shares | Total | Name of officer to whom interest is sent |
|---|---|---|---|---|---|---|---|---|---|---|---|
| 1922. | 1923. | 1925 | 1928 | 1926 | 1927 | 1930 | 1931 | 1932 | | | |
| Rs | Rs. | Rs | Rs | Rs | Rs | Rs | Rs | Rs | Rs | Rs. | |
| ... | ... | 5,000 | 4,94,400 | 1,25,000 | 5,900 | 16,63,500 | 6,60,800 | 3,69,400 | 63,000 | 85,34,500 | |
| . | .. | | . | | | . | | .. | ... | 300 | Inspector-General of Prisons, Bengal |
| | . | . | . | | | 200 | ... | .. | | 500 | Ditto |
| .. | ... | .. | .. | | .. | | | | | 300 | Ditto |
| ... | .. | . | .. | . | ... | | | | .. | 1,000 | Ditto |
| . | | | | | | | | | | 300 | Ditto |
| | | | | | | | | | | 300 | Ditto |
| | | . | | | | . | | | | 1,500 | Ditto |
| . | | | | | | | | . | | 300 | Ditto |
| | | | | | | | | | | 300 | Ditto |
| | | | | | | | . | | — | 300 | Ditto |
| | | | | | | | | | | 300 | Ditto |
| | | | | | . | | | | | 300 | Ditto |
| | | | | | | | | .. | | 300 | Ditto |
| | | . | | | . | | | | .. | 300 | Ditto |
| . | | . | . | | | | | | | 1,700 | Ditto |
| . | | | | . | | | | | | 300 | Ditto |
| | | | | | | | | | | 300 | Ditto |
| | | | | | | . | | . | | 300 | Ditto |
| | | .. | | | | | | | | 300 | Ditto |
| | | | | | | . | | | | 400 | Ditto |
| | .. | | | . | | | .. | | | 300 | Ditto |
| .. | .. | | | | | | . | | . | 300 | Ditto |
| .. | | . | . | | | | | | . | 1,200 | Ditto |
| . | .. | . | . | | | . | . | | | 200 | Ditto |
| . | | | | | | . | | . | . | 300 | Ditto |
| .. | ... | .. | | .. | .. | . | ... | | | 200 | Ditto |
| . | | . | . | | | . | .. | . | | 300 | Ditto. |
| ... | . | | ... | | | . | | | | 300 | Ditto |
| . | ... | | .. | .. | | . | | | .. | 500 | Surgeon General with the Government of Bengal |
| ... | ... | .. | ... | . | ... | . | ... | ... | .. | 10,000 | Ditto |
| ... | ... | 5,000 | 4,94,400 | 1,25,000 | 5,900 | 16,63,700 | 6,60,800 | 3,69,400 | 63,000 | 85,57,300 | |

| Ledger Folio No | Name of Person or Fund on whose behalf held | 3½ PER CENT | | | | 3 per cent of 1896-97 | 4 PER CENT | | 5 PER CENT | |
|---|---|---|---|---|---|---|---|---|---|---|
| | | 1842-43 | 1854-55 | 1865 | 1900-01 | | 1915-16 | 1916-17 | 1929-47 | 1945-55 |
| | | Rs | Rs | Rs | Rs | Rs. | Rs | Rs | Rs | Rs |
| | Brought forward .. | 9,100 | 37,700 | 46,16,600 | 52,100 | 20,300 | . | 12,000 | 17,900 | 3,81,400 |
| 2902 | Protector of Emigrants on behalf of Mussamat Ankuar .. | . | . | .. | 2,000 | | | | ... | .. |
| 2903 | Munshi Abdul Ghani, Contractor .. ... ... .. | ... | .. | 1,000 | . | .. | | . | .. | |
| 2904 | Annada Prasad Kumar, Collecting Sarkar . .. . | ... | .. | 100 | . | | . | . | | ... |
| 2906 | Sheikh Mozher Hossain, Contractor . .. .. .. | ... | ... | 1,000 | | | . | | ... | . |
| 2907 | Sudhir Chandra Ghosh, Accountant . . | . | | . | | . | . | | .. | .. |
| 2909 | Sankar Sahai Sarkar, Cashier ... | . | | 500 | | | . | | | .. |
| 2912 | Hamendra Kumar Mukerji, Nazir and Treasurer | . | | | | | | . | .. | 500 |
| 2915 | Debendra Mohan Datta, Excise-Sub-Inspector . | | 300 | .. | | | | | | |
| 2916 | Nilmoney Banerjee, Excise Sub-Inspector .. .. . | . | .. | . | | | | . | .. | . |
| 2917 | Manindra Chandra Baral, Excise Sub-Inspector, Nadia . | ... | | . | . | | | | | |
| 2918 | Bhima Charan Banerjee, Excise Sub-Inspector | ... | . | ... | 300 | . | | .. | | |
| 2919 | Janaki Nath Chakravarti, Excise Sub-Inspector | . | .. | | .. | | | | . | . |
| 2920 | Anupchand De, Excise Sub Inspector, Nadia ... . | | | .. | | . | . | | | |
| 2921 | M Hafizuddin Ahmed, Excise Sub-Inspector, Burdwan .. | | .. | . | .. | . | . | | . | |
| 2922 | Rajendra Nath Bose, Excise Sub-Inspector, Nadia .. .. | . | ... | .. | . | . | .. | | . | .. |
| 2923 | Probhat Chandra Sen Gupta, Excise Sub-Inspector . | | .. | | | ... | | .. | . | . |
| 2924 | Satish Chandra Moitra, Excise Sub Inspector .. . .. | . | .. | 300 | . | . | | . | ... | . |
| 2925 | Hari Mohan Datta, Excise Sub Inspector ... ... .. | . | . | | | ... | | | | .. |
| | Kiran Chandra Guha, Excise Sub-Inspector . .. . | | .. | .. | | .. | | | | . |
| 2926 | Jyoti Prokas Sen, Excise Sub-Inspector .. ... ... | .. | . | 300 | | . | . | .. | | ... |
| 2927 | Messrs Haji Ismail Sait & Sons, Contractors, Russa Distillery | ... | .. | 1,000 | | ... | ... | | ... | ... |
| 2928 | Gurudas Chatterji, Sub-Inspector of Excise, Calcutta Warehouse .. . .. ... | ... | .. | 300 | . | .. | .. | . | . | ... |
| 2929 | Messrs Carew & Co . | | | 3,000 | | . | ... | | | . |
| 2930 | Bhupendra Narain Deb, Sub-Inspector . ... ... .. | .. | . | | | ... | | | | ... |
| | Satyaranjan Gupta, Sub-Inspector .. .. | | | . | . | .. | .. | . | . | |
| 2931 | Lalbehari Sen, Sub-Inspector | .. | . | | . | . | .. | | | ... |
| | Khitish Chandra Sen, Sub-Inspector .. ... .. | .. | . | . | | | | | . | . |
| 2935 | Kanai Lall Banerji, Cashier .. | . | . | 1,000 | | . | ... | | .. | .. |
| 2938 | Jagadis Chandra Mukerji, Cashier ... . ... ... | .. | ... | 1,000 | .. | | .. | ... | ... | .. |
| 2942 | Chandra Bhushan Mukerjee, Cashier . ... ... ... | .. | ... | 1,000 | ... | ... | ... | ... | ... | ... |
| | Carried over ... | 9,100 | 58,000 | 46,27,100 | 54,400 | 20,300 | ... | 12,000 | 17,900 | 3,84,900 |

| 5½ PER CENT | | | | 6 PER CENT | | | | | Debentures and Railway shares | Total | Name of officer to whom interest is sent |
|---|---|---|---|---|---|---|---|---|---|---|---|
| 1922 | 1923 | 1925 | 1928 | 1926 | 1927 | 1930 | 1931 | 1932 | | | |
| Rs | Rs | Rs. | Rs | Rs | Rs | Rs | Rs | Rs | Rs | Rs | |
| | .. | 5,000 | 4,94,100 | 1,25,000 | 5,900 | 16,58,700 | 6,50,800 | 3,69,400 | 63,000 | 85,57,300 | |
| .. | | | | | | | . | .. | . | 2,000 | Protector of Emigrants |
| . | | | | | . | | . | ... | . | 1,000 | Ditto |
| | | . | .. | | . | | . | | . | 100 | Ditto |
| | | | . | .. | | | | | | 1,000 | Ditto |
| . | | | | | | 1,000 | | | | 1,000 | Ditto |
| .. | . | ... | | | . | . | | | .. | 500 | Press and Forms Manager, Bengal |
| | | | | | | | | | | 500 | Controller of Rents |
| | | | | | | | | | | 500 | Commissioner of Excise and Salt, Bengal |
| | | | 300 | | | | | | | 300 | Ditto |
| | | | 300 | | | | | | | 300 | Ditto |
| ... | | | | . | | . | | . | | 300 | Ditto |
| ... | . | | 300 | | | | | | | 300 | Ditto |
| | | | 300 | | | | | | .. | 300 | Ditto |
| | | | 300 | | | | | | | 300 | Ditto |
| | | | 250 | . | | | | | | 250 | Ditto |
| | | | 300 | | | | . | | | 300 | Ditto |
| | | | | | | | . | | | 300 | Ditto |
| | | | 300 | | | | | | | 300 | Ditto |
| | | | | | . | 300 | | | | 300 | Ditto |
| | | . | . | | | | . | | . | 300 | Ditto |
| | | | | | | | | | | 1,000 | Ditto |
| . | | .. | | | . | | | . | . | 300 | Ditto |
| | | . | . | | | . | | .. | .. | 3,000 | Ditto. |
| . | | | .. | . | 200 | | .. | | | 200 | Ditto |
| . | .. | .. | | | | . | 300 | | | 300 | Ditto |
| | | | | | | 300 | . | . | | 300 | Ditto |
| . | | | . | | . | 300 | . | | | 300 | Ditto |
| . | ... | .. | | | . | 500 | . | . | | 1,500 | Executive Engineer, 1st Calcutta Division |
| ... | ... | .. | ... | . | | | .. | . | .. | 1,000 | Executive Engineer, 2nd Calcutta Division |
| | ... | ... | . | . | ... | ... | .. | .. | . | 1,000 | Executive Engineer, 3rd Calcutta Division |
| ... | ... | 5,000 | 4,96,750 | 1,25,000 | 6,100 | 16,66,100 | 6,61,100 | 3,69,400 | 63,000 | 85,76,150 | |

| Ledger Folio No | Name of Person or Fund on whose behalf held | 3½ PER CENT | | | | 3 per cent of 1896-97 | 4 PER CENT | | 5 PER CENT | |
|---|---|---|---|---|---|---|---|---|---|---|
| | | 1842-43 | 1854 55 | 1865 | 1900-01 | | 1915-16 | 1916-17 | 1929-47 | 1945-55. |
| | | Rs | Rs | Rs | Rs | Rs. | Rs | Rs | Rs | Rs |
| | Brought forward .. | 9,100 | 58,000 | 46,27,100 | 54,400 | 20,300 | ... | 12,000 | 17,900 | 3,84,900 |
| 2942 | Ajay Nath Mitter and Rajendra Nath Bose, Contractors . | | | | .. | . | . | ... | .. | ... |
| 2943 | A K Aditya, Contractor | . | . | .. | | | .. | ... | . | 9,700 |
| 2944 | Howrah Cemetery Fund | | | 1,600 | | ... | | ... | ... | . |
| 2950 | Hira Lal Mookerjee, Store-keeper | | . | 2,000 | .. | | | | .. | |
| 2951 | Suresh Chandra Bose, Store keeper .. ... | | | ... | | | . | . | 100 | . |
| 2954 | Banshidhar Agarwalla, Store keeper . | | | 2,000 | | | | | . | . |
| 2959 | Bhuban Mohan Ghose, Store-keeper ... .. .. | | | 1,000 | . | | | | . | . |
| 2964 | Panchanan Ghose, Assistant Toll Collector, Magrahat . | | . | | 200 | | | | | |
| 2968 | Jotiprosad Banerjee, Lessee | . | . | | . | | | | . | |
| 2965 | Narendra Nath Mukerji, Assistant Toll Collector, Magrahat | .. | . | | | 200 | | | | |
| 2969 | Rohini Nath Bose, Daroga .. | | . | | 500 | | | | | |
| 2970 | Jogendra Chandra Sen, Toll Clerk . | .. | | . | . | | | . | .. | . |
| 2972 | Durga Das Ghose, Daroga | | .. | 1,000 | | .. | ... | | | ... |
| 2973 | Sarat Chunder Ganguly, Accounts Clerk | | | 500 | . | .. | | | . | |
| 2975 | Ram Durlav Mukerji . . | | .. | | | 100 | .. | . | .. | |
| 2977 | Jatindranath Ghosh, Temporary Toll Collector .. . .. | ... | | | 500 | | | | | ... |
| 2978 | Suresh Chandra Chatterji, Lock Clerk ... .. .. | | .. | .. | 100 | .. | ... | . | | .. |
| 2979 | Kilburn & Co, Contractors | .. | . | 800 | .. | . | .. | | ... | ... |
| 2980 | Macneill & Co, Contractors | . | ... | 600 | .. | .. | ... | . | . | .. |
| 2981 | Akhiluddi, Koyal | .. | .. | . | .. | ... | ... | | .. | .. |
| 2982 | Noosar Ali Ahmed, Kutnavis | . | | | ... | . | .. | ... | .. | .. |
| 2986 | The Hume Pipe & Concrete Construction Company (India), Ltd ... . | | | | | ... | ... | . | .. | ... |
| 2987 | Nemai Chand Seal, Cashier . | | | .. | ... | .. | | .. | ... | 1,000 |
| 2989 | Messrs Worthington, Simpson & Co, Contractors ... .. | . | .. | 2,800 | ... | ... | .. | . | ... | ... |
| 2990 | Ram Prasanna Bhattacharji, Contractor ... ... ... | ... | .. | 500 | 13,900 | ... | .. | . | ... | ... |
| | Carried over . | 9,100 | 58,000 | 46,39,900 | 69,600 | 20,600 | ... | 12,000 | 18,000 | 3,95,600 |

| 5½ PER CENT. | | | | 6 PER CENT | | | | | Debentures and Railway shares | Total | Name of officer to whom interest is sent |
|---|---|---|---|---|---|---|---|---|---|---|---|
| 1922 | 1923 | 1925 | 1926 | 1926 | 1927 | 1930 | 1931 | 1932 | | | |
| Rs | Rs | Rs | Rs | Rs | Rs | Rs | Rs | Rs | Rs | Rs | |
| . | .. | 5,000 | 4,96,750 | 1,25,000 | 6,100 | 16,66,100 | 6,61,100 | 3,69,400 | 63,000 | 85,76,150 | |
| ... | ... | ... | | . | . | 8,600 | .. | .. | | 8,600 | Executive Engineer, 3rd Calcutta Division |
| .. | . | | . | | | . | . | | . | 9,700 | Ditto |
| . | | | | | . | . | .. | | | 1,600 | Ditto |
| . | .. | . | | | | | . | . | | 2,000 | Officer in charge of Stores Subdivision |
| | | | | 1,800 | | .. | | | | 1,900 | Ditto |
| | | | | | | | | | | 2,000 | Ditto |
| | . | | | | | | | | | 1,000 | Executive Engineer, Electrical Division |
| .. | | | | | | | | | | 200 | Executive Engineer, Damodar Division |
| | | | | | | | | | 500 | 500 | Ditto |
| | | | | | | | | | | 200 | Ditto |
| 100 | | | | | | | | | | 600 | Executive Engineer, Canals Division |
| | | | 400 | | | | | | | 400 | Ditto |
| | | | | | | | | | | 1,000 | Ditto |
| | | | . | | | | .. | | | 500 | Ditto |
| | | | | | . | | | | | 100 | Ditto |
| | . | | | | | .. | | | | 500 | Ditto |
| . | | . | | | | | | | | 100 | Ditto. |
| .. | | | | | | | | | ... | 800 | Ditto. |
| | | | | | | . | | | | 600 | Ditto |
| . | | | | 100 | . | | | | . | 100 | Ditto |
| . | . | . | .. | 100 | | . | | | | 100 | Ditto |
| .. | ... | .. | 50,000 | | | | . | ... | | 50,000 | Chief Engineer, Public Health, Bengal |
| .. | .. | ... | .. | | ... | . | . | . | .. | 1,000 | Ditto |
| ... | . | . | ... | ... | .. | ... | ... | .. | .. | 2,800 | Ditto |
| ... | ... | .. | ... | .. | ... | .. | .. | .. | .. | 14,400 | Ditto |
| 100 | ... | 5,000 | 5,47,150 | 1,27,000 | 6,100 | 16,74,700 | 6,61,100 | 3,69,400 | 63,500 | 86,76,850 | |

| Ledger Folio No | Name of Person or Fund on whose behalf held | 3½ PER CENT. | | | | 3 per cent of 1896-97 | 4 PER CENT. | | 5 PER CENT | |
|---|---|---|---|---|---|---|---|---|---|---|
| | | 1842-43 | 1854 55 | 1865 | 1900 01 | | 1915 16 | 1916-17 | 1920-47 | 1945-55 |
| | | Rs | Rs | Rs | Rs | Rs | Rs | Rs | Rs | Rs |
| | Brought forward | 9,100 | 58,000 | 46,79,900 | 69,600 | 20,600 | | 12,000 | 18,000 | 3,95,600 |
| 2991 | S K Chakrabarti .. | | | 3,500 | 2,500 | . | .. | ... | . | . |
| 2992 | K C Ghose & Co . | . | | | 200 | | | .. | . | . |
| 2995 | Sarala Sundari Dassi under section 31(4), Act I of 1894 | . | .. | 15,000 | .. | ... | | | .. | . |
| | PRESIDENCY DIVISION | | | | | | | | | |
| | 24-PARGANAS | | | | | | | | | |
| 3002 | Sibtainabad Imambarah Endowment Fund .. | | | 4,00,000 | | . | | | | .. |
| 3002A | Syed Mahomed Hyder, Manager, Sibtainabad Imambarah | | . | 2,000 | . | | | . | . | . |
| 3003 | Nawab Moortaza Begum Sahiba ... . . | | | 3,000 | | | | | . | . |
| 3091 | Nawab Arah Kanizzora Begum | | | | | | | | | . |
| 3094 | Shams Johan Begum . | | | . | | | . | | | |
| 3095 | Mobarak Bakth Mirza Ilyas Hossain .. . | . | | | | | | | . | |
| 3095 | Mirza Mahamed Mustafa Ali | | | | | | | | | |
| 3096 | Sipahar Arah Begum . | | | . | | | | | | |
| 3096 | Anjuman Arah Begum | | | | | | | | | |
| 3097 | Iffat Arah Kanizzora Begum | | | | | | | | | |
| 3097 | Badrul Mulk Sajjad Hossain | | | | .. | | | | | 400 |
| 3098 | Rafat Arah Abeda Begum | | | | | | | | | .. |
| 3099 | Yusuf Husain Khosh Namad Mirza . .. | | | | | | | .. | | |
| 3099 | Kamar Arah Munni Begum | | | | | | | | .. | |
| 3100 | Nasein Arah Begum . | | | .. | | | | . | | . |
| 3100 | Mirza Sultan Ali, Lunatic | | | | . | | | | . | |
| 3005 | Bibbi Kinkar Pathsala | . | | . | | | . | | 900 | |
| 3006 | Investment under rule 11 of the rules promulgated by Government under Act X of 1870 . . | .. | .. | 27,700 | .. | . | . | | | ... |
| 3007 | Kadambini Dassee, on account of compensation for land . | . | ... | 9,000 | | . | . | ... | ... | . |
| 3009 | Chandi Charan Sen, Satish Chandra Sen, Srish Chandra Sen and Mannatha Nath Sen, farmers of fisheries ... | ... | | 1,700 | . | | . | ... | . | . |
| 3010 | Gopal Behari Guha, Khas Tahsildar ... ... | .. | . | 100 | .. | . | ... | . | .. | .. |
| 3011 | S M Rajo Rani Dassi, certificated guardian of Manindra Nath Mundle, Sricharan and Jugal Ch Mundle, Settlement-holders .. .. | . | ... | 3,000 | | . | .. | .. | ... | .. |
| 3012 | Prince Ghulam Muhammad's Dispensary ... ... | ... | ... | ... | . | ... | ... | ... | 8,000 | ... |
| | Carried over ... | 9,100 | 58,000 | 51,05,900 | 72,300 | 20,600 | .. | 12,000 | 21,900 | 3,96,600 |

| 5½ PER CENT. | | | | 6 PER CENT | | | | | Debentures and Railway shares | Total | Name of officer to whom interest is sent |
|---|---|---|---|---|---|---|---|---|---|---|---|
| 1922. | 1923. | 1925 | 1928 | 1926 | 1927 | 1930 | 1931 | 1932 | | | |
| Rs | Rs | Rs | Rs | Rs | Rs. | Rs | Rs. | Rs. | Rs | Rs. | |
| 100 | ... | 5,000 | 5,47,150 | 1,27,000 | 6,100 | 16,74,700 | 6,61,100 | 3,69,400 | 63,500 | 86,76,850 | |
| .. | . | | .. | . | | . | | | .. | 6,000 | Chief Engineer, Public Health, Bengal |
| . | . | .. | | | | . | | . | .. | 200 | Ditto |
| ... | | | . | | | | | | | 15,000 | Land Acquisition Collector, Calcutta |
| . | | | | | | . | | | | 1,00,000 | Collector and Superintendent, Political Pensions |
| . | | | | | | | | | | 2,000 | Ditto |
| . | | .. | | | | .. | | | | 3,000 | Ditto |
| . | | | 400 | | | | | | | 400 | Ditto |
| | | | 1,000 | | | | | | | 1,000 | Ditto |
| | | | 2,100 | | | | | | | 2,100 | Ditto |
| | | | 900 | . | . | | | | | 900 | Ditto |
| | | | 1,100 | | | | | | | 1,100 | Ditto |
| | . | | 1,100 | | | | | | | 1,100 | Ditto |
| | | . | 800 | | | | | | | 800 | Ditto |
| | | | 2,600 | | | 1,300 | | | | 4,300 | Ditto |
| | | | 1,300 | | | 600 | | | | 1,900 | Ditto |
| | 1,100 | | | | | | | | | 1,100 | Ditto |
| | | | . | | | 2,000 | | | | 2,000 | Ditto |
| | | | | | . | 1,200 | | | | 1,200 | Ditto |
| | | . | | | | 1,500 | | | | 1,500 | Ditto |
| | | | | .. | | | | | | 900 | Collector |
| | | | | | | . | | | . | 27,700 | Ditto |
| ... | | | .. | | . | | .. | | | 9,000 | Ditto |
| .. | . | | | | ... | | | . | | 1,700 | Ditto |
| ... | .. | | ... | | .. | . | .. | . | . | 100 | Ditto |
| | ... | . | ... | ... | .. | .. | ... | ... | ... | 3,000 | Ditto |
| ... | ... | ... | ... | ... | ... | ... | .. | ... | 1,37,500 | 1,40,500 | Ditto |
| 100 | 1,100 | 5,000 | 5,58,450 | 1,27,000 | 6,100 | 16,81,800 | 6,61,100 | 3,69,400 | 2,01,000 | 93,05,850 | |

| Ledger Folio No | Name of Person or Fund on whose behalf held | 3½ PER CENT | | | | 3 per cent of 1896-97 | 4 PER CENT | | 5 PER CENT | |
|---|---|---|---|---|---|---|---|---|---|---|
| | | 1842-43 | 1851-55 | 1865 | 1900-01 | | 1915-16 | 1916-17 | 1929 47 | 1945-55. |
| | | Rs | Rs | Rs. | Rs | Rs | Rs | Rs. | Rs | Rs |
| | Brought forward | 9,100 | 58,000 | 51,04,900 | 72,300 | 20,600 | | 12,000 | 21,900 | 3,96,000 |
| | PRESIDENCY DIVISION —*contd* | | | | | | | | | |
| | 24-PARGANAS—*contd* | | | | | | | | | |
| 3013 | Jogendra Nath Datta, Tahsildar, Diamond Harbour sub division .. .. | .. | 700 | 800 | | | | | | |
| 3014 | Narendra Kumar Mitra, Tahsildar, Diamond Harbour subdivision .. .. | | | 500 | | | | | | |
| 3015 | Narendra Nath Ghosh, Tahsildar, Panihati Ward's Estate | | | .. | | 100 | | | | |
| 3016 | Tsiguna Charan Mitra, Head Clerk, Panihati Ward's Estate | | | | | 200 | | | | |
| 3017 | Jamini Kanta Ganguli, Tahsildar ... .. | | | | | 300 | | | | |
| 3018 | Jamini Kanta Ganguli, Naib, Port Canning . .. ... | .. | | 400 | | | | | | |
| 3019 | Managing Agents, Khurda Co, Ltd, for protection of estate from sale . .. | | | 200 | 200 | | | | | |
| 3020 | Jaharlal Sil and Balai Lal Sil for protection of estate from sale .. | | | 400 | | | | | | |
| 3021 | Tookada Mohini Dasi, Izardar .. | | | 1,500 | | | | | | |
| 3023 | Kedar Nath Shaw, Settlement-holder, Canal surplus holdings | | | 100 | | | | | | .. |
| 3024 | Nibaran Chandra Chatterji and Srimati Surabala Devi, guardian mother of minor son Bireswar Chatterji, Settlement-holder .. | | | 200 | | | | | .. | |
| 3025 | Amrita Lal Shaw, Settlement holder .. ... | | | 100 | | | | | | |
| 3026 | Kunja Behari Ray and others, Settlement-holder | .. | | 500 | | | | | | |
| 3027 | Haran Chandra Saha, Settlement-holder .. | | | 1,200 | | | | | ... | ... |
| 3028 | Ashutosh De, Settlement holder | | | 500 | | | | | | .. |
| 3030 | Azizul Huq, Khas Tahsildar, Diamond Harbour | | | 600 | | | | | ... | .. |
| 3031 | Mohesh Chandra, Land reclamation, etc, for protection of estates from sale | | | 3,000 | | | | .. | | .. |
| 3032 | Jnanendra Kumar Chaudhuri, executor to the estate of Upendra Nath Ghose, Settlement-holder | | .. | 500 | | | | | | |
| 3033 | Gopinath Samanta, Settlement-holder ... .. | ... | | 1,200 | .. | | ... | | ... | |
| 3034 | Charu Chandra Roy, Settlement-holder ... .. .. | ... | | ... | 300 | ... | .. | .. | ... | ... |
| 3035 | Kamal Kumar Ghosa, Settlement-holder .. .. | | | 400 | | .. | ... | .. | .. | ... |
| 3037 | Nanilal Mandal, Settlement holder ... ... ... | ... | ... | .. | 500 | ... | | ... | ... | ... |
| | Carried over ... | 9,100 | 58,700 | 51,16,500 | 73,300 | 21,200 | ... | 12,000 | 21,900 | 3,96,000 |

| 3½ per cent. | | | | 6 per cent | | | | | Debentures and Railway shares | Total | Name of officer to whom interest is sent |
|---|---|---|---|---|---|---|---|---|---|---|---|
| 1922. | 1923 | 1925 | 1928 | 1926 | 1927. | 1930 | 1931 | 1932 | | | |
| Rs | Rs | Rs | Rs | Rs | Rs | Rs | Rs | Rs | Rs | | |
| 100 | 1,100 | 5,000 | 5,58,450 | 1,27,000 | 6,100 | 16,81,300 | 6,61,100 | 3,69,400 | 2,01,000 | 93,09,350 | |
| | | | | | | | | | | 1,000 | Collector |
| | | | | | | | | | | 500 | Ditto |
| | | | | | | | | | | 100 | Ditto |
| | | | | | | | | | | 200 | Ditto |
| | | | | | | | | | | 300 | Ditto |
| | | | | | | | | | | 400 | Ditto |
| | | | | | | | | | | 400 | Ditto |
| | | | | | | | | | | 400 | Ditto |
| | | | | | | | | | | 1,500 | Ditto |
| | | | | | | | | | | 100 | Ditto |
| | | | | | | | | | | 200 | Ditto |
| | | | | | | | | | | 100 | Ditto |
| | | | | | | | | | | 500 | Ditto |
| | | | | | | | | | | 1,200 | Ditto |
| | | | | | | | | | | 500 | Ditto |
| | | | | | | | | | | 600 | Ditto |
| | | | | | | | | | | 3,000 | Ditto |
| | | | | | | | | | | 500 | Ditto |
| | | | | | | | | | | 1,200 | Ditto |
| | | | | | | | | | | 300 | Ditto |
| | | | | | | | | | | 400 | Ditto |
| | | | | | | | | | | 500 | Ditto |
| 100 | 1,100 | 5,000 | 5,58,450 | 1,27,000 | 6,100 | 16,81,300 | 6,61,100 | 3,69,400 | 2,01,000 | 93,19,250 | |

| Ledger Folio No. | Name of Person or Fund on whose behalf held | 3½ PER CENT | | | | 3 per cent of 1896-97 | 4 PER CENT | | 5 PER CENT. | |
|---|---|---|---|---|---|---|---|---|---|---|
| | | 1842 43 | 1854-55 | 1865 | 1900-01 | | 1915-16 | 1916-17 | 1929-47 | 1945-55. |
| | | Rs | Rs | Rs | Rs | Rs | Rs | Rs | Rs | Rs |
| | Brought forward | 9,100 | 58,700 | 51,16,500 | 7,33,300 | 21,200 | | 12,000 | 21,900 | 3,96,000 |
| | PRESIDENCY DIVISION —*contd* | | | | | | | | | |
| | 24-PARGANAS—*contd* | | | | | | | | | |
| 3039 | Sital Chandra Shaw, lessee | | | | .. | 1,000 | | | | |
| 3040 | Haran Chandra Mitra, Tahsildar, Banshidharpur | | | 600 | | | | | | |
| 3041 | Nagendra Nath Bose, Tahsildar, Bongbata | | | 500 | | | | | .. | |
| 3042 | Anukul Chandra Mukherji, Nazir, Barrackpore subdivision | | | 500 | | | | | .. | .. |
| 3043 | Narendra Nath Mukherji, Accountant, Barasat | | | 350 | | | | | | |
| 3046 | Amulyadhon Roy, Cashier, Janbazar Ward's Estate | | | 500 | | | | | | |
| 3051 | Chandra Mohan Banerji, Tahsildar, Janbazar Ward's Estate No II | | | | | | | | | |
| 3052 | Gopal Bihari Guha, Tahsildar | | 500 | | | | | .. | | |
| 3053 | Seo Bux Bogla, Trustee, Pinjrapol Estate | | | 500 | | 100 | | | | |
| 3054 | Bama Sundari Devi, Ward of Panihati Estate No III | | | 10,500 | | | | | | |
| 3055 | Panihati Ward's Estate No II | | | 3,000 | | | | | 500 | |
| 3056 | Panihati Ward's Estate No III | | .. | 2,500 | | | | .. | 3,400 | |
| 3057 | Bibuti Bhusan Banerji, Tahsildar, Panihati Ward's Estate | | | 600 | | | | | | |
| 3058 | Sudhir Kumar Mitra, Muharir, Panihati Ward's Estate No III | | | .. | | 100 | | .. | .. | |
| 3062 | Standard Jute Co, for protection of estate from sale | | 200 | 1,000 | 200 | | | | | .. |
| 3063 | Kinnison Jute Mills Company, Limited, for protection of estate from sale | 2,700 | .. | | .. | | .. | | ... | .. |
| 3064 | Surendra Chandra Chatterji, Assistant Nazir | ... | | ... | .. | 100 | .. | | .. | ... |
| 3065 | Badel Biswas, under Panihati Estate | .. | .. | ... | .. | 100 | .. | ... | ... | .. |
| 3066 | Srish Chandra Chandra, Tahsildar, Panihati Ward's Estate | .. | ... | 500 | .. | | ... | ... | .. | ... |
| 3067 | Karunamoy Biswas, Tahsildar, Panihati Ward's Estate | | ... | ... | | 500 | ... | ... | ... | ... |
| 3068 | Prafulla Kumar Mitra, Panihati Ward's Estate | | .. | 100 | | ... | ... | ... | ... | ... |
| 3069 | Tagore Raj Settled Estate | ... | ... | ... | .. | ... | ... | ... | 1,000 | 1,700 |
| | Carried over | 11,800 | 59,400 | 51,97,600 | 73,500 | 23,100 | ... | 12,000 | 16,800 | 3,97,700 |

| 6 PER CENT | | | | 6 PER CENT | | | | | Debentures and Railway shares | Total | Name of officer to whom interest is sent |
|---|---|---|---|---|---|---|---|---|---|---|---|
| 1922 | 1923 | 1925 | 1928 | 1926 | 1927 | 1930 | 1931. | 1932 | | | |
| Rs | Rs | Rs | Rs | Rs | Rs | Rs | Rs | Rs | Rs | Rs | |
| 100 | 1,100 | 5,000 | 5,58,450 | 1,27,000 | 6,100 | 16,81,300 | 6,61,100 | 3,69,400 | 2,01,000 | 93,59,250 | |
| . | | . | ... | | .. | | | . | | 1,000 | Collector |
| | | | . | | | | . | . | | 600 | Ditto |
| | | | | | | | | . | . | 500 | Ditto |
| | | | | | | | . | .. | | 500 | Ditto |
| . | | | | | | . | | . | | 300 | Ditto |
| | . | | | | | | . | | | 500 | Ditto |
| | | | 100 | | | . | . | | . | 100 | Ditto |
| | | | | | | | | | | 500 | Ditto |
| | | | | | | | | | | 600 | Ditto |
| | | | | | | | | | | 10,500 | Ditto |
| | | | 500 | | | | | | | 4,000 | Ditto |
| | | | 200 | | | | | | | 6,100 | Ditto |
| | | | . | | | | | | | 600 | Ditto |
| | . | | | | | . | | | | 100 | Ditto |
| | | | | | | | | | | 1,400 | Ditto |
| .. | | | | | . | . | | | .. | 2,700 | Ditto |
| | | | . | | .. | .. | .. | . | . | 100 | Ditto |
| | | | | | .. | | . | . | .. | 100 | Ditto |
| . | | | | ... | .. | ... | | . | | 500 | Ditto |
| | . | | . | | . | . | . | ... | . | 500 | Ditto |
| | | . | .. | .. | .. | ... | . | . | | 100 | Ditto |
| ... | .. | ... | . | | . | 6,000 | . | .. | .. | 8,700 | Ditto |
| 100 | 1,100 | 5,000 | 5,59,250 | 1,27,000 | 6,100 | 16,87,300 | 6,61,100 | 3,69,400 | 2,01,000 | 93,59,250 | |

| Ledger Folio No | Name of Person or Fund on whose behalf held | 3½ PER CENT. | | | | 3 per cent of 1896-97 | 4 PER CENT | | 5 PER CENT | |
|---|---|---|---|---|---|---|---|---|---|---|
| | | 1842-43 | 1854-55 | 1865 | 1900-01 | | 1915 16 | 1916-17 | 1929-47 | 1945-55 |
| | | Rs | Rs | Rs | Rs | Rs | Rs | Rs | Rs | Rs. |
| | Brought forward | 11,800 | 59,400 | 51,37,600 | 73,500 | 28,100 | .. | 12,000 | 26,800 | 3,97,700 |
| | PRESIDENCY DIVISION—*contd* | | | | | | | | | |
| | 24-PARGANAS—*contd* | | | | | | | | | |
| 3074 | Union Jute Co for protection of estate from sale . . | ... | .. | .. | .. | | | 3,700 | ... | . |
| 3075 | Khagendra Nath Banerji, Manager, Panihati and Janbazar No II Ward's Estate .. | ... | ... | 2,000 | | | .. | | | .. |
| 3077 | Sris Chandra Law, Executor to the estate of Purna Chandra Law and others .. . | .. | . | .. | .. | 100 | . | . | . | .. |
| 3078 | Chiranjib Roy Chaudhuri, Tahsildar, Angarbaria and Paina bad .. .. . . | .. | . | 500 | . | .. | | ... | | |
| 3079 | Chiranjib Roy Chaudhuri, Tahsildar, Behaghata .. ... | .. | ... | 500 | .. | . | .. | . | . | |
| 3080 | Nibaran Chandra Sen, Head Clerk, Diamond Harbour | | | . | 500 | | | | | . |
| 3082 | Baranagore Jute Factory Co, for protection of property from sale ... . | ... | . | 1,000 | 800 | | | | ... | |
| 3083 | Bijoy Busan Ghose, Cashier, Janbazar Ward's Estate, No II ... | ... | .. | .. | | | | .. | | . |
| 3084 | Jnanendra Nath Das, Tahsildar, Janbazar Ward's Estate, No II .. . . . | ... | .. | 900 | | . | | .. | . | |
| 3085 | Janbazar Ward's Estate No II | ... | ... | . | | . | . | . | 5,000 | .. |
| 3087 | Empire Jute Co, Ld, for protection of estate from sale ... | ... | ... | | 800 | | . | .. | .. | |
| 3088 | Kelvin Jute Mills Co, Ld . | 800 | ... | . | | . | . | . | .. | |
| 3089 | Bhujendra Bhusan Das, Treasurer ... ... .. ... | .. | ... | .. | . | .. | . | . | ... | . |
| 3090 | Nalinikanta Gupta, Tahsildar | .. | .. | 800 | | . | | | . | |
| 3091 | Sarat Chandra Ghose, Lessee | ... | ... | .. | .. | . | | | . | . |
| 3107 | Provident Fund deposits of the District Board, 24-Parganas .. | ... | ... | 9,500 | .. | . | | | .. | . |
| 3109 | Prince Ghulam Muhammad's Charity ... ... | ... | ... | 2,80,300 | ... | | | . | 12,700 | . |
| 3110 | Raj Mohan Rai Chaudhuri's Fund for Taki Government High School ... . .. | ... | ... | 7,500 | .. | . | .. | ... | .. | |
| 3112 | Dr Bholanath Basu Prize ... | .. | ... | 500 | . | . | .. | | ... | .. |
| 3114 | Khagendra Kumar Medal Fund | ... | ... | 200 | ... | .. | ... | ... | ... | ... |
| 3116 | Baruipore Victoria Municipal Charitable Dispensary ... | ... | ... | 1,000 | ... | ... | . | ... | ... | ... |
| 3118 | Khetra Nath Chatterji Free Studentship .. .. .. | .. | . | 17,600 | | .. | . | . | .. | .. |
| 3119 | Bipradas Banerji and Sibdas Banerji Medal, ... . | ... | ... | 700 | . | .. | . | | ... | ... |
| 3120 | Bipra Das Banerji Prize ... | ... | ... | 700 | ... | . | .. | .. | ... | ... |
| 3122 | Shris Chandra Rai Scholarship | .. | ... | 600 | ... | ... | ... | .. | ... | |
| 3124 | Gobardanga H. E School Fund | .. | ... | 1,000 | ... | ... | ... | ... | . | ... |
| 3126 | Barasat Dispensary ... ... | ... | ... | 1,000 | ... | ... | ... | .. | ... | ... |
| | Carried over ... | 12,600 | 59,400 | 54,63,900 | 75,100 | 28,200 | ... | 15,700 | 44,500 | 3,97,700 |

| 5½ PER CENT | | | | 6 PER CENT | | | | | Debentures and Railway shares | Total | Name of officer to whom interest is sent |
|---|---|---|---|---|---|---|---|---|---|---|---|
| 1922 | 1923 | 1925. | 1928 | 1926 | 1927 | 1930 | 1931 | 1932 | | | |
| Rs | Rs | Rs | Rs | Rs. | Rs | Rs | Rs | Rs | Rs | | |
| 100 | 1,100 | 5,000 | 5,59,250 | 1,27,000 | 6,100 | 16,87,300 | 6,61,100 | 3,69,400 | 2,01,000 | 93,59,250 | |
| ... | | | | . | | | | | | 3,700 | Collector |
| | | .. | | | . | | | | | 2,000 | Ditto |
| . | | | | | | | . | | | 100 | Ditto |
| | | | | | | . | | | | 500 | Ditto |
| ... | | | . | | . | . | | | | 500 | Ditto |
| | . | | . | ... | | . | | | | 500 | Ditto |
| .. | | . | ... | | | . | | | | 1,400 | Ditto |
| . | . | ... | . | | | 100 | . | | . | 100 | Ditto |
| . | | | | | .. | | .. | | | 900 | Ditto |
| . | | | 85,000 | | 45,000 | 14,000 | .. | .. | . | 1 40,000 | Ditto |
| | | .. | | | | | | | | 800 | Ditto |
| | | ... | . | | . | | | . | | 800 | |
| . | | .. | | 20,000 | . | | | | | 20,000 | Ditto |
| | | . | . | .. | | . | . | | | 800 | Ditto |
| . | .. | . | .. | . | . | 2,700 | | | | 2,700 | Ditto |
| ... | . | . | | . | | . | ... | .. | | 9,500 | Chairman, District Board |
| . | | | . | | | | | | .. | 2,93,000 | Collector and District Judge |
| | | | | | | | | | . | 7,500 | Head Master, Taki School |
| | . | . | | | .. | | | | | 500 | Head Master, Barrackpur Government School |
| .. | | | | | | | . | . | | 200 | Head Master, Barnipur High English School |
| .. | . | . | | | . | .. | . | | | 1,000 | Chairman, Barnipur Municipality |
| | . | .. | 100 | . | . | ... | | | | 17,700 | Head Master, Barasat Government School |
| . | ... | ... | . | . | .. | . | | .. | | 700 | Ditto |
| ... | .. | ... | . | .. | .. | | | | . | 700 | Ditto |
| ... | ... | ... | ... | .. | ... | .. | .. | . | | 600 | Secretary, Anglo Sanskrit School, Harinavi |
| ... | . | ... | | | .. | ... | .. | . | | 1,000 | Secretary, Gobardanga H E School |
| ... | .. | ... | ... | ... | ... | ... | ... | . | ... | 1,000 | Chairman, Barasat Municipality |
| 100 | 1,100 | 5,000 | 6,44,350 | 1,47,000 | 51,100 | 17,04,100 | 6,61,100 | 3,69,400 | 2,01,000 | 98,76,350 | |

| Ledger Folio No | Name of Person or Fund on whose behalf held | 3½ per cent. | | | | 3 per cent of 1896-97 | 4 per cent. | | 5 per cent | |
|---|---|---|---|---|---|---|---|---|---|---|
| | | 1842-43 | 1854-55. | 1865 | 1900-01 | | 1915-16 | 1916-17 | 1929-47 | 1945-55 |
| | | Rs | Rs | Rs | Rs | Rs | Rs | Rs | Rs | Rs. |
| | Brought forward .. | 12,600 | 59,400 | 54,63,900 | 75,100 | 23,200 | ... | 15,700 | 44,500 | 3,97,700 |
| | PRESIDENCY DIVISION —*contd* | | | | | | | | | |
| | 24 PARGANAS—*contd* | | | | | | | | | |
| 3129 | L A case No 161 of 1891 . | .. | . | 1,500 | . | . | | | | .. |
| 3130 | L A case No 169 of 1891 | . | | 1,500 | | | . | | . | ... |
| 3132 | L A case No 21 of 1901 | .. | .. | 300 | .. | | | | | ... |
| 3133 | L A case No 50 of 1902 | ... | | 11,600 | | | ... | | . | |
| 3131 | Sarala Devi, claimant in L A case No 1 of 1898 | | | 7,900 | .. | | | | | . |
| 3134 | L A case Nos 91 of 1902 and 70 of 1904 | | | 2,600 | .. | | . | | ... | |
| 3135 | L A case No 88 of 1902 . | | | 200 | . | ... | | . | .. | ... |
| 3136 | L A case No 205 of 1903 | . | | | .. | 11,300 | | | . | |
| 3137 | L A case No 206 of 1903 | .. | | . | | 25,900 | . | | . | |
| 3138 | L A case No 207 of 1903 | . | . | ... | . | 58,500 | | | | . |
| 3139 | L A case No 5 of 1904 | . | | 200 | .. | .. | . | . | .. | |
| 3140 | L A case No 6 of 1904 . | . | .. | 200 | | | .. | . | . | . |
| 3141 | L A case No 26 of 1904 . | .. | | 8,100 | . | . | | | . | .. |
| 3142 | L A case No 50 of 1904 | | .. | 1,000 | .. | .. | . | . | | .. |
| 3143 | L A case No 85 of 1904 | .. | . | 4,000 | ... | ... | .. | | . | . |
| 3145 | L A case No 96 of 1904 .. | .. | | 1,300 | ... | . | .. | ... | .. | . |
| 3146 | L A case No 100 of 1904 | .. | | 5,400 | .. | .. | . | . | .. | . |
| 3147 | L A case No 104 of 1904 .. | ... | ... | 300 | . | ... | .. | ... | | .. |
| 3148 | L. A case No 262 of 1904 ... | ... | . | 200 | .. | ... | .. | .. | . | .. |
| 3149 | L A case No 70 of 1905 ... | .. | .. | 4,000 | | .. | | . | .. | .. |
| 3150 | L. A case No. 71 of 1905 . | ... | | 900 | ... | ... | ... | . | ... | . |
| 3151 | L A. case No 72 of 1905 .. | .. | .. | 9,800 | ... | ... | . | .. | ... | ... |
| 3152 | L A case No 1 of 1906 ... | .. | .. | 300 | ... | ... | ... | .. | ... | ... |
| 3153 | L A case No 26 of 1906 . | ... | .. | 900 | ... | .. | ... | ... | ... | .. |
| 3154 | L A case No 39 of 1906 . | .. | .. | 55,600 | ... | ... | .. | ... | ... | |
| 3155 | L A case No 51 of 1906 | ... | | 2,100 | ... | .. | ... | ... | .. | |
| 3156 | L A case No 54 of 1906 ... | . | .. | 200 | .. | ... | ... | ... | ... | .. |
| 3157 | L A case No 57 of 1906 . | . | .. | 700 | ... | .. | ... | .. | ... | ... |
| 3158 | L A case No 59 of 1906 .. | | | 700 | .. | ... | .. | ... | .. | . |
| 3159 | L A case No 65 of 1906 ... | ... | | 1,200 | ... | ... | ... | ... | .. | ... |
| 3160 | L A case No 74 of 1906 ... | .. | ... | 2,500 | .. | ... | ... | ... | ... | ... |
| 3161 | L. A case No 59 of 1907 ... | ... | ... | 400 | ... | ... | ... | ... | ... | ... |
| 3163 | L A case No 167 of 1907 ... | ... | . | 6,400 | ... | .. | ... | .. | ... | .. |
| 3164 | L A case No 180 of 1907 . | ... | ... | 500 | ... | | ... | . | . | ... |
| 3165 | L A case No 27 of 1908 ... | . | ... | 800 | ... | ... | ... | .. | ... | ... |
| 3166 | L. A case No 106 of 1908 . | .. | ... | 400 | ... | ... | .. | .. | ... | ... |
| 3167 | L A. case No 127 of 1908 .. | ... | ... | 1,800 | ... | ... | ... | ... | ... | ... |
| 3168 | L A case No 168 of 1908 ... | ... | ... | 6,400 | ... | ... | ... | ... | ... | ... |
| | Carried over ... | 12,600 | 59,400 | 56,05,800 | 75,100 | 1,18,900 | ... | 15,700 | 44,500 | 3,97,700 |

| 5½ PER CENT | | | | 6 PER CENT | | | | | Debentures and Railway shares | Total | Name of officer to whom interest is sent |
|---|---|---|---|---|---|---|---|---|---|---|---|
| 1922 | 1923 | 1925 | 1928 | 1926 | 1927 | 1930 | 1931 | 1932 | | | |
| Rs. | Rs. | Rs | Rs | Rs | Rs | Rs | Rs | Rs | Rs | [illegible] | |
| 100 | 1,100 | 5,000 | 6,14,350 | 1,17,000 | 51,100 | 17,04,100 | 6,61,100 | 3,69,400 | 2,01,000 | 98,76,350 | |
| | | | | | | | | | | 1,500 | Special Land Acquisition Judge |
| | | | .. | . | | | | . | . | 1,000 | Ditto |
| | | . | | | | | | | | 300 | Ditto |
| | . | . | | | | | | | | 11,600 | Ditto |
| | | | | | | | | | | 7,900 | Ditto |
| | | | | | | | | | | 2,600 | Ditto |
| | | | | | | | | | | 200 | Ditto |
| . | | | | | | | | . . | | 11,300 | Ditto |
| | | | . | | | | | | | 25,900 | Ditto |
| .. | | . | | | | | | | | 58,500 | Ditto |
| .. | .. | | | | | . | . | | | 200 | Ditto |
| | . | | . | | | ... | . | | | 200 | Ditto |
| . | | . | . | . | . | | .. | | .. | 8,100 | Ditto |
| | .. | | | | .. | . | .. | | . | 1,000 | Ditto |
| .. | ... | ... | .. | . . | . | | . | | ... | 1,000 | Ditto |
| ... | . | | . | . | | | . | . | .. | 1,600 | Ditto |
| . | | | .. | | | . | .. | .. | .. | 5,400 | Ditto |
| | .. | . | | . | | ... | ... | .. | | 800 | Ditto |
| . | . | | | | ... | | . | | | 200 | Ditto |
| | . | . | . | . | .. | . | ... | . | . | 4,000 | Ditto |
| . | .. | . | . | .. | . | .. | .. | . | ... | 900 | Ditto |
| | . | | . | . | | .. | | | | 9,800 | Ditto |
| . | .. | ... | | .. | .. | ... | . | . | . | 800 | Ditto |
| .. | . | ... | | . | .. | ... | ... | ... | ... | 900 | Ditto |
| | . . | . | . | | . | . . | .. | | . | 55,600 | Ditto |
| | . | | . | | | .. | .. | .. | ... | 2,100 | Ditto |
| ... | . | ... | ... | . | . | .. | ... | ... | ... | 200 | Ditto |
| | | .. | | .. | | .. | ... | .. | | 700 | Ditto |
| | .. | . . | . | | | . . | ... | . | . | 700 | Ditto |
| .. | . | ... | .. | .. | . | . | ... | ... | . | 1,200 | Ditto |
| .. | .. | . | ... | .. | . . | ... | .. | . | . | 2,500 | Ditto |
| | ... | .. | . | | .. | ... | ... | .. | | 400 | Ditto |
| ... | ... | ... | ... | | . . | .. | .. | | . . | 6,400 | Ditto |
| .. | | ... | . | . | . | ... | ... | . | .. | 500 | Ditto |
| .. | .. | ... | .. | ... | ... | ... | ... | .. | ... | 800 | Ditto |
| .. | ... | ... | ... | ... | .. | ... | ... | . . | ... | 400 | Ditto |
| ... | ... | | ... | ... | ... | .. | ... | ... | ... | 1,300 | Ditto |
| ... | ... | ... | ... | ... | ... | ... | ... | ... | ... | 6,400 | Ditto |
| 100 | 1,100 | 5,000 | 6,44,350 | 1,47,000 | 51,100 | 17,04,100 | 6,61,100 | 3,69,400 | 2,01,000 | 1,01,13,450 | |

| Ledger Folio No | Name of Person or Fund on whose behalf held | 3½ PER CENT | | | | 3 per cent of 1896-97 | 4 PER CENT | | 5 PER CENT | |
|---|---|---|---|---|---|---|---|---|---|---|
| | | 1842-43 | 1854-55 | 1865 | 1900 01 | | 1915-16 | 1916 17 | 1929-47 | 1945-55 |
| | | Rs | Rs | Rs | Rs | Rs | Rs | Rs | Rs | Rs. |
| | Brought forward . | 12,600 | 59,400 | 56,05,500 | 75,100 | 1,18,900 | . | 15,700 | 44,500 | 3,97,700 |
| | PRESIDENCY DIVISION —*contd* | | | | | | | | | |
| | 24 PARGANAS—*contd* | | | | | | | | | |
| 3169 | L A case No 179 of 1908 | | | 4,400 | | .. | . | | | |
| 3170 | L A case No 204 of 1908 | | | 1,000 | | | | | | . |
| 3171 | L A case No 228 of 1908 | . | | 1,500 | .. | | .. | | | . |
| 3172 | L A case No 218 of 1908 | | | 500 | .. | | | | ... | .. |
| 3173 | L A case No 253 of 1908 . | | | 27,800 | . | | | | ... | . |
| 3174 | L A case No 4 of 1909 | .. | | 300 | | | | | . | .. |
| 3175 | L A case No 11 of 1909 | . | . | 100 | . | | | .. | | .. |
| 3176 | L A case No 64 of 1909 | | ... | 1,800 | .. | | | | . | . |
| 3177 | L A case No 98 of 1909 | | .. | 700 | | ... | .. | . | | |
| 3178 | L A case No 107 of 1909 . | | ... | 400 | . | | | | | |
| 3179 | L A case No 130 of 1909 | | | 600 | | | . | . | | . |
| 3181 | L A case No 297 of 1909 . | | . | 2,500 | | | | | | . |
| 3182 | L A case No 365 of 1909 . | | . | 900 | | | . | | | |
| 3183 | L. A case No 481 of 1909 | . | . | 300 | | | . | . | | . |
| 3184 | L A case No 485 of 1909 | ... | . | 100 | | . | | | | .. |
| 3185 | L A case No 490 of 1909 .. | | | 1,500 | | | | | | . |
| 3186 | L A case No 574 of 1909 | | .. | 1,100 | .. | | | | . | |
| 3187 | L A case No 587 of 1909 . | | . | 100 | | | | .. | | . |
| 3188 | L A case No 614 of 1909 | . | .. | 100 | . | | | | | |
| 3189 | L A case No 624 of 1909 | .. | | 300 | | | . | | | . |
| 3190 | L A case No 652 of 1909 .. | | | 15,000 | .. | . | | . | .. | |
| 3191 | L A case No 719 of 1909 . | . | . | 100 | . | .. | | | | . |
| 3192 | L A case No 721 of 1909 . | . | . | 1,000 | . | | .. | . | | ... |
| 3193 | L A case No 772 of 1909 . | .. | | 100 | . | | . | | . | .. |
| 3194 | L A case No 776 of 1909 | . | . | 2,100 | | . | | | | .. |
| 3195 | L A case No 805 of 1909 | | .. | 700 | .. | | | | . | .. |
| 3196 | L A case No 885 of 1909 .. | | | 1,600 | | . | . | .. | .. | |
| 3197 | L A case No 977 of 1909 .. | | . | 7,300 | . | | . | . | | |
| 3198 | L A case No 1085 of 1909 | | . | 21,800 | | | . | | . | .. |
| 3199 | L A case No 1098 of 1909 | | | 1,100 | . | . | .. | .. | . | .. |
| 3200 | L A case No 1119 of 1909 | | | 800 | | | . | .. | .. | . |
| 3201 | L A case No 1121 of 1909 | | | 1,000 | .. | . | | | ... | .. |
| 3202 | L A case No 36 of 1910 | | | 5,000 | . | .. | ... | | | . |
| 3203 | L A case No 39 of 1910 | | | 51,900 | .. | . | . | . | .. | ... |
| 3205 | L A case No 73 of 1910 .. | | | 1,800 | | . | . | | . | ... |
| 3206 | L A case No 86 of 1910 .. | . | | 3,800 | . | | . | | ... | ... |
| 3207 | L A case No 94 of 1910 .. | . | | 200 | .. | ... | . | . | .. | ... |
| | Carried over ... | 12,600 | 59,400 | 57,65,200 | 75,100 | 1,18,900 | ... | 15,700 | 44,500 | 3,97,700 |

| 5½ PER CENT | | | | 6 PER CENT | | | | | Debentures and Railway shares | Total. | Name of officer to whom interest is sent |
|---|---|---|---|---|---|---|---|---|---|---|---|
| 1922 | 1923 | 1925 | 1926 | 1926 | 1927 | 1930 | 1931 | 1932 | | | |
| Rs | Rs | Rs | Rs | Rs | Rs | Rs | Rs | Rs | Rs | | |
| 100 | 1,100 | 5,000 | 6,44,850 | 1,47,000 | 51,100 | 17,04,100 | 6,61,100 | 3,69,400 | 2,01,000 | 1,01,13,450 | |
| ... | ... | .. | ... | .. | .. | . | . | | . | 4,100 | Land Acquisition Judge |
| ... | .. | . | . | .. | ... | ... | . | | .. | 1,000 | Ditto |
| .. | | ... | .. | .. | ... | | ... | | | 1,300 | Ditto |
| ... | ... | ... | .. | .. | .. | .. | .. | | ... | 500 | Ditto |
| ... | ... | . | ... | ... | .. | .. | .. | | | 27,800 | Ditto |
| ... | .. | | ... | ... | . | .. | .. | . | | 300 | Ditto |
| .. | .. | .. | . | . | . | | | .. | | 100 | Ditto |
| . | | | .. | | . | | | | | 1,800 | Ditto |
| .. | ... | . | .. | | | | | | | 700 | Ditto |
| | . | .. | ... | . | .. | ... | . | . | | 400 | Ditto |
| .. | .. | ... | .. | ... | .. | . | . | . | | 600 | Ditto |
| ... | .. | ... | ... | | .. | ... | | . | | 2,300 | Ditto |
| ... | .. | ... | ... | ... | ... | ... | ... | | | 900 | Ditto |
| . | . | .. | . | ... | . | ... | . | . | ... | 300 | Ditto |
| ... | ... | . | ... | . | | | ... | . | | 100 | Ditto |
| ... | ... | ... | ... | .. | . | ... | .. | ... | | 1,500 | Ditto |
| . | . | .. | . | ... | . | | ... | ... | . | 1,100 | Ditto |
| | ... | .. | .. | . | . | | | . | ... | 100 | Ditto |
| .. | .. | | | . | .. | | | | | 100 | Ditto |
| .. | .. | . | . | ... | . | . | . | | .. | 300 | Ditto |
| . | ... | . | .. | ... | | . | . | | | 15,000 | Ditto |
| .. | ... | .. | . | | ... | .. | | | | 100 | Ditto |
| ... | .. | ... | . | .. | . | . | | | | 1,000 | Ditto |
| ... | . | | | | ... | ... | . | | . | 100 | Ditto. |
| ... | .. | .. | | . | . | ... | .. | . | | 2,100 | Ditto |
| ... | ... | . | . | . | . | . | | | . | 700 | Ditto |
| . | ... | . | . | . | .. | . | .. | . | | 1,600 | Ditto |
| .. | ... | ... | . | . | . | | ... | ... | .. | 7,300 | Ditto |
| ... | ... | ... | ... | .. | .. | .. | .. | .. | | 21,800 | Ditto |
| ... | ... | ... | ... | ... | . | .. | | .. | ... | 1,100 | Ditto |
| ... | ... | ... | .. | ... | ... | . | .. | ... | ... | 800 | Ditto |
| ... | ... | ... | ... | ... | .. | ... | ... | ... | ... | 1,000 | Ditto |
| ... | ... | ... | . | ... | ... | .. | .. | .. | ... | 5,000 | Ditto |
| ... | ... | ... | .. | ... | . | .. | | ... | .. | 51,900 | Ditto |
| ... | . | ... | .. | ... | .. | ... | . | ... | . | 1,300 | Ditto |
| ... | ... | ... | | | | ... | . | .. | ... | 8,800 | Ditto |
| ... | .. | ... | ... | ... | .. | . | ... | ... | . | 200 | Ditto |
| 100 | 1,100 | 5,000 | 6,44,850 | 1,47,000 | 51,100 | 17,04,100 | 6,61,100 | 3,69,400 | 2,01,000 | 1,02,78,850 | |

| Ledger Folio No. | Name of Person or Fund on whose behalf held | 3½ PER CENT. | | | | 3 per cent of 1896-97 | 4 PER CENT. | | 5 PER CENT | |
|---|---|---|---|---|---|---|---|---|---|---|
| | | 1842-43 | 1854-55. | 1865 | 1900-01 | | 1915-16 | 1916-17. | 1929-47. | 1945-55. |
| | | Rs | Rs | Rs | Rs | Rs | Rs | Rs. | Rs | Rs. |
| | Brought forward . | 12,600 | 59,400 | 57,65,200 | 75,100 | 1,18,900 | .. | 15,700 | 44,500 | 3,97,700 |
| | PRESIDENCY DIVISION - *contd* | | | | | | | | | |
| | 24-PARGANAS—*contd* | | | | | | | | | |
| 3208 | L A case No 96 of 1910 . | . | . | 100 | ... | .. | .. | ... | ... | ... |
| 3209 | L A case No 136 of 1910 . | | ... | 900 | ... | .. | ... | .. | ... | .. |
| 3210 | L A case No 166 of 1910 . | .. | .. | 300 | ... | ... | .. | ... | ... | ... |
| 3213 | L A case No 238 of 1910 .. | ... | ... | 200 | ... | . | .. | ... | ... | ... |
| 3214 | L A case No 240 of 1910 .. | .. | ... | 100 | .. | ... | ... | .. | .. | ... |
| 3215 | L A case No 241 of 1910 ... | ... | ... | 100 | ... | .. | ... | ... | ... | ... |
| 3216 | L A case No 243 of 1910 . | . | ... | 800 | ... | . | ... | ... | ... | ... |
| 3217 | L A case No 245 of 1910 . | ... | .. | 600 | .. | .. | ... | .. | ... | . |
| 3218 | L A case No 247 of 1910 | ... | ... | 100 | ... | ... | ... | ... | ... | ... |
| 3219 | L A case No 248 of 1910 ... | ... | ... | 100 | ... | ... | ... | ... | ... | ... |
| 3220 | L A case No 249 of 1910 ... | ... | ... | 500 | ... | .. | ... | ... | ... | ... |
| 3221 | L. A case No 250 of 1910 . | ... | ... | 500 | ... | .. | .. | ... | ... | ... |
| 3222 | L A case No 264 of 1910 | .. | ... | 100 | ... | . | ... | ... | ... | ... |
| 3223 | L A case No 266 of 1910 . | ... | ... | 100 | ... | .. | .. | ... | ... | ... |
| 3224 | L A. case No 267 of 1910 . | | . | 1,200 | ... | ... | ... | ... | ... | ... |
| 3225 | L A case No 268 of 1910 ... | ... | ... | 100 | ... | ... | ... | ... | ... | ... |
| 3226 | L A case No 276 of 1910 . | . | . | 800 | ... | ... | ... | ... | ... | ... |
| 3227 | L A case No 294 of 1910 | ... | ... | 1,200 | ... | .. | ... | .. | ... | ... |
| 3228 | L A case No 295 of 1910 .. | ... | ... | 11,900 | . | ... | ... | ... | ... | ... |
| 3229 | L. A case No 296 of 1910 ... | .. | ... | 400 | ... | ... | .. | ... | ... | ... |
| 3231 | L A case No 300 of 1910 ... | .. | ... | 100 | ... | ... | ... | ... | ... | ... |
| 3232 | L A case No 308 of 1910 .. | .. | ... | 200 | ... | ... | ... | ... | ... | ... |
| 3233 | L A case No 309 of 1910 | ... | ... | 400 | ... | ... | ... | ... | ... | ... |
| 3234 | L A case No 316 of 1910 ... | ... | ... | .. | ... | ... | ... | ... | ... | ... |
| 3235 | L A case No 317 of 1910 ... | ... | ... | ... | ... | ... | ... | ... | ... | ... |
| 3236 | L A case No 318 of 1910 .. | ... | ... | ... | ... | ... | ... | ... | ... | ... |
| 3237 | L A case No 359 of 1910 ... | ... | ... | 600 | ... | ... | .. | ... | ... | ... |
| 3238 | L A case No 380 of 1910 ... | ... | ... | 200 | ... | ... | ... | ... | ... | ... |
| 3239 | L. A case No 384 of 1910 ... | . | ... | 8,700 | ... | ... | ... | ... | ... | ... |
| 3240 | L A case No 433 of 1910 .. | ... | ... | 200 | ... | ... | ... | ... | ... | ... |
| 3241 | L A case No 459 of 1910 ... | .. | ... | 60,900 | ... | ... | ... | ... | ... | ... |
| 3242 | L A case No 462 of 1910 .. | ... | ... | 2,700 | ... | ... | ... | ... | ... | ... |
| 3243 | L. A case No 465 of 1910 ... | ... | ... | 1,400 | ... | ... | ... | ... | ... | ... |
| 3244 | L A case No 540 of 1910 ... | ... | ... | 2,700 | ... | ... | ... | ... | ... | ... |
| 3245 | L. A case No 13 of 1911 ... | ... | ... | 800 | ... | ... | ... | ... | .. | ... |
| 3246 | L A case No 14 of 1911 ... | ... | ... | 800 | ... | ... | .. | ... | ... | ... |
| 3247 | L. A. case No. 55 of 1911 ... | | ... | 800 | ... | ... | ... | ... | ... | ... |
| 3248 | L A case No. 63 of 1911 ... | ... | ... | 200 | ... | ... | ... | ... | ... | ... |
| | Carried over ... | 12,600 | 59,400 | 58,65,600 | 75,100 | 1,18,900 | ... | 15,700 | 44,500 | 3,97,700 |

| 5½ PER CENT. | | | | 6 PER CENT | | | | | Debentures and Railway shares | Total | Name of officer to whom interest is sent |
|---|---|---|---|---|---|---|---|---|---|---|---|
| 1922 | 1923 | 1925 | 1928 | 1926. | 1927. | 1930 | 1931 | 1932 | | | |
| Rs. | Rs | Rs | Rs | Rs | Rs | Rs | Rs | Rs | Rs | Rs | |
| 100 | 1,100 | 5,000 | 6,44,350 | 1,47,000 | 51,100 | 17,04,100 | 6,61,100 | 3,69,400 | 2,01,000 | 1,02,78,850 | |
| ... | ... | . | .. | . | | ... | ... | . | . | 100 | Land Acquisition Judge |
| ... | .. | | ... | .. | . | ... | ... | . | . | 900 | Ditto |
| ... | ... | .. | ... | ... | .. | .. | . | . | | 300 | Ditto |
| ... | ... | ... | . | . | . | ... | .. | ... | . | 200 | Ditto |
| ... | ... | .. | .. | ... | ... | ... | | ... | .. | 100 | Ditto. |
| ... | ... | . | ... | .. | ... | .. | . | | .. | 100 | Ditto. |
| ... | ... | ... | ... | .. | ... | ... | . | .. | . | 800 | Ditto |
| ... | .. | .. | . | ... | .. | .. | .. | | | 600 | Ditto |
| ... | .. | .. | ... | ... | ... | . | | . | . | 100 | Ditto |
| ... | | .. | | .. | ... | . | | | | 100 | Ditto |
| ... | .. | .. | .. | .. | . | ... | ... | .. | .. | 500 | Ditto |
| . | ... | ... | ... | ... | . | ... | .. | ... | ... | 500 | Ditto |
| ... | .. | ... | .. | .. | .. | ... | .. | . | . | 100 | Ditto |
| ... | ... | .. | ... | .. | .. | .. | .. | . | | 100 | Ditto |
| ... | ... | . | .. | | ... | ... | .. | . | .. | 1,200 | Ditto |
| ... | ... | . | ... | ... | . | . | .. | . | ... | 100 | Ditto |
| ... | .. | ... | .. | . | . | ... | .. | | ... | 800 | Ditto |
| ... | . | ... | . | ... | ... | .. | .. | ... | . | 1,200 | Ditto |
| ... | ... | . | .. | .. | ... | ... | ... | .. | . | 11,900 | Ditto |
| ... | ... | . | .. | . | ... | ... | ... | . | | 400 | Ditto |
| ... | . | ... | . | ... | .. | ... | . | ... | | 100 | Ditto |
| ... | ... | ... | ... | ... | . | ... | ... | ... | .. | 200 | Ditto |
| ... | ... | .. | ... | ... | . | ... | ... | ... | | 400 | Ditto |
| ... | ... | .. | 600 | ... | .. | ... | ... | ... | .. | 600 | Ditto |
| ... | ... | ... | 14,700 | ... | ... | ... | ... | ... | ... | 14,700 | Ditto |
| ... | ... | . | 1,400 | .. | ... | ... | ... | ... | . | 1,400 | Ditto |
| ... | ... | .. | ... | ... | ... | ... | ... | ... | .. | 600 | Ditto |
| ... | ... | ... | ... | ... | ... | ... | ... | ... | . | 200 | Ditto |
| ... | ... | ... | ... | ... | ... | ... | ... | ... | .. | 8,700 | Ditto |
| ... | ... | ... | ... | ... | ... | ... | ... | ... | .. | 200 | Ditto |
| ... | ... | ... | ... | ... | ... | ... | .. | .. | ... | 60,900 | Ditto |
| ... | ... | ... | ... | ... | ... | ... | ... | ... | ... | 2,700 | Ditto |
| ... | ... | ... | ... | ... | ... | ... | ... | ... | ... | 1,400 | Ditto |
| ... | ... | ... | ... | ... | ... | ... | ... | ... | ... | 2,700 | Ditto |
| ... | ... | ... | ... | ... | ... | ... | ... | ... | ... | 800 | Ditto |
| ... | ... | ... | ... | ... | .. | ... | ... | .. | . | 800 | Ditto. |
| ... | ... | ... | ... | ... | ... | ... | ... | ... | .. | 800 | Ditto |
| ... | ... | ... | ... | ... | ... | ... | ... | ... | .. | 200 | Ditto |
| 100 | 1,100 | 5,000 | 6,61,050 | 1,47,000 | 51,100 | 17,04,100 | 6,61,100 | 3,69,400 | 2,01,000 | 1,02,78,850 | |

| Ledger Folio No. | Name of Person or Fund on whose behalf held | 2½ PER CENT | | | | 3 per cent of 1896-97 | 4 PER CENT | | 5 PER CENT. | |
|---|---|---|---|---|---|---|---|---|---|---|
| | | 1842-43 | 1854 55 | 1865 | 1900-01 | | 1915-16 | 1916-17 | 1929-47 | 1945-55. |
| | | Rs. | Rs | Rs | Rs | Rs | Rs. | Rs | Rs | Rs |
| | Brought forward ... | 12,600 | 59,400 | 58,65,000 | 75,100 | 1,18,900 | .. | 15,700 | 44,500 | 3,97,700 |
| | PRESIDENCY DIVISION —*contd* | | | | | | | | | |
| | 24-PARGANAS—*contd* | | | | | | | | | |
| 3249 | L A case No 74 of 1911 ... | . | . | 6,900 | .. | .. | ... | . | .. | ... |
| 3250 | L A case No 106 of 1911 | ... | .. | 2,000 | . | | . | ... | ... | ... |
| 3251 | L A case No 107 of 1911 ... | .. | . | 3,300 | .. | | ... | .. | .. | .. |
| 3252 | L A case No 109 of 1911 .. | | ... | 400 | | | . | .. | . | ... |
| 3253 | L A case No 110 of 1911 .. | ... | ... | 1,700 | ... | | . | .. | .. | ... |
| 3253 | L A case No 116 of 1911 | | ... | .. | . | . | . | ... | .. | .. |
| 3254 | L A case No 122 of 1911 | .. | ... | 1,000 | ... | ... | ... | ... | ... | ... |
| 3255 | L A case No 126 of 1911 . | .. | ... | 26,300 | ... | ... | . | ... | ... | ... |
| 3256 | L A case No 142 of 1911 .. | | ... | 200 | ... | . | . | . | .. | .. |
| 3257 | L A case No 278 of 1911 ... | . | ... | 1,000 | ... | .. | . | .. | ... | . |
| 3258 | L A case No 3 of 1912 .. | ... | . | 200 | . | | .. | .. | | ... |
| 3259 | L A case No 31 of 1912 | .. | ... | 1,100 | . | ... | . | .. | .. | . |
| 3260 | L A case No 95 of 1912 . | ... | ... | 500 | . | | .. | | ... | ... |
| 3261 | L A case No 157 of 1912 ... | . | . | 1,000 | . | | . | .. | . | ... |
| 3262 | L A case No 193 of 1912 .. | .. | ... | 2,400 | ... | ... | .. | .. | ... | ... |
| 3263 | L. A case No 202 of 1912 ... | .. | .. | 1,900 | ... | .. | ... | .. | .. | ... |
| 3264 | L A case No 209 of 1912 . | ... | .. | 100 | . | .. | .. | .. | ... | ... |
| 3265 | L A case No 219 of 1912 ... | . | ... | 100 | .. | ... | .. | .. | .. | ... |
| 3266 | L A case No 226 of 1912 .. | ... | .. | 100 | ... | .. | ... | ... | .. | ... |
| 3267 | L A case No 229 of 1912 .. | ... | ... | 500 | ... | ... | .. | . | .. | .. |
| 3268 | L A case No 230 of 1912 ... | ... | ... | 100 | ... | ... | .. | | ... | ... |
| 3270 | L A case No 247 of 1912 ... | .. | ... | 200 | . | . | | .. | .. | ... |
| 3271 | L A case No 251 of 1912 ... | ... | ... | 100 | ... | ... | .. | .. | ... | ... |
| 3272 | L A case No 254 of 1912 ... | . | ... | 900 | .. | ... | .. | .. | .. | .. |
| 3273 | L A case No 316 of 1912 ... | .. | ... | 200 | ... | .. | . | .. | ... | ... |
| 3274 | L A case No 365 of 1912 ... | .. | ... | .. | ... | | . | .. | . | 300 |
| 3275 | L A case No 378 of 1912 ... | .. | ... | 4,900 | .. | ... | ... | ... | ... | ... |
| 3276 | L A case No 390 of 1912 ... | ... | .. | 100 | ... | ... | ... | ... | ... | ... |
| 3277 | L A case No 406 of 1912 ... | ... | ... | 100 | ... | ... | ... | ... | .. | ... |
| 3278 | L A case No 410 of 1912 | .. | ... | 1,200 | ... | ... | .. | .. | ... | ... |
| 3279 | L A case No 40 of 1913 ... | ... | .. | 3,700 | ... | ... | ... | .. | ... | ... |
| 3280 | L A case No 41 of 1913 .. | ... | .. | 56,000 | ... | .. | ... | ... | ... | ... |
| 3281 | L A case No 50 of 1913 .. | ... | ... | 3,02,900 | .. | ... | .. | ... | ... | ... |
| 3282 | L A case No 55 of 1913 ... | .. | ... | 3,900 | ... | .. | ... | ... | ... | ... |
| 3283 | L A case No 63 of 1913 ... | ... | .. | 3,000 | ... | .. | ... | ... | ... | ... |
| 3284 | L A. case No 65 of 1913 ... | ... | ... | 4,000 | ... | ... | ... | .. | ... | ... |
| 3285 | L A case No 72 of 1913 .. | .. | ... | 10,600 | ... | ... | ... | ... | ... | ... |
| 3286 | L A case No 95 of 1913 ... | ... | ... | 600 | .. | .. | ... | ... | ... | ... |
| 3287 | L A case No 107 of 1913 ... | ... | ... | 100 | ... | ... | ... | ... | ... | ... |
| | Carried over .. | 12,600 | 59,400 | 63,13,900 | 75,100 | 1,18,900 | ... | 15,700 | 44,500 | 3,98,00 |

| 5½ PER CENT | | | | 6 PER CENT | | | | | Debentures and Railway shares | Total | Name of officer to whom interest is sent. |
|---|---|---|---|---|---|---|---|---|---|---|---|
| 1922 | 1923 | 1925. | 1928. | 1926 | 1927 | 1930 | 1931. | 1932 | | | |
| Rs | Rs | Rs. | Rs | Rs | Rs | Rs | Rs | Rs | Rs | [illegible] | |
| 100 | 1,100 | 5,000 | 6,61,050 | 1,47,000 | 51,100 | 17,04,100 | 6,61,100 | 3,69,400 | 2,01,000 | 1,02,73,350 | |
| ... | .. | | | . | . | | | | | 6,900 | Land Acquisition Judge |
| .. | . | . | . | | .. | ... | | | | 2,000 | Ditto |
| | . | | | . | .. | .. | | . | | 3,500 | Ditto |
| .. | ... | | . | ... | . | . | | . | | 400 | Ditto |
| ... | . | . | | | | . | | | | 1,700 | Ditto |
| ... | ... | . | . | . | | 4,600 | . | | . | 4,600 | Ditto |
| . | | | | . | | | | | | 1,000 | Ditto |
| | | | | | | . | . | .. | | 26,800 | Ditto |
| . | . | | | | | | | | | 200 | Ditto |
| .. | | . | | | | | | | . | 1,000 | Ditto |
| .. | | | | . | .. | | | | | 200 | Ditto |
| .. | | | | | | . | | | | 1,100 | Ditto |
| . | | | . | | | | | | | 500 | Ditto |
| | . | .. | | | | | | | | 1,000 | Ditto |
| | | . | | . | | | | | | 2,400 | Ditto |
| .. | | | | | | .. | | | | 1,900 | Ditto |
| | | .. | | | . | | . | | | 100 | Ditto |
| . | | | | | | | | ... | | 100 | Ditto |
| | | . | | | | ... | | | | 100 | Ditto |
| ... | .. | . | .. | .. | . | | | | . | 500 | Ditto |
| . | | | | | . | | | . | | 100 | Ditto |
| . | .. | . | | | | | | | | 200 | Ditto |
| . | | | .. | .. | ... | | | | .. | 100 | Ditto |
| ... | .. | . | ... | ... | . | ... | | . | .. | 900 | Ditto |
| .. | | | | | | . | | | | 200 | Ditto |
| .. | ... | .. | | | | | .. | . | | 300 | Ditto |
| ... | .. | .. | . | . | . | | . | .. | . | 4,900 | Ditto |
| ... | .. | .. | | .. | .. | | .. | | . | 100 | Ditto |
| .. | | ... | . | .. | .. | | | | . | 100 | Ditto |
| ... | .. | . | ... | .. | ... | .. | .. | .. | .. | 1,200 | Ditto |
| ... | . | ... | . | . | . | . | . | | | 8,700 | Ditto |
| ... | ... | ... | ... | .. | | . | | . | . | 56,000 | Ditto |
| .. | .. | ... | .. | ... | .. | ... | . | .. | . | 3,02,900 | Ditto |
| ... | ... | .. | ... | ... | ... | .. | | | .. | 3,900 | Ditto |
| ... | ... | ... | .. | .. | ... | ... | .. | | .. | 3,000 | Ditto |
| ... | .. | ... | ... | ... | ... | .. | . | ... | .. | 4,000 | Ditto |
| ... | ... | ... | .. | .. | . | ... | . | | . | 10,600 | Ditto |
| ... | ... | ... | ... | ... | ... | .. | ... | ... | | 600 | Ditto |
| ... | .. | ... | ... | .. | ... | ... | . | .. | .. | 100 | Ditto |
| 100 | 1,100 | 5,000 | 6,61,050 | 1,47,000 | 51,100 | 17,08,700 | 6,61,100 | 3,69,400 | 2,01,000 | 1,08,43,550 | |

| Ledger Folio No | Name of Person or Fund on whose behalf held | 3½ PER CENT | | | | 3 per cent of 1896-97 | 4 PER CENT. | | 5 PER CENT. | |
|---|---|---|---|---|---|---|---|---|---|---|
| | | 1842-43 | 1854-55 | 1865 | 1900 01 | | 1915 16 | 1916-17 | 1924-47 | 1945-55. |
| | | Rs. | Rs | Rs | Rs | Rs | Rs | Rs | Rs | Rs |
| | Brought forward . | 12 600 | 59,400 | 65,13,800 | 75,100 | 1,18,900 | | 15,700 | 44,500 | 2,98,000 |
| | PRESIDENCY DIVISION—*contd* | | | | | | | | | |
| | 24-PARGANAS—*contd* | | | | | | | | | |
| 3288 | L A case No 128 of 1913 . | .. | . | 200 | .. | ... | . | ... | . | . |
| 3289 | L A case No 157 of 1913 . | . | | 49,100 | | .. | | . | ... | . |
| 3290 | L A cases Nos 40 and 157 of 1913 .. . . | .. | . | 15,600 | | | | | .. | . |
| 3291 | L A case No 169 of 1913 | .. | | 3,300 | . | | .. | ... | ... | .. |
| 3292 | L A case No 176 of 1913 .. | .. | .. | 60,800 | | . | | .. | ... | .. |
| 3293 | L A case No 37 of 1914 | | . | 600 | . | | | . | ... | ... |
| 3294 | L A case No 43 of 1914 .. | .. | .. | 900 | . | . | . | . | . | ... |
| 3295 | L A case No 48 of 1914 | | .. | 600 | . | | | ... | . | .. |
| 3296 | L A case No 51 of 1914 | ... | | 200 | . | . | . | ... | . | . |
| 3297 | L A case No 59 of 1914 | | | 37,200 | | | .. | ... | .. | ... |
| 3298 | L A case No 63 of 1914 . | . | | 100 | | .. | . | . | . | . |
| 3299 | L A case No 65 of 1914 | | | 400 | ... | .. | | . | | . |
| 3300 | L A case No 66 of 1914 . | | .. | 1,06,700 | | | | | .. | |
| 3301 | L A case No 67 of 1914 .. | | | 100 | | | | [illegible] | ... | . |
| 3302 | L A case No 94 of 1914 | . | | 100 | .. | . | | . | .. | .. |
| 3303 | L A case No 30 of 1915 | . | | 1,000 | .. | | .. | .. | .. | . |
| 3304 | L A case No 31 of 1915 . | .. | ... | 200 | .. | ... | .. | .. | ... | |
| 3305 | L A case No 54 of 1915 | . | | 600 | . | . | | ... | | . |
| 3306 | L A case No 80 of 1915 . | .. | ... | 200 | .. | ... | | | .. | . |
| 3307 | L A case No 81 of 1915 | . | | 200 | ... | | . | . | . | .. |
| 3308 | L A case No 95 of 1915 . | ... | ... | 200 | ... | ... | ... | .. | .. | |
| 3310 | L A case No 134 of 1915 . | | | 200 | | .. | .. | ... | ... | .. |
| 3311 | L A case No 137 of 1915 .. | .. | .. | 700 | ... | ... | . | ... | ... | .. |
| 3312 | L A case No 147 of 1915 | | .. | 200 | | .. | .. | | .. | ... |
| 3313 | L. A case No 151 of 1915 | ... | ... | 800 | .. | ... | ... | ... | ... | .. |
| 3314 | L A case No 155 of 1915 . | ... | ... | 1,11,300 | ... | .. | .. | . | . | ... |
| 3315 | L A case No 158 of 1915 ... | | ... | 2,400 | ... | ... | ... | ... | ... | .. |
| 3316 | L A case No 162 of 1915 ... | ... | ... | 200 | ... | ... | ... | ... | ... | ... |
| 3317 | L A case No 4 of 1916 .. | ... | .. | 700 | ... | ... | ... | ... | .. | ... |
| 3318 | L A case No 7 of 1916 .. | . | .. | ... | ... | .. | ... | ... | ... | ... |
| 3319 | L A case No. 52 of 1916 . | ... | ... | 300 | . | ... | .. | ... | ... | .. |
| 3320 | L A case No 56 of 1916 ... | ... | ... | 7,600 | ... | ... | ... | ... | ... | ... |
| 3321 | L A case No 61 of 1916 .. | ... | .. | 600 | ... | ... | ... | ... | ... | ... |
| 3322 | L A case No 70 of 1916 . | ... | . | 4,100 | .. | ... | ... | ... | ... | ... |
| 3323 | L A case No 85 of 1916 ... | .. | ... | 700 | ... | ... | ... | ... | ... | ... |
| 3324 | L A case No 93 of 1916 ... | .. | .. | 900 | ... | ... | ... | ... | ... | ... |
| 3325 | L. A case No 94 of 1916 ... | ... | .. | 1,600 | ... | ... | ... | ... | ... | ... |
| 3326 | L. A case No 1 of 1917 .. | ... | ... | 1,400 | ... | ... | ... | ... | ... | ... |
| 3327 | L A case No 18 of 1917 ... | | ... | 400 | ... | ... | ... | ... | ... | ... |
| 3329 | L A case No 26 of 1917 ... | ... | ... | 600 | ... | ... | ... | ... | .. | ... |
| 3330 | L A case No 49 of 1917 ... | ... | .. | 2,200 | .. | ... | ... | .. | ... | ... |
| | Carried over ... | 12,600 | 59,400 | 67,29,000 | 75,100 | 1,18,900 | ... | 15,700 | 44,500 | 2,98,000 |

| 5½ PER CENT. | | | | 6 PER CENT | | | | | Debentures and Railway shares | Total. | Name of officer to whom interest is sent |
|---|---|---|---|---|---|---|---|---|---|---|---|
| 1922. | 1923 | 1925 | 1928. | 1926 | 1927 | 1930 | 1931 | 1932 | | | |
| Rs. | Rs | Rs | Rs | Rs. | Rs | Rs | Rs | Rs | Rs | Rs | |
| 100 | 100 | 5,000 | 6,61,050 | 1,47,000 | 51,100 | 17,08,700 | 6,61,100 | 3,69,400 | 2,01,000 | 1,08,43,550 | |
| .. | .. | | | | . | .. | . | .. | | 200 | Land Acquisition Judge |
| . | . | | | | | . | . | .. | | 49,100 | Ditto |
| | . | .. | | | .. | | | | . | 15,600 | Ditto |
| .. | | | | | .. | . | .. | . | . | 3,300 | Ditto |
| . | | | | | | | . | | | 60,800 | Ditto |
| . | . | . | | | | | | | . | 600 | Ditto |
| ... | | | . | | | | .. | . | | 900 | Ditto |
| .. | . | . | | | | | . | | .. | 600 | Ditto |
| . | | | | | | | .. | | | 200 | Ditto |
| . | .. | | | | . | | | | . | 37,200 | Ditto |
| | . | | | | | | ... | | | 100 | Ditto |
| | | | | | | . | | | | 400 | Ditto |
| | | | | | | | | | | 1,06,700 | Ditto |
| | | | . | | | | . | .. | | 100 | Ditto |
| .. | . | | . | | | | | | | 100 | Ditto |
| .. | . | | | | | | .. | ... | | 1,000 | Ditto |
| .. | . | | . | . | | 800 | ... | . | | 1,000 | Ditto |
| ... | . | . | | | | | | | | 600 | Ditto |
| .. | . | | | | | .. | | | | 200 | Ditto |
| . | | . | | | . | | | | . | 200 | Ditto |
| | . | | | | | | | | | 200 | Ditto |
| . | . | | | | . | | | | | 200 | Ditto |
| ... | ... | | | | | | . | . | . | 700 | Ditto |
| .. | .. | . | | .. | | . | . | | . | 200 | Ditto |
| | | | . | . | ... | . | | | | 800 | Ditto |
| ... | | | | | | | | ... | . | 1,11,300 | Ditto |
| ... | | . | . | . | | . | | . | | 2,400 | Ditto |
| ... | . | | .. | .. | | . | . | . | | 200 | Ditto |
| ... | | . | | ... | | ... | | .. | .. | 700 | Ditto |
| ... | ... | .. | 15,600 | ... | . | . | . | . | . | 15,600 | Ditto |
| ... | ... | ... | | . | . | .. | .. | . | .. | 800 | Ditto |
| ... | . | ... | .. | ... | ... | ... | | | ... | 7,600 | Ditto |
| ... | ... | .. | . | ... | ... | . | .. | ... | . | 600 | Ditto |
| ... | ... | . | . | . | .. | .. | .. | .. | ... | 4,100 | Ditto |
| ... | ... | .. | | ... | .. | .. | .. | .. | ... | 700 | Ditto |
| ... | .. | ... | ... | . | ... | .. | ... | ... | ... | 900 | Ditto |
| ... | | . | .. | .. | ... | ... | ... | ... | .. | 1,600 | Ditto. |
| ... | ... | .. | .. | .. | .. | ... | ... | .. | | 1,400 | Ditto |
| ... | .. | ... | .. | .. | ... | ... | .. | . | ... | 400 | Ditto |
| ... | ... | ... | ... | .. | ... | ... | | ... | .. | 600 | Ditto |
| ... | ... | .. | ... | ... | .. | .. | .. | .. | | 2,200 | Ditto. |
| 100 | 1,100 | 5,000 | 6,76,650 | 1,47,000 | 51,100 | 17,09,500 | 6,61,100 | 3,69,400 | 2,01,000 | 1,12,75,150 | |

| Ledger Folio No | Name of Person or Fund on whose behalf held. | 3½ PER CENT. | | | | 3 per cent of 1896-97 | 4 PER CENT | | 5 PER CENT. | |
|---|---|---|---|---|---|---|---|---|---|---|
| | | 1842-43 | 1854 55 | 1865. | 1900-01 | | 1915-16 | 1916-17 | 1922-47 | 1945-55 |
| | | Rs | Rs | Rs | Rs | Rs | Rs | Rs | Rs | Rs |
| | Brought forward . | 12,600 | 59,400 | 67,29,000 | 75,100 | 1,18,900 | . | 15,700 | 44,500 | 3,98,000 |
| | PRESIDENCY DIVISION—*contd* | | | | | | | | | |
| | 24-PARGANAS—*contd* | | | | | | | | | |
| 3331 | L A case No 50 of 1917 | . | | 700 | | . | ... | . | ... | ... |
| 3332 | L A case No 51 of 1917 | | .. | 3,200 | ... | . | ... | . | .. | ... |
| 3333 | L A case No 77 of 1917 | | . | 1,600 | . | . | . | . | . | ... |
| 3334 | L A case No 116 of 1917 .. | | | 300 | . | . | | ... | .. | ... |
| 3335 | L A case No 130 of 1917 | . | | 2,100 | . | . | .. | . | .. | .. |
| 3336 | L A case No 131 of 1917 | | | 300 | . | | | . | | ... |
| 3337 | L A case No 142 of 1917 | .. | . | 300 | | .. | . | ... | .. | .. |
| 3338 | L A case No 146 of 1917 | . | | 100 | .. | . | | .. | . | ... |
| 3339 | L A case No 155 of 1917 (claimant Khantamoyi Debi) | . | | 200 | | . | | .. | | ... |
| 3340 | L A case No 155 of 1917 (claimant Ichhamoyi Debi) | .. | . | 200 | | .. | | . | | . |
| 3341 | L A case No 162 of 1917 | . | | 100 | | | ... | | . | |
| 3342 | L A case No 16 of 1918 | . | ... | 2,400 | | . | . | | | . |
| 3343 | L A case No 38 of 1918 . | .. | | 200 | | | . | | | |
| 3344 | L A case No 39 of 1918 | | | 300 | | | | | . | .. |
| 3345 | L A case No 43 of 1918 | . | | 12,800 | . | | | | ... | ... |
| 3346 | L A case No 44 of 1918 | | ... | 900 | . | .. | | ... | | ... |
| 3348 | L A case No 66 of 1918 | | | | | | | | | .. |
| 3349 | L A case No 68 of 1918 | | . | 14,700 | . | ... | | | ... | . |
| 3482 | L A case No 94 of 1918 ... | . | | | . | | ... | | .. | . |
| 3351 | L A case No 99 of 1918 | | | 6,700 | | . | ... | .. | | .. |
| 3352 | L A case No 103 of 1918 (claimant minor Krishnadhan Sadhukhan) . | . | . | . | .. | | . | | . | .. |
| 3353 | L A case No 103 of 1918 (claimant Balai Chand Sadhukhan) | . | . | . | | .. | | ... | ... | ... |
| 3354 | L A case No 103 of 1918 (claimants Sachindra Kumar and Satyendra Nath Biswas) | . | .. | . | | . | .. | ... | ... | ... |
| 3355 | L A case No 113 of 1918 | | | 1,800 | .. | ... | .. | ... | ... | ... |
| 3356 | L A case No 119 of 1918 . | | .. | 3,600 | ... | .. | .. | ... | . | ... |
| 3357 | L A case No 129 of 1918 .. | . | . | 300 | .. | ... | ... | .. | ... | ... |
| 3358 | L A case No 114 of 1918 | | | 3,500 | . | | ... | .. | .. | . |
| 3359 | L A case No 145 of 1918 | . | . | 700 | . | .. | ... | . | ... | ... |
| 3360 | L A case No 162 of 1918 | | . | 1,200 | ... | ... | .. | ... | ... | ... |
| 3361 | L A case No 169 of 1918 .. | . | .. | 200 | ... | ... | ... | ... | ... | ... |
| 3362 | L A case No 14 of 1919 .. | | ... | 4,700 | ... | ... | ... | .. | ... | ... |
| 3363 | L A case No 16 of 1919 (claimants Gopi Nath and Badya Nath Basak) . .. | . | ... | 3,300 | . | .. | . | ... | ... | ... |
| 3364 | L A case No 16 of 1919 (claimants, Sib Nath and Sambhu Nath Basak) ... .. . | .. | . | 3,200 | .. | ... | .. | ... | ... | ... |
| 3365 | L A case No 16 of 1919 (claimant Kanai Lal Basak) .. | ... | .. | 4,900 | ... | .. | ... | | ... | ... |
| | Carried over .. | 12,600 | 59,400 | 68,03,500 | 75,100 | 1,18,900 | ... | 15,700 | 44,500 | 3,98,000 |

| 5½ PER CENT | | | | 6 PER CENT | | | | | Debentures and Railway shares | Total | Name of officer to whom interest is sent |
|---|---|---|---|---|---|---|---|---|---|---|---|
| 1922 | 1923 | 1925 | 1928. | 1926. | 1927 | 1930 | 1931 | 1932 | | | |
| Rs | Rs | Rs | Rs | Rs | Rs | Rs | Rs | Rs | Rs | Rs | |
| 100 | 1,100 | 5,000 | 6,79,650 | 1,47,000 | 51,100 | 17,09,500 | 6,61,100 | 3,69,400 | 2,01,000 | 1,12,75,150 | |
| | . | | . | | .. | . | | | | 700 | Land Acquisition Judge |
| .. | | | | | | . | | | | 3,200 | Ditto |
| . | .. | | | | .. | . | | | | 1,600 | Ditto |
| . | | . | | | | . | | | | 300 | Ditto |
| | | | | — | | . | | | | 2,100 | Ditto |
| | | | | | . | ... | | | | 300 | Ditto |
| | . | | | | | | . | | | 300 | Ditto |
| .. | | | | | | | | | | 100 | Ditto |
| | | | | | | | | | | 200 | Ditto |
| | | | | | | | | | . | 200 | Ditto |
| | | | | | | | ... | | | 100 | Ditto |
| | | | | | . | | | | | 2,400 | Ditto |
| | | | . | | . | . | | | | 200 | Ditto |
| | | | | | | | . | | | 300 | Ditto |
| | | | | | | | | | | 12,800 | Ditto |
| | | | | | | . | . | | | 900 | Ditto |
| | | | 52 000 | | | | . | | | 52,000 | Ditto |
| | | | | | | | | | | 11,700 | Ditto |
| | | | | | | 2,800 | | | | 2,800 | Ditto |
| | | | | .. | | | . | | | 6,100 | Ditto |
| | | | 5,600 | | | | . | | | 5,600 | Ditto |
| | | | 2,900 | | | | | . | . | 2,900 | Ditto |
| . | | . | 100 | | | | . | | | 100 | Ditto |
| . | . | . | | | | . | .. | | .. | 1,800 | Ditto |
| . | | | | . | . | | | .. | . | 3,600 | Ditto |
| . | | . | | . | .. | | | | | 300 | Ditto |
| | | | . | | | .. | ... | . | . | 3,500 | Ditto |
| | | | . | | | | | ... | .. | 700 | Ditto |
| .. | | . | . | | | .. | .. | . | ... | 1,200 | Ditto |
| | .. | .. | | . | . | | | .. | ... | 200 | Ditto |
| . | . | . | .. | | .. | | | .. | ... | 4,700 | Ditto |
| . | | . | | | .. | . | | | | 3,300 | Ditto |
| ... | .. | ... | .. | .. | .. | .. | .. | . | ... | 3,200 | Ditto |
| ... | ... | ... | .. | ... | .. | .. | ... | .. | ... | 4,900 | Ditto |
| 100 | 1,100 | 5,000 | 7,87,250 | 1,47,000 | 51,100 | 17,12,300 | 6,61,100 | 3,69,400 | 2,01,000 | 1,14,13,050 | |

| Ledger Folio No | Name of Person or Fund on whose behalf held | 3½ per cent | | | | 3 per cent of 1896-97. | 4 per cent | | 5 per cent | |
|---|---|---|---|---|---|---|---|---|---|---|
| | | 1842-43 | 1854-55 | 1865 | 1900-0 | | 1915-16 | 1916-17 | 1929-47 | 1945-55 |
| | | Rs. | Rs | Rs | Rs | Rs | Rs | Rs | Rs | Rs |
| | Brought forward | 12,600 | 59,400 | 68,03,500 | 75,100 | 1,18,900 | | 15,700 | 44,500 | 3,98,000 |
| | PRESIDENCY DIVISION —*contd* | | | | | | | | | |
| | 24-PARGANAS—*contd* | | | | | | | | | |
| 3366 | L A case No 17 of 1919 (claimant Jamini Bhushan Ray Choudhuri) .. .. | | | 400 | | | | | .. | |
| 3368 | L A case No 17 of 1919 (claimant Raj Lakshmi Debi) ... | | | 500 | | . | | . | . | . |
| 3369 | L A case No 18 of 1919 | | | 200 | | . | | | | |
| 3370 | L A case No 19 of 1919 .. | | | 1,000 | | | | | | |
| 3371 | L A case No 30 of 1919 .. | | | . | . | | . | | . | 3,500 |
| 3372 | L A case No 38 of 1919 | .. | | 600 | .. | .. | | | . | .. |
| 3373 | L A case No 39 of 1919 (claimants Subodh and Sudin Kumar Mittra) ... .. | | | . | . | . | | | | |
| 3374 | L A case No 39 of 1919 (claimant Nabin Kishori Dasi) . | | | | | | | | . | |
| 3377 | L A case No 101 of 1919 . | . | . | 900 | . | | | . | | |
| 3378 | L A case No 118 of 1919 | | .. | | | | | | ... | |
| 3379 | L A case No 127 of 1919 | | | 1,000 | . | | | | | ... |
| 3379 | L A case No 237 of 1919 . | | .. | 500 | | | | | | |
| 3380 | L A case No 251 of 1919 (claimant Tarapada Ghose) | | | | | .. | | | | 6,800 |
| 3381 | L A case No 251 of 1919 (claimant Satis Chandra Ghose) | | | | | | | | | 63,000 |
| 3382 | L A case No 251 of 1919 claimant Susil Krishna Mukerji) | | . | | | | | | . | 4,900 |
| 3383 | L A case No 251 of 1919 (claimant Bejoy Kumar Adhya and others) ... . ... . | . | | | . | | | | | 4,100 |
| 3384 | L A case No 251 of 1919 (claimant Hari Har Mukerji and others) . ... . | | | | . | .. | | | | 2,500 |
| 3385 | L A case No 251 of 1919 (claimant Golam Akbar Matwali) ... .. ... | . | | | . | | | | ... | 9,100 |
| 3388 | L A case No 251 of 1919 (claimants Makhan Lal Mukerji and others) ... .. ... | .. | . | | . | | | .. | .. | 200 |
| 3390 | L A case No 251 of 1919 (claimant Matwali, Hugli Emambara) . ... ... | | . | | .. | . | . | ... | .. | 54,700 |
| 3391 | L A case No 287 of 1919 .. | | | 200 | ... | ... | ... | .. | . | ... |
| 3392 | L A case No 293 of 1919 | . | | 97,400 | ... | ... | .. | ... | .. | |
| 3393 | L A case No 294 of 1919 ... | | . | 2,800 | ... | . | . | . | .. | ... |
| 3394 | L A case No. 296 of 1919 ... | ... | ... | 14,100 | ... | .. | ... | | ... | ... |
| 3395 | L A case No 299 of 1919 ... | .. | ... | 1,200 | .. | .. | .. | | ... | ... |
| 3396 | L. A case No 300 of 1919 (claimant Secretary of State for India) ... ... ... | .. | ... | 8,800 | ... | . | ... | ... | . | ... |
| | Carried over ... | 12,600 | 59,400 | 68,33,100 | 75,100 | 1,18,900 | .. | 15,700 | 44,500 | 5,46,800 |

| 5½ per cent | | | | 6 per cent | | | | | Debentures and Railway shares | Total | Name of officer to whom interest is sent |
|---|---|---|---|---|---|---|---|---|---|---|---|
| 1922 | 1923 | 1925 | 1928 | 1926 | 1927 | 1930 | 1931 | 1932 | | | |
| Rs | Rs | Rs | Rs | Rs | Rs | Rs | Rs | Rs | Rs | | |
| 100 | 1,100 | 5,000 | 7,73,250 | 1,47,000 | 1,100 | 17,12,300 | 6,61,100 | 3,69,400 | 2,01,100 | 1,14,13,050 | |
| | | | | | | | | | | 400 | Land Acquisition Judge |
| | | | | | | | | | | 500 | Ditto |
| | | | | | | | | | | 200 | Ditto |
| | | | | | | | | | | 1,000 | Ditto |
| | | | | | | | | | | 3,500 | Ditto |
| | | | | | | | | | | 600 | Ditto |
| | | | 14,200 | | | | | | | 14,200 | Ditto |
| | | | 13,200 | | | | | | | 13,200 | Ditto |
| | | | | | | | | | | 900 | Ditto |
| | | | | | | 7,100 | | | | 7,100 | Ditto |
| | | | | | | | | | | 500 | Ditto |
| | | | | | | | | | | 1,000 | Ditto |
| | | | | | | | | | | 6,800 | Ditto |
| | | | | | | | | | | 63,000 | Ditto |
| | | | | | | | | | | 1,900 | Ditto |
| | | | | | | | | | | 4,100 | Ditto |
| | | | | | | | | | | 2,500 | Ditto |
| | | | | | | | | | | 9,100 | Ditto |
| | | | | | | | | | | 200 | Ditto |
| | | | | | | | | | | 54,700 | Ditto |
| | | | | | | | | | | 200 | Ditto |
| | | | | | | | | | | 97,400 | Ditto |
| | | | | | | | | | | 2,800 | Ditto |
| | | | | | | | | | | 14,100 | Ditto |
| | | | | | | | | | | 1,200 | Ditto |
| | | | | | | | | | | 8,800 | Ditto |
| 100 | 1,100 | 5,000 | 68,650 | 1,47,000 | 51,100 | 17,19,700 | 6,61,100 | 3,69,400 | 2,01,000 | 1,17,25,250 | |

| Ledger Folio No | Name of Person or Fund on whose behalf held | 3½ PER CENT | | | | 3 per cent of 1896-77 | 4 PER CENT. | | 5 PER CENT | |
|---|---|---|---|---|---|---|---|---|---|---|
| | | 1842 43 | 1854-55 | 1865 | 1900-01 | | 1915-16 | 1916-17 | 1929 47 | 1945-55 |
| | | Rs. | Rs | Rs | Rs | Rs | Rs | Rs | Rs | Rs |
| | Brought forward | 12,600 | 59,400 | 69,33,100 | 75,100 | 1,18,900 | . | 15,700 | 44,500 | 5,46,800 |
| | PRESIDENCY DIVISION —*contd* | | | | | | | | | |
| | 24-PARGANAS —*contd* | | | | | | | | | |
| 3397 | L A case No 300 of 1919 (claimants P G W Shaw & Co ) . . | | | 3,100 | | | | . | | ... |
| 3398 | L A case No 301 of 1919 (claimant Asok Jiban Mukherji, minor, by his guardian Golap Sundari Devi) | | | 25,900 | | | | . | | ... |
| 3399 | L A case No 301 of 1919 (claimant Hemanta Kumar Mukherji, minor, by his guardian Hari Dassi Devi) . | | | 8,600 | .. | | | . | | |
| 3401 | L A case No 310 of 1919 | . | . | 18,300 | . | | | | | |
| 3402 | L A case No 313 of 1919 | .. | | 800 | | | | | | |
| 3402 | L A case No 315 of 1919 | . | | . | | | | . | | |
| 3403 | L A case No 325 of 1919 . | | | 3,300 | | | | .. | | . . |
| 3404 | L A case No 1 of 1920 . | .. | . | 400 | | | | . | | . |
| 3405 | L A case No 8 of 1920 | .. | | | | | ... | . | . | ... |
| 3409 | L A case No 46 of 1920 | | | 800 | | | . | | | |
| 3410 | L A case No 57 of 1920 | | | ... | . | . . | .. | .. | . | |
| 3411 | L. A case No 60 of 1920 (claimant Rahima Bibi Matwali) | .. | | . | | | . | | | |
| 3414 | L A case No 98 of 1920 | | | 400 | . | .. | | . | .. | |
| 3416 | L A case No. 101 of 1920 . | | . | 18,100 | | | . | | | . . |
| 3417 | L A case No 103 of 1920 . . | | .. | 3,500 | .. | . | . | . | .. | .. |
| 3419 | L A case No 106 of 1920 (claimant Chapala Bala Dasi) .. | ... | . | 9,100 | | | ... | .. | .. | . |
| 3420 | L A case No 108 of 1920 . | . | . . | 16,700 | . . | .. | .. | | ... | |
| 3421 | L A case No 109 of 1920 .. | .. | ... | 22,700 | . | ... | . . | ... | .. | ... |
| 3422 | L A case No 121 of 1920 | . | . | ... | ... | . | ... | .. | ... | .. |
| 3423 | L A case No 124 of 1920 ... | ... | .. | 32,900 | .. | | .. | .. | ... | ... |
| 3424 | L A case No 137 of 1920 . | ... | | 15,600 | . | ... | ... | ... | ... | .. |
| 3425 | L A case No 138 of 1920 | . | . . | 500 | . | | . | ... | ... | ... |
| 3428 | L A case No 149 of 1920 . | .. | . | 800 | .. | .. | . | ... | ... | ... |
| 3428 | L. A case No 150 of 1920 (claimant Haliman Bewa) ... | ... | ... | | .. | ... | ... | .. | . | ... |
| 3429 | L A case No 151 of 1920 (claimant Meherjan Bibi and others) ... . ... .. | .. | ... | .. | ... | . | ... | ... | ... | .. |
| 3434 | L A case No 158 of 1920 (claimant Musamat Marcha) .. | .. | | .. | .. | . | ... | ... | ... | ... |
| | Carried over ... | 12,600 | 59,400 | 71,09,300 | 75,100 | 1,18,900 | ... | 15,700 | 44,500 | 5,46,800 |

| 5½ PER CENT | | | | 6 PER CENT | | | | | Debentures and Railway shares | Total | Name of officer to whom interest is sent |
|---|---|---|---|---|---|---|---|---|---|---|---|
| 1922 | 1923. | 1925 | 1928 | 1926 | 1927 | 1930 | 1931 | 1932 | | | |
| Rs. | Rs | Rs. | Rs | Rs | Rs | Rs | Rs | Rs | Rs | Rs | |
| 100 | 1,100 | 5,000 | 7,63,650 | 1,47,000 | 51,100 | 17,19,700 | 6,61,100 | 3,69,400 | 2,01,000 | 1,17,95,250 | |
| . | .. | | | | | . | | | | 3,100 | Land Acquisition Judge |
| | | ... | . | | . | | | . | | 25,900 | Ditto |
| | | | | | | | | | | 8,600 | Ditto |
| | | | | | | | | | | 13,300 | Ditto |
| | | | .. | | | | | | | 300 | Ditto |
| | | | | | | | 1,900 | | | 1,900 | Ditto |
| | | | | | | . | | | | 3,200 | Ditto |
| | | .. | | . | | | .. | | | 400 | Ditto. |
| | . | | 800 | | | | | | . | 800 | Ditto |
| | | | . | | | | | | | 800 | Ditto |
| | | | . | 2,49,200 | . | | | | | 2,49,200 | Ditto |
| .. | | . | 20,800 | | | | | | | 20,800 | Ditto |
| | | | . | .. | | | | | | 400 | Ditto. |
| .. | | | | | | | | | | 18,400 | Ditto |
| . | . | | | | | | | | | 3,500 | Ditto |
| | | | . | . | | | | | | 9,100 | Ditto |
| . | . | | | | | 18,700 | | | | 16,700 | Ditto |
| . | .. | | | . | | | | | | 22,700 | Ditto |
| . | . | .. | . | | | | . | | | 18,700 | Ditto. |
| .. | . | | . | | | .. | | | | 32,900 | Ditto |
| .. | | | . | . | | . | | | | 15,600 | Ditto |
| .. | .. | . | | . | . | . | . | | | 500 | Ditto |
| . | | | | | | . | | | | 800 | Ditto |
| . | | . | . | | . | 3,400 | | | | 3,400 | Ditto |
| .. | ... | . | | | | 4,000 | | .. | | 4,000 | Ditto |
| . | | . | .. | | . | 500 | | . | | 500 | Ditto |
| 100 | 1,100 | 5,000 | 7,85,250 | 3,98,200 | 51,100 | 17,46,800 | 6,63,000 | 3,69,400 | 201,000 | 1,22,00,750 | |

| Ledger Folio No | Name of Person or Fund on whose behalf held | 3½ PER CENT | | | | 3 per cent of 1896 97. | 4 PER CENT | | 5 PER CENT | |
|---|---|---|---|---|---|---|---|---|---|---|
| | | 1842-43 | 1854-55 | 1865 | 1900-01 | | 1915-16 | 1916-17 | 1929-47 | 1945-55 |
| | | Rs | Rs | Rs | Rs | Rs | Rs | Rs | Rs | Rs. |
| | Brought forward .. | 12,600 | 59,400 | 71,09,300 | 75,100 | 1,18,900 | | 15,700 | 44,500 | 5,46,800 |
| | PRESIDENCY DIVISION —*contd* | | | | | | | | | |
| | 24-PARGANAS—*contd* | | | | | | | | | |
| 3426 | L A case No 172 of 1920 . | | | | | | | | | |
| 3429 | L A case No. 178 of 1920 . | . | | 200 | | | | | | |
| 3431 | L A case No 202 of 1920 | | | 14,900 | | | | | | |
| 3481 | L A case No 209 of 1920 | | | | | | | | | |
| 3482 | L A case No 210 of 1920 | | | 2,800 | | | | | | |
| 3482 | L A case No 211 of 1920 .. | | | | . | | | | | |
| 3482 | L A case No 216 of 1920 .. | | | | | | | | | |
| 3483 | L A case No 218 of 1920 . | | | | | | | | | |
| 3483 | L A case No 229 of 1920 .. | | | | | | | | | |
| 3422 | L A case No 154 of 1920 (claimant Shaik Ismail Daftry) . | | | | . | | | | | |
| 3426 | L A case No 161 of 1920 (claimant Nawabjan) . . | | | | | | | | | |
| 3429 | L A case No 163 of 1920 (claiment Jummon Mea) | | | | | | | | | |
| 3430 | L A. case No 162 of 1920 claimant Shaik Fulchand) | | | | | | | | | |
| 3431 | L A case No 168 of 1920 (claiment Arjoo Bewa) . | | | | | | | | | |
| 3432 | L A case No 169 of 1920 (claimant Ram Das Teli and others) ... | | | | | | | | | |
| 3433 | L A case No 189 of 1920 (claimant Kasimannessa Bibi, executrix to the Estate of Meher Ali) .. . | | | | | | | | | |
| 3434 | L A case No 192 of 1920 (claimant Lachmani Dasi, administratrix to the estate of Brojo Nath Singh) . . | | | | | | | | | |
| 3434 | L A case No 192 of 1920 (claimant Shaikh Nawabjan) | | | | . | | . | | . | |
| 3434 | L A case No 186 of 1920 (claimant Ismail Duftry) | | | | | | | | | . |
| 3435 | L A case No 187 of 1920 (claimant Shaikh Chikur) | . | | | | | | . | | |
| 3436 | L A Case No 188 of 1920 (claimant Shaikh Samir) .. | | | | | . | | | | |
| 3437 | L A case No 190 of 1920 (claimant Shaikh Habibar Rahaman and others) .. | | | | | | | | . | |
| 3437 | L A case No 190 of 1920 (claimant Muhamad Sah and others) . . | | | | | . | . | | | |
| 3438 | L A case No 277 of 1920 | | | | . | | | | | . |
| 3472 | L A case No 7 of 1921 | | | | | | | | | . |
| 3473 | L A. case No 17 of 1921 . | | | | . | | . | | | |
| 3138 | L A case No 28 of 1921 (claimant Manabendra Nath Bose and others) ... .. ... | | . | . | | . | . | | | |
| 3474 | L. A case No 29 of 1921 ... | | | . | . | | | | | |
| 3146 | L. A case No 30 of 1921 . | | | . | | . | . | . | .. | . |
| 3150 | L A case No. 34 of 1921 . | | .. | | | . | . | .. | | . |
| 3152 | L. A. case No 36 of 1921 ... | | | | . | . | . | | . | .. |
| 3153 | L A. case No 37 of 1921 .. | .. | | .. | . | . | .. | . | | .. |
| 3477 | L A. case No 46 of 1921 ... | ... | .. | | ... | .. | .. | | ... | ... |
| 3478 | L. A case No 47 of 1921 ... | . | .. | ... | . | . | . | . | ... | . |
| | Carried over ... | 12,600 | 59,400 | 71,27,200 | 75,100 | 1,18,900 | ... | 15,700 | 44,500 | 5,46,800 |

| 5½ per cent | | | | 6 per cent | | | | | Debentures and Railway shares | Total | Name of officer to whom interest is sent |
|---|---|---|---|---|---|---|---|---|---|---|---|
| 1922 | 1923 | 1925 | 1928 | 1926 | 1927 | 1930 | 1931 | 1932 | | | |
| Rs | Rs | Rs | Rs | Rs | Rs | Rs | Rs | Rs | Rs | Rs | |
| 100 | 1,100 | 5,000 | 7,95,250 | 3,96,200 | 51,100 | 17,46,300 | 6,63,000 | 3,69,400 | 2,01,000 | 1,22,00,750 | |
| | . | . | | | | . | 2,200 | | . | 2,200 | Land Acquisition Judge |
| | | | | | | . | | | | 200 | Ditto |
| | | | . | | | . | | | | 14,900 | Ditto |
| . | | | | . | | . | 400 | | | 400 | Ditto |
| . | | | . | | | . | | | | 2,800 | Ditto |
| | | | . | | | 8,300 | 1 | | | 8,300 | Ditto |
| | | | | | | . | 400 | . | | 400 | Ditto |
| .. | | | | | | 100 | ... | | | 100 | Ditto |
| .. | | | | | | | 1,100 | | | 1,100 | Ditto |
| | | | | | | 200 | | | | 200 | Ditto |
| | . | | | | | . | 2,200 | | | 2,200 | Ditto |
| | | | | | | | 500 | | | 500 | Ditto |
| | . | | | | | | 500 | | | 500 | Ditto |
| | | | | | | | 400 | | | 400 | Ditto |
| | | . | | | | ... | 900 | | | 900 | Ditto |
| | | | | | | | 1 600 | | | 1,600 | Ditto |
| | . | | | | | | 5,400 | | | 5,400 | Ditto |
| | | | | | | | 2,700 | . | | 2,700 | Ditto |
| | | .. | | | | .. | 1,000 | . | | 1,000 | Ditto |
| | | | | | | | 100 | | . | 100 | Ditto |
| | | | | | | | 500 | | .. | 500 | Ditto |
| | | | | | | | 1,800 | | | 1,800 | Ditto |
| | | | | . | . | | 1,100 | | | 1,100 | Ditto |
| .. | | .. | .. | . | .. | . | 4,900 | . | | 4,900 | Ditto |
| | ... | | | | . | 3,500 | | . | | 3,500 | Ditto |
| | | | . | | | 7,800 | | | . | 7,800 | Ditto |
| . | . | . | | 86,000 | | . | | | | 85,000 | Ditto |
| ... | ... | . | ... | | . | | 600 | | | 600 | Ditto |
| ... | .. | ... | ... | . | ... | 100 | . | . | .. | 100 | Ditto |
| . | .. | .. | . | | | 27,400 | | . | | 27,400 | Ditto |
| .. | | . | | .. | | 24,100 | | | | 24,100 | Ditto |
| .. | .. | .. | ... | | . | 22,700 | | | | 22,700 | Ditto |
| ... | .. | ... | ... | . | . | .. | 6,900 | | | 6,900 | Ditto |
| . | ... | ... | .. | . | .. | .. | 2,100 | .. | | 2,100 | Ditto |
| 100 | 1,100 | 5,000 | 7,95,250 | 4,82,200 | 51,100 | 18,40,500 | 7,00,300 | 3,69,400 | 2,01,000 | 1,24,35,150 | |

| Ledger Folio No | Name of Person or Fund on whose behalf held | 3½ PER CENT | | | | 3 per cent of 1896-97 | 4 PER CENT | | 5 PER CENT | |
|---|---|---|---|---|---|---|---|---|---|---|
| | | 1842-43 | 1854-55 | 1865 | 1900 01 | | 1915-16 | 1916-17 | 1929-47 | 1945-55 |
| | | Rs | Rs | Rs | Rs | Rs | Rs | Rs | Rs | Rs |
| | Brought forward | 12,600 | 59,400 | 71,27,200 | 75,100 | 1,18,900 | | 15,700 | 44,500 | 5,46,800 |
| | PRESIDENCY DIVISION—*contd* | | | | | | | | | |
| | 24 PARGANAS—*contd* | | | | | | | | | |
| 3165 | L A case No 51 of 1921 | | | | .. | . | | .. | ... | . |
| 3167 | L A case No 53 of 1921 | | | | | | . | . | .. | ... |
| 3169 | L A. case No 55 of 1921 | | | | | | | | | ... |
| 3173 | L A case No 59 of 1921 | | | | | | | | | ... |
| 3174 | L A case No 60 of 1921 | | | | | | | | | .. |
| 3175 | L A case No 71 of 1921 | | | | . | | . | | . | . |
| 3176 | L A case No 74 of 1921 | | | | | | | | | . |
| 3176 | L A case No 79 of 1921 | | | | | | | | | |
| 3181 | L A case No 122 of 1921 | | | | | | | | | |
| 3183 | L A case No 123 of 1921 | | | | | | | | | |
| 3182 | L A case No 194 of 1921 | | | | | | | | | |
| 3183 | L A case No 199 of 1921 | | | | | | | | | |
| 3183 | L A case No 210 of 1921 | | | | | | | | | |
| 3186 | L A case No 269 of 1921 | | | | | | | | | |
| 3187 | L A case No 270 of 1921 | | | | | | | | | |
| 3184 | L A case No 64 of 1922 | | | | | | | | | |
| 3185 | L A case No 110 of 1922 | | | | | | | | | |
| 3185 | L A case No 127 of 1922 | | | | | | | | . | |
| 3436 | Act V case No 38 of 1907 | | | 900 | | | | | | |
| 3435 | Act V case No 25 of 1911 | | | 12,300 | | | | | | |
| 3438 | Act V case No 55 of 1919 | | | | | | | | | |
| 3440 | Act VIII case No 106 of 1898 | | | 100 | | | | | | |
| 3442 | Act VIII case No 25 of 1907 | | | 500 | | | | | | |
| 3443 | Act VIII case No 233 of 1908 | | | 1,500 | . | | | | | . |
| 3444 | Act VIII case No 109 of 1909 | | | 900 | | | | | | |
| 3445 | Act VIII case No 164 of 1909 | | | 500 | | | ... | . | | . |
| 3447 | Act VIII case No 231 of 1910 | | | 100 | | | | . | . | .. |
| 3449 | Act VIII case No 281 of 1911 | . | | | | | | | . | . |
| 3450 | Act VIII case No 216 of 1912 | | | 1,000 | | | . | | | . |
| 3451 | Act VIII case No 282 of 1912 | | | 300 | | | | | . | |
| 3452 | Act VIII case No 80 of 1913 | | | | | | | 900 | ... | |
| 3454 | Act VIII case No 164 of 1913 | | | 1,000 | . | . | | .. | | |
| 3455 | Act VIII case No 427 of 1914 | | . | . | | | | | .. | |
| 3456 | Act VIII case No 105 of 1915 | | | 10,000 | | | | | . | |
| 3457 | Act VIII case No 2 of 1916 | | | 3,300 | | | | | .. | |
| 3458 | Act VIII case No 96 of 1916 | | | 500 | | | | | . | |
| 3459 | Act VIII case No 388 of 1916 | | . | | .. | | | | ... | .. |
| 3461 | Act VIII case No 239 of 1917 | | | | . | .. | ... | . | ... | . |
| 3462 | Act VIII case No 126 of 1918 | . | | . | | | .. | ... | ... | 100 |
| 3464 | Act VIII case No. 399 of 1918 | . | .. | | .. | ... | .. | ... | .. | 500 |
| 3466 | Act VIII case No 449 of 1919 | . | .. | ... | .. | ... | ... | ... | ... | ... |
| | Carried over ... | 12,600 | 59,400 | 71,60,900 | 75,100 | 1,18,900 | ... | 16,600 | 44,500 | 5,47,400 |

| 5½ PER CENT | | | | 6 PER CENT | | | | | Debentures and Railway shares | Total | Name of officer to whom interest is sent |
|---|---|---|---|---|---|---|---|---|---|---|---|
| 1922 | 1923. | 1925 | 1928 | 1926 | 1927 | 1930 | 1931 | 1932 | | | |
| Rs. | Rs. | Rs | Rs | Rs | Rs | Rs | Rs | Rs | Rs | | |
| 100 | 1,100 | 5,000 | 7,95,250 | 4,82,200 | 51,100 | 18,40,500 | 7,00,300 | 3,69,400 | 2,01,000 | 1,21,[illegible],[illegible]0 | |
| | | | | | | 200 | | | | 200 | Land Acquisition Judge, 24-Parganas |
| | | | | | | 200 | | | | 200 | Ditto |
| | | | | | | 1,000 | | | | 1,000 | Ditto |
| | | | | | | 500 | | | | 500 | Ditto |
| | | | | | | 59,200 | | | | 59,200 | Ditto |
| | | | | | | | 100 | | | 100 | Ditto |
| | | | | | | | 100 | | | 100 | Ditto |
| | | | | | | | 16,000 | | | 16,000 | Ditto |
| | | | | | | | 16,800 | | | 16,800 | Ditto |
| | | | | | | | 32,300 | | | 32,300 | Ditto |
| | | | | | | | 1,000 | | | 1,000 | Ditto |
| | | | | | | | | | 3,000 | 3,000 | Ditto |
| | | | | | | | 2,700 | | | 2,700 | Ditto |
| | | | | | | | 500 | | | 500 | Ditto |
| | | | | | | | 400 | | | 400 | Ditto |
| | | | | | | | 2,100 | | | 2,100 | Ditto |
| | | | | | | | 2,800 | | | 2,800 | Ditto |
| | | | | | | | 700 | | | 700 | Ditto |
| | | | | | | | | | | 900 | District Judge, 24-Parganas |
| | | | | | | | | | | 12,300 | Ditto |
| | | | | | | 1,000 | | | | 1,000 | Ditto |
| | | | | | | | | | | 100 | Ditto |
| | | | | | | | | | | 500 | Ditto |
| | | | | | | | | | | 1,500 | Ditto |
| | | | | | | | | | | 900 | Ditto |
| | | | | | | | | | | 500 | Ditto |
| | | | | | | | | | | 100 | Ditto |
| | | | | | | 7,900 | | | | 7,900 | Ditto |
| | | | | | | | | | | 1,000 | Ditto |
| | | | | | | | | | | 300 | Ditto |
| | | | | | | | | | | 900 | Ditto |
| | | | | | | | | | | 1,000 | Ditto |
| | | | | | | 8,500 | | | | 8,500 | Ditto |
| | | | | | | | | | | 10,000 | Ditto |
| | | | | | | | | | | 3,800 | Ditto |
| | | | | | | | | | | 500 | Ditto |
| | | | 2,500 | | | | | | | 2,500 | Ditto |
| | | | | | | 2,400 | | | | 2,400 | Ditto |
| | | | | | | | | | | 100 | Ditto |
| | | | | | | 500 | | 100 | | 1,100 | Ditto |
| | | | | | | 10,000 | | | | 10,000 | Ditto. |
| 100 | 1,100 | 5,000 | 7,97,750 | 4,82,200 | 51,100 | 19,81,700 | 7,75,800 | 3,69,500 | 2,04,000 | 1,26,42,[illegible]0 | |

| Ledger Folio No | Name or Person of Fund on whose behalf held | 3½ PER CENT | | | | 3 per cent of 1896-97 | 4 PER CENT | | 5 PER CENT | |
|---|---|---|---|---|---|---|---|---|---|---|
| | | 1842-43 | 1854-55 | 1865 | 1900-01 | | 1915-16. | 1916-17 | 1929-47. | 1945-55 |
| | | Rs | Rs | Rs | Rs | Rs | Rs | Rs | Rs | Rs |
| | Brought forward | 12,600 | 59,400 | 71,60,100 | 75,100 | 1,18,300 | | 16,600 | 44,500 | 5,47,400 |
| | PRESIDENCY DIVISION—*contd* | | | | | | | | | |
| | 24-PARGANAS—*contd* | | | | | | | | | |
| 3467 | Act VIII case No 194 of 1920 | | | | | | | | | |
| 3469 | Act XXXV case No 82 1906 .. | | | 1,000 | | | | | | .. |
| 3470 | Execution case No 53 of 1911 | . | | 400 | | | | . | | |
| 3472 | Miscellaneous case No 43 of 1920 .. . .. | | | | | | | | | .. |
| 3474 | Lalit Mohan Sarkar, Cashier, Sealdah Small Cause Court | | | 1,000 | | | | | | . |
| 3475 | Nandalal Pal, Nazir, Barrupur Munsifi . | | | 1,000 | | | | .. | . | .. |
| 3476 | Sasi Kamal Sen, Nazir ... | . | | 2,500 | | | . | .. | | .. |
| 3477 | Jogananda Mukherjee, Nazir, Baraset Munsifi | | | 1,000 | . | | | | | . |
| 3478 | Chandra Shekhar Chatterji, Nazir, Sealdah Munsifi . | | | 1,000 | | | | | | |
| 3479 | Srish Chandra Ghosh, Naib Nazir . | . . | | 500 | | . | | | | . |
| 3480 | Karuna Kanta Sarkar, Naib Nazir .. .. | | | 500 | | | | | | |
| 3480 | Ramesh Chandra Roy, Cashier, Small Cause Court, Sealdah | | | | 1,000 | | | | | |
| 3481 | Mansa Charan Chakrabartty, Assistant Nazir . . | . | | 500 | . | | | . | | . |
| 3499 | District School Committee | | | 4,000 | | | | | | . |
| 3500 | Aghore Mohini Fund | | | 2,500 | . | 1,500 | .. | . | | ... |
| 3501 | Dwarkanath Bidyabhushan Fund .. . . | | | 300 | | | .. | | . | .. |
| 3502 | Chandra Nath Ray Sapuri's Gold Medal Fund .. | . | | | | 1,100 | . | | | |
| 3508 | Narain Chandra Bhattacharjee, Bailiff .. . ... . | | . | 200 | | | . | . | . | |
| 3507 | Cossipore-Chitpur Municipality | | | . | | | .. | | | . |
| 3509 | Annada Charan Bhattacharjee, Bank Sircar . . | | | 300 | | 700 | | | | . |
| 3510 | Kedar Nath Ghose, Collecting Sircar .. .. .. .. | . | | 200 | | . | | . | | . |
| 3512 | Jogendra Nath Ghosal, Head Clerk and Accountant . | | | . | | 500 | . | ... | . | ... |
| 3513 | Jogendra Nath Bose, Collecting Sircar . . .. | | | 200 | | | | . | . | ... |
| 3514 | Gobindra Chandra Chatterjee, Collecting Sircar .. | | | 200 | | . | . | .. | ... | ... |
| 3516 | Kali Tancy Mukerji, Collecting Sircar .. .. . | | | 200 | 200 | . | | . | ... | .. |
| 3517 | Behari Lal Das, Collecting Sircar . .. ... . | | . | 200 | | .. | .. | . | ... | ... |
| 3518 | Surendra Nath De, Assistant Licence Officer .. .. . | | | 500 | .. | . | . | .. | ... | ... |
| 3521 | Ishan Chandra Sarkar, Collecting Sircar ... ... ... | . | | 200 | . | . | . | . | . | .. |
| 3522 | Hari Das Banerjee Store-keeper | . | | 200 | . | .. | | .. | . | .. |
| 3523 | Srinibas Das, Assistant Accountant .. ... ... | . | .. | 300 | ... | 200 | ... | | ... | ... |
| | Carried over ... | 12,600 | 59,400 | 71,81,000 | 76,300 | 1,22,900 | .. | 16,600 | 44,500 | 5,57,400 |

| 5½ PER CENT. | | | | 6 PER CENT | | | | | Debentures and Railway shares | Total | Name of officer to whom interest is sent |
|---|---|---|---|---|---|---|---|---|---|---|---|
| 1922 | 1923 | 1925 | 1928 | 1926 | 1927 | 1930 | 1931 | 1932 | | | |
| Rs | Rs | Rs | Rs | Rs | Rs. | Rs | Rs | Rs. | Rs | Rs | |
| 100 | 1,100 | 5,000 | 7,87,750 | 4,82,200 | 51,100 | 19,31,700 | 7,75,800 | 3,69,500 | 2,04,000 | 1,26,42,850 | |
| . | . | .. | . | . | | 3,500 | | . | | 3,500 | District Judge, 24 Parganas |
| .. | .. | . | | .. | | . | . | | | 1,000 | Ditto |
| ... | ... | | | | | | | | | 400 | Ditto |
| . | | | 30,000 | . | | | .. | | | 30,000 | Ditto |
| . | | .. | | . | .. | | | . | | 1,000 | Ditto |
| . | ... | .. | .. | .. | .. | | . | . | | 1,000 | Ditto |
| | . | | .. | . | .. | .. | | .. | | 2,500 | Ditto |
| | . | .. | | ... | | . | | | | 1,000 | Ditto |
| .. | . | | .. | | .. | | | | | 1,000 | Ditto |
| . | .. | . | .. | | . | | | | | 500 | Ditto |
| | | | .. | .. | | | ... | | | 500 | Ditto |
| . | | .. | . | ... | ... | | . | | | 1,000 | Ditto |
| . | . | ... | | ... | | | .. | ... | . | 500 | Ditto |
| | | | | . | . | . | . | . | | 4,000 | Magistrate |
| | | | . | ... | | ... | | | | 4,000 | Ditto |
| | | .. | . | .. | . | . | . | . | | 300 | Ditto |
| . | | .. | | . | .. | ... | .. | | | 1,100 | Ditto |
| | | | .. | . | .. | .. | .. | | | 200 | Chairman, Cossipore-Chitpur Municipality |
| | | | | | | | 1,00,000 | 5,000 | | 1,05,000 | Ditto |
| | | | | | | | | | | 1,000 | Ditto |
| . | | . | | | | | | | | 200 | Ditto |
| | | | | | | . | . | | | 500 | Ditto |
| .. | | | | . | | | | | | 200 | Ditto |
| | . | . | | | . | | | | | 200 | Ditto |
| ... | .. | .. | | . | .. | | | | .. | 400 | Ditto |
| ... | .. | .. | | | . | .. | | | | 200 | Ditto |
| .. | . | . | .. | . | .. | . | | | . | 500 | Ditto |
| . | .. | . | . | | . | .. | .. | .. | .. | 200 | Ditto |
| . | ... | ... | .. | | .. | .. | ... | . | .. | 200 | Ditto |
| ... | ... | . | ... | ... | ... | 6,000 | . | .. | . | 6,500 | Ditto |
| 100 | 1,100 | 5,000 | 8,17,750 | 4,82,200 | 51,100 | 19,41,200 | 8,75,800 | 3,74,500 | 2,04,000 | 1,28,11,150 | |

| Ledger Folio No | Name of Person or Fund on whose behalf held | 3½ PER CENT | | | | 3 per cent of 1896-97 | 4 PER CENT | | 5 PER CENT | |
|---|---|---|---|---|---|---|---|---|---|---|
| | | 1842-43 | 1854-55 | 1865 | 1900-01 | | 1915-16 | 1916-17 | 1929-47 | 1945-55 |
| | | Rs | Rs | Rs | Rs | Rs | Rs | Rs | Rs | Rs |
| | Brought forward .. | 12,600 | 59,400 | 71,79,000 | 76,300 | 1,22,900 | | 16,600 | 44,500 | 5,47,100 |
| | PRESIDENCY DIVISION—*contd* | | | | | | | | | |
| | 24-PARGANAS—*concld* | | | | | | | | | |
| 3524 | Brindaban Chandra Chatterjee, Cashier . . | | | 1,800 | 700 | . | . | | | . |
| 3525 | Manik Lal Ghose, Assistant Collector . | .. | | 500 | | | | | | |
| 3526 | Akshay Kumar Chatterjee, Assessor ... . | . | | 1,000 | | | | | | |
| 3527 | Keshab Chandra Banerji, Collecting Sirkar ... | | | | 200 | | | . | . | .. |
| 3528 | Sudhansumoy Chatterjee, Licence officer . .. | | 500 | . | | | . | | | |
| 3528 | Surendra Nath Nandi, Collecting Sircar . . . | . | | | | 400 | | . | | . |
| 3529 | Upendra Nath Das, Collecting Sircar . . . ... | | | | 200 | | | | . | |
| 3529 | Atul Krishna Das, Collecting Sircar . . . | | 200 | | | | | | | . |
| 3535 | Narain Chandra Banerjee, Tax Daroga . . | . | | 1,000 | | | | | | |
| 3536 | Satish Chandra Bose, Collecting Sircar . | | | | | 200 | | . | | |
| 3537 | Upendra Nath Chakrabarty, Collecting Sircar .. . | . | | | | 200 | . | | | |
| 3538 | Janaki Jiban Sanyal, Collecting Sircar . . | | | | | 200 | | | | |
| 3540 | Suchit Ranjan Roy | | | . | 1,000 | | | | .. | . |
| 3541 | Rajendra Nath Banerji, Tax Daroga . . ... . | | 500 | | . | | . | . | | |
| 3542 | Debendra Nath Patra, Tax Daroga . | | .. | ... | | 200 | | .. | .. | . |
| 3543 | Panihati Municipality | .. | | | 100 | ... | | . | . | ... |
| 3544 | *Zoological Garden* . ... | . | . | 6,800 | . | . | | . | . | . |
| 3546 | Shaik Noor Muhomed, Tax Daroga ... ... . | | ... | 500 | .. | .. | .. | ... | . | |
| 3547 | Upendra Nath Ghose, Tax Daroga .. . | | | | | 1,000 | .. | | . | .. |
| 3549 | Satis Chandra Ghose, Accountant ... ... .. | .. | ... | 500 | .. | . | . | ... | . | .. |
| 3551 | H C M Upshon, Chief European Warder ... .. . | | | 800 | . | | ... | ... | ... | ... |
| 3552 | H Green, European Warder . | .. | .. | 800 | . | | . | | ... | ... |
| 3553 | A. T Ryan, Chief European Warder ... . .. | . | .. | 700 | ... | .. | . | . | ... | .. |
| 3554 | Hari Mohan Kumar, Storekeeper, Presidency Jail ... | ... | . | ... | 500 | ... | ... | ... | ... | ... |
| 3555 | Becharam Mitra, Accountant, Presidency Jail .. . ... | .. | ... | 500 | .. | ... | ... | . | ... | .. |
| 3556 | Satis Chandra Chatterji, Assistant Accountant Presidency Jail .. ... ... ... | ... | . | 800 | ... | .. | .. | ... | .. | .. |
| 3557 | Rajnarayan Sarnakar, Draftsman, Presidency Jail ... ... | ... | ... | 800 | ... | ... | ... | ... | . | ... |
| 3558 | Suresh Chandra Banerji, Assistant Store keeper, Presidency Jail ... ... ... ... | ... | ... | 800 | ... | ... | ... | ... | ... | ... |
| 3562 | Hari Dasi Dasi (In Suit No 81 of 1918) ... .. ... | ... | ... | 4,200 | ... | ... | ... | ... | ... | ... |
| | Carried over .. | 12,600 | 60,300 | 71,99,000 | 79,000 | 1,25,100 | ... | 16,600 | 44,500 | 5,47,400 |

| 5½ per cent | | | | 6 per cent | | | | | Debentures and Railway shares | Total | Name of officer to whom interest is sent |
|---|---|---|---|---|---|---|---|---|---|---|---|
| 1922. | 1923 | 1924 | 1928 | 1926 | 1927 | 1930 | 1931 | 1932. | | | |
| Rs | Rs | Rs | Rs | Rs | Rs | Rs | Rs | Rs | Rs | Rs | |
| 100 | 1,100 | 5,000 | 8,17,750 | 4,82,200 | 51,100 | 19,41,200 | 3,75,800 | 3,74,500 | 2,04,000 | 1,28,11,450 | |
| | . | . | ... | . | . | . | ... | | 500 | 3,000 | Chairman, Cossipore Chitpur Municipality |
| | | .. | .. | . | . | . | . | . | . | 500 | Ditto |
| | | | | | | | | | . | 1,000 | Ditto |
| ... | | | . | | . | | | | | 200 | Ditto |
| | ... | | | | | . | . | . | | 500 | Ditto |
| . | . | ... | | | . | . | | | | 400 | Ditto |
| | . | . | | . | . | | . | . | | 200 | Ditto |
| .. | . | .. | | | . | | . | | . | 200 | Ditto |
| .. | .. | | | | | | | .. | .. | 1,000 | Chairman, Baranagar Municipality |
| . | | | | | | | . | | | 200 | Ditto |
| | | . | | | | | | | | 200 | Ditto |
| | | | . | | | | | . | | 200 | Ditto |
| .. | | | . | | | . | | . | .. | 1,000 | Chairman, Rajpur Municipality |
| | .. | | | | | | | | | 500 | Ditto |
| .. | . | . | | .. | | | | | . | 200 | Chairman, Garulia Municipality |
| .. | ... | | ... | | | | | .. | | 100 | Chairman, Panihati Municipality |
| . | | | | | | . | . | | | 6,800 | Secretary, Zoological Gardens |
| | | | | . | | | | | | 500 | Secretary, Cantonment Committee, Barrackpore |
| . | . | | | | | | | | | | |
| .. | .. | | | ... | | | | . | .. | 1,000 | Ditto. |
| .. | | . | | | .. | | . | | | 500 | Superintendent of Police |
| ... | .. | | | . | . | | . | | | 800 | Inspector General of Prisons, Bengal |
| .. | | | | . | | .. | | .. | | 800 | Ditto |
| .. | | | .. | .. | ... | .. | .. | . | . | 700 | Ditto. |
| ... | .. | .. | .. | .. | ... | ... | .. | ... | | 500 | Ditto |
| ... | . | | .. | . | | ... | | | | 500 | Ditto |
| ... | ... | .. | .. | .. | .. | ... | .. | ... | .. | 300 | Ditto |
| ... | ... | . | . | ... | ... | .. | . | | .. | 300 | Ditto |
| .. | ... | ... | ... | ... | .. | ... | | | . | 300 | Ditto |
| .. | .. | ... | ... | ... | | .. | . | ... | . | 4,200 | Sub-Judge |
| 100 | 1,100 | 5,000 | 8,17,750 | 4,82,200 | 51,100 | 19,41,200 | 3,75,800 | 3,74,500 | 2,04,500 | 1,28,38,050 | |

| Ledger Folio No | Name of Person or Fund on whose behalf held | 3½ per cent | | | | 3 per cent of 1896-97 | 4 per cent | | 5 per cent. | |
|---|---|---|---|---|---|---|---|---|---|---|
| | | 1842-43 | 1854-55 | 1865 | 1900-01 | | 1915-16 | 1916-17 | 1922-47 | 1945-55 |
| | | Rs | Rs | Rs | Rs | Rs | Rs | Rs | Rs | Rs |
| | Brought forward | 12,600 | 60,600 | 71,99,000 | 79,900 | 1,25,100 | | 16,600 | 44,500 | 5,47,400 |
| | PRESIDENCY DIVISION — *contd* | | | | | | | | | |
| | KHULNA | | | | | | | | | |
| 3556 | Gopal Chandra Nag, Treasurer | | | | 10,000 | | | | | . |
| 3566 | Monoranjan Mukerjee, Nath, Chandkhali ... | | | | | 1,700 | | | | |
| 3567 | Sasadhar Chakraburty, Nazir, Satkhira Subdivisional Office | . | | 500 | | | | | . | . |
| 3568 | Kumari Satya Priya Ghosal, ward of Bhukailas Estate | | | 1,200 | | | | | | |
| 3569 | Kumar Satyandhi Ghosal, for protection of his estate from sale . | | | 3,000 | | | | | . | |
| 3570 | Rajendra Kumar Ghose, Patnidar, Syedpur Trust Estate | | | 1,000 | | 1,200 | . | . | . | . |
| 3571 | Bhupendra Nath Chakravarty, Patnidar .. .. | | .. | | . | 100 | . | | .. | |
| 3572 | Ramesh Chandra Bose, Patnidar | .. | .. | 100 | . | . | . | .. | ... | |
| 3573 | Satish Chandra Dev Ray, for payment of rent | | . | 500 | . | . | . | | .. | .. |
| 3574 | Syedpur Trust Estate | | | 11,900 | .. | . | | .. | . | |
| 3575 | Soudamini Dasi, for payment of rent ... . ... .. | .. | ... | . | .. | 800 | .. | . | | .. |
| 3577 | Hari Das Daw, Patnidar, Syedpur Trust Estate ... . | .. | . | 4,200 | ... | .. | .. | . | ... | .. |
| 3578 | Mahendra Nath Dhar, Settlement-holder, Syedpur Trust Estate ... ... ... .. | . | . | .. | .. | 200 | . | . | .. | .. |
| 3580 | Trailokhya Nath Biswas Patni-holder, Syedpur Trust Estate | .. | . | 1,800 | | . | ... | | . | . |
| 3581 | Birendra Chandra Ghosh, Patni holder Syedpur Trust Estate | | | 200 | . | . | .. | | .. | . |
| 3582 | Shiba Prasad Banerji, Settlement-holder ... ... . | | | 500 | ... | ... | . | .. | ... | .. |
| 3583 | Gadadhar Ghose, Settlement-holder . . ... | | . | 100 | .. | | . | . | . | .. |
| 3584 | Raja Promotho Bhushan Deb Rai, Patni-holder . . | | . | 500 | . | . | | . | | . |
| 3585 | Satkari Mitra, for payment of rent .. .. ... .. | | | 1,000 | . | . | | .. | . | ... |
| 3586 | Labonyaprobha Datt, Settlement holder . | | | 500 | . | .. | . | .. | | |
| 3587 | Mohendra Kumar Mitra Patnidar ... ... | | | .. | | 200 | .. | . | ... | .. |
| 3588 | Basanta Kumar Mitra, for payment of rent . .. .. | . | | 500 | | | .. | . | .. | . |
| 3589 | Bepin Bihari Saha, for payment of rent ... ... .. . | | | | . | 500 | . | .. | .. | ... |
| 3590 | Girindra Bhushan Chatterji, Manager, Syedpur Trust Estate . . ... ... | | | 1,000 | . | | .. | . | | . |
| 3591 | Bijoy Lal Ray Chaudhuri, Izaradar, Syedpur ... ... . | .. | | | 600 | | . | ... | .. | |
| 3592 | Jessore Banking and Trading Company, Settlement-holders, under Syedpur Trust Estate | .. | .. | 800 | . | .. | ... | ... | .. | .. |
| | Carried over ... | 12,600 | 60,600 | 72,28,100 | 89,600 | 1,29,300 | ... | 16,600 | 44,500 | 5,47,400 |

| 5½ PER CENT | | | | 6 PER CENT | | | | | Debentures and Railway shares | Total. | Name of officer to whom interest is sent |
|---|---|---|---|---|---|---|---|---|---|---|---|
| 1922 | 1923 | 1925 | 1928. | 1926 | 1927 | 1930 | 1931 | 1932 | | | |
| Rs | Rs | Rs | Rs | Rs | Rs | Rs | Rs | Rs | Rs | Rs | |
| 100 | 1,100 | 5,000 | 8,17,750 | 4,82,200 | 51,100 | 19,41,200 | 8,75,800 | 3,74,500 | 2,04,500 | 1,28,81,250 | |
| . | | | .. | | | | | | . | 10,000 | Collector |
| | | | | | . | | | . | | 1,700 | Ditto |
| | . | | | | | | | . | | 500 | Ditto |
| | | | . | | . | . | | | | 1,200 | Ditto |
| | | | | | | | | | | 3,000 | Ditto |
| | | | | | | | | | . | 2,200 | Ditto |
| | . | | | | . | | | | | 100 | Ditto |
| | | . | | | | | | . | | 400 | Ditto |
| .. | | | | . | . | .. | | | | 500 | Ditto |
| | | | | | . | | | | | 11,900 | Ditto |
| ... | . | .. | ... | .. | . | | . | .. | . | 300 | Ditto |
| ... | .. | . | .. | . | | ... | .. | .. | . | 4,200 | Ditto |
| . | . | ... | ... | . | | ... | | .. | . | 200 | Ditto |
| .. | . | ... | | ... | .. | ... | . | . | | 1,800 | Ditto |
| | . | | . | .. | | . | | | | 200 | Ditto |
| | . | | | | | | .. | . | | 500 | Ditto |
| | | | | | | | | . | | 100 | Ditto. |
| . | | | . | | | . | | | | 500 | Ditto |
| | | | . | | | . | | | . | 1,000 | Ditto |
| | | | | | .. | | | ... | | 500 | Ditto |
| | | | . | . | | ... | | . | | 200 | Ditto |
| . | | . | | .. | ... | . | . | .. | .. | 500 | Ditto |
| ... | . | | | | .. | .. | .. | .. | . | 500 | Ditto. |
| . | ... | .. | | .. | . | | .. | .. | . | 1,000 | Ditto |
| . | | . | | | | .. | | | | 600 | Ditto |
| .. | | .. | . | | . | . | | | | 300 | Ditto |
| 100 | 1,100 | 5,000 | 8,17,750 | 4,82,200 | 51,100 | 19,41,200 | 8,75,800 | 3,74,500 | 2,04,500 | 1,28,81,950 | |

| Ledger folio No | Name of Person or Fund on whose behalf held | 3½ PER CENT | | | | 3 per cent of 1896-97 | 4 PER CENT | | 5 PER CENT | |
|---|---|---|---|---|---|---|---|---|---|---|
| | | 1842-43 | 1854-55 | 1865 | 1900-01 | | 1915-16 | 1916-17 | 1929-47 | 1945-55 |
| | | Rs | Rs | Rs | Rs | Rs | Rs | Rs | Rs | Rs |
| | Brought forward | 12,600 | 60,600 | 72,28,100 | 89,600 | 1,29,800 | ... | 16,600 | 44,500 | 5,47,400 |
| | PRESIDENCY DIVISION—*contd* | | | | | | | | | |
| | KHULNA—*concld* | | | | | | | | | |
| 3593 | Girija Nath and Sotindra Nath Roy Choudhuri, Settlement-holders ... | | .. | 1,200 | . | | | . | | .. |
| 3594 | Keshov Lal Bose, Patnidar . | . | | .. | . | 500 | | .. | ... | |
| 3595 | Girindra Nath Mukerji, Patnidar | | 500 | 600 | 700 | . | .. | | | |
| 3596 | Bhadhar Chandra Pandey and Kunja Behari Pandey, Patnidars | ... | | . | 1,500 | . | . | | .. | ... |
| 3602 | Jogendra Nath Mitra, Nazir . | ... | | 3,000 | .. | | .. | .. | . | . |
| 3603 | Sasi Bhusan Dey, Naib Nazir, Bagerhat Munsif ... ... | | . | 500 | . | . | ... | ... | | ... |
| 3604 | Purna Chandra Das Gupta, Nazir ... .. | | .. | 1,000 | | .. | .. | . | .. | ... |
| 3608 | Bhupal Chandra Tarafdar, Ranger ... . | . | | 1,000 | . | . | | .. | .. | |
| 3609 | Nilkanta Singha, Ranger . | ... | .. | 2,000 | | | . | | .. | ... |
| 3610 | Ram Lal Nandy, Deputy Ranger . .. ... .. | . | ... | 500 | . | | . | | . | ... |
| 3611 | Sasi Kumar Datta, Deputy Ranger ... ... . ... | . | | 1,000 | .. | . | .. | .. | .. | .. |
| 3612 | Bipra Das Kanungo .. | . | . | 500 | ... | ... | | ... | ... | . |
| 3613 | Birendra Mohan Das Gupta, Ranger . . ... ... | | . | 500 | .. | . | . | . | ... | .. |
| 3614 | Abinash Chandra Chakrabarti, Deputy Ranger ... | | .. | 1,000 | . | . | .. | | | ... |
| 3615 | Srinath Shome, Deputy Ranger | | . | 1,000 | | | . | . | .. | . |
| 3618 | Sitikanta Chakrabarty, Forester | . | . | 500 | .. | . | | | | .. |
| 3519 | Lucknan Chandra Das, Forester | . | .. | 500 | .. | .. | . | . | | .. |
| 3620 | Abdul Mazid, Ranger . . | . | ... | 2,000 | . | | . | . | . | .. |
| 3621 | Lakshmi Ranjan Bose, Deputy Ranger ... . .. | ... | | 500 | . | . | . | ... | .. | .. |
| 3622 | Sarat Chandra Chakrabarty, Deputy Ranger . .. ... | . | .. | 1,000 | .. | . | ... | ... | .. | ... |
| 3623 | Khetra Nath Chaudhury, Forester .. .. . | | . | 500 | .. | .. | ... | ... | ... | ... |
| 3627 | Rasik Lal Roy, Deputy Ranger | . | . | 500 | .. | 500 | ... | | ... | . |
| 3634 | Satkhira Dispensary . | . | | 1,300 | .. | . | .. | .. | ... | ... |
| 3636 | Amritamoyee Charitable Dispensary Fund .. ... . | . | | 3,600 | ... | | ... | ... | ... | ... |
| 3638 | Dowlatpur Charitable Dispensary .. ... ... . | ... | . | 1,500 | ... | | .. | .. | ... | ... |
| 3640 | Pramatha Bhusan Bose, Head Clerk ... ... ... ... | | ... | ... | ... | 500 | ... | ... | ... | .. |
| | NADIA | | | | | | | | | |
| 3646 | Khetra Nath Ganguly, Treasurer ... ... ... . | ... | . | ... | .. | ... | ... | .. | ... | ... |
| | Carried over ... | 12,600 | 61,100 | 72,53,800 | 91,800 | 1,30,800 | ... | 16,600 | 44,500 | 5,47,400 |

| 5½ PER CENT | | | | 6 PER CENT | | | | | Debentures and Railway shares | Total | Name of officer to whom interest is sent |
|---|---|---|---|---|---|---|---|---|---|---|---|
| 1922 | 1923 | 1925 | 1928 | 1926 | 1927 | 1930 | 1931 | 1932 | | | |
| Rs | Rs. | Rs | Rs | Rs | Rs | Rs | Rs | Rs | Rs | | |
| 100 | 1,100 | 5,000 | 8,17,750 | 4,82,200 | 51,100 | 19,41,200 | 8,75,800 | 3,74,500 | 2,04,500 | 1,28,81,950 | |
| .. | | | | | | | | | | 1,200 | Collector |
| | | | | | | | | | | 500 | Ditto |
| . | | | | | | | | | | 1,800 | Ditto |
| . | | | | | | | | | | 1,500 | Ditto |
| | | | | | | | | | | 4,000 | District Judge |
| | | | | | | | | | | 500 | Ditto |
| | | | | | | | | | | 1,000 | Ditto |
| | | | | | | | | | | 1,000 | Forest Divisional Officer, Sundarbans |
| | | | | | | | | | | 2,000 | Ditto |
| | | | | | | | | | | 500 | Ditto |
| | | | | | | | | | | 1,000 | Ditto |
| | | | | | | | | | | 500 | Ditto |
| | | | | | | | | | | 500 | Ditto |
| | | | | | | | | | | 1,000 | Ditto |
| | | | | | | | | | | 1,000 | Ditto |
| | | | | | | | | | | 500 | Ditto |
| | | | | | | | | | | 500 | Ditto |
| | | | | | | | | | | 2,000 | Ditto |
| | | | | | | | | | | 500 | Ditto. |
| | | | | | | | | | | 1,000 | Ditto |
| | | | | | | | | | | 500 | Ditto |
| | | | | | | | | | | 1,000 | Ditto |
| .. | | | | | | | | | | 1,300 | Chairman, Municipality |
| . | | | | | | | | | | 3,600 | Chairman, District Board |
| . | | | | | | | | | | 1,500 | Civil Surgeon |
| .. | | | | | | | | | | 500 | Superintendent of Police |
| . | | .. | 15,000 | . | | | | | | 15,000 | Collector |
| 100 | 1,100 | 5,000 | 8,32,750 | 4,82,200 | 51,100 | 19,41,200 | 8,75,800 | 3,74,500 | 2,04,500 | 1,29,26,850 | |

| Ledger Folio No | Name of Person or Fund on whose behalf held | 3½ PER CENT | | | | 3 per cent of 1896 97 | 4 PER CENT | | 5 PER CENT. | |
|---|---|---|---|---|---|---|---|---|---|---|
| | | 1842-43. | 1854-55 | 1865 | 1900 01 | | 1915-16 | 1916-17 | 1929-47 | 1945-55 |
| | | Rs | Rs | Rs | Rs | Rs | Rs | Rs | Rs | Rs |
| | Brought forward .. | 12,600 | 61,100 | 72,53,800 | 91,800 | 1,80,800 | .. | 16,600 | 44,500 | 5,47,400 |
| | PRESIDENCY DIVISION—*contd* | | | | | | | | | |
| | NADIA—*contd* | | | | | | | | | |
| 3647 | Phani Bhusan Pal, Nazir, Kushtia subdivision | | | 500 | | | . | | | |
| 3648 | Gopal Chandra Ganguly, for protection of his estate from sale, etc | | | 600 | | | | | | . |
| 3649 | Bhola Nath Banerji, Khas Tahsildar | | | 500 | | | | . | | |
| 3650 | Girindra Nath Chatterjee, Sub Treasurer, Meherpur | | | 500 | | | | .. | . | ... |
| 3651 | Jitendra Nath Mukherji, Sub-Treasurer, Ranaghat . . | | | | | | . | | | |
| 3652 | Lalit Kumar Sen, for protection of his estate from sale, etc | | | | 500 | | | | . | . |
| 3653 | Lalgopal Dutt, Peshkar | | | | | | | | . | |
| 3654 | Aswini Kumar Roy, Nazir | | | | | | | | | |
| 3657 | Abinash Chandra Roy, Nazir | | | 3,000 | | | . | | | |
| 3658 | Munshi Mahatabuddin Ahmed, Nazir, Chuadanga Munsifi . | | | 1,000 | | | | . | | |
| 3660 | Atar Mani Dasi | | | 300 | | | | | | |
| 3661 | Mathura Nath Chakravarti, Nazir, Meherpur Munsifi . | | | 1,000 | | | | . | | |
| 3662 | Chandra Bhusan De Chaudhuri, Nazir, Kushtia Munsifi | | | 500 | | | | | | |
| 3663 | Nirapada Ghatak, Naib Nazir | | | | | | | | | |
| 3664 | Ramkamal Sarkar under Act V case No 58 of 1920 | | | | 2,500 | | | ... | .. | |
| 3665 | Jatindra Mohan Ghosh, Nazir, Meherpur Munsifi | | | 500 | | | | . | | |
| 3670 | Maintenance of village road from Kanchrapara to Kaliarpat . | | . | 2,500 | | | ... | . | | |
| 3671 | Maintenance of burning ghat building at Pansila ... | | | 100 | | | | | | . |
| 3673 | Debendra Nath Mukherji, Secretary . | | . | | | 500 | | . | | |
| 3674 | Purna Chandra Tarafdar, Cashier .. .. | | | | . | . | . | | | .. |
| 3675 | Siddeswar Chatterji, Cashier | | | | 1,000 | | .. | | .. | |
| 3675 | Donation by Srimati Radharani Devi and Durgamoni Devi for upkeep of a Dharmasala | 400 | | 1,000 | 600 | | | | | |
| 3679 | Birnagar Municipality | | | 2,000 | | .. | | . | | |
| 3681 | Debi Bindubasini Maitra Prize | | | | | 200 | | | | |
| 3682 | Assistant Surgeon Madhusudan Maitra's Prize | | | . | | 200 | | | | ... |
| 3683 | Menaka Devi Maitra's Annual Cash Prize | . | | | | 100 | . | | | |
| 3684 | Taylor Prize . | | | 800 | | | | | | |
| 3685 | Rai Braja Mohan Dutta Bahadur's Fund ... . | .. | .. | 1,000 | .. | | | | . | . |
| 3688 | Krishnagar College .. | .. | | 75,100 | | . | ... | . | . | ... |
| | Carried over | 13,000 | 61,100 | 73 14,700 | 96,400 | 1,81,800 | .. | 16,600 | 44,500 | 5,47,400 |

| 5½ PER CENT | | | | 6 PER CENT | | | | | Debentures and Railway shares | Total | Name of officer to whom interest is sent |
|---|---|---|---|---|---|---|---|---|---|---|---|
| 1922 | 1923 | 1925 | 1928 | 1926 | 1927 | 1930 | 1931 | 1932 | | | |
| Rs | Rs | Rs | Rs | Rs | Rs | Rs | Rs | Rs | Rs | Rs | |
| 100 | 1,100 | 5,000 | 8,92,750 | 4,82,200 | 51,100 | 19,11,200 | 8,75,800 | 3,74,500 | 2,04,500 | 1,29,20,850 | |
| . | | | | | | | | | | 500 | Collector |
| | | | | | | . | . | | | 600 | Ditto |
| . | | .. | . | | | . | | | . | 500 | Ditto |
| | . | | | | | 100 | | | | 600 | Ditto |
| | | | 500 | | | | . | | | 500 | Ditto |
| | | | | | | | | | | 500 | Ditto |
| | | . | | | | | 500 | | | 500 | Ditto |
| | | | | | | | 200 | | | 200 | Ditto |
| . | | | | | | | | | | 3,000 | District Judge |
| | | | | | . | | | | | 1,000 | Ditto |
| | | | | | | | | | | 300 | Ditto |
| | | | | | | | | | | 1,000 | Ditto |
| | | | | | | | | | | 500 | Ditto |
| | | | | | | 500 | | | | 500 | Ditto |
| | | | | | . | . | | | | 2,500 | Ditto |
| | | | . | | | | | | | 500 | Ditto |
| | | | | | | | | | | 2,500 | Chairman, District Board |
| . | | | | | | .. | | .. | | 100 | Ditto |
| | | | | | | | | | . | 500 | Chairman, Santipur Municipality |
| | | | | | | | | 1,000 | | 1,000 | Ditto |
| | | | | | | | | | | 1,000 | Ditto |
| | | | . | | | | | | . | 2,000 | Ditto |
| | | | | .. | | | | | | 2,000 | Chairman, Birnagar Municipality |
| . | | | | | | | ... | | | 200 | Magistrate |
| | . | | .. | | . | | | | . | 200 | Ditto |
| | | | | | . | . | | | .. | 100 | Ditto |
| . | | | | . | . | | | | | 800 | Ditto |
| ... | | | | | .. | ... | | .. | | 1,000 | Ditto |
| . | . | ... | | . | .. | . | . | . | ... | 75,100 | Collector and Principal of the College |
| 100 | 1,100 | 5,000 | 8,93,250 | 4,82,200 | 51,100 | 19,41,800 | 8,76,500 | 3,75,500 | 2,04,500 | 1,30,26,550 | |

| Ledger Folio No | Name of Person or Fund on whose behalf held | 3½ PER CENT | | | | 3 per cent of 1896-97 | 4 PER CENT | | 5 PER CENT | |
|---|---|---|---|---|---|---|---|---|---|---|
| | | 1842-43 | 1854-55 | 1865 | 1900-01 | | 1915-16 | 1916-17. | 1929-47 | 1945-55 |
| | | Rs | Rs | Rs | Rs | Rs | Rs | Rs | Rs | Rs |
| | Brought forward | 13,000 | 61,100 | 78,44,700 | 96,400 | 1,81,800 | .. | 16,600 | 44,500 | 5,47,400 |
| | PRESIDENCY DIVISION - *contd* | | | | | | | | | |
| | NADIA—*concld* | | | | | | | | | |
| 3689 | Mohini Mohan Rai Prize | | | 2,900 | | | | | | |
| 3690 | Smith and Macdonell Prize | .. | | | | 300 | | | | |
| 3691 | Endowment of Debendra Nath Singha Roy, in the Krishnagar College | 7,800 | | | | | | | | |
| 3692 | Livingstone Memorial Fund | | | 200 | | | | | | |
| 3693 | Hemangshu Shekhar Kar Prize Fund | 100 | | | | | | | | |
| | JESSORE | | | | | | | | | |
| 3998 | Radhagobind Chandra, Treasurer | | | 15,000 | | | | | | |
| 3999 | Raghu Nath Thakur (idol) under section 15 of Act XI of 1859 | | | 10,500 | | | | | | |
| 4000 | Chanchra Trust Estate | | | 900 | | | | | 600 | |
| 4001 | Hari Mohan Sarkar and Salimullah Chowdhury, under rule XI, section 1, Chapter IV of Board's Rules | | | 500 | | | | | | |
| 4002 | Gurindra Mohan Thakur and Messrs Jardine, Skinner & Co | | | 500 | | | | | | |
| 4004 | Ashrufunnissa and Mothur Kundu | | | 700 | | | | | .. | |
| 4005 | Sorojini Mitra guardian of Nripendra Gopal Mitra, minor | | | | | 300 | | | .. | |
| 4006 | Nogendra Nath Ghose, Poddar, Narail Sub-Treasury | | | | | 200 | | | | |
| 4009 | Kazi Maujural Hafez, Nazir, Narail subdivision | | | | | | | | 200 | |
| 4010 | Prodyot Kumar Haldar, Tahsildar, Mukerji, Ward's Estate | | | 600 | | | | | | |
| 4016 | Bama Charan Chatterjee, Nazir, Jhenidah Munsih | | | 1,600 | | | | | | .. |
| 4017 | Lakshman Chandra Ghosh, Nazir | | | .. | | | | | | 500 |
| 4018 | Monomohan Ganguli, Nazir, Bongong Munsih | | | 1,000 | | | | | | |
| 4019 | Sunil Kumar Banarji, Nazir, Magura Munsih | | | 500 | | | | .. | | |
| 4022 | Raja Promotho Bhushan Deb Rai Jubilee Medal | | | 600 | | | | | | |
| 4023 | Temple Scholarship | | | 2,500 | | | | | | |
| 4034 | Rai Mahes Chandra Chakravarti Bahadur's Scholarship Teacher's Reward Fund | | | 2,000 | | | | | | |
| | Carried over | 20,900 | 61,100 | 78,81,100 | 96,400 | 1,82,600 | ... | 16,600 | 45,800 | 5,47,900 |

| 5½ PER CENT | | | | 6 PER CENT | | | | | Debentures and Railway shares | Total | Name of officer to whom interest is sent |
|---|---|---|---|---|---|---|---|---|---|---|---|
| 1922 | 1923 | 1925 | 1928 | 1926 | 1927 | 1930 | 1931 | 1932 | | | |
| Rs | Rs | Rs | Rs | Rs | Rs | Rs | Rs | Rs | Rs | Rs | |
| 100 | 1,100 | 5,000 | 8,33,250 | 4,82,200 | 51,100 | 19,41,800 | 8,76,500 | 3,75,500 | 2,04,500 | 1,30,26,550 | |
| . | | | | . | | . | | | | 2,900 | Collector and Principal of the College |
| . | . | . | | | | | | | | 300 | Principal, Krishnagar College |
| . | | | | .. | | | | | . | 7,800 | Ditto |
| ... | | | | . | | | | | | 200 | Ditto |
| | | | | | | | | | | 100 | Head Master, Krishnagar Collegiate, School |
| | | . | | | | | | | | 15,000 | Collector |
| | | | . | | | | | . | . | 10,500 | Ditto |
| | | | . | . | | | | . | | 1,500 | Ditto |
| | | | | | | | | | | 500 | Ditto |
| | ... | | | . | | .. | | | | 500 | Ditto |
| | | | | | | | | | | 700 | Ditto |
| | . | .. | . | . | | | | | | 300 | Ditto |
| .. | ... | | | | | | | | | 200 | Ditto. |
| .. | | | | | | | | . | | 200 | Ditto |
| | .. | | | | | | | . | | 600 | Ditto |
| | | | . | | | . | | . | . | 1,000 | District Judge |
| . | | | | | . | | . | | | 500 | Ditto |
| .. | | | | | . | | | | | 1,000 | Ditto |
| . | . | | | | | | | | | 500 | Ditto |
| .. | . | ... | . | . | | . | | | | 600 | Magistrate |
| . | . | ... | . | | | .. | | . | | 2,500 | Ditto |
| | .. | . | . | .. | . | | | | | 2,000 | Ditto |
| 100 | 1,100 | 5,000 | 8,33,250 | 4,82,200 | 51,100 | 19,41,800 | 8,76,500 | 3,75,500 | 2,04,500 | 1,30,75,950 | |

| Ledger folio No | Name of Person or Fund on whose behalf held | 3½ PER CENT | | | | 3 per cent of 1896-97 | 4 PER CENT | | 5 PER CENT | |
|---|---|---|---|---|---|---|---|---|---|---|
| | | 1842-43 | 1854-55 | 1895 | 1900 01 | | 1915 16 | 1916-17 | 1929-47 | 1945 55 |
| | | Rs | Rs | Rs | Rs | Rs | Rs | Rs | Rs | Rs |
| | Brought forward | 20,900 | 61,100 | 73,84,100 | 96,400 | 1,32,600 | | 16,600 | 45,300 | 5,47,900 |
| | PRESIDENCY DIVISION—*contd* | | | | | | | | | |
| | JESSORE—*contd* | | | | | | | | | |
| 4027 | Jessore School | | . | 5,000 | | | | | | |
| 4029 | Jessore Dispensary | | | 1,800 | | | | | | .. |
| 4031 | Chanduria-Khaturia Bridge Repairing Fund | | | 1,000 | | . | | | | |
| 4032 | Sridharpur Dispensary | . | | 600 | | | | | .. | .. |
| 4033 | Gourmani District Road | | | 500 | | | | | | .. |
| 4034 | Prasanna Kumar Ghose, for a dispensary in Narail | | | 1,000 | | | | . | | .. |
| 4037 | Kali Prasanna Bhattacharji, Head Clerk . | | | 500 | | . | | | | . |
| 2996 | Ramendra Nath Pal, Accountant .. | 500 | | | | | . | . | .. | |
| | MURSHIDABAD | | | | | | | | | |
| 4041 | Mackenzie Medal Fund | | | 500 | | | | | | |
| 4042 | Raja Jogendra Narain Roy Endowment for Berhampore Charitable Dispensary | | | 18,000 | | | | | | |
| 4044 | Brojendra Narain Bose, Treasurer | | | 15,000 | | | | | | |
| 4045 | Mackenzie Public Hall | | | 12,300 | . | | | | | |
| 4046 | Estate of Basanta Ali Khan | | | 39,200 | | | | | . | ... |
| 4047 | Tomb and Emambarah of Gaitaru Begum | | | 50,000 | | | | | | |
| 4048 | Khitish Chandra Ghosh, Nazir, Kandi subdivision | | | 500 | | | | | .. | ... |
| 4049 | Mohendra Narain Chaudhury, Surety of Gour Sundar Hazri, Sub-Treasurer, Kandi subdivision .. | | | | 500 | | | . | ... | . |
| 4050 | Ram Renu Chowdhury, Khas Tashildar ... . | . | | .. | . | | .. | | . | ... |
| 4052 | Jogindra Nath Mukerji, Manager, Cossimbazar Ward's Estate | | | 2,000 | | | | | | |
| 4054 | Moni Mohan Sarkar, Record keeper, Cossimbazar Ward's Estate .. . | . | | 200 | | | | | | |
| 4054 | Gobinda Chandra Das, Tahsildar, Cossimbazar Ward's Estate . | | | | . | | . | . | 200 | . |
| 4055 | Abhoy Charan Chatterji, Cossimbazar Ward's Estate . | . | .. | | | 500 | | | | . |
| 4056 | Guru Das Bhattacharjee, Cossimbazar Ward's Estate . | . | . | 200 | .. | . | .. | .. | .. | .. |
| 4057 | Sashi Bhusan Banerji, Cossimbazar Ward's Estate | | .. | . | | | .. | | . | ... |
| 4058 | Cossimbazar Ward's Estate . | | | 51,700 | . | .. | 33,800 | 13,000 | 2,86,200 | . |
| 4060 | Syed Murtoza Ali Mirza, minor | | | .. | | . | .. | | | .. |
| 4061 | Syed Mustofa Ali Mirza, minor | . | | | | . | | . | ... | ... |
| 4062 | Munshi Alif Hossain, Head Clerk and Sub-Treasurer, Jangipur subdivision ... .. | | ... | 500 | .. | . | .. | ... | ... | .. |
| | Carried over ... | 21,400 | 61,100 | 75,87,600 | 96,900 | 1,33,100 | 33,800 | 29,600 | 3,31,700 | 5,47,900 |

| 5½ per cent | | | | 6 per cent | | | | | Debentures and Railway shares | Total | Name of officer to whom interest is sent |
|---|---|---|---|---|---|---|---|---|---|---|---|
| 1922 | 1923 | 1925 | 1928 | 1926 | 1927 | 1930 | 1931 | 1932. | | | |
| Rs | Rs | Rs | Rs | Rs | Rs | Rs | Rs | Rs | Rs | Rs | |
| 100 | 1,100 | 5,000 | 8,33,250 | 4,82,200 | 51,100 | 19,41,800 | 8,76,500 | 3,75,500 | 2,04,500 | 1,[illegible],7[illegible],950 | |
| .. | | | | | | . | | | . | 5,000 | Head Master |
| | | . | . | | | | | | | 1,800 | Chairman, Municipality |
| | | | | | | | | | | 1,000 | Chairman, District Board |
| . | .. | | | | | | | | | 600 | Ditto |
| | | .. | | | .. | | | | | 500 | Ditto |
| | | .. | | | | . | | | | 4,000 | Ditto |
| | | | | | | | | | | 500 | Superintendent of Police, Jessore |
| . | | | | | | | | | | 500 | Ditto |
| | | | | | | | | | | 500 | Secretary and Treasurer, Board of Trustees Berhampore College |
| | | | 40,100 | | | | | | | 58,100 | Secretary, Managing Committee, Berhampore Dispensary |
| .. | | | | | | | | | | 15,000 | Collector |
| | | | | | | | | 2,200 | | 11,500 | Ditto |
| | | | | | | | | | | 19,200 | Ditto |
| | | | | | | | | | | 50,000 | Ditto |
| | | | | | | | | | | 500 | Ditto |
| | | | | | | . | | | | 500 | Ditto |
| | .. | | | | 500 | | | | | 500 | Ditto |
| | | | | . | | . | . | | | 2,000 | Ditto |
| . | .. | | | | | | | | | 200 | Ditto |
| . | | | | | | | | | . | 200 | Ditto |
| | . | | . | . | . | | | | | 500 | Ditto |
| ... | .. | | . | . | | ... | | | | 200 | Ditto |
| ... | .. | . | | | | 300 | | | . | 300 | Ditto |
| (a) | | . | 10,000 | .. | .. | 99,000 | | | 16,400 | 5,10,100 | Ditto |
| .. | ... | ... | 600 | | | | . | .. | | 600 | Ditto |
| ... | .. | | 600 | | | | | | | 600 | Ditto |
| .. | . | .. | ... | .. | .. | . | .. | | . | 500 | Ditto |
| 100 | 1,100 | 5,000 | 8,84,550 | 4,82,200 | 51,600 | 20,41,100 | 8,76,500 | 3,77,700 | 2,20,900 | 1,07,83,850 | |

(a) Rs 500 invested in 1930 in January 1923

| Ledger Folio No | Name of Person or Fund on whose behalf held | 3½ PER CENT | | | | 3 per cent of 1896 97 | 4 PER CENT | | 5 PER CENT | |
|---|---|---|---|---|---|---|---|---|---|---|
| | | 1842-43 | 1851 55 | 1865 | 1900-01 | | 1915-16. | 1916-17. | 1929 47 | 1945-55 |
| | | Rs | Rs | Rs | Rs | Rs | Rs | Rs. | Rs | Rs |
| | Brought forward | 21,400 | 61,100 | 75,87,600 | 96,000 | 1,33,100 | 33,800 | 29,600 | 3,31,700 | 5,47,900 |
| | PRESIDENCY DIVISION—*contd* | | | | | | | | | |
| | MURSHIDABAD—*contd* | | | | | | | | | |
| 4063 | Maintenance of a telegraph office at Kandi ... | | | 800 | | | | | | . |
| 4064 | Jagat Chandra Roy, Nazir, Jangipur subdivision .. .. | | . | 300 | | | | | | |
| 4065 | Bishnu Charan Ghosh, Head Clerk and Sub-Treasurer, Lalbagh Subdivisional Office . | | | 500 | | | | | | |
| 4066 | Ram Ratan Ghosh, Nazir, Lalbagh subdivision | | | | | | | | | .. |
| 4067 | Kanti Charan Sinha, Peskar .. | | | . | | | | | .. | |
| 4077 | Moti Lal Roy, Tahsildar, Jangipur . . | | 400 | 100 | | | | | | . |
| 4079 | Kandi Girish Chandra Hospital | | | 1,80,400 | | . | | . | | 3,000 |
| 4080 | Murshidabad Dispensary | | . | 5,000 | | . | | | | |
| 4081 | Berhampore Girls' School | | | 1,700 | | | | | | |
| 4082 | Woodburn Medal Fund in Nawab's High School . | | | 500 | | | | . | | |
| 4083 | Lalbagh Girls' School | | | | | 900 | | | | |
| 4084 | Kennedy Memorial Fund . | | | 3,000 | | | | | | |
| 4085 | Rao Maheo Narain Rye Ward in Berhampore Charitable Dispensary | | | 49,000 | | | | 15,000 | | . |
| 4086 | Rani Manindra Mohini Devi Sanitary Improvement Fund | | | 4,900 | | | | | | |
| 4087 | Khetra Nath Mukerji Medal Fund . . | | | 1,700 | | | | | | |
| 4090 | Nanda Lal Fund . .. | | . | 21,500 | | . | | | | |
| 4094 | Bijoy Krishna Chattoraj, Nazir, Lalbogh Munsifi | . | | | . | 500 | . | | | |
| 4095 | Labh Chand Set, guardian in miscellaneous case No 31 of 1910, Act VIII of 1890 ... | .. | | 61,500 | . | .. | ... | | .. | . |
| 4096 | Lalji Saha, Trustee of the estate of Gangadas Mahant | . | . | 1,000 | . | . | . | | . | . |
| 4098 | Nawab Sir Asir Quadr Sayed Wasif Ali Mirza in case No 38 of 1908 .. .. .. | . | | 1,000 | ... | | . | | . | ... |
| 4099 | Saukat Ara Kulsam Begum, Administratrix to the Estate of Syed Nadir Hosain . | | | 1,500 | . | | | | | . |
| 4100 | S Abdar Rahaman, Nazir, Kandi Munsifi .. .. | | . | 1,000 | | | ... | | .. | ... |
| 4101 | Gobind Chand Bora, in case No 38 of 1916 ... | . | . | 500 | . | .. | . | | | .. |
| 4102 | Kiran Bala Devi, of Jangipur, under section 32, Act II of 1894 . ... | ... | ... | 8,400 | . | | | | | .. |
| 4104 | Srimati Nrityakali Dasi, under section 32, Act I of 1894 . | . | . | 2,900 | . | . | | | .. | .. |
| 4105 | Girudas Dhar, under section 32, Act I of 1894 . . . | . | . | 500 | | | .. | | ... | .. |
| | Carried over .. | 21,400 | 61,500 | 79,35,300 | 96,000 | 1,34,500 | 33,800 | 44,600 | 3,31,700 | 5,50,900 |

| 5½ per cent | | | | 6 per cent | | | | | Debenture, and Railway shares | Total. | Name of officer to whom interest is sent |
|---|---|---|---|---|---|---|---|---|---|---|---|
| 1922 | 1923 | 1925 | 1928 | 1926 | 1927 | 1930 | 1931 | 1932 | | | |
| Rs | Rs | Rs | Rs | Rs | Rs | Rs | Rs | Rs | Rs | Rs | |
| 100 | 1,100 | 5,000 | 8,84,550 | 4,82,200 | 51,600 | 20,41,100 | 8,76,500 | 3,77,700 | 2,20,900 | 1,41,51,650 | |
| | | | | | | | | | | 800 | Collector |
| | | | | | | | | | | 300 | Ditto |
| | | | | | | | | | | 500 | Ditto |
| | | | | | | 200 | | | | 200 | Ditto |
| | | | | | | 100 | | | | 100 | Ditto |
| | | | | | | | | | | 500 | Subdivisional Officer Jangipur |
| | | | | | | | | | | 1,83,400 | Magistrate |
| | | | | | | | | | | 5,000 | Ditto |
| | | | | | | | | | | 1,700 | Ditto |
| | | | | | | | | | | 500 | Ditto |
| | | | | | | | | | | 900 | Ditto |
| | | | | | | | | | | 3,000 | Ditto |
| | | | | | | | | | | 64,000 | Ditto |
| | | | | | | | | | | 4,900 | Ditto |
| | | | | | | | | | | 1,700 | Ditto |
| | | | | | | | | | | 21,500 | Magistrate and President, M N Academy Lalgola |
| | | | | | | | | | | 500 | District Judge |
| | | | | | | | | | | 61,500 | Ditto |
| | | | | | | | | | | 1,000 | Ditto |
| | | | | | | | | | | 1,000 | Ditto |
| | | | | | | | | | | 1,500 | Ditto |
| | | | | | | | | | | 1,000 | Ditto |
| | | | | | | | | | | 500 | Ditto |
| | | | | | | | | | | 8,400 | Ditto |
| | | | | | | | | | | 2,900 | Ditto |
| | | | | | | | | | | 500 | Ditto |
| 100 | 1,100 | 5,000 | 8,84,550 | 4,82,200 | 51,600 | 20,41,400 | 8,76,500 | 3,77,700 | 2,20,900 | 1,41,51,650 | |

| Ledger Folio No | Name of Person or Fund on whose behalf held | 3½ PER CENT | | | | 3 per cent of 1896-97 | 4 PER CENT | | 5 PER CENT | |
|---|---|---|---|---|---|---|---|---|---|---|
| | | 1842-43 | 1854-55 | 1865 | 1900 01 | | 1915-16 | 1916-17 | 1929-47. | 1945 55 |
| | | Rs | Rs | Rs | Rs | Rs | Rs | Rs | Rs | Rs |
| | Brought forward | 21,400 | 61,500 | 79,35,300 | 96,900 | 1,34,500 | 33,800 | 44,600 | 3,31,700 | 5,50,900 |
| | PRESIDENCY DIVISION—*concld* | | | | | | | | | |
| | MURSHIDABAD—*concld* | | | | | | | | | |
| 4107 | Digendra Chandra Sen, Nazir, Jangipur Munsifi | | | 700 | | | | | | . |
| 4108 | Gopi Mohan Mukherji, Common Manager in miscellaneous case No 58 of 1915 | | | | | | | | . | . |
| 4109 | Syed Sadek Reza, Manager, Wakf Estate Basanta Ali Khan | | | 4,000 | | | | | | |
| 4110 | Ashutosh Bhattacharji in case No 84 of 1918 | | | | | | | | . | |
| 4111 | Labh Chand, guardian of Kamal Singh Kathari . | | 800 | 6,100 | 6,500 | | | .. | | |
| 4112 | Rasik Lal Sarma in case No 41 of 1920. | | | 3,000 | 2,000 | | | | | |
| 4116 | Berhampore Dispensary | | 47,000 | 47,600 | 52,400 | 100 | | 15,000 | .. | |
| 4117 | Heronmoy Neogy Chaudhury, 2nd Mohurir . | | | 100 | | | | | .. | . |
| 4118 | Kali Das Mukherjee, Mohurir | | | | | . | | | .. | . |
| 4119 | Kumudbandhu Das Gupta, Cashier .. . | . | | . | | 2,000 | . | .. | | |
| 4120 | Narendra Nath Bhattacharji, Head Mohurir . ... | . | | 200 | | | | . | .. | |
| 4121 | Tabarak Mullick, Assistant Tax-Daroga ... .. | | | 200 | | | | | | |
| 4122 | Berhampore Municipality | | | 2,500 | | | . | . | . | |
| 4126 | Jangipur Dispensary .. | . | . | 1,600 | | | | | | |
| 4128 | Mosley Scholarship | | | 1,200 | | | | | | |
| 4132 | Rajib Lochan Scholarship | .. | ... | 15,000 | .. | | | . | | .. |
| 4133 | Berhampore College building | .. | | 14,000 | .. | | | | . | . |
| 4134 | Ditto ditto hostel | | | 14,000 | | | . | | . | |
| 4136 | Patit Paban Mozumdar, Sub-Inspector . .. | | . | | | 500 | | | | |
| 4138 | Revatikanta Mozumdar, Clerk | | | . | 500 | | | . | | . |
| 4139 | Nabani Dhar Ghose, Excise Sub-Inspector ... .. | | . | .. | | | | . | .. | |
| | BURDWAN DIVISION | | | | | | | | | |
| | BURDWAN | | | | | | | | | |
| 4143 | Purbasthali Chaukidari Pay Fund ... ... .. ... | .. | .. | 1,500 | ... | . | | . | .. | .. |
| 4144 | Jotindra Mohan Roy, Treasurer | | . | 15,000 | . | | . | .. | .. | .. |
| 4145 | Investments under Act VI of 1857 and Act X of 1870 ... | ... | .. | 1,19,400 | ... | ... | ... | .. | .. | .. |
| 4146 | Arun Chandra Chatterjee, Khas Tahsildar, Kalna ... ... | .. | ... | . | .. | ... | ... | ... | ... | ... |
| | Carried over ... | 21,400 | 1,08,800 | 81,81,400 | 1,58,800 | 1,37,100 | 33,800 | 59,600 | 3,31,700 | 5,50,900 |

| 5½ per cent | | | | 6 per cent | | | | | Debentures and Railway shares | Total | Name of officer to whom interest is sent |
|---|---|---|---|---|---|---|---|---|---|---|---|
| 1922. | 1923 | 1925 | 1928 | 1926 | 1927 | 1930 | 1931 | 1932 | | | |
| Rs | Rs | Rs | Rs | Rs | Rs | Rs | Rs | Rs | Rs | Rs | |
| 100 | 1,100 | 5,000 | 8,81,550 | 4,82,200 | 51,600 | 20,41,400 | 8,78,500 | 8,78,700 | 2,20,900 | 1,41,51,650 | |
| .. | .. | | | | | | | | | 700 | District Judge |
| . | . | | 500 | | | | | | | 500 | Ditto |
| | | | | | | 1,000 | | | | 5,000 | Ditto |
| | | | | | | 1,500 | | | | 1,500 | Ditto |
| | | | | | | | | | | 12,900 | Ditto |
| . | | | | | | | | | | 5,000 | Ditto |
| | . | | | | | | | | | 1,02,100 | Chairman, Berhampur Municipality |
| .. | | | | | | | | | | 100 | Ditto |
| | | | 100 | .. | | | | | | 100 | Ditto |
| . | | | | | | | | | | 2,000 | Ditto |
| | | | | | | | | | | 200 | Ditto |
| | | | | | | | | | | 200 | Ditto |
| . | . | | | | | | | | | 2,500 | Ditto |
| | | | | | | | | | | 1,500 | Chairman, Jangipur Municipality |
| . | | | | | | | .. | | | 1,200 | Chairman, District Board |
| ... | | | | | | | | | | 15,000 | Maharaja Manindra Chandra Nandi |
| .. | | | | | | | | | | 14,000 | Ditto |
| .. | | | | | | | | | | 11,000 | Ditto |
| | | | | | | | | | | 500 | Superintendent of Police |
| | | | | | | | . | | | 500 | Ditto |
| ... | | | | | | 200 | | | | 200 | Superintendent, Excise and Salt |
| . | | | | | | | | | | | |
| | . | | | | | . | | | | | |
| .. | | | . | | | | | | | 1,500 | Collector |
| . | .. | .. | | | . | . | .. | .. | ... | 15,000 | Ditto |
| ... | . | . | . | .. | .. | .. | | . | . | 1,19,400 | Ditto |
| .. | . | | .. | ... | ... | 800 | | | | 800 | Ditto |
| 100 | 1,100 | 5,000 | 8,85,150 | 4,82,200 | 51,600 | 20,44,400 | 8,76,500 | 8,77,700 | 2,20,900 | 1,45,27,650 | |

| Ledger Folio No | Name of Person or Fund on whose behalf held | 3½ PER CENT | | | | 3 per cent of 1896-97 | 4 PER CENT | | 5 PER CENT | |
|---|---|---|---|---|---|---|---|---|---|---|
| | | 1842-43 | 1854-55 | 1865 | 1900-01 | | 1915-16 | 1916-17 | 1929-47. | 1945-55 |
| | | Rs | Rs | Rs | Rs | Rs | Rs | Rs | Rs | Rs |
| | Brought forward | 21,400 | 1,06,800 | 81,83,100 | 1,58,300 | 1,37,100 | 33,800 | 59,600 | 3,31,700 | 5,50,900 |
| | BURDWAN DIVISION *contd* | | | | | | | | | |
| | BURDWAN—*concld* | | | | | | | | | |
| 4147 | Ganga Narain Mitra's Fund for perpetuating the memory of his mother Pearl Moni Dasi | | | 1,000 | | | | | | |
| 4148 | Baidyanath Naik, Nazir, Asansol subdivision | | | | | | | . | . | 300 |
| 4149 | Burdwan Vidyasagar Databya Samiti | | | 16,000 | | | | | | . |
| 4156 | Hari Narayan Singha, Nazir | | | | 2,500 | | | | | . |
| 4157 | Nanibala Dasi, Act V, case No 23 of 1904 | | | . | 1,000 | | | | | |
| 4158 | Nanitosh Sain, Nazir, Kalna Munsifi | | | 500 | | | | | | |
| 4159 | Case No 76 of 1921 | | | | | | | | | |
| 4159 | Case No 77 of 1921 | | | | . | | | | | |
| 4161 | Chagram Charitable Dispensary | | . | 10,000 | | | | | | |
| 4161 | Amarpur Agricultural Educational (Trust) . | . | | | | | . | | | |
| 4162 | Sultanpur Dispensary . | | | .. | | . | | . | 5,000 | |
| 4163 | Panchra Dispensary | | | | | | | . | | |
| 4164 | Palla Dispensary Trust Fund | | | | 13,300 | | | | | |
| 4165 | Amarpur Dispensary Fund | | | | | | .. | | | |
| 4165 | Nandipur Dispensary Fund | | 3,000 | 1,000 | 3,000 | | | . | | |
| 4165 | Kaigram Dispensary Fund | | 1,000 | 2,000 | 9,300 | | | | | |
| 4166 | Taylor Memorial Fund | | | 700 | | | | | | |
| 4167 | Flood Relief | | | 600 | | | | | . | |
| 4168 | Burdwan Dispensary | | | 18,000 | | | | | | |
| 4169 | D N Das Endowment Fund | | | 50,000 | | | | | | .. |
| 4170 | Boiler Sinking Fund | . | | 9,000 | | | | | | ... |
| 4172 | Benode Behari Sarkar | | | 100 | | . | . | | | |
| 4173 | Keshab Lal Tewari, Cashier | | 900 | | | | | | . | |
| 4175 | Satoadi Bhattacharji, Peddar | | 100 | | | .. | | | | |
| 4176 | Tustoo Kumar Sarkar | | | | 100 | | | | | |
| 4179 | Sheik Mobarak | | | .. | 100 | | | | | |
| 4181 | Bankim Behari Sen, Accountant | | | ... | 1,000 | | | | | |
| 4182 | Bhupati Nath Dutta, Assistant Accountant | . | | | 500 | | . | | . | . |
| 4183 | Amulya Charan Mukherji, Tazdaroga . . | | .. | . | 200 | | | | | ... |
| 4184 | Mohan Lal Barman, Clerk | . | ... | .. | 200 | | | | . | . |
| 4191 | Krishna Kali Datta, Head Clerk | | | 100 | .. | | | ... | . | .. |
| 4239 | Atul Chandra Ray, Head Clerk | | | . | | 500 | | | | .. |
| | BANKURA. | | | | | | | | | |
| 4196 | Girish Chandra Khan, Treasurer | | | 10,000 | . | | | . | .. | . |
| 4199 | Surendra Nath De, Nazir .. | .. | .. | 500 | .. | 1,500 | . | . | | |
| 4200 | Jyotish Chandra Biswas, Naib Nazir ... . ... ... | . | . | ... | ... | 500 | ... | . | .. | .. |
| | Carried over ... | 21,400 | 1,13,800 | 83,02,900 | 1,82,500 | 1,39,600 | 33,800 | 59,600 | 3,36,700 | 5,51,200 |

| 5½ PER CENT. | | | | 6 PER CENT | | | | | Debentures and Railway shares | Total | Name of officer to whom interest is sent |
|---|---|---|---|---|---|---|---|---|---|---|---|
| 1922 | 1923 | 1925 | 1928 * | 1926 | 1927 | 1930 | 1931 | 1932 | | | |
| Rs | Rs | Rs | Rs | Rs | Rs | Rs | Rs | Rs | Rs | Rs | |
| 100 | 1,100 | 5,000 | 8,85,150 | 4,82,200 | 51,600 | 20,44,100 | 8,76,500 | 3,77,700 | 2,20,900 | 1,45,27,550 | |
| . | | . | | | . | | | | | 1,000 | Collector |
| . | .. | | | | | | . | | | 300 | Ditto |
| | | | | | | | | | ... | 16,000 | Ditto |
| | | | | | | | | | | 2,500 | District Judge |
| .. | | | | | | | | | | 1,000 | Ditto |
| | ... | . | | | | | | | | 500 | Ditto |
| | | | | | | | 17,600 | | | 17,600 | Ditto |
| | | | | | | | 4 10 | | | 1,100 | Ditto |
| | | | | | : | | | | | 10,000 | Chairman, District Board |
| | | | | | | 20,000 | | | | 20,000 | Ditto |
| | | | | | | 7,200 | | | | 12,200 | Ditto |
| | | . | | . | | 1,000 | | | . | 4,000 | Ditto |
| | . | | | .. | | | | | | 13,300 | Ditto |
| | | . | | | . | 10,500 | | | | 10,500 | Ditto |
| | | | ... | | | | | | | 7,000 | Ditto |
| | | | | .. | | | . | | . | 12,300 | Ditto |
| | ... | . | | . | | . | . | | | 700 | Chairman, Municipality |
| | .. | .. | . | | | ... | | | | 600 | Ditto |
| | | | | | | | | | | 18,000 | Ditto |
| | | | | | | | | | | 50,000 | Ditto |
| | | | | | | | | | | 9,000 | Ditto |
| | | | | | | . | | | | 100 | Ditto |
| . | .. | | | | | | | | | 900 | Ditto |
| | | | | | | | | | | 100 | Ditto |
| ... | ... | | | | | | | | | 100 | Ditto |
| | . | | | | | | | | | 100 | Ditto |
| . | . | | | | . | | | | | 1,000 | Ditto |
| . | | | . | | | | | | | 500 | Ditto |
| . | | . | | | | | | | | 200 | Ditto |
| . | | | | | | | | . | | 200 | Ditto |
| | | .. | . | | | | | | | 100 | Registrar |
| .. | . | | . | | | | | | | 500 | Superintendent of Police |
| | | . | | .. | . | | | | . | 10,000 | Collector |
| ... | ... | .. | . | ... | .. | .. | . | . | . | 2,000 | District Judge |
| ... | ... | ... | .. | ... | .. | ... | . | ... | .. | 500 | Ditto |
| 100 | 1,100 | 5,000 | 8,85,150 | 4,82,200 | 51,600 | 20,86,100 | 8,98,400 | 3,77,700 | 2,20,900 | 1,47,54,750 | |

| Ledger Folio No | Name of Person or Fund on whose behalf held | [illegible] PER CENT | | | | 3 per cent of 1896-97 | 4 PER CENT | | 5 PER CENT | |
|---|---|---|---|---|---|---|---|---|---|---|
| | | 1842-43 | 1854-55 | 1865 | 1900-01. | | 1915-16. | 1916-17 | 1929-47 | 1945 55 |
| | [illegible] | Rs | Rs. | Rs | Rs | Rs | Rs | Rs | Rs | Rs |
| | Brought forward . | 21,400 | 1,13,800 | 83,00,900 | 1,89,500 | 1,39,600 | 33,800 | 59,600 | 3,36,700 | 5,51,200 |
| | BURDWAN DIVISION —*contd* | | | | | | | | | |
| | BANKURA—*contd* | | | | | | | | | |
| 4203 | Rai Rambandhu Chatterjee Bahadur's Sir John Woodburn Medal Fund .. . | ... | | 500 | | . | . | | ... | |
| 4201 | Bindubasini Stipend . | | | 700 | | . | ... | . | | . |
| 4207 | Bhubanmohan Muktakeshi Medal Fund . | | | 500 | .. | | . | ... | ... | |
| | BIRBHUM | | | | | | | | | |
| 4211 | Sheikh Bahar Jan, Khas Mahal Clerk | | | | | | | | | |
| 4212 | Sris Chandra Mitra, Treasurer | | | 10,000 | 5,000 | | | | . | .. |
| 4216 | Harendra Nath Mitra, Nazir, Rampur Hat Munsifi | .. | .. | | . | 1,000 | . | .. | | |
| 4217 | Tara Charan Ghose, minor | . | | 1,000 | . | | | . | | |
| 4218 | Saradindu Narain Chakraburty, Nazir . | | | 3,000 | | | | | | |
| 4219 | Durga Charan Ghose, minor . | | | 1,000 | | | . | . | | |
| 4220 | Tribhanga Murari Mandal, minor, *alias* Panchoori Mondal | | | 1,700 | | . | | | | |
| 4222 | For Idol Gopalji in L A case No 11 of 1907 . . | | | 400 | | | | | .. | .. |
| 4223 | Hari Das Mozumdar, Nazir, Dubrajpur Munsifi .. | | ... | .. | | 1,000 | | . | | |
| 4224 | Kartik Chandra Sarkar, Manager, Surul Estate ... | ... | | 2,000 | 3,000 | | | | | . |
| 4225 | Bansagopal Ghosh minor | . | . | 4,100 | | | | | | |
| 4226 | Kumaranada Swami, in case No 44 of 1918 .. | . | 1,000 | .. | .. | . | .. | | . | |
| 4230 | Bhuban Mohan Singh and Hara Sundari Dasi Modal | | . | 1,000 | .. | . | | | | . |
| 4231 | Malot Prize .. . | | ... | 1,500 | | | | | | |
| 4232 | Taylor Scholarship | . | | 2,000 | | . | | | . | . |
| 4235 | Rampur Hat Dispensary . | | .. | 1,500 | . | | | | .. | |
| 4237 | Nibaran Chandra Ghose, Court Inspector .. . .. | .. | | . | 300 | | | . | . | . |
| 4238 | Bimala Pada Banerji, Sub-Inspector . | | .. | 300 | | | | . | | |
| 4241 | Suri Municipality ... .. | ... | | 200 | | | . | | | .. |
| | MIDNAPORE | | | | | | | | | |
| 4245 | Kirtibas Barik, Naib, Jhargram Ward's Estate .. .. | | .. | 700 | | | .. | | | |
| 4246 | Purnanda Gupta, Treasurer .. | . | . | 20,000 | | | .. | . | | |
| 4247 | Konaram Patra, Tahsildar, Jalasmutha Jalpai Estate ... | . | .. | ... | 1,000 | | . | .. | .. | |
| 4248 | Prithwi Nath Singha .. | .. | .. | 100 | .. | . | . | .. | . | ... |
| 4249 | Baikuntha Panda, Tahsildar ... | ... | .. | .. | 500 | . | . | ... | .. | ... |
| 4250 | Surendra Nath Bose, Farmer, Government Estate ... .. | . | . | 500 | . | ... | ... | ... | ... | . |
| | Carried over ... | 21,400 | 1,14,800 | 83,53,700 | 1,99,300 | 1,41,600 | 33,800 | 59,600 | 3,36,700 | 5,51,200 |

| 5½ PER CENT | | | | 6 PER CENT | | | | | Debentures and Railway shares | Total | Name of officer to whom interest is sent |
|---|---|---|---|---|---|---|---|---|---|---|---|
| 1922 | 1923 | 1925 | 1928 | 1926 | 1927 | 1930 | 1931 | 1932 | | | |
| Rs | Rs | Rs | Rs | Rs | Rs | Rs | Rs | Rs | Rs | Rs | |
| 100 | 1,100 | 5,000 | 8,85,150 | 4,82,200 | 51,600 | 20,86,100 | 8,98,400 | 3,77,700 | 2,20,900 | 1,47,54,750 | |
| | | | | | | | | | | 500 | Magistrate |
| | | | | | | | | | | 700 | Ditto |
| | | | | | | | | | | 500 | Head Master, Zilla School |
| | | | | | 500 | | | | | 500 | Collector |
| | | | | | | | | | | 15,000 | Ditto |
| | | | | | | | | | | 1,000 | District Judge |
| | | | | | | | | | | 1,000 | Ditto |
| | | | | | | | | | | 3,000 | Ditto |
| | | | | | | | | | | 1,000 | Ditto |
| | | | | | | | | | | 1,700 | Ditto |
| | | | | | | | | | | 400 | Ditto |
| | | | | | | | | | | 1,000 | Ditto |
| | | | | | | | | | | 5,000 | Ditto |
| | | | | | | | | | | 4,100 | Ditto |
| | | | | | | | | | | 1,000 | Ditto |
| | | | | | | | | | | 1,000 | Magistrate |
| | | | | | | | | | | 1,500 | Ditto |
| | | | | | | | | | | 2,000 | Ditto |
| | | | | | | | | | | 1,600 | Subdivisional Officer, Rampur Hât |
| | | | | | | | | | | 800 | Superintendent of Police |
| | | | | | | | | | | 800 | Ditto |
| | | | | | | 7,500 | | | | 7,700 | Chairman, Suri Municipality |
| | | | | | | | | | | 700 | Collector |
| | | | | | | | | | | 20,000 | Ditto |
| | | | | | | | | | | 1,000 | Ditto |
| | | | | | | | | | | 100 | Ditto |
| | | | | | | | | | | 500 | Ditto |
| | | | | | | | | | | 500 | Ditto |
| 100 | 1,100 | 5,000 | 8,85,150 | 4,82,200 | 52,100 | 20,93,600 | 8,98,400 | 3,77,700 | 2,20,900 | 1,48,28,550 | |

| Ledger Folio No | Name of Person or Fund on whose behalf held | 3½ PER CENT | | | | 3 per cent of 1896-97 | 4 PER CENT | | 5 PER CENT | |
|---|---|---|---|---|---|---|---|---|---|---|
| | | 1842-43 | 1854-55 | 1865 | 1900-01 | | 1915-16 | 1916-17 | 1929-47 | 1945-55 |
| | | Rs | Rs | Rs | Rs. | Rs. | Rs | Rs | Rs | Rs |
| | Brought forward ... . | 21,400 | 1,14,800 | 83,53,700 | 1,99,300 | 1,41,600 | 33,800 | 59,600 | 3,36,700 | 5,51,200 |
| | BURDWAN DIVISION—*contd* | | | | | | | | | |
| | MIDNAPORE—*contd* | | | | | | | | | |
| 4251 | Siva Prosad Pal, Tahsildar | | . | | 500 | | | | . | |
| 4254 | Kailas Chandra Sasmal, Tahsildar . .. . | | | | 500 | | | | | |
| 4255 | Kunja Behari Bose, Cashier, Jhargram Estate | | 500 | 500 | | | | | | |
| 4256 | Indranarayan Das, Tahsildar | | . | | 500 | | | | | |
| 4257 | Janardan Patra, Tahsildar | | . | 500 | | | | | | .. |
| 4258 | Chakumohan Maity, Tahsildar | | | 500 | | | | | | |
| 4259 | Srikanta Nath De, Tahsildar, Tamluk | | | 200 | | | | | | |
| 4260 | Kumar Narayan Das | . | | 200 | | | . | | | |
| 4261 | Hem Chandra Ghosh, Naib, Basudebpur Ward's Estate . | . | | 1,000 | | | . | | | |
| 4262 | Refait Ali Khan, Treasurer, Bhagwanpur Khas Tahsil office . | | | | 500 | | | | | |
| 4264 | Narayani Dasi Fund . . | | | 2,000 | | | | | | 500 |
| 4265 | Karali Charan Sirkar Charitable Dispensary Fund .. | | | 6,000 | | | | | | |
| 4266 | Kedar Nath Mookerjee, Assistant Nazir | | | | | | | | | |
| 4267 | Upendra Narain Mazumdar's subscription to the Contai Dispensary ... .. . | | | | .. | 400 | | | | |
| 4268 | Pramotho Nath Mukherjee, Sub-Treasurer, Contai | | | 2,000 | | | | | | . |
| 4269 | Bepin Behari Sasmal and others, for payment of revenue | | | 4,000 | . | .. | | | | |
| 4270 | Pesh Kosh Compounding Fund (Jalamutha Estate) | . | | | | | | | | 8,300 |
| 4270 | Pesh Kosh Compounding Fund (Majnamutha Estate) | . | | . | | | | | | 6,900 |
| 4271 | Jhargram Ward's Estate | | | | | . | | | 1,000 | |
| 4280 | Miscellaneous case No 33 of 1911, Act VII of 1889 . | | | 1,000 | | . | | | | |
| 4281 | Rajendra Nath Deb, Nazir | | | 1,500 | . | | | .. | | .. |
| 4282 | Dhirendra Chandra Bhattacharji, Naib Nazir .. . | .. | .. | 100 | . | 200 | .. | | | |
| 4283 | Tara Prasad Maity, Nazir ... | .. | ... | .. | ... | 2,000 | | .. | .. | .. |
| 4284 | Sasadhar Das, Nazir | | .. | 1,500 | .. | . | .. | | . | .. |
| 4285 | Kumeda Ch Pal, Nazir, Garbetta . ... ... . | ... | .. | 500 | .. | ... | | .. | | . |
| 4286 | Abinash Chandra Ghose, Nazir, Ghatal Munsiff ... ... | . | . | 500 | ... | .. | .. | .. | . | ... |
| 4287 | Inanendralal Bose, Naib Nazir | ... | .. | 1,000 | .. | | .. | . | | ... |
| 4291 | Irpala Charitable Dispensary .. | . | ... | 12,500 | | .. | | . | . | |
| 4297 | Maisadal Raj Scholarship Fund | ... | . | 5,000 | . | .. | . | . | . | .. |
| 4298 | Harrison Scholarship ... .. | . | .. | 3,000 | ... | .. | . | 2,000 | .. | . |
| 4292 | Famine Relief Fund ... ... | ... | ... | 100 | .. | 3,600 | .. | | .. | ... |
| 4293 | Midnapore Charitable Trust Fund and Flood Relief Fund ... | .. | .. | 1,700 | ... | ... | ... | ... | ... | ... |
| 4294 | Ghatal Municipal Fund | ... | ... | .. | . | 1,000 | ... | .. | ... | ... |
| | Carried over .. | 21,400 | 1,15,300 | 83,99,000 | 2,01,300 | 1,48,200 | 33,800 | 61,600 | 3,37,700 | 5,61,700 |

| 5½ PER CENT | | | | 6 PER CENT | | | | | Debenture, and Railway shares | Total | Name of officer to whom interest is sent |
|---|---|---|---|---|---|---|---|---|---|---|---|
| 1922 | 1923 | 1925 | 1928 | 1926 | 1927 | 1930 | 1931 | 1932. | | | |
| Rs | Rs | Rs | Rs | Rs. | Rs | Rs | Rs | Rs | Rs | Rs | |
| 100 | 1,100 | 5,000 | 8,85,150 | 4,82,200 | 52,100 | 20,93,600 | 8,98,400 | 3,77,700 | 2,20,900 | 1,48,[illegible],350 | |
| | | | | | | | | | | 500 | Collector |
| | | | | | | | | | | 500 | Ditto |
| | | | | | | | | | | 1,000 | Ditto |
| | | | | | | | | | | 500 | Ditto |
| | | | | | | | | | | 500 | Ditto |
| | | | | | | | | | | 500 | Ditto |
| | | | | | | 500 | | | | 700 | Ditto |
| | | | | | | | | | | 200 | Ditto |
| | | | | | | | | | | 1,000 | Ditto |
| | | | | | | | | | | 500 | Ditto |
| | | | | | | | | | | 2,300 | Ditto |
| | | | | | | | | | | 6,000 | Ditto |
| | | | | | | 100 | | | | 100 | Ditto |
| | | | | | | | | | | 400 | Ditto |
| | | | | | | | | | | 2,000 | Ditto |
| | | | | | | | | | | 4,000 | Ditto |
| | | | | | | | | | | 3,300 | Ditto |
| | | | | | | | | | | 6,900 | Ditto |
| | | | | | | | | | | 1,000 | Ditto |
| | | | | | | | | | | 1,000 | District Judge. |
| | | | | | | | | | | 1,500 | Ditto |
| | | | | | | | | | | 800 | Ditto |
| | | | | | | | | | | 2,000 | Ditto |
| | | | | | | | | | | 1,500 | Ditto |
| | | | | | | | | | | 500 | Ditto |
| | | | | | | | | | | 500 | Ditto |
| | | | | | | | | | | 1,000 | Ditto |
| | | | | | | | | | | 12,500 | Magistrate |
| | | | | | | | | | | 5,000 | Chairman, District Board. |
| | | | | | | | | | | 5,000 | Ditto |
| | | | | | | | | | | 3,700 | Magistrate |
| | | | | | | | | | | 1,700 | Ditto |
| | | | | | | | | | | 1,000 | Ditto |
| 100 | 1,100 | 5,000 | 8,85,150 | 4,82,200 | 52,100 | 20,94,200 | 8,98,400 | 3,77,700 | 2,20,900 | 1,48,97,450 | |

| Ledger Folio No | Name of Person or Fund on whose behalf held | 3½ PER CENT | | | | 3 per cent of 1896-97 | 4 PER CENT | | 5 PER CENT | |
|---|---|---|---|---|---|---|---|---|---|---|
| | | 1842 43 | 1854-55 | 1865 | 1900-01 | | 1915-16. | 1916-17 | 1929-47 | 1945-55 |
| | | Rs | Rs | Rs | Rs | Rs | Rs | Rs | Rs | Rs |
| | Brought forward . | 21,400 | 1,15,300 | 83,99,000 | 2,01,300 | 1,48,800 | 33,800 | 61,600 | 3,37,700 | 5,61,700 |
| | BURDWAN DIVISION—*con'd* | | | | | | | | | |
| | MIDNAPORE—*concld* | | | | | | | | | |
| 4301 | Contai Dispensary . | | . | 2 100 | | 200 | ... | | . | |
| 4303 | Nandigram Dispensary | | | 5,200 | | | | | | |
| 4305 | Ramjibanpur Municipality | | | 1,500 | . | | | | | |
| 4306 | Lachman Prasad Garga Medal | | | 800 | | | | | | |
| 4307 | Ajodya Ram Khan's Scolarship .. | | | 3,700 | | | | | | |
| 4308 | Lochman Prasad Garga Scholarship . . | | | 2,000 | | | | | | . |
| 4309 | Martin Medal .. | | | 400 | | | . | | | |
| 4310 | Kali Prasanna Rai Chowdhury Medal | | . | 410 | | | | | . | |
| 4311 | Bipin Bihary Dutta Medal . | . | . | 400 | | . | | | | ... |
| 4312 | Harrison Medal . | | | 400 | | | | ... | | |
| 4313 | Midnapore High School | | | 52,100 | | | | | | |
| 4314 | Abhoy Charan Bose Memorial Fund . | | | 500 | | | | | | |
| 4319 | Raja of Mahishadal | | | 1,100 | | | | | | |
| 4320 | Sarat Chandra Chatterjee, Cashier, Etamogra subdivision | | | 500 | | 500 | | | . | |
| 4321 | Raja of Mahishadal for maintenance of Rajkhali new sluice and channels . | | | 500 | | | | | | |
| 4322 | Bijoy Gopal Roy, Toll Collector | | | 200 | | | | | | |
| 4324 | Bijoygobinda Sinha, Toll Collector .. | | | 100 | | | | . | | . |
| 4327 | Nishi Bhushan Chakrabarti, Accountant, Central Jail . | | | 200 | | | | | . | |
| 4330 | Kali Krishna Roy, Factory Overseer . | | | 500 | | | . | | | |
| 4330 | Bhupendra Nath Bose, Court Inspector .. | | | | | 500 | . | | | |
| | HOOGHLY | | | | | | | | | |
| 4332 | Girija Sankar Singha Roy, Manager, B L Mukharji's Estate . . | | | | | . | . | | | 600 |
| 4333 | Bihari Lal Mukherji's Endowment . | | | 1,61,000 | | | | | .. | |
| 4334 | Bonchee Behari Lal Mukharji's Estate ... . | | | 26,000 | | . | | | 2,000 | . |
| 4335 | Hooghly Public Library | | | 3,000 | | | | | . | |
| 4336 | Tara Chand Chattarji's Fund | | | 600 | | . | | . | .. | . |
| 4337 | Raja Gopendra Krishna Deb Memorial Fund | . | | 800 | . | . | | | . | |
| 4338 | Compensation money due to Chandra Moni Dasi . | . | | 500 | | | . | ... | | . |
| 4339 | Gopi Nath Dhur's Estate .. | 1,85,000 | . | 1,84,700 | . | | ... | . | .. | . |
| 4340 | Bhagabati Charan Sil, Treasurer, Serampore .. .. ... | . | ... | . | 2,000 | 500 | .. | ... | ... | . |
| 4341 | Hari Charan Mukerji, Khas Mahal Tahsildar. | .. | . | | | 500 | | | .. | .. |
| 4342 | Bara Emambara ... .. .. | ... | ... | 2,000 | | ... | ... | ... | .. | .. |
| | Carried over .. | 2,06,400 | 1,15,300 | 88,51,300 | 2,03,300 | 1,50,800 | 33,800 | 61,600 | 3,39,700 | 5,62,300 |

| 5½ PER CENT | | | | 6 PER CENT | | | | | Debentures and Railway shares | Total | Name of officer to whom interest is sent |
|---|---|---|---|---|---|---|---|---|---|---|---|
| 1922 | 1924 | 1925 | 1928 | 1926 | 1927 | 1930 | 1931 | 1932 | | | |
| Rs | Rs | Rs | Rs | Rs | Rs | Rs | Rs | Rs | Rs | Rs | |
| 100 | 1,100 | 5,000 | 8,85,150 | 4,82,200 | 52,100 | 20,91,200 | 8,98,400 | 3,77,700 | 2,20,900 | 1,48,97,150 | |
| | | | | | | 400 | | | | 3,000 | Subdivisional Officer Contai |
| | | | | | | | | | | 5,200 | Subdivisional Officer, Tamluk |
| | | | | | | | | | | 1,500 | Chairman of the Rampurhat Municipality |
| | | | | | | | | | | 800 | Chairman of the Midnapur Municipality |
| | | | | | | | | | | 3,500 | Ditto |
| | | | | | | | | | | 2,000 | Ditto |
| | | | | | | | | | | 400 | Ditto |
| | | | | | | | | | | 400 | Ditto |
| | | | | | | | | | | 400 | Ditto |
| | | | | | | | | | | 400 | Ditto |
| | | | | | | | | | | 52,100 | Ditto |
| | | | | | | | | | | 500 | Ditto |
| | | | | | | | | | | 1,100 | Executive Engineer, Cossye Division |
| | | | | | | | | | | 1,000 | Ditto |
| | | | | | | | | | | 500 | Ditto |
| | | | | | | | | | | 200 | Ditto |
| | | | | | | | | | | 100 | Ditto |
| | | | | | | | | | | 200 | Inspector General of Prisons, Bengal |
| | | | | | | | | | | 500 | Ditto |
| | | | | | | | | | | 500 | Superintendent of Police |
| | | | | 900 | | | | | | 1,500 | Collector |
| | | | | | | | | | | 1,61,000 | Ditto |
| | | | | | | | | | | 28,500 | Ditto |
| | | | | | | | | | | 3,500 | Ditto |
| | | | | | | | | | | 600 | Ditto |
| | | | | | | | | | | 800 | Ditto |
| | | | | | | | | | | 500 | Ditto |
| | | | | | | | | | | 3,69,700 | Ditto |
| | | | | | | | | | | 2,900 | Ditto |
| | | | | | | | | | | 300 | Ditto |
| | | | | | | | | | | 2,000 | Ditto |
| 100 | 1,100 | 5,000 | 8,85,150 | 4,83,100 | 52,100 | 20,91,600 | 8,98,400 | 3,77,700 | 2,20,900 | 1,55,12,650 | |

| Ledger Folio No | Name of Person or Fund on whose behalf held | 3½ PER CENT | | | | 3 per cent of 1896-97 | 4 PER CENT | | 5 PER CENT | |
|---|---|---|---|---|---|---|---|---|---|---|
| | | 1842-43 | 1854-55 | 1865 | 1900-01 | | 1915-16 | 1916-17 | 1929-47 | 1945-55 |
| | | Rs | Rs | Rs | Rs | Rs | Rs | Rs | Rs | Rs |
| | Brought forward | 2,06,400 | 1,15,300 | 88,51,300 | 2,03,400 | 1,50,800 | 33,800 | 61,600 | 3,39,700 | 5,62,300 |
| | BURDWAN DIVISION—*contd* | | | | | | | | | |
| | HOOGHLY—*contd* | | | | | | | | | |
| 4345 | Nagendra Chandra Ganguli, Tahsildar, B L Mukharji's Estate | | | 800 | | | | | | |
| 4346 | Maintenance of Bally Bathing Ghat | | | 5,100 | | | | | | |
| 4348 | Upendra Narain Mozumdar's Guptipara H E School Maintenance Fund | | | 5,500 | | | | | | |
| 4349 | Purna Chandra Addya, Treasurer | | 1,000 | | 7,600 | 3,000 | | | | |
| 4356 | Khariy Towhat Fund | | | 6,000 | | | | | | |
| 4358 | Uttarpara School | | | 800 | | | | | | |
| 4360 | Chinsura Poor | | | 45,000 | | | | | | |
| 4361 | Bepin Behari Mitra, Lessee, Begbellore lands | | | 500 | | | | | | |
| 4362 | Imambara Hospital Committee | | | 1,600 | | | | | | |
| 4364 | Nabakrishna Scholarship | | | 600 | | | | | | |
| 4365 | Konnagar Ripon Medal | | | 200 | | | | | | |
| 4366 | River Thompson Prize Fund | | | 1,200 | | | | | | |
| 4367 | Uttarpara School Scholarship Trust Fund | | | 23,000 | | | | | | |
| 4368 | Ganga Narain Gupta's Free Studentship | | | 1,000 | | | | | | |
| 4369 | Kola Union | | | 400 | | | | | | |
| 4370 | Jugal Kishore Sett, Cashier | | | 100 | | | | | | |
| 4371 | Sukdeb Singh, Ferry Farmer | | | 22,000 | 500 | | | | | |
| 4372 | Mongal Das, Ferry Farmer | | | 1,500 | | | | | | |
| 4379 | Hooghly Branch Dufferin Hospital Fund | | | 2,300 | | | | | | |
| 4381 | Rani Kattyani Free Studentship | | | 9,500 | | | | | | |
| 4382 | Thwayte's Memorial | | | 1,200 | | | | | | |
| 4385 | Zamindari Scholarship Fund | | | 5,000 | | | | | | |
| 4386 | Doyal Chand Siromoni Trust Fund | | | 600 | | | | | | |
| 4387 | Shib Chandra Medal Fund | | | 300 | | | | | | |
| 4388 | Surendra Nath Mukerji Fund | | | 4,000 | | | | | | |
| 4389 | Annapurna Debi and Raj Lakami Debi Fund | | | 300 | | | | | | |
| 4390 | Chandra Kumar and Kadambini Free Studentship | | | 300 | | | | | | |
| 4391 | Bimala Debi's Fund | | | 600 | | | | | | |
| 4392 | Mohesh Ashutosh Medal and Scholarship | | | | | | | | 3,100 | |
| | Carried over | 2,06,400 | 1,16,300 | 89,88,200 | 2,11,400 | 1,53,800 | 33,800 | 61,600 | 3,42,800 | 5,62,300 |

| 5½ per cent | | | | 6 per cent | | | | | Debentures and Railway shares | Total | Name of officer to whom interest is sent |
|---|---|---|---|---|---|---|---|---|---|---|---|
| 1922 | 1923 | 1925 | 1928 | 1926 | 1927 | 1930 | 1931 | 1932 | | | |
| Rs | Rs | Rs | Rs | Rs | Rs | Rs | Rs | Rs | Rs | Rs | |
| 100 | 1,100 | 5,000 | 8,85,150 | 4,83,100 | 52,100 | 20,94,600 | 8,98,400 | 3,77,700 | 2,20,900 | 1,55,12,650 | |
| | | | | | | | | | | 300 | Collector |
| | | | | | | | | 1,300 | | 6,400 | Ditto |
| | | | | | | | | | | 5,500 | Ditto |
| | | | | | | | | | | 11,600 | Ditto |
| | | | | | | | | | | 6,000 | Committee of Management, Hughli Imambara |
| | | | | | | | | | | 800 | Head Master |
| | | | | | | | | | | 14,000 | Local Agent |
| | | | | | | | | | | 500 | Ditto |
| | | | | | | | | | | 1,600 | Ditto |
| | | | | | | | | | | 600 | Magistrate |
| | | | | | | | | | | 200 | Ditto |
| | | | | | | | | | | 1,200 | Ditto |
| | | | | | | | | 5,600 | | 28,600 | Ditto |
| | | | | | | | | 400 | | 1,400 | Ditto |
| | | | | | | | | | | 400 | Ditto |
| | | | | | | | | | | 100 | Ditto |
| | | | | | | | | | | 22,500 | Ditto |
| | | | | | | | | | | 1,500 | Ditto |
| | | | | | | | | | | 2,400 | Magistrate and Chairman of the Dufferin Committee |
| | | | | | | | | | | 9,500 | Principal, Hooghly College |
| | | | | | | | | | | 1,200 | Ditto |
| | | | | | | | | | | 5,000 | Ditto |
| | | | | | | | | | | 600 | Subdivisional Officer, Serampore |
| | | | | | | | | | | 300 | Ditto |
| | | | | | | | | | | 4,000 | Ditto |
| | | | | | | | | | | 300 | Ditto |
| | | | | | | | | | | 300 | Ditto |
| | | | | | | | | | | 600 | Ditto |
| | | | | | | | | | | 3,100 | Ditto |
| 100 | 1,100 | 5,000 | 8,85,150 | 4,83,100 | 52,100 | 20,94,600 | 8,98,400 | 3,85,000 | 2,20,900 | 1,57,62,650 | |

| Ledger Folio No | Name of Person or Fund on whose behalf held | 3½ PER CENT | | | | 3 per cent of 1896-97 | 4 PER CENT | | 5 PER CENT. | |
|---|---|---|---|---|---|---|---|---|---|---|
| | | 1842-43 | 1854-55. | 1865 | 1900 01 | | 1915-16 | 1916-17 | 1929-47. | 1945-55 |
| | | Rs | Rs | Rs | Rs | Rs | Rs | Rs | Rs | Rs |
| | Brought forward | 2,06,400 | 1,16,800 | 89,88,200 | 2,11,400 | 1,53,800 | 33,800 | 61,600 | 3,42,800 | 5,62,300 |
| | BURDWAN DIVISION—*contd* | | | | | | | | | |
| | HOOGHLY—*contd* | | | | | | | | | |
| * 4396 | Uttarpara Dispensary | | | 1,500 | | | | | | |
| 4399 | Jogendra Nath Dey, Nazir | | | | . | 1,000 | | | .. | |
| 4401 | Satish Chandra Chatterji, Nazir | ... | | | | 1,000 | . | | | |
| 4402 | Nepal Chandra Ghosh, Nazir, Howrah | . | | 1,700 | | | | | | |
| 4403 | Surath Chandra Nandy, Nazir, Serampore | . | | 1,600 | | | | | | |
| 4404 | Prokash Chandra Sen, Nazir, Arambagh Munsifi . | | . | 700 | . | | | | | . |
| 4405 | Act VIII, case No 57 of 1920 | | | | 4,300 | | | | . | |
| 4409 | Hemangini Debi, in case No 56 of 1912 | . | | 1,700 | | | | | | |
| 4410 | Maintainance of Sabitri Dasi in suit No 280 of 1914 | | | 4,500 | | | | | | |
| 4407 | Nalini Nath Ghose, Head Assistant . | | | | | | | | | |
| 4408 | Bijay Kumar Ghosal, Sub-Inspector . | | | | | 500 | | | | |
| 4412 | Bhanderhati Charitable Dispensary .. | | | 5,000 | | | | | | |
| 4413 | B K Roy Trust Fund for maintenance of Daghora Dispensary | . | 5,000 | | . | | | . | . | |
| 4414 | Haripal Dispensary | | | 25,000 | | | | | | |
| 4414 | Basua Dispensary | | . | | | | | | | |
| 4415 | Gourbhushan Chandra Ferry Farmer | 1,000 | | { 3,000 * 1,000 (1879) | | | | | | |
| 4416 | Bilsora Dispensary Fund | | | 36,000 | 2,000 | | | | 10,000 | |
| 4418 | Bandyabati Municipality | | 200 | 600 | 100 | | | | . | |
| 4421 | Surendra Krishna Ghosh, Tax-daroga and Cashier | | | 200 | 300 | | | | | |
| 4422 | Siddeswar Banerji | | | 200 | | | | | | ... |
| 4425 | Konnagar Free Primary School Fund .. .. | | | 10,000 | . | | | | | |
| 4426 | Survey work of Rishra-Konnagar Municipality | 1,000 | | | . | | | | . | |
| 4427 | Rishra-Konnagar Municipality | | .. | | | | | | | |
| 4429 | Drainage Fund of Bhadreswar Municipality . . | .. | | 15,400 | | . | | | . | |
| 4430 | Survey Fund of Bhadreswar Municipality ... . | . | . | 1,100 | . | . | | ... | | |
| 4432 | Drainage Fund of Champdany Municipality . . ... | | | 15,500 | ... | | . | | . | ... |
| 4433 | Survey Fund of Champdany Municipality .. . .. | .. | | 900 | .. | | | . | . | . |
| 4435 | Anjakali Studentship Fund | ... | | 600 | .. | .. | | . | .. | . |
| 4436 | Burdwan Division Relief Fund | . | ... | 2,500 | ... | ... | .. | ... | ... | ... |
| | Carried over .. | 2,08,400 | 1,21,500 | 91,16,000 | 2,18,100 | 1,56,300 | 33,800 | 61,600 | 3,52,800 | 5,62,300 |

* Represent 3½ per cent. loan of 1879

| 5½ PER CENT | | | | 6 PER CENT | | | | | Debentures and Railway shares | Total | Name of officer to whom interest is sent |
|---|---|---|---|---|---|---|---|---|---|---|---|
| 1927 | 1923 | 1925 | 1928 | 1926 | 1927 | 1930 | 1931 | 1932 | | | |
| Rs | Rs | Rs | Rs | Rs | Rs. | Rs | Rs | Rs | Rs | Rs | |
| 100 | 1,100 | 5,000 | 8,85,150 | 4,83,100 | 52,100 | 20,94,600 | 8,98,400 | 3,85,000 | 2,20,900 | 1,57,02,050 | |
| | | | | | | | | | | 1,500 | Civil Surgeon of Serampore |
| | | | | | | | | | | 1,000 | District Judge |
| | | | | | | | | | | 1,000 | Ditto |
| | | | | | | | | | | 1,700 | Ditto |
| | | | | | | | | | | 1,600 | Ditto |
| | | | | | | | | | | 700 | Ditto |
| | | | | | | | | | | 4,800 | Ditto |
| | | | | | | | | | | 1,700 | Sub-Judge |
| | | | | | | | | | | 4,500 | Sub Judge, 2nd Court |
| | | | | | | 300 | | | | 300 | Deputy Inspector General of Police, Burdwan Range |
| | | | | | | | | | | 500 | Superintendent of Police |
| | | | | | | | | | | 5,000 | Chairman, District Board |
| | | | | | | | | | | 5,000 | Ditto |
| | | | | | | | | | | 25,000 | Ditto |
| | | | | | | | 10,000 | | | 10,000 | Ditto |
| | | | | | | | | | | 5,000 | Ditto |
| | | | 11,000 | | | | | | 3,500 | 62,500 | Ditto |
| | | | | | | | | | | 900 | Chairman, Baidyabati Municipality |
| | | | | | | | | | | 500 | Ditto |
| | | | | | | | | | | 200 | Ditto |
| | | | | | | | | | | 10,000 | Chairman, Rishra-Konnagar Municipality |
| | | | | | | | | | | 1,000 | Ditto |
| | | | | 5,000 | | | | | | 5,000 | Ditto |
| | | | | | | | | | | 15,400 | Chairman, Bhadreswar Municipality |
| | | | | | | | | | | 1,100 | Ditto |
| | | | | | | | | | | 15,500 | Chairman, Champdany Municipality |
| | | | | | | | | | | 900 | Ditto |
| | | | | | | | | | | 600 | Managing Committee, Konnagar Government H E School |
| | | | | | | | | | | 2,500 | Commissioner, Burdwan Division |
| 100 | 1,100 | 5,000 | 8,96,150 | 4,88,100 | 52,100 | 20,94,900 | 9,08,400 | 3,85,000 | 2,24,400 | 1,58,42,050 | |

| Ledger Folio No | Name of Person or Fund on whose behalf held | 3½ PER CENT | | | | 3 per cent of 1896-97 | 4 PER CENT. | | 5 PER CENT. | |
|---|---|---|---|---|---|---|---|---|---|---|
| | | 1812 43 | 1854-55 | 1865 | 1900 01 | | 1915-16 | 1916-17 | 1929-47 | 1945-55 |
| | | Rs | Rs | Rs | Rs | Rs | Rs | Rs | Rs | Rs |
| | Brought forward | 2,08,400 | 1,21,500 | 91,16,900 | 2,18,100 | 1,56,300 | 33,800 | 61,600 | 3,52,800 | 5,62,800 |
| | BURDWAN DIVISION—*contd* | | | | | | | | | |
| | HOWRAH | | | | | | | | | |
| 4438 | Haripada Moitra and Nani Bala Debya for protection of their estate from sale | | | 100 | | | | | | |
| 4439 | Girija Charan Basu, Treasurer, Uluberia | | | | | | | | 500 | . |
| 4440 | Manmatha Kumar Bose, Treasurer | | | 5,000 | | | | . | | |
| 4442 | Naba Nepal Ghose, settlement-holder | | | 100 | | . | | | | . |
| 4443 | Harish Chandra Chakraverti, Head Clerk, Uluberia subdivision | | | 500 | | | | | | |
| 4444 | Upendra Nath Chatterji, Excise Head Clerk | | | | 500 | | | | | |
| 4445 | Kalipada Das, Settlement-holder | 1,400 | 900 | 7,500 | 6,200 | . | | | | |
| 4448 | Haradhone Roy, Nazir | | | 1,000 | | | | | | |
| 4451 | Edward Coronation Medal Fund | | | 500 | | | | | | |
| 4453 | Endowment of Jiban Krishna Ray for maintenance of Amta Dispensary | | | 4,000 | | | | | | |
| 4454 | Endowment of Kali Prasanna Ray for maintenance of a dispensary at Mohiari | | | 12,000 | | | | | | |
| 4455 | Endowment for the maintenance of a Charitable Dispensary at Joypur | | | | | | | | | |
| 4456 | Haridhan Mukherji, Assistant Accountant | | | | | 100 | | | | |
| 4457 | Saltikri Charitable Dispensary Maintenance Fund | | | | | | | | | |
| 4458 | Trust Fund for the maintenance of Jadunath Ward, Amta Charitable Dispensary | | | 2,500 | | | | | | |
| 4462 | Namai Charan Datta Free Studentship Fund | | ... | | 500 | | .. | | | |
| 4463 | Thakur Das Chatterji Medal Fund | | | | | 1,000 | | | | . |
| 4464 | Krishna Chandra Ghosh Medal Fund | | | | | | | | | |
| 4465 | Kailash Moyi Dasi Prize Fund | | | . | | | | . | | . |
| 4466 | Duke Library | | | 10,000 | .. | | . | | | |
| 4467 | Hara Sundari Dasi Prize Fund | | | | | | | | .. | |
| 4468 | Narsing Dutt Medal Fund | | | | | 1,000 | | | | |
| 4471 | Ram Narayan Basu English School Fund, care of Magistrate, Howrah | .. | . | . | . | .. | | | | . |
| 4473 | Ashutosh Lahiri, Mess Superintendent | | .. | . | | 500 | . | | . | .. |
| 4475 | Bholanath Sarkar, Cash Sarkar | . | | 500 | | .. | ... | | . | .. |
| 4476 | Sarat Chandra Ghosh, Store Clerk | .. | ... | .. | | 300 | . | .. | . | ... |
| 4477 | Haradhone Halder, Cashier | .. | . | .. | | 2,500 | . | . | | ... |
| 4480 | Radhamadhab Chatterjee, Head Clerk | .. | 500 | ... | ... | ... | . | .. | ... | ... |
| | Carried over | 2,09,800 | 1,22,900 | 91,60,600 | 2,25,800 | 1,61,700 | 33,800 | 61,600 | 3,52,800 | 5,62,800 |

| 5½ per cent | | | | 6 per cent | | | | | Debentures and Railway shares | Total | Name of officer to whom interest is sent. |
|---|---|---|---|---|---|---|---|---|---|---|---|
| 1922 | 1923 | 1925 | 1928 | 1926 | 1927 | 1930 | 1931 | 1932 | | | |
| Rs. | Rs | Rs | Rs | Rs | Rs | Rs | Rs | Rs | Rs | Rs | |
| 100 | 1,100 | 5,000 | 8,96,150 | 4,88,100 | 52,100 | 20,94,900 | 3,08,400 | 3,85,000 | 2,24,400 | 1,58,86,[illegible]0 | |
| | . | | | | | . | | | | 100 | Collector |
| | | .. | | | . | | | | | 500 | Ditto |
| | | . | .. | | | | | | | 5,000 | Ditto |
| ... | | . | . | | | | | | | 100 | Ditto |
| | . | .. | | | | . | | | | 500 | Ditto |
| ... | ... | | . | | | | | | | 500 | Ditto |
| | | | | . | | | . | | | 10,000 | Ditto |
| | | | | | | | | | | 1,000 | District Judge |
| ... | | | | | | | | | | 500 | Subdivisional Officer, Uluberia |
| | | ... | | | | | | . | | 4,000 | Chairman, District Board |
| | . | | | | | .. | | | | 12,000 | Ditto |
| | | . | 20,000 | . | | | . | . | | 20,000 | Ditto |
| . | | . | . | | . | | . | | | 100 | Ditto. |
| | | .. | | | ... | | . | .. | 42,000 | 42,000 | Ditto |
| . | . | .. | | | | | .. | | | 2,500 | Ditto |
| . | .. | . | . | . | . | . | | | | 500 | Magistrate. |
| . | . | ... | | | | | | | | 1,000 | Ditto |
| . | | | | | | . | . | | 200 | 200 | Ditto |
| . | . | . | | | . | | | | 100 | 100 | Ditto |
| . | | | | | | | | ... | | 10,000 | Ditto |
| | . | | | . | | | . | | 100 | 100 | Ditto |
| . | . | .. | ... | . | . | | . | | | 1,000 | Ditto |
| .. | | . | 1,000 | . | ... | 2,000 | .. | ... | | 3,000 | Trustees of the Fund |
| ... | . | .. | .. | . | . | . | .. | . | | 500 | Principal, Bengal Engineering College |
| ... | .. | ... | .. | .. | ... | ... | ... | .. | .. | 500 | Ditto |
| ... | .. | ... | | ... | ... | .. | ... | .. | . | 300 | Ditto |
| ... | ... | .. | | ... | . | .. | . | .. | . | 2,500 | Ditto |
| ... | ... | ... | ... | .. | ... | ... | ... | ... | . | 500 | Superintendent of Police, E I Railway, Howrah |
| 100 | 1,100 | 5,000 | 9,17,150 | 4,88,100 | 52,100 | 20,96,900 | 3,08,400 | 3,85,000 | 2,56,800 | 1,60,11,950 | |

| Ledger Folio No. | Name of Person or Fund on whose behalf held | 3½ PER CENT. | | | | 3 per cent of 1896-97 | 4 PER CENT | | 5 PER CENT | |
|---|---|---|---|---|---|---|---|---|---|---|
| | | 1842-43 | 1854-55 | 1865 | 1900-01 | | 1915-16. | 1916-17 | 1929-47 | 1945-55. |
| | | Rs | Rs | Rs | Rs | Rs | Rs | Rs | Rs | Rs |
| | Brought forward ... | 2,09,800 | 1,22,900 | 91,60,600 | 2,25,300 | 1,61,700 | 33,800 | 61,600 | 3,53,300 | 5,62,300 |
| | RAJSHAHI DIVISION | | | | | | | | | |
| | RAJSHAHI | | | | | | | | | |
| 4497 | Prasanna Nath Rai Fund | .. | .. | 1,07,400 | . | ... | .. | . | | .. |
| 4498 | Rani Monmohini's aid to the Law classes of Rajshahi College ... . . | . | ... | 22,700 | . | | | | . | ... |
| 4499 | Rajshahi College . . | | | 1,50,300 | | .. | | | .. | |
| 4500 | Compensation money for land taken up for Dadapur Road | | | 4,000 | | .. | | . | | .. |
| 4501 | Sashi Shekar Chakrabarti, Head Clerk and Sub-Treasurer Natore . . . . | . | 1,000 | ... | ... | . | . | | . | |
| 4502 | Compensation money for land taken up for police-station | | .. | 2,600 | .. | . | .. | | | |
| 4503 | Mohini Mohon Ghose, Treasurer | 5,000 | . | 10,000 | | | | | | .. |
| 4504 | Akshoy Giri Padak Trust Fund | | . | 500 | | | .. | | . | .. |
| 4505 | Rukmini Kanta Bhattacharji, Sanskrit Tol Fund at Naogaon | . | .. | 22,500 | ... | .. | | | .. | . |
| 4511 | Permission case No 48 of 1908, Act V ... ... .. ... | .. | .. | | | .. | .. | | | |
| 4512 | Avinash Chandra Chowdhury, common manager in case No 9 of 1904 .. ... ... .. | .. | | 1,000 | | .. | . | . | | . |
| 4513 | Janoki Nath Mukherji, Nazir, Nawabgunge ... .. .. | .. | ... | 300 | . | 500 | | .. | .. | |
| 4514 | Radhikamohan Karmokar, Nazir, Noagaon Munsifi . | .. | .. | 500 | 500 | .. | ... | . | ... | .. |
| 4515 | Land Acquisition case No 23 of 1912 ... .. ... ... | ... | ... | 1,300 | ... | ... | ... | . | . | .. |
| 4516 | Compensation money due to Padma Kumari Dasya of Gopalpur in L A case . | ... | .. | 100 | . | . | . | .. | .. | .. |
| 4517 | Act V, case No 84 of 1913 .. | .. | ... | 10,000 | ... | ... | .. | .. | ... | ... |
| 4518 | Maulvi Sharfuddin Ahmed, Nazir ... . ... ... | 1,000 | ... | ... | .. | ... | ... | ... | ... | |
| 4521 | Messrs Das-Gupta, Sarkar & Co ... ... ... . | | ... | ... | ... | . | ... | ... | . | ... |
| 4522 | Mayo Memorial Fund .. ... | ... | ... | 2,800 | ... | ... | .. | .. | .. | .. |
| 4523 | Suresh Chandra Lahiri, Cashier | ... | .. | 500 | ... | ... | ... | ... | ... | .. |
| 4524 | Mohini Mohan Rai Prize . | ... | .. | 4,700 | .. | ... | ... | . | ... | .. |
| 4527 | Rajkumar Sarkar's Prize ... | ... | ... | 100 | ... | ... | ... | .. | ... | .. |
| 4528 | Promotha Nath Rai Fund ... | ... | .. | 6,300 | .. | ... | .. | ... | | .. |
| | RANGPUR | | | | | | | | | |
| 4533 | Bhubaneswari Devi for protection of estate from sale ... | .. | . | 500 | ... | 500 | ... | ... | ... | ... |
| 4534 | Gaibandha High English School | ... | ... | 6,000 | ... | ... | ... | ... | ... | ... |
| 4535 | Victoria Scholarship ... ... | ... | ... | 16,400 | .. | ... | ... | ... | ... | ... |
| 4536 | Rangpur School Maintenance Fund .. ... ... ... | ... | ... | 3,000 | ... | ... | ... | ... | ... | ... |
| 4537 | Rani Anandamoyi's Scholarship | ... | ... | 6,300 | ... | .. | ... | ... | ... | ... |
| 4538 | Dhaneswar Das, Tahsildar, Nowbabas .. ... ... | ... | ... | 500 | .. | ... | ... | ... | ... | ... |
| 4539 | Hara Chandra Das, Naib, Saptana ... ... .. ... | .. | .. | 500 | ... | .. | ... | .. | ... | .. |
| | Carried over ... | 2,15,800 | 1,23,900 | 95,41,900 | 2,25,800 | 1,62,700 | 33,800 | 61,600 | 3,53,300 | 5,62,300 |

| 5½ PER CENT | | | | 6 PER CENT | | | | | Debentures and Railway shares | Total | Name of officer to whom interest is sent |
|---|---|---|---|---|---|---|---|---|---|---|---|
| 1922 | 1923 | 1925 | 1928 | 1926 | 1927 | 1930 | 1931 | 1932 | | | |
| Rs | Rs | Rs | Rs | Rs | Rs | Rs | Rs | Rs | Rs | Rs | |
| 100 | 1,100 | 5,000 | 9,17,150 | 4,88,100 | 52,100 | 20,96,900 | 9,08,400 | 3,85,000 | 2,66,800 | 1,60,11,950 | |
| .. | | | . | . | .. | | | ... | . | 1,07,400 | Collector |
| . | . | .. | | . | .. | | . | . | | 22,700 | Ditto |
| | ... | . | | | | .. | | | | 1,50,300 | Ditto |
| . | | | ... | | | | . | | | 1,000 | Ditto |
| | ... | . | | | | . | ... | .. | | 1,000 | Ditto |
| | | . | | | | | | .. | | 2,500 | Ditto |
| .. | | | | | | | | | | 15,000 | Ditto |
| | | | | | . | | . | . | | 500 | Ditto |
| | | | ... | .. | . | | | . | | 22,500 | Ditto |
| .. | .. | | . | | . | 60,500 | .. | | | 60,500 | District Judge |
| . | | . | ... | .. | | .. | . | | | 1,000 | Ditto |
| | . | .. | | . | | .. | | . | | 800 | Ditto |
| | .. | . | . | .. | . | | .. | . | | 1,000 | Ditto |
| | ... | ... | . | .. | .. | ... | . | .. | .. | 1,300 | Ditto |
| | | | . | . | ... | | | . | | 100 | Ditto |
| . | ... | | . | .. | . | .. | .. | | . | 10,000 | Ditto |
| . | .. | .. | | .. | .. | ... | 900 | . | ... | 1,900 | Ditto |
| ... | . | . | . | 6,100 | .. | | .. | ... | . | 6,100 | Executive Engineer, Rajshahi Division |
| | ... | . | | | .. | . | .. | .. | | 2,800 | Principal, Rajshahi College |
| . | . | . | ... | ... | ... | . | .. | | ... | 500 | Ditto |
| .. | .. | . | | | . | . | | | | 4,700 | Ditto |
| ... | .. | . | | .. | .. | . | .. | | .. | 100 | Chairman, District Board |
| . | ... | .. | | . | ... | ... | . | . | .. | 6,300 | Ditto |
| ... | .. | ... | . | .. | ... | . | . | . | .. | 1,000 | Collector |
| . | ... | .. | .. | ... | . | ... | ... | .. | . | 6,000 | Ditto |
| | ... | .. | .. | ... | . | .. | ... | .. | .. | 16,400 | Ditto |
| ... | ... | .. | ... | . | ... | ... | ... | .. | ... | 3,000 | Ditto |
| ... | ... | ... | ... | ... | ... | ... | ... | ... | ... | 6,800 | Ditto |
| ... | ... | ... | ... | ... | ... | .. | ... | ... | ... | 500 | Ditto |
| ... | ... | ... | ... | ... | ... | ... | ... | .. | ... | 500 | Ditto |
| 100 | 1,100 | 5,000 | 9,17,150 | 4,94,200 | 52,100 | 21,57,400 | 9,09,300 | 3,85,000 | 2,66,800 | 1,64,69,250 | |

| Ledger Folio No | Name of Person or Fund on whose behalf held | 3½ PER CENT | | | | 3 per cent of 1896-97 | 4 PER CENT | | 5 PER CENT | |
|---|---|---|---|---|---|---|---|---|---|---|
| | | 1842-43 | 1854-55 | 1865 | 1900-01 | | 1915-16 | 1916-17 | 1929-47 | 1945-55 |
| | | Rs | Rs | Rs | Rs | Rs | Rs | Rs. | Rs. | Rs |
| | Brought forward | 2,15,800 | 1,23,900 | 95,41,900 | 2,25,800 | 1,62,700 | 33,800 | 61,600 | 3,53,300 | 5,62,800 |
| | RAJSHAHI DIVISION —contd | | | | | | | | | |
| | RANGPUR—contd | | | | | | | | | |
| 4546 | Rangpur School | | | 18,900 | . | | | . | | |
| 4548 | Bhaba Sundari Debi Chaudurani | .. | | 2,400 | .. | | | | | .. |
| 4549 | Bipin Chandra Chatterji, Nazir, Kurigram, Munsifi . | . | 500 | | | . | | | | ... |
| 4550 | Krishna Chandra Mukherji, Naib-Nazir, Kurigram Munsifi | . | | 500 | | . | | | . | |
| 4551 | Sasi Bhusan Sen, Nazir ... | .. | . | 1 000 | .. | ... | .. | | . | |
| 4552 | Jagadis Nath Mukerji, Nazir | .. | . | 1,500 | ... | .. | | . | | . |
| 4553 | Sahaid Bux, Naib-Nazir | ... | | 500 | | | . | | .. | |
| 4554 | Nritya Hari Shaha, minor | | . | 7,000 | . | | . | | . | .. |
| 4555 | Prafulla Nath Das Gupta, Naib-Nazir, Kurigram Munsifi | .. | | | | ... | . | | ... | . |
| 4556 | Girijakanta and Krishna Kanto Chaudhuri, minors . | . | .. | 5,700 | . | .. | . | | . | |
| 4557 | Ramesh Chandra Roy, Nazir | . | | 1,500 | | | | | | |
| 4560 | Newbery Scholarship | | | 800 | .. | | | ... | . | .. |
| 4562 | Rangpur Dispensary | . | .. | 16,500 | | | | | ... | .. |
| 4564 | Alikuri Bridge Trust | | .. | 5,600 | | | | . | 1,400 | ... |
| | DINAJPUR | | | | | | | | | |
| 4566 | Girija Mohan Neogi, Treasurer | | | 10,000 | . | . | .. | . | | .. |
| 4567 | Ramesh Chandra Das, Manager, Churaman Ward's Estate . | | ... | 1,500 | | | . | | | . |
| 4568 | Prafulla Kumar Boral, minor proprietor of Ward's Estate of Jagat Chandra Boral .. | . | .. | 1,000 | | | . | . | 725 | |
| 4568 | Atul Chandra Boral, Ward of H C Boral Estate | . | | . | . | . | .. | ... | 1,050 | . |
| 4569 | Sarat Satish and Ramesh Chandra Gupta, minors | .. | ... | | | .. | . | . | 8,150 | .. |
| 4570 | Kedar Nath Ghatak, manager, Majdha Ward's Estate | . | | 1,000 | . | .. | . | . | ... | ... |
| 4571 | Manindra and Nitindra Chandra Choudhury, minors, Majdia Estate .. . | .. | . | 3,000 | | .. | ... | ... | ... | ... |
| 4573 | P C Gupta's Ward's Estate | .. | ... | 10,600 | . | .. | . | ... | ... | ... |
| 4574 | Banku Behari Das, General Manager, Ward's Estate . | .. | .. | 500 | ... | ... | . | . | . | ... |
| 4575 | Nanda Dulal Dhar and others, minors ... .. | ... | .. | ... | ... | .. | .. | | 1,500 | .. |
| 4579 | Asutosh Chatterji, Nazir, Judge's Court . | ... | ... | 1,000 | .. | 2,500 | ... | .. | ... | ... |
| 4480 | Dindayal Acharyya, Nazir, Raiganj Munsifi .. .. ... ... | ... | ... | ... | 1,400 | ... | ... | ... | ... | 1,000 |
| | Carried over ... | 2,15,800 | 1,24,400 | 96,32,600 | 2,27,200 | 1,65,200 | 33,800 | 61,600 | 3,61,125 | 5,63,800 |

| 5½ PER CENT. | | | | 6 PER CENT | | | | | Debentures and Railway shares | Total | Name of officer to whom interest is sent |
|---|---|---|---|---|---|---|---|---|---|---|---|
| 1922 | 1923 | 1925 | 1928 | 1926 | 1927 | 1930 | 1931 | 1932 | | | |
| Rs | Rs | Rs | Rs | Rs | Rs | Rs | Rs | Rs | Rs | Rs | |
| 100 | 1,100 | 5,000 | 9,17,150 | 4,94,200 | 52,100 | 21,57,400 | 9,09,300 | 3,85,000 | 2,66,800 | 1,64,69,250 | |
| | | | | | | | | . | | 18,900 | Head Master, Government School |
| | | . | | | | .. | | | | 2,400 | District Judge |
| . | | | | | | | | | | 500 | Ditto |
| | . | | . | . | | | | | | 500 | Ditto |
| | . | | | . | | | | | | 1,000 | Ditto |
| | | | | | | | | . | | 1,500 | Ditto |
| | | | | | . | | | | | 500 | Ditto |
| | | | | | | | | | | 7,000 | Ditto |
| | .. | | . | . | .. | 500 | | | . | 500 | Ditto |
| ... | | | . | .. | | | | | | 5,700 | Ditto |
| | . | .. | | . | | . | | | | 1,500 | Ditto |
| | . | | | | .. | . | . | | | 800 | Magistrate |
| . | . | | | . | | . | . | . | | 16,500 | Chairman of the Municipality |
| | | | | | | | | | . | 7,000 | Chairman, District Board |
| | | | | | | ... | | ... | . | 10,000 | Collector |
| | | | . | | | . | . | . | . | 1,500 | Ditto |
| . | . | | | | . | . | . | . | | 1,725 | Ditto |
| .. | .. | | . | | ... | ... | | | | 1,050 | Ditto |
| . | ... | . | | | ... | .. | ... | | . | 3,150 | Ditto |
| .. | ... | | .. | | . | ... | .. | | . | 1,000 | Ditto |
| . | .. | .. | .. | ... | .. | 600 | ... | | | 3,600 | Ditto |
| | .. | .. | . | . | ... | . | .. | ... | . | 10,600 | Ditto |
| .. | .. | ... | ... | ... | ... | ... | ... | .. | . | 500 | Ditto |
| .. | ... | ... | ... | .. | ... | ... | . | . | . | 1,500 | Ditto |
| . | ... | ... | ... | .. | ... | .. | . | . | ... | 3,500 | District Judge |
| ... | ... | ... | ... | ... | ... | .. | .. | ... | ... | 2,400 | Ditto |
| 100 | 1,100 | 5,000 | 9,17,150 | 4,94,200 | 52,100 | 21,58,500 | 9,09,300 | 3,85,000 | 2,66,800 | 1,6[illegible],74,075 | |

| Ledger Fo 10 No | Name of Person or Fund on whose behalf held | 3½ PER CENT | | | | 3 per cent of 1896-97. | 4 PER CENT. | | 5 PER CENT | |
|---|---|---|---|---|---|---|---|---|---|---|
| | | 1842-43 | 1854-55 | 1865 | 1900-01 | | 1915-16 | 1916-17 | 1939-47 | 1945-55 |
| | | Rs | Rs | Rs | Rs | Rs | Rs | Rs | Rs | Rs |
| | Brought forward | 2,15,800 | 1,24,400 | 96,32,400 | 2,27,200 | 1,65,200 | 33,800 | 61,600 | 3,61,125 | 5,63,300 |
| | RAJSHAHI DIVISION—*contd* | | | | | | | | | |
| | DINAJPUR—*concld* | | | | | | | | | |
| 4583 | Rakhaldas Ganguli, Nazir, Thakurgaon Munsifi | .. | | | | 2,500 | . | .. | ... | .. |
| 4584 | Munshi Requibuddin Ahmed, Naib Nazir ... | . | 500 | .. | . | . | | | | .. |
| 4585 | Jamiruddin Ahmed, Nazir | | 1,200 | 300 | . | . | .. | | | .. |
| 4588 | Coronation Medal Fund | | | 300 | | . | . | | | ... |
| 4589 | Sir Lancelot Hare Medal Fund | .. | | 1,000 | .. | | | | | . |
| 4590 | Dakhina Charan Ganguly, Head Clerk | | | 500 | | | | | | .. |
| | BOGRA | | | | | | | | | |
| 4591 | Mahamed Azizal Bari, surety of Surendra Nath Sanyal, Treasurer | | 10,000 | | ... | . | .. | | . | |
| 4593 | Syed Abdus Sovan Scholarship | ... | . | 6,900 | | | | | . | . |
| 4594 | Bhuban Ambica Memorial Fund | | . | 500 | . | | | | | . |
| 4595 | Lady Carmichael Medal Fund | | | 1,000 | . | . | .. | | ... | ... |
| 4598 | Jnanendra Nath Ghosh, Accountant . . . | . | . | | | 500 | | .. | .. | ... |
| 4599 | Bogra Municipal Sadar Dispensary .. | . | .. | 5,000 | . | | | ... | ... | . |
| | PABNA | | | | | | | | | |
| 4603 | Jagadis Chandra Lahiri, Treasurer .. | | . | 6,000 | | 4 000 | . | | ... | . |
| 4604 | Annada Prosad Moitra | . | | . | . | . | | | | |
| 4605 | Nripendra Nath Dutt, Kanungo, Mirkutia Khas Mahal | | | 1,500 | | . | | | | . |
| 4606 | G N Tagore, S N Tagore and A N Tagore, for protection of their estate from sale . | . | . | 5,000 | .. | .. | | . | . | .. |
| 4607 | Mahima Ranjan Maitra, for protection of estate from sale . | .. | | . | 500 | . | .. | | . | . |
| 4611 | Nalini Mohan Biswas, Nazir, Serajganj Munsifi .. | | | 1,000 | . | . | | .. | ... | ... |
| 4612 | Mahamad Khorsed Ali, Nazir, | ... | ... | 500 | . | . | | ... | ... | ... |
| 4613 | Abdur Rahim Khan Chaudhuri in Misc L A cases Nos 2, 3 and 4 of 1915 . ... | ... | .. | .. | .. | .. | ... | ... | ... | ... |
| 4614 | Jaynabunnissa Bibi in L A case No 3 of 1915 | | . | .. | . | .. | . | ... | .. | ... |
| 4615 | Kalipada Mitra, Kali Charan Mitra and Upendra Nath Bose, Trustees in L.A case No 3 of 1915 . .. . | | . | .. | ... | .. | ... | ... | ... | ... |
| 4616 | Purna Ch Pal, Naib Nazir, Pabna .. ... .. | . | .. | 500 | ... | . | . | ... | ... | ... |
| 4617 | Kalisundari *alias* Akshoybala Debya, in L A case No 4 of 1915 ... ... ... ... | ... | ... | . | .. | ... | ... | ... | ... | ... |
| 4618 | Sureswari Dasya, in L A case No 7 of 1916 ... ... ... | ... | ... | ... | ... | ... | ... | ... | ... | ... |
| | Carried over ... | 2,15,800 | 1,36,100 | 96,62,400 | 2,27,700 | 1,72,200 | 33,800 | 61,600 | 3,61,125 | 5,63,300 |

| 5½ PER CENT | | | | 6 PER CENT | | | | | Debentures and Railway shares | Total | Name of officer to whom interest is sent |
|---|---|---|---|---|---|---|---|---|---|---|---|
| 1922 | 1923 | 1925 | 1928 | 1926 | 1927 | 1930 | 1931 | 1932 | | | |
| Rs | Rs | Rs | Rs | Rs | Rs | Rs | Rs | Rs | Rs | Rs | |
| 100 | 1,100 | 5,000 | 9,17,150 | 4,94,200 | 52,100 | 21,58,500 | 9,09,300 | 3,85,000 | 2,66,800 | 1,65,74,075 | |
| | | | | | | | | | | 2,500 | District Judge |
| | | | | | ... | | | | | 500 | Ditto |
| | | | | | | | | | | 1,500 | Ditto |
| | | | | | | | | | | 300 | Magistrate |
| | | | | | | | | | | 1,000 | Ditto |
| .. | | | | | | | | | | 500 | Superintendent, Railway Police, Sadpur |
| | | | | | | | | | | 10,000 | Collector |
| | | | | | | | | | | 6,900 | Magistrate |
| | | | | | | .. | | | | 500 | Ditto |
| | | | | | | | | | | 1,000 | Ditto |
| | | .. | | | | ... | .. | | | 500 | Superintendent of Police |
| | | | | | | 200 | | | | 5,200 | Chairman of the Bogra Municipality |
| | | | | | | | | | | 10,000 | Collector |
| | | | | | 300 | | | | | 300 | Ditto |
| | | | | | | | | | | 1,500 | Ditto |
| | | | | | | | | | | 5,000 | Ditto |
| | | | | | .. | .. | .. | | | 500 | Ditto |
| | | | | | | | | | | 1,000 | District Judge |
| | | | | | | .. | | | | 500 | Ditto |
| 6,400 | .. | | | .. | .. | | .. | | | 6,400 | Ditto |
| 700 | | ... | | | .. | | | | | 700 | Ditto |
| | | | | .. | 300 | .. | .. | .. | ... | 300 | Ditto |
| ... | .. | .. | ... | .. | ... | ... | .. | .. | .. | 500 | Ditto |
| ... | .. | .. | .. | ... | 800 | .. | .. | ... | ... | 800 | Ditto |
| 200 | | ... | .. | | .. | ... | .. | ... | ... | 200 | Ditto |
| 7,400 | 1,100 | 5,000 | 9,17,150 | 4,94,200 | 53,500 | 21,58,700 | 9,09,300 | 3,85,000 | 2,66,800 | 1,66,32,175 | |

| Ledger Folio No | Name of Person or Fund on whose behalf held | 3½ PER CENT | | | | 3 per cent of 1896-97 | 4 PER CENT. | | 5 PER CENT | |
|---|---|---|---|---|---|---|---|---|---|---|
| | | 1842-43 | 1854-55 | 1865 | 1900-01 | | 1915-16 | 1916-17 | 1929-47 | 1915 55 |
| | | Rs | Rs | Rs | Rs | Rs | Rs | Rs | Rs | Rs |
| | Brought forward . . | 2,15,800 | 1,36,100 | 62,400 | 2,27,700 | 1,72,200 | 33,800 | 61,600 | 3,61,125 | 5,63,300 |
| | RAJSHAHI DIVISION – *contd* | | | | | | | | | |
| | PABNA –*concld* | | | | | | | | | |
| 4619 | Astasundari Dasya in L A case No 7 of 1916 | | . | .. | ... | | | | | . |
| 4620 | Nirodasundari Dasya in L A case No 7 of 1916 . .. | | . | | | | | | | |
| 4621 | Gopal Chandra Sen and others in L A cases Nos 4 and 9 of 1916 ... . | | .. | .. | . | | | | | .. |
| 4622 | Sarodasundari Dasya in L A case No 9 of 1916 .. | .. | | .. | | | | | | |
| 4623 | Durgamoyee Chaudhurani in L A case No 9 of 1916 . | | | | | | | | | |
| 4628 | Dwarka Nath Sarkar's Scholarship Fund .. ... | | | | | 1,200 | | | | |
| 4630 | Maintenance of Chak Shongpur Dispensary .. .. .. | . | 10,000 | 1,000 | | | . | | . | |
| 4631 | Provident Fund of District Board Employees . | . | .. | .. | .. | | | | | 10,000 |
| | JALPAIGURI | | | | | | | | | |
| 4633 | Dakhina Ranjan Mazumdar, Treasurer | .. | ... | 10,000 | | | | | | |
| 4634 | Sir Charles Elliot Medal | . | | 500 | | ... | | | | |
| 4635 | Panchanan Biswas, employee of the Western Duars Market Fund . . . | | | | | . | | | .. | . |
| 4636 | Jnanendra Nath Dutt, Nazir, Alipore-Duars subdivision | | . | 500 | | | | . | | |
| 4637 | Charu Chandra Mukherjee, Peshkar ... | | | 1,000 | | | | | | |
| 4638 | Jalpaiguri Dispensary . | | | .. | .. | | | . | 4,200 | . |
| 4639 | Braja Nath Rai, Naib Tahsildar, Bhalka . . | ... | ... | 800 | ... | | | . | | .. |
| 4640 | Jamini Kanta Banerji, Peshkar, Mainaguri . ... | ... | ... | 1,500 | ... | | . | . | ... | . |
| 4647 | Kulada Mohan Gupta, Peshkar, Alipore Tahsil ... .. | .. | . | ... | .. | . | | | . | ... |
| 4644 | Sasi Kanta Mozumdar, Nazir | .. | . | 3,000 | ... | | . | ... | | ... |
| 4646 | Hari Mohini Devi Memorial Prize Fund . ... | .. | . | 100 | .. | . | ... | . | | ... |
| 4648 | Upendra Chandra Chakravarti, Forester ... . ... | .. | .. | 500 | ... | . | ... | . | . | .. |
| 4649 | Ramlal Acharya, Ranger .. | ... | .. | 500 | ... | .. | .. | ... | ... | . |
| 4650 | Poresh Nath Mukherjee, Extra Assistant Conservator of Forests .. .. ... .. | .. | ... | 500 | .. | | . | ... | . | .. |
| 4651 | Priya Nath Sarkar, Extra Assistant Conservator of Forests ... ... ... ... | ... | ... | 500 | .. | ... | ... | ... | ... | ... |
| | Carried over ... | 2,15,800 | 1,46,100 | 96,82,800 | 2,27,700 | 1,73,4 0 | 33,800 | 61,600 | 3,65,325 | 5,73,300 |

| 5½ PER CENT. | | | | 6 PER CENT. | | | | | Debentures and Railway shares | Total | Name of officer to whom interest is sent |
|---|---|---|---|---|---|---|---|---|---|---|---|
| 1922 | 1922 | 1925 | 1928 | 1926 | 1927 | 1930 | 1931 | 1932 | | | |
| Rs | Rs | Rs | Rs | Rs | Rs | Rs | Rs | Rs | Rs | Rs | |
| 7,400 | 1,100 | 5,000 | 9,17,150 | 4,94,200 | 55,500 | 21,58,700 | 9,09,300 | 3,85,000 | 2,66,800 | 1,66,32,175 | |
| 100 | | | | | | | | | | 100 | District Judge |
| 300 | | | .. | | .. | .. | | | | 300 | Ditto |
| | .. | . | | .. | 1,000 | . | | .. | | 1,000 | Ditto |
| | | | | | 800 | | | | | 800 | Ditto |
| | | | | | 100 | | | | | 100 | Ditto |
| | | | | | | | . | | . | 1,200 | Magistrate |
| | | | | | | | | . | | 11,000 | Chairman, District Board |
| | . | | | | | | | | | 10,000 | Ditto |
| .. | | . | | | | | | .. | | 10,000 | Deputy Commissioner |
| | | | . | . | | | | | | 500 | Ditto |
| | .. | | | | | 100 | . | | | 100 | Ditto |
| .. | | | | | | | | | | 500 | Ditto |
| .. | | . | | | | | . | | | 1,000 | Ditto |
| . | | | | | | | | | | 4,200 | Ditto |
| . | | | | | | | | | | 800 | Ditto |
| | | | | | . | | | | | 1,500 | Ditto |
| | | | | | | | 1,000 | | | 1,000 | Ditto |
| | | .. | | .. | | | | | .. | 8,000 | District Judge, Dinajpur |
| . | .. | . | | .. | . | ... | | | | 100 | Inspector of Schools, Rajshahi Division |
| .. | | . | ... | | | | . | | | 500 | Forest Divisional Officer, Jalpaiguri |
| .. | . | . | | .. | | . | | | | 500 | Ditto |
| . | .. | | . | | | ... | . | | .. | 500 | Ditto |
| . | .. | .. | ... | . | ... | . | . | . | .. | 500 | Ditto |
| 7,800 | 1,100 | 5,000 | 9,17,150 | 4,94,200 | 55,400 | 21,58,800 | 9,10,300 | 3,85,000 | 2,66,800 | 1,66,81,375 | |

| Ledger Folio No | Name of Person or Fund on whose behalf held | 3½ per cent | | | | 3 per cent of 1896 97 | 4 per cent | | 5 per cent | |
|---|---|---|---|---|---|---|---|---|---|---|
| | | 1842-43 | 1854-55 | 1865 | 1900-01 | | 1915-16 | 1916-17 | 1929-47 | 1945-55 |
| | | Rs | Rs | Rs | Rs | Rs | Rs | Rs | Rs | Rs |
| | Brought forward | 2,15,800 | 1,46,100 | 96,82,800 | 2,27,700 | 1,78,400 | 33,800 | 61,600 | 3,65,325 | 5,73,300 |
| | RAJSHAHI DIVISION—*contd* | | | | | | | | | |
| | JALPAIGURI—*concld* | | | | | | | | | |
| 4660 | Jalpaiguri Cemetery Fund | | | 500 | | | | | . | |
| | MALDA | | | | | | | | | |
| 4662 | Lal Behari Gupta, Treasurer | | | | | | | | | |
| 4663 | Saraju Prasad Behance, surety of ditto .. . . | | . | | | . | . | | | |
| 4667 | Old Malda Charitable Dispensary . | | | 500 | . | | . | | | |
| | DARJEELING | | | | | | | | | |
| 4669 | Bejoy Chandra Chakravarty, Treasurer . | | | | | | | | | |
| 4669 | Chuni Lal Ganguli, Treasurer | | 4,500 | 500 | | | | . | | |
| 4672 | Basanta Kumar Mukherjee, Nazir . | | | 1,000 | | | . | | | |
| 4673 | Mr P N Bose, Lessee | | | 1,000 | . | | | . | | |
| 4678 | Victoria Memorial Hospital | | .. | 4,500 | | | | | . | |
| 4681 | Lowis Jubilee Free Accommodation Fund . | . | . | 54,500 | . | | | .. | . | |
| 4680 | Ditto Depreciation Fund | | | 61,000 | | | | | | |
| 4682 | Nolan Memorial Dispensary Fund of Lowis Jubilee Sanitarium . | . | | 2,000 | | | | | | |
| 4685 | Bholanath Bhattacharji, Forest Ranger .. | | | 1,000 | | . | | | . | |
| 4686 | Provas Chandra Roy Chowdhuri, Head Clerk | | | 500 | | | | | | |
| 4687 | Suresh Chandra Bose, Forest Ranger .. . . | . | . | 500 | ... | | | . | | .. |
| 4688 | Shib Chandra Chatterjee, Ranger . | | | 500 | . | . | . | | | . |
| 4689 | S K Mukerji, Ranger | . | | 1,000 | | . | | | | ... |
| 4690 | Narayan Chandra Banarji, Ranger . .. | | . | 1,000 | . | .. | . | | | . |
| 4692 | Mahammad Ishaq Khan, Clerk | | | 500 | | | | | . | |
| 4694 | Kurtiman Prodhan, Head Clerk, Victoria School, Kurseong . | | | 600 | .. | | . | | . | . |
| 4695 | Jaynarayan Prodhan, Head Clerk, Dow Hill School, Kurseong . .. . | | .. | 600 | ... | | | | .. | ... |
| 4698 | Darjeeling Cemetery Fund . | | | 1,000 | | | | .. | | . |
| 4699 | Kurseong Cemetery Fund | ... | .. | 1,500 | .. | . | ... | | .. | .. |
| 4701 | Salig Ram, Cashier . .. | ... | .. | 1,000 | . | | | ... | ... | ... |
| | Carried over .. | 2,15,800 | 1,50,600 | 96,18,800 | 2,27,700 | 1,78,400 | 33,800 | 61,600 | 3,65,325 | 5,73,300 |

| 5½ PER CENT | | | | 6 PER CENT | | | | | Debentures and Railway shares | Total | Name of officer to whom interest is sent |
|---|---|---|---|---|---|---|---|---|---|---|---|
| 1922 | 1923 | 1925 | 1928 | 1926 | 1927 | 1930 | 1931 | 1932 | | | |
| Rs | Rs | Rs | Rs | Rs | Rs | Rs | Rs | Rs | Rs | Rs | |
| 7,800 | 1,100 | 5,000 | 9,17,150 | 4,94,200 | 55,400 | 21,58,800 | 9,10,300 | 3,85,000 | 2,66,800 | 1,66,81,775 | |
| | | | | | | | | | | 500 | Executive Engineer of the Jalpaiguri Division |
| | | | | | | 1,000 | | | | 1,000 | Collector |
| | | | | | | 9,000 | | | | 9,000 | Ditto |
| | | | | | | | | | | 500 | Secretary to the Managing Committee, Old Malda Charitable Dispensary |
| | | | | 15,000 | | | | | | 15,000 | Deputy Commissioner |
| | | | | | | | | | | 5,000 | Ditto |
| | | | | | | | | | | 1,000 | Ditto |
| | | | | | | | | | | 1,000 | Ditto |
| | | | | | | | | | | 1,500 | Chairman, Municipality |
| | | | | | | | | | | 54,500 | President of the Lowis Jubilee Sanitarium Committee |
| | | | | | | | | | | 61,000 | Ditto |
| | | | | | | | | | | 2,000 | Ditto |
| | | | | | | | | | | 1,000 | Forest Divisional Officer, Darjeeling |
| | | | | | | | | | | 500 | Ditto |
| | | | | | | | | | | 500 | Forest Divisional Officer, Kalimpong |
| | | | | | | | | | | 500 | Forest Divisional Officer, Kurseong |
| | | | | | | | | | | 1,000 | Ditto |
| | | | | | | | | | | 1,000 | Forest Divisional Officer, Kalimpong |
| | | | | | | | | | | 500 | Forest Divisional Officer, Direction Division |
| | | | | | | | | | | 600 | Director of Public Instruction, Bengal |
| | | | | | | | | | | 600 | Ditto |
| | | | | | | | | | | 1,900 | Executive Engineer, Darjeeling Division |
| | | | | | | | | | | 1,500 | Ditto |
| | | | | | | | | | | 1,000 | Political Officer, Sikkim. |
| 7,800 | 1,100 | 5,000 | 9,17,150 | 5,09,200 | 55,400 | 21,68,800 | 9,10,300 | 3,85,000 | 2,66,800 | 1,68[illegible],975 | |

| Ledger Folio No. | Name of Person or Fund on whose behalf held | 3½ per cent | | | | 3 per cent of 1896-97 | 4 per cent | | 5 per cent | |
|---|---|---|---|---|---|---|---|---|---|---|
| | | 1842-48 | 1854-55 | 1865 | 1900-01 | | 1915-16 | 1916-17 | 1929-47 | 1945-55 |
| | | Rs | Rs | Rs | Rs | Rs | Rs | Rs | Rs | Rs |
| | Brought forward | 2,15,800 | 1,50,600 | 98,18,900 | 2,27,700 | 1,78,400 | 33,800 | 61,600 | 3,65,325 | 5,73,800 |
| | DACCA DIVISION | | | | | | | | | |
| | DACCA | | | | | | | | | |
| 4703 | Monmohan Datta, Assistant Manager, Nawab Estate | | | 2,000 | | . | | . | . | .. |
| 4704 | Chandra Mohan Basak Scholarship .. | | | 4,100 | | | | | | |
| 4705 | Brindaban Chandra Basak, Stamp Clerk . | | | | | 100 | | | | |
| 4706 | Isan Chandra Roy's Maluchi Dispensary Fund | | | 11,000 | | | | | . | |
| 4707 | Giridhari Lal Roy Widow Maintenance Fund ... | . | | 31,000 | | | | | . | |
| 4708 | Dwarka Nath Pal, for payment of revenue | | | . | | 100 | .. | | | |
| 4715 | Vyse Orphange | | | 10,000 | | | | | | |
| 4531 | Kazi Ali Ahmed, Factory Overseer | | | 300 | | | | . | | . |
| 4719 | Fanibhushan Roy, Nazir | | | | | 5,000 | | | | |
| 4720 | Estate of late Mrs D J Catchick | | | 15,000 | | | | | | |
| 4722 | Brennand Prize Fund | | . | 1,000 | | | | | | |
| 4723 | Ram Lochan Ghose Prize | .. | | 1,000 | | | | . | | |
| 4724 | Pope Memorial Fund No I | | | 1,200 | | | | | | |
| 4724 | Ditto „ II | . | | 600 | | | | | | |
| 4725 | Lewis Medal | | | 500 | | | | | . | |
| 4726 | Donnally Prize | | | 100 | | | | | . | |
| 4727 | Raja Kali Narain Scholarship | | | 6,000 | | | | | | |
| 4728 | Srinath Memorial Fund | | | 200 | | | | | | |
| 4731 | Abaidulla Memorial Fund | | | 500 | | | | | | .. |
| 4733 | Dufferin Hospital Maintenance Fund .. | | | 51,600 | | | | | . | |
| 4734 | Raja Srinath Roy's Eye Infirmary | | | 20,000 | | . | | | | |
| 4735 | Rup Roghu Endowment for Dufferin Fund | | | 11,000 | . | | | | | |
| 4736 | Rup Roghu Female Medical Scholarship Fund | | | 8,500 | | | .. | .. | . | . |
| 4737 | Joy Chandra Nityakali Memorial Fund . | | | 1,000 | . | | | | . | . |
| 4740 | Satish Chandra Chatterjee, Accountant . | | | | | | | | .. | |
| 4742 | Famine Relief . . | | | 1,300 | | | | | .. | . |
| 4743 | Mohesh Chandra Charitable Dispensary Fund, Sabhar | | . | 10,700 | | | | ... | .. | ... |
| 4744 | Shekharnagar Charitable Dispensary Fund ... . | .. | . | 2,400 | . | | | .. | ... | ... |
| 4746 | Sub-Assistant Surgeon Guru Nath Sen Medal Fund ... | .. | . | 400 | ... | .. | ... | ... | ... | ... |
| 4747 | Ronaldshay Gold Medal Fund | .. | .. | . | 1,000 | ... | .. | ... | .. | ... |
| | Carried over ... | 2,15,800 | 1,50,600 | 1,00,07,700 | 2,78,800 | 1,78,600 | 33,800 | 61,600 | 3,65,325 | 5,73,800 |

| 5½ PER CENT | | | | 6 PER CENT | | | | | Debentures and Railway shares | Total | Name of officer to whom interest is sent |
|---|---|---|---|---|---|---|---|---|---|---|---|
| 1922 | 1923 | 1925. | 1928 | 1926 | 1927 | 1930 | 1931 | 1932. | | | |
| Rs | Rs | Rs | Rs | Rs | Rs | Rs | Rs | Rs | Rs | Rs. | |
| 7,800 | 1,100 | 5,000 | 9,17,150 | 5,09,200 | 55,400 | 21,68,800 | 9,10,800 | 3,85,000 | 2,66,800 | 1,68,46,975 | |
| | | | | | | | | | | 2,000 | Collector |
| | | | | | | .. | | | | 4,100 | Ditto |
| . | | | | | | . | | . | . | 100 | Ditto |
| . | . | | . | | | | | | | 11,000 | Ditto |
| . | | . | | | . | . | | | | 81,000 | Ditto |
| | | | | | | | | | | 100 | Ditto |
| | .. | . | | | | . | | | | 10,000 | Commissioner, Collector and Principal, Dacca College |
| | | | .. | | | . | | | | 800 | Inspector-General of Prisons, Bengal |
| | | | | | | | .. | | | 5,000 | District Judge |
| | | | | | . | | | | | 15,000 | Sub-Judge, 1st Court |
| | | | | .. | | | | | | 1,000 | Vice Chancellor, Dacca University |
| | | | | . | | | | | | 1,000 | Headmaster, Dacca Collegiate School |
| | | | . | | | | | | | 1,200 | Registrar, Dacca University |
| | | | | | | | | | | 600 | Headmaster, Dacca Collegiate School |
| ... | | | | | | | | | | 500 | Vice Chancellor, Dacca University |
| | | | | | | | | | | 500 | Principal, Dacca Intermediate College |
| | | | | | | | | . | | 6,000 | Vice Chancellor, Dacca University |
| | | | | | | | . | | | 200 | Headmaster, Dacca Collegiate School |
| | | | | | | | | | | 500 | Secretary, Dacca Madrasah Committee |
| .. | | | | | | | | | | 53,600 | Magistrate |
| | | | | | | | | | | 20,000 | Ditto |
| | | | . | . | | .. | | | .. | 11,000 | Ditto |
| | .. | | | | | | | | | 3,500 | Ditto |
| | | ... | . | . | . | | .. | | | 1,000 | Ditto |
| . | | | | 500 | | . | . | . | ... | 500 | Superintendent, River Police, Bengal, Narayanganj |
| .. | .. | . | ... | .. | | .. | . | | | 1,300 | Chairman, District Board |
| ... | . | .. | | . | .. | | .. | .. | | 10,700 | Ditto |
| .. | ... | . | . | . | . | ... | ... | . | . | 2,400 | Ditto |
| | ... | .. | | ... | . | ... | ... | | . | 400 | Superintendent, Medical School, Dacca |
| ... | ... | ... | ... | . | . | | .. | | ... | 1,000 | Ditto |
| 7,800 | 1,100 | 5,000 | 9,17,150 | 5,09,700 | 55,400 | 21,68,800 | 9,10,800 | 3,85,000 | 2,66,800 | 1,70,42,475 | |

| Ledger Folio No | Name of Person or Fund on whose behalf held | 3½ PER CENT | | | | 3 per cent of 1896-97. | 4 PER CENT | | 5 PER CENT | |
|---|---|---|---|---|---|---|---|---|---|---|
| | | 1842-43 | 1854-55 | 1865. | 1900-01 | | 1915-16 | 1916-17 | 1929-47 | 1945-55 |
| | | Rs | Rs | Rs | Rs | Rs | Rs | Rs | Rs | Rs |
| | Brought forward | 2,15,800 | 1,50,600 | 10,007,700 | 2,28,700 | 1,78,600 | 33,800 | 61,600 | 3,65,325 | 5,73,300 |
| | DACCA DIVISION—*contd* | | | | | | | | | |
| | FARIDPUR | | | | | | | | | |
| 4750 | Indu Bhusan Sarcar, surety of Prasanna Kumar Sarcar, Treasurer | . | | | | | . | | | .. |
| 4752 | Nibaran Chandra Dutt, Khas Mahal Tahsildar | .. | | 500 | | . | . | ... | | ... |
| 4753 | Ram Lal Samajdar, Sub-Treasurer, Madaripur | . | . | 500 | .. | .. | . | . | . | ... |
| 4754 | Hara Charan Pal, Khas Mahal Tahsildar | | | 400 | | | | | | .. |
| 4758 | Bijoy Chandra Sen, Naib Nazir | | | 500 | .. | . | | | .. | |
| 4759 | Hara Kumar Banerji, Nazir | | 1,100 | | | . | | | . | |
| 4760 | Kali Narain Sen, Nazir, Goalundo | | | 500 | | | | | | . |
| 4761 | Tarini Charan Sen, Nazir, Madaripur Munsiff | | | 500 | . | . | | | | |
| 4762 | Kusal Chandra Dey, Naib Nazir, Bhanga | | | | | | | | | . |
| 4765 | Maintenance of Ratna Moni Victoria Pathsala at Kuarpur | | | | . | 1,000 | | | . | .. |
| 4766 | Tripura Sundari Charitable Dispensary Fund | | | 32,000 | | | | | | . |
| 4769 | Gangadhar Nag-Sasimukhi Ghose Endowment | | | . | | | . | ... | . | |
| 4771 | Ahamed Azzaman, Court Inspector | | | | | | | | | .. |
| | BAKARGANJ | | | | | | | | | |
| 4774 | Raj Chandra and Golakmoni Scholarship Fund | . | | 5,500 | . | | | | | . |
| 4775 | E P Casperszz, for payment of revenue | | | 1,000 | | | | | | .. |
| 4776 | Upendra Chandra Choudhury, Treasurer | | | 20,000 | . | | | | | .. |
| 4777 | Kumar Satyapriya Ghosal, minor, Bhakailash Estate | | | 100 | | | | | | |
| 4778 | Satyanidhi Ghosal and others for protection of their estate from sale | | | 7,000 | | | | | | |
| 4780 | Akshoy Kumar Banerji, Circle Officer, Court of Wards | .. | . | | | 500 | | | | .. |
| 4781 | Munshi Sadat Ali, Circle Officer, Court of Wards | | . | 1,600 | | | | | | ... |
| 4782 | Debendra Kumar Choudhuri, Circle Officer, Court of Wards | .. | | | 1,000 | | | | | |
| 4786 | Abinash Chandra Sen, Nazir, Patuakhali | | .. | 1,000 | | | . | . | . | |
| 4787 | Nishikanta Choudhury, Nazir | .. | .. | 1,000 | | | | | . | ... |
| 4788 | Hira Lal Bose, Nazir, Judge's Court | ... | . | .. | | 1,000 | | | . | . |
| 4791 | Bhairab Chandra Banik's Family Prize, Kashipur | ... | .. | 100 | | | | . | | .. |
| 4792 | Dowlat Khan Coronation Trust Fund | . | ... | 300 | | | | | .. | .. |
| 4793 | Barisal Zilla School Endowment Fund | ... | ... | 16,800 | .. | | . | ... | ... | ... |
| 4796 | Barisal Dispensary | ... | ... | 1,000 | .. | | .. | ... | .. | .. |
| | Carried over | 2,15,800 | 1,51,700 | 1,00,98,000 | 2,29,700 | 1,81,100 | 33,800 | 61,600 | 3,65,325 | 5,73,300 |

| 5½ per cent | | | | 6 per cent | | | | | Debentures and Railway shares | Total | Name of officer to whom interest is sent |
|---|---|---|---|---|---|---|---|---|---|---|---|
| 1922. | 1923 | 1925. | 1928 | 1926 | 1927 | 1930 | 1931 | 1932 | | | |
| Rs | Rs. | Rs | Rs. | Rs | Rs. | Rs | Rs | Rs | Rs | Rs | |
| 7,800 | 1,100 | 5,000 | 9,17,150 | 5,09,700 | 55,400 | 21,68,800 | 9,10,300 | 3,85,000 | 2,66,800 | 1,70,12,475 | |
| | 15,000 | | | | | | | | | 15,000 | Collector |
| | | | | | | | | | | 500 | Ditto |
| . | . | . | | | | | | | | 500 | Ditto |
| ... | | | . | | . | | | | | 400 | Ditto |
| | | . | | | | | | | | 500 | District Judge |
| .. | | . | | | | | . | | | 1,100 | Ditto |
| . | . | | | | | | | | | 500 | Ditto |
| | | | | . | | | | | | 500 | Ditto |
| | | | 300 | | | | | . | | 300 | Ditto |
| | . | | | | | | | | | 1,000 | Chairman, District Board |
| | | | | | . | | | | | 32,000 | Ditto |
| . | | ... | | | | | | | 1,000 | 1,000 | Magistrate |
| | | | | | | 300 | | | | 300 | Superintendent of Police |
| | | | | | | | | | | 5,500 | Collector |
| . | | | | | | | | | | 1,000 | Ditto |
| | . | | | | | | | | | 20,000 | Ditto |
| .. | | | | . | | | . | | | 100 | Ditto |
| . | . | | | | | ... | . | | | 7,000 | Ditto |
| . | | . | | ... | | | | | | 500 | Ditto |
| . | | | | | | . | . | | | 1,600 | Ditto |
| | . | | ... | | | .. | | | . | 1,000 | Ditto |
| ... | | | . | . | | | .. | | | 1,000 | District Judge |
| ... | .. | . | . | . | | . | . | | | 1,000 | Ditto |
| ... | . | | | .. | .. | | .. | .. | . | 1,000 | Ditto |
| ... | ... | | | | .. | | ... | .. | | 100 | Magistrate |
| ... | ... | .. | .. | .. | ... | . | . | | . | 300 | Ditto |
| ... | ... | ... | ... | .. | . | ... | | . | ... | 16,800 | Ditto |
| ... | ... | ... | ... | | ... | ... | ... | . | ... | 1,000 | Magistrate and President, Dispensary Committee. |
| 7,800 | 16,100 | 5,000 | 9,17,450 | 5,09,700 | 55,400 | 21,69,100 | 9,10,300 | 3,85,000 | 2,67,800 | 1,71,58,975 | |

| Ledger Folio No | Name of Person or Fund on whose behalf held | 3½ PER CENT | | | | 3 per cent of 1896-97 | 4 PER CENT | | 5 PER CENT | |
|---|---|---|---|---|---|---|---|---|---|---|
| | | 1812-43 | 1854-55 | 1865 | 1900-01 | | 1915-16 | 1916-17 | 1929-47 | 1945-55 |
| | | Rs. | Rs | Rs | Rs | Rs. | Rs. | Rs | Rs | Rs |
| | Brought forward | 2,15,800 | 1,51,700 | 1,00,98,000 | 2,29,700 | 1,81,100 | 33,800 | 61,600 | 3,65,325 | 5,73,300 |
| | DACCA DIVISION—*contd* | | | | | | | | | |
| | BAKARGANJ—*concld* | | | | | | | | | |
| 4798 | Nawab Ashanulla's Trust | . | | 3,300 | | | | | . | .. |
| 4800 | Pirojpur High English School | | | 19,000 | . | | | . | | . |
| 4802 | Rajani Kanta Gupta, Head Clerk . | | .. | . | | . | | ... | .. | .. |
| | MYMENSINGH | | | | | | | | | |
| 4805 | Profits of taluk Jowarburmi | . | . | 1,300 | | . | | | .. | .. |
| 4806 | Profits of taluk Newjali | | . | 700 | | 1,500 | | | ... | |
| 4807 | Hriday Nath Chowdhury, Nazir and Sub-Treasurer, Tangail | | . | 500 | | . | | | . | ... |
| 4808 | Ishan Chandra Sil, Sub-Treasurer, Tangail . | | . | . | | 500 | | | . | |
| 4809 | Sona Ulla Mean, Khas Tahsildar . | | . | 500 | .. | | . | | | |
| 4810 | Kashi Chandra Datta, Stamp vendor . | | | 1,000 | | | | | .. | |
| 4811 | Satya Kumar Ghose, Khas Tahsildar, Kishorganj | | | | | 500 | | | | |
| 4812 | Santosh six-annas Ward's Estate .. . | .. | | | . | | | ... | | 1,03,100 |
| 4812 | Hemendra Nath Roy Chowdhuri, minor .. . | | | . | | | . | .. | . | |
| 4813 | Revati Kanta Roy, Accountant, Kishorganj subdivision | | | | | | | | . | |
| 4813 | Revati Kanta Roy, Head Clerk | | | | | | | | | |
| 4814 | Pabitra Charan Guha, Treasurer | . | . | . | . | 20,000 | | | | |
| 4815 | Pundarikakhya Hospital | | . | 1,25,000 | | | | | | |
| 4816 | Mahamed Samash Uddin, Khas Tahsildar, Tangail subdivision | | | 500 | | | | | | |
| 4821 | Tara Nath Dutt, Nazir, Bajitpur Munsiff . | | | 500 | | | | . | . | |
| 4822 | Narendra Kumar Ukil, Naib Nazir, Kishorganj Munsiff | .. | | | | | . | | | |
| 4823 | Sarat Chandra Banerjee, Nazir, Pingna | .. | | | | . | | | | |
| 4825 | Satya Ranjan De, Nazir | .. | | | | 2,500 | | . | . | . |
| 4829 | Scholarship (Prize) Trust Fund | | | 500 | | | | . | .. | . |
| 4830 | Chandra Prabha Prize Fund | . | . | 100 | . | . | .. | | .. | . |
| 4831 | Muktagacha Dispensary | . | . | 14,200 | | | | | .. | .. |
| 4832 | O'Kinealy Prize Fund | | .. | 2,000 | . | | | | | . |
| 4833 | Raja Harish Chandra Scholarship in Mymensingh Zilla School .. ... . . | . | | 1,500 | | | | . | | ... |
| 4834 | Raja Harish Chandra Scholarship in Mymensingh Girls' School .. .. ... ... | | . | 2,500 | . | | ... | | .. | ... |
| 4835 | Alexandra Girls' School Building ... ... ... .. | .. | | 500 | . | ... | . | ... | .. | .. |
| 4836 | Alexander Scholarship Fund . | . | ... | 800 | ... | .. | | . | .. | .. |
| 4841 | Nasirabad Dispensary ... ... | ... | ... | 15,000 | ... | ... | ... | ... | ... | ... |
| 4843 | Famine Relief ... ... ... | ... | .. | 3,000 | | .. | ... | ... | ... | ... |
| | Carried over .. | 2,15,800 | 1,51,700 | 1,02,90,400 | 2,29,700 | 2,06,100 | 33,800 | 61,600 | 3,65,325 | 6,76,400 |

| 5½ per cent | | | | 6 per cent | | | | | Debentures and Railway shares | Total | Name of officer to whom interest is sent |
|---|---|---|---|---|---|---|---|---|---|---|---|
| 1922. | 1923 | 1925 | 1928 | 1926 | 1927 | 1930 | 1931 | 1932 | | | |
| Rs | Rs | Rs | Rs | Rs | Rs | Rs | Rs | Rs | Rs | Rs | |
| 7,800 | 16,100 | 5,000 | 9,17,450 | 5,09,700 | 55,400 | 21,69,100 | 9,10,300 | 3,85,000 | 2,67,800 | 1,71,53,975 | |
| | | | | | | | | | | 3,300 | Chairman, Barisal Dispensary Committee |
| | | | | | | | | | | 19,000 | Subdivisional Officer and President, Pirojpur Government School |
| | | | | | 500 | | | | | 500 | Superintendent of Police |
| | | | | | | | | | | 1,500 | Collector |
| | | | | | | | | | | 2,200 | Ditto |
| | | | | | | | | | | 500 | Ditto |
| | | | | | | | | | | 500 | Ditto |
| | | | | | | | | | | 500 | Ditto |
| | | | | | | | | | | 1,000 | Ditto |
| | | | | | | | | | | 500 | Ditto |
| | | | | | | | | | | 1,03,100 | Ditto |
| | | | | | | | 1,00,000 | | | 1,00,000 | Ditto |
| | | | 100 | | | | | | | 100 | Ditto |
| | | | | | | 100 | 100 | | | 200 | Ditto |
| | | | | | | | | | | 20,000 | Ditto |
| | | | | | | | | | | 1,25,000 | Ditto |
| | | | | | | | | | | 500 | Ditto |
| | | | | | | | | | | 500 | District Judge |
| | | | 800 | | | | | | | 800 | Ditto |
| | | | | | | 500 | | | | 500 | Ditto |
| | | | 500 | | | | | | | 3,000 | Ditto |
| | | | | | | | | | | 500 | Magistrate |
| | | | | | | | | | | 100 | Ditto |
| | | | | | | | | | | 14,200 | Ditto |
| | | | | | | | | | | 2,000 | Ditto |
| | | | | | | | | | | 1,500 | Ditto |
| | | | | | | | | | | 2,500 | Ditto |
| | | | | | | | | | | 500 | Ditto |
| | | | | | | | | | | 800 | Ditto |
| | | | | | | | | | | 15,000 | Chairman, Nasirabad Municipality |
| | | | | | | | | | | 3,000 | Chairman, District Board |
| 7,800 | 16,100 | 5,000 | 9,18,850 | 5,09,700 | 55,900 | 21,69,700 | 10,10,400 | 3,85,000 | 2,67,800 | 1,75,76,575 | |

| Ledger Folio No. | Name of Person or Fund on whose behalf held | 3½ PER CENT | | | | 3 per cent of 1896-97 | 4 PER CENT | | 5 PER CENT | |
|---|---|---|---|---|---|---|---|---|---|---|
| | | 1842-13 | 1854 55 | 1865 | 1900-01 | | 1915-16 | 1916-17 | 1929-47 | 1945-55 |
| | | Rs | Rs | Rs | Rs | Rs | Rs | Rs | Rs | Rs |
| | Brought forward | 2,15,800 | 1,51,700 | 1,02,90,400 | 2,29,700 | 2,06,100 | 83,800 | 61,600 | 3,65,325 | 6,76,400 |
| | DACCA DIVISION—*concld* | | | | | | | | | |
| | MYMENSINGH—*concld* | | | | | | | | | |
| 4845 | Chandra Kumar Dutt, Inspector | . | | 500 | | | | | | . |
| 4846 | Brojendra Nath Mukherji, Head Clerk | | | 500 | | | | | . | |
| 4847 | Nirmalendu Gupta, Assistant Accountant ... | | | 500 | | .. | | | | |
| | CHITTAGONG DIVISION | | | | | | | | | |
| | CHITTAGONG | | | | | | | | | |
| 4852 | Hadayat Ali Choudhury, minor | | | 4,800 | | | | | | |
| 4853 | Estate of Ram Ratan Tewari | | | 40,000 | | | | | | |
| 4855 | Estate of Rajkissen Banerjee | | | 16,000 | | | | | | |
| 4856 | Raj Chandra Datta, Nazir | | | 1,500 | | | | | | |
| 4857 | Debendra Kumar Dutt, Excise and Salt, Head Clerk | | | 300 | | | | | | |
| 4858 | Rajendra Chandra Nag, General Manager, Court of Wards | | | 800 | | | | | | 400 |
| 4859 | Mahendra Lal Sarkar, Stamp Clerk | | | | | | | | | |
| 4863 | Jamini Ranjan Choudhury, Cashier . | . | | 2,000 | | | | | | |
| 4865 | Ahmedar Rahman, Nazir, Patya Munsifi ... . | | | 1,500 | | | | | | |
| 4866 | Charu Chandra Guha, Nazir | | | 4,200 | | 500 | | | | |
| 4867 | Jatra Mohan Bal, Nazir, Fatikcheri Munsifi . . | | 1,000 | | | . | | | | |
| 4869 | Baradaranjan Roy, Nazir's clerk, Patya Munsifi | | | 500 | | | | | | |
| 4871 | Nazir Ahmed, Nazir, Hathazari Munsifi . | | . | 1,000 | | | | | | |
| 4872 | Sarada Charan Sen, Nazir, Satkania . | | | 500 | | 1,000 | | | | |
| 4873 | Jogendu Bikas Roy, Naib Nazir ... | | .. | | | 1,000 | | | . | |
| 4877 | Chittagong Port Fund | | | 1,18,300 | | | | | | |
| 4878 | Chittagong Port Commissioners' Depreciation Fund | | . | 25,700 | | | . | | | |
| 4879 | Revetment Account | | | 25,700 | | | . | | . | |
| 4880 | Dredger Account . | .. | | 25,700 | | | | | | . |
| 4881 | Pilotage Fund ... .. | | | 10,200 | | | .. | . | | |
| 4882 | Nabin Chandra Chakrabarty, Cashier .. . .. | . | | | | 1,000 | | | . | |
| 4883 | Messrs Raili Brothers | | 1,000 | | 1,000 | | | .. | | |
| 4884 | Bijoy Krishna Dastidar | . | . | 500 | | | | . | | . |
| 4885 | Fanindra Nath Mitter, Storekeeper . . | . | .. | | | 2,000 | . | . | ... | . |
| 4890 | Rai Golak Chandra Scholarship | | .. | 4,800 | ... | ... | . | . | . | |
| 4891 | Kishori Mohini Roy Scholarship | . | .. | 2,000 | .. | | | . | .. | ... |
| | Carried over ... | 2,15,800 | 1,53,700 | 1,05,77,400 | 2,80,700 | 2,11,600 | 83,800 | 61,600 | 3,65,325 | 6,76,800 |

| 5½ per cent | | | | 6 per cent | | | | | Debentures and Railway shares | Total | Name of officer to whom interest is sent |
|---|---|---|---|---|---|---|---|---|---|---|---|
| 1922 | 1923 | 1925 | 1928 | 1926 | 1927 | 1930 | 1931 | 1932 | | | |
| Rs | Rs | Rs | Rs | Rs | Rs | Rs | Rs | Rs | Rs | Rs | |
| 7,800 | 16,100 | 5,000 | 9,18,350 | 5,09,700 | 55,900 | 21,69,700 | 10,10,400 | 3,85,000 | 2,67,800 | 1,75,76,575 | |
| | | | | | | | | | | 500 | Superintendent of Police |
| | | | | | | | | | | 500 | Ditto |
| | | | | | | | | | | 500 | Ditto |
| | | | | | | | | | | 4,800 | Collector |
| | | | | | | | | | | 10,000 | Ditto |
| | | | | | | | | | | 16,000 | Ditto |
| | | | | | | | | | | 1,500 | Ditto |
| | | | | | | | | | | 500 | Ditto |
| | | 600 | 1,200 | | | | | | | 8,000 | Ditto |
| | | | | | | | 6,000 | | | 5,000 | Ditto |
| | | | | | | | | | | 2,000 | Collector of Customs |
| | | | | | | | | | | 1,500 | District Judge |
| | | | | | | | | | | 1,700 | Ditto |
| | | | | | | | | | | 1,000 | Ditto |
| | | | | | | | | | | 500 | Ditto |
| | | | | | | | | | | 1,000 | Ditto |
| | | | | | | | | | | 1,500 | Ditto |
| | | | | | | | | | | 1,000 | Ditto |
| | | | | | | | | | | 1,18,700 | Chairman, Port Commissioners |
| | | | | | | | | | | 25,700 | Ditto |
| | | | | | | | | | | 25,700 | Ditto |
| | | | | | | | | | | 25,700 | Ditto |
| | | | | | | | | | | 10,900 | Ditto |
| | | | | | | | | | | 1,000 | Ditto |
| | | | | | | | | | | 2,000 | Ditto |
| | | | | | | | | | | 500 | Ditto |
| | | | | | | | | | | 2,000 | Ditto |
| | | | | | | | | | | 4,900 | Principal, Chittagong College |
| | | | | | | | | | | 2,000 | Ditto |
| 7,800 | 16,100 | 5,600 | 9,19,550 | 5,09,700 | 55,900 | 21,69,700 | 10,15,400 | 3,85,000 | 2,67,800 | 1,78,79,275 | |

| Ledger Folio No | Name of Person or Fund on whose behalf held | 3½ PER CENT | | | | 3 per cent of 1896-97 | 4 PER CENT | | 5 PER CENT | |
|---|---|---|---|---|---|---|---|---|---|---|
| | | 1842-43 | 1854 55 | 1865 | 1900 01 | | 1915-16 | 1916-17 | 1929-47 | 1945-55 |
| | | Rs | Rs | Rs | Rs | Rs | Rs | Rs | Rs | Rs |
| | Brought forward | 2,15,800 | 1,53,700 | 1,05,77,400 | 2,30,700 | 2,11,600 | 33,800 | 61,600 | 3,65,325 | 6,76,800 |
| | CHITTAGONG DIVISION—*contd* | | | | | | | | | |
| | CHITTAGONG—*concld* | | | | | | | | | |
| 4892 | Nityananda Medal Fund | | | 400 | | | | | | |
| 4893 | Chittagong College | | | 2,000 | | | | | | |
| 4896 | Chittagong Bayley Medal | | | 760 | | | | | | |
| 4898 | Maintenance of Ahmuddia Junior Madrassa at Rupkania | | | 11,000 | | | | | | |
| 4900 | Hemendra Kumar Chatterjee, Store keeper | | | | | | | | 200 | |
| 4902 | Chittagong Hill Tracts Bazar Fund | | | 5,000 | | | | | | |
| 4904 | Sitakundu Vernacular School | | | 1,000 | | | | | | |
| 4906 | Satishchandra Guha, Deputy Ranger | | | 500 | | | | | | |
| 4919 | Munshi Mahammad Yacob, Deputy Ranger | | | 1,000 | | | | | | |
| 4907 | Jahar Lal Sanyal, Deputy Ranger | | | 500 | | | | | | |
| 4910 | Durga Charan Sinha, Ranger | | | 1,000 | | | | | | |
| 4918 | Sarat Chandra Ghosh, Ranger | | | 500 | | | | | | |
| 4915 | Raimohan Chakraburty, Ranger | | | 1,000 | | | | | | |
| 4916 | Lalit Kumar Ghose, Deputy Ranger | | | 1,000 | | | | | | |
| 4917 | Aghore Chandra Nath, Head-clerk | | | 500 | | | | | | |
| | TIPPERA | | | | | | | | | |
| 4921 | Nabin Chandra Guha and Harendra Chandra Guha, sureties of Kiran Chandra Guha, Treasurer | | | | | 15,000 | | | | |
| 4922 | Anukul Chandra Roy, Manager, Bhukailas Ward's Estate | | | 2,000 | | | | | | |
| 4924 | Nibaran Chandra Mukerjee, Naib, Bhukailas Ward's Estate | | | | 800 | | | | | |
| 4925 | Durga Prasanna Bose, Naib, Bhukailas Ward's Estate | | | 1,200 | | | | | | |
| 4928 | Indra Kumar Sen, Head Clerk, Bhukailas Raj Ward's Estate | | | 500 | | | | | | |
| 4929 | Chandra Shekhar Burdhan, Muktear, Sarail Ward's Estate | | | 1,000 | | | | | | |
| 4930 | Gokul Charan Chakravarty, Tahsildar, Sarail Ward's Estate | | | 500 | | | | | | |
| | Carried over | 2,15,800 | 1,53,700 | 1,06,08,700 | 2,31,500 | 2,26,600 | 33,800 | 61,600 | 3,65,525 | 6,76,800 |

| 5½ PER CENT | | | | 6 PER CENT | | | | | Debentures and Railway shares | Total | Name of officer to whom interest is sent |
|---|---|---|---|---|---|---|---|---|---|---|---|
| 1922 | 1923 | 1925 | 1928 | 1926 | 1927 | 1930 | 1931 | 1932 | | | |
| Rs | Rs. | Rs | Rs | Rs | Rs | Rs | Rs | Rs | Rs | Rs | |
| 7,800 | 16,100 | 5,600 | 9,19,550 | 5,09,700 | 55,900 | 21,69,700 | 10,15,400 | 3,85,000 | 2,67,800 | 178,79,275 | |
| | | | | | | | | | | 400 | Principal, Chittagong College |
| | | | | | ... | . | . | | | 2,000 | Ditto |
| . | | | | | | . | | | | 700 | Magistrate |
| | | | | | | | | | | 11,000 | Magistrate and Inspector of Schools, Chittagong Division |
| | | . | | | | | | | | 200 | Executive Engineer, Chittagong Division |
| | | . | | | | | | | | 5,000 | Superintendent, Chittagong Hill Tracts |
| | | | | | | | | . | | 1,000 | Chairman, District Board |
| .. | | | | | . | | | | | 500 | Forest Divisional Officer, Cox's Bazar Division |
| | | | . | . | | | . | | | 1,000 | Ditto |
| | | . | | | . | | | . | | 500 | Forest Divisional Officer, Chittagong Division |
| . | | | | . | | | | | . | 1,000 | Ditto |
| | | | | | | | | | . | 500 | Forest Divisional Officer, Hill Tracts |
| | | | . | | | | . | | | 1,000 | Ditto |
| | .. | | | | | | | | | 1,000 | Ditto |
| . | | .. | . | . | | | | .. | | 500 | Ditto |
| . | | | . | | | | | | | 15,000 | Collector |
| .. | . | .. | .. | ... | | . | | | | 2,000 | Ditto |
| .. | . | | | | .. | | .. | | . | 800 | Ditto |
| . | ... | | | | . | . | .. | . | .. | 1,200 | Ditto |
| | . | . | . | .. | ... | .. | .. | .. | | 500 | Ditto |
| ... | .. | .. | ... | . | ... | | .. | . | .. | 1,000 | Ditto |
| .. | ... | .. | .. | ... | .. | .. | .. | ... | ... | 500 | Ditto |
| 7,800 | 16,100 | 5,600 | 9,19,550 | 5,09,700 | 55,900 | 21,69,700 | 10,15,400 | 3,85,000 | 2,67,800 | 1,79,26,575 | |

| Ledger Folio No | Name of Person or Fund on whose behalf held | 3½ per cent | | | | 3 per cent of 1896 97 | 4 per cent | | 5 per cent | |
|---|---|---|---|---|---|---|---|---|---|---|
| | | 1842-43 | 1851 55 | 1865 | 1900-01 | | 1915 16 | 1916-17 | 1929-47 | 1945 55 |
| | | Rs | Rs | Rs | Rs | Rs | Rs | Rs | Rs | Rs |
| | Brought forward | 2,15,800 | 1,53 700 | 1,06,08,700 | 2,31,500 | 2,26,600 | 33,800 | 61,600 | 3,65,525 | 6,76,800 |
| | CHITTAGONG DIVISION —*concld* | | | | | | | | | |
| | TIPPERA—*concld* | | | | | | | | | |
| 4931 | Nibaran Chandra Mukerji, Naib, Kazi Ward's Estate | .. | | 200 | .. | | | | | |
| 4932 | Boshi Bhusan Ghose on behalf of Debendra Kumar Bose of Kazi Ward's Estate | . | | 2,000 | . | | | . | | |
| 4935 | Estate of Chandi Baisnavi | . | | 700 | . | | | | .. | |
| 4936 | Anukul Chandra Burman, Nazir .. .. . . | | | 2,000 | . | | . | | | |
| 4937 | Munshi Tajadin Ahmed, Nazir, Chandpur Munsih .. .. | | | .. | .. | 500 | | | | |
| 4939 | Temple Ananda Medal . | | . | 1,500 | | | | . | | .. |
| 4941 | Provident Fund of the District Board Employees . . | .. | . | 10,000 | | | .. | | ... | . |
| | NOAKHALI | | | | | | | | | |
| 4943 | Victoria Medical Scholarship . | | ... | 3,800 | | | | | . | . |
| 4944 | Pana Mia Endowment | | | 2,100 | .. | . | .. | | | . |
| 4445 | Serajul Islam, Sub Tahsildar, Banchanagar . | | | 1,000 | | | | | | |
| 4946 | Hara Nath Das, Sub-Tahsildar | | | 1,000 | | | | | | 400 |
| 4947 | Kazi Chandra Datta, Treasurer | | | 15,000 | | | | | | |
| 4948 | Saroda Kumar Das, Sub-Tahsildar . . | | | 1,000 | . | | | | | |
| 4949 | Mathura Nath Sen, Sub-Tahsildar . | | | 1,000 | | 500 | | | | |
| 4950 | Ashutosh Guha, Sub-Treasurer, Feni ... ... | | | 500 | | | | | | |
| 1956 | Agasti Medal Fund . | | | 500 | . | | | | | |
| 4958 | Dunlop Prize Fund .. | | | 500 | | | | | . | |
| 4960 | Sarada Kumar Chakravarti, Nazir, Sandip Munsifi ... | | . | 1,000 | | . | | | | |
| 4661 | Piyari Mohan Chakravarti, Nazir, Sandip Munsifi | | | 500 | | | | | . | |
| 4962 | Annada Prosad Datta, Nazir, Laksmipur, Munsifi .. ... | . | | 1,000 | . | | | | .. | .. |
| 4964 | Akamat Ali, Nazir . ... | | | 1,000 | | | | . | . | .. |
| 4966 | Noakhali Sadar Dispensary Fund . .. . | | | . | .. | | | | 8,100 | |
| 4968 | Lalit Mohan Guha, Assistant Accountant | | | . | | | | | .. | .. |
| 4969 | Reazat Ali Khan, Head Clerk .. | . | ... | . | . | | | . | | . |
| | GRAND TOTAL ... | 2,15,800 | 1,53,700 | 1,06,55,000* | 2,31,500 | 2,27,600 | 33,800 | 61,600 | 3,68,625 | 6,77,200 |

* Includes Rs 1,000 of the 3½ per cent loan of 1879 on account of No 4415

OFFICE OF THE CONTROLLER OF THE CURRENCY,

THE TREASURY,

CALCUTTA, *the* *May 1923.*

| 5½ PER CENT | | | | 6 PER CENT | | | | | Debentures and Railway shares | Total | Name of officer to whom interest is sent |
|---|---|---|---|---|---|---|---|---|---|---|---|
| 1922 | 1923 | 1925 | 1928 | 1926 | 1927 | 1930 | 1931 | 1932 | | | |
| Rs | Rs | Rs | Rs | Rs | Rs | Rs | Rs | Rs | Rs | Rs | |
| 7,800 | 16,100 | 5,600 | 9,19,550 | 5,09,700 | 55,900 | 21,69,700 | 10,15,100 | 3,85,000 | 2,67,800 | 1,79,26,575 | |
| .. | . | | | | | | | | | 200 | Collector |
| . | | | | | | | | | | 2,000 | Ditto |
| | | | | | | | | | | 700 | District Judge |
| | | | | | | | | | | 2,000 | Ditto |
| | | | | | | | | | | 500 | Ditto |
| | | | | | | | | | | 1,500 | Magistrate |
| | | | | | | | | | | 10,000 | Chairman, District Board |
| | | | | | | | | | | 3,800 | Collector |
| | | | | | | | | | | 2,100 | Ditto |
| | | | | | | | | | | 1,000 | Ditto |
| | | | | | | | | | | 1,400 | Ditto |
| | | | | | | | | | | 15,000 | Ditto |
| | | | | | | | | | | 1,000 | Ditto |
| | | | | | | | | | | 1,500 | Ditto |
| | . | | | | | | | | | 500 | Ditto |
| | | .. | | | | | | | | 500 | Magistrate |
| | .. | | | | | | | | | 500 | Magistrate and Collector |
| .. | | | | | | | | | | 1,000 | District Judge |
| | | | . | . | | | | | | 500 | Ditto |
| . | | . | . | | | | | | | 1,000 | Ditto |
| | .. | | | | | | | | | 1,000 | Ditto |
| ... | .. | | . | . | | . | | | | 3,100 | Chairman, Municipality |
| ... | .. | | . | | | 500 | | | | 500 | Superintendent of Police |
| | .. | | | | .. | 500 | | | | 500 | Ditto |
| 7,800 | 16,100 | 5,600 | 9,19,550 | 5,09 700 | 55,900 | 21,70,700 | 10,15,100 | 3,85,000 | 2,67,800 | 1,79,78,375 | |

H. DENNING,

*Controller of the Currency (offg ).*

## IRRIGATION DEPARTMENT, BENGAL.

***Abstract statement showing the approximate volume of Traffic and the Tollage on Canals in Bengal classed as Major Works and Minor Works and Navigation for the month of May 1923, as compared with the corresponding month of the previous year.***

| Canals | 1923-24. | | | | | |
|---|---|---|---|---|---|---|
| | Weight of Cargo | | Rafts | | Tollage. | |
| | During the month. | To end of the month. | During the month | To end of the month. | During the month. | To end of the month |
| | Tons | Tons | No | No | Rs | Rs |
| ***Major Works*** | | | | | | |
| Midnapore Canal .. | 2,947 | 5,838 | | 12,675 | 2,140 | 6,508 |
| High Tidal Canal ... .. | 9,059 | 19,811 | 324 | 1,198 | 7,822 | 17,874 |
| Total ... | 12,006 | 25,649 | 324 | 13,873 | 9,962 | 24,382 |
| ***Minor Works and Navigation*** | | | | | | |
| Calcutta and Eastern Canals . | 33,268 | 72,962 | 4,147 | 4,661 | 20,881 | 48,268 |
| Tolly's Nala ... ... | 21,366 | 45,742 | 37,500 | 69,400 | 5,508 | 11,946 |
| Madaripur Bil Route ... | 37,492 | 69,934 | 111 | 834 | 9,547 | 18,291 |
| Total ... | 92,126 | 188,638 | 41,758 | 74,895 | 35,936 | 78,505 |
| Magrahat Channels ... | 4,951 | 11,203 | ... | 1,580 | 1,273 | 2,582 |
| Orissa Coast Canal . ... | 5,279 | 11,022 | 1,341 | 2,526 | 1,795 | 3,874 |
| Nadia Rivers ... ... | 1,973 | 3,796 | 106,100 | 152,100 | 1,028 | 1,809 |
| Grand Total .. | 104,329 | 214,659 | 143,199 | 231,101 | 40,032 | 86,770 |

| Canals | 1922-23 | | | | | |
|---|---|---|---|---|---|---|
| | Weight of Cargo. | | Rafts | | Tollage. | |
| | During the month | To end of the month. | During the month | To end of the month | During the month | To end of the month |
| | Tons | Tons | No | No | Rs. | Rs |
| ***Major Works.*** | | | | | | |
| Midnapore Canal ... ... | 3,295 | 8,839 | 100 | 5,100 | 2,583 | 6,592 |
| High Tidal Canal ... ... | 8,165 | 15,221 | 427 | 1,059 | 8,743 | 16,354 |
| Total ... | 11,460 | 24,060 | 527 | 6,159 | 11,326 | 22,946 |
| ***Minor Works and Navigation*** | | | | | | |
| Calcutta and Eastern Canals ... | 34,457 | 75,399 | 90 | 170 | 22,186 | 47,466 |
| Tolly's Nala ... ... | 22,366 | 40,432 | 23,900 | 46,200 | 6,214 | 12,073 |
| Madaripur Bil Route .. | 118,436 | 211,470 | 2,834 | 4,388 | 28,495 | 51,954 |
| Total ... | 175,259 | 327,301 | 26,824 | 50,758 | 56,895 | 1,11,493 |
| Magrahat Channels . | 3,821 | 8,623 | ... | 16,588 | 858 | 1,672 |
| Orissa Coast Canal ... ... | 4,435 | 8,573 | 600 | 2,705 | 1,581 | 2,995 |
| Nadia Rivers ... ... | 1,637 | 3,538 | 52,300 | 67,843 | 859 | 1,613 |
| Grand Total ... | 185,152 | 348,035 | 79,724 | 137,844 | 60,193 | 1,17,773 |

T. C. BHATTACHARYA,
*Assistant Secretary to the Government of Bengal.*

CALCUTTA, *the 9th July 1923.*

## UNIVERSITY OF CALCUTTA BUDGET ESTIMATES FOR 1923-1924 (PASSED BY THE SENATE ON THE 23rd JUNE 1923).

### 1. Fee Fund.

INCOME.

| — | Actuals, 1919-20 | Actuals, 1920-21 | Actuals, 1921-22 | Budget Estimates, 1922 23 | Revised Estimates, 1922 23 | Budget Estimates, 1923-24. | Remarks. |
|---|---|---|---|---|---|---|---|
| I. Fees for Examinations— | Rs | Rs | Rs | Rs | Rs | Rs. | |
| 1 Matriculation (19,000) ... | 2,63,445 | 2,86,875 | 2,86,995 | 2,88,000 | 2,82,990 | 2,85,000 | |
| 2 Intermediate (6,300) ... | 2,15,400 | 2,01,420 | 1,69,500 | 1,71,000 | 1,80,600 | 1,89,000 | |
| 3 B A (Pass) (2,900) ... ... | 1,77,285 | 1,76,105 | 1,25,955 | 1,26,000 | 1,27,305 | 1,30,500 | |
| 4. B.Sc. (Pass) (700) ... ... | 30,350 | 27,450 | 22,725 | 22,500 | 30,060 | 31,500 | |
| 5 Extra fees for B A & B Sc (Hon) (700) | .. | 6,660 | 6,140 | 6 000 | 6,000 | 7,000 | |
| 6. M A & M Sc (550) ... ... | 33,350 | 47,600 | 39,680 | 40,000 | 42,915 | 44,000 | |
| 7 Pre., Int & Final Law (1,700 + 2,500). | 1,42,125 | 1,31,370 | 1,01,040 | 1,02,000 | 1,20,000 | 1,26,000 | |
| 8 M L (5) . ... | 400 | 700 | 200 | 200 | 300 | 500 | |
| 9 D L (1) .. .. | 100 | ... | .. | 100 | .. | 100 | |
| 10 Ph D (5) .. ... | 600 | 400 | 600 | 500 | 500 | 500 | |
| 11 D Sc (2) ... ... | . | 400 | 500 | 500 | 200 | 200 | |
| 12 L.T (20) ... ... ... | 1,260 | 1,650 | 960 | 900 | 540 | 600 | |
| 13 B T (40) ... .. .. | 3,840 | 3,680 | 2,040 | 2,000 | 1,440 | 1,600 | |
| 14 Pr Sc M B .. ... | 8,150 | 8,575 | 11,175 | 11,250 | 10,870 | 11,000 | |
| 15 First M B ... ... | 14,405 | 13,950 | 14,040 | 14,300 | 13,010 | 13,200 | |
| 16. Final M B ... ... | 13,890 | 15,480 | 23,340 | 23,700 | 23,220 | 23,300 | |
| 17 M D, M O & D P.H .. ... | 5,300 | 1,850 | 2,700 | 2,000 | 500 | 500 | |
| 18 I E. ... ... ... | 975 | 1,110 | 1,290 | 1,260 | 1,260 | 1,260 | |
| 19. B E ... ... ... | 1,300 | 1,260 | 1,340 | 1,280 | 1,280 | 1,280 | |
| Total Fees for Examinations ... | 9,12,125 | 9,27,595 | 8,10,220 | 8,13,490 | 8,42,990 | 8,67,040 | |
| II Other Fees— | | | | | | | |
| 1 Graduates' Registration Fees and Subscriptions (Ch IV of Regulations) | 4,830 | 11,100 | 8,650 | 8,700 | 3,000 | 8,500 | |
| 2 Students' Registration Fees (Ch XV of Regulations) | 15,524 | 15,220 | 13,052 | 13,100 | 16,000 | 16,000 | |
| 3 Fees for Diplomas ... ... | 1,175 | 945 | 2,090 | 2,100 | 2,000 | 2,000 | |
| 4. " " Duplicates of Certificates .. | 1,903 | 1,691 | 1,826 | 1,850 | 1,850 | 1,850 | |
| 5 " " Marks ... ... | 15,090 | 8,996 | 7,530 | 7,600 | 7,600 | 7,600 | |
| 6 " " Crossed-Lists ... | 1,265 | 599 | 344 | 350 | 450 | 450 | |
| 7 " " Provisional Certificates . | 2,507 | 3,398 | 3,245 | 3,300 | 1,700 | 2,000 | |
| 8 " " Attending Pali Class ... | 3,261 | 2,430 | 1,847 | 2,000 | 2,400 | 2,500 | |
| 9 " " " Arabic and Persian Classes | 2 361 | 2,461 | 1,788 | 1,800 | 1,500 | 1,500 | |
| 10 " " " Modern Language Classes | 112 | 388 | 253 | 250 | 200 | 250 | |
| 11. " " Scrutinising answer papers | 1,050 | 720 | 450 | 400 | 650 | 650 | |
| 12 Re-entry Fees .. ... | 100 | 497 | 224 | 200 | 150 | 150 | |
| Total other Fees ... | 49,178 | 48,445 | 41,299 | 41,650 | 37,500 | 43,450 | |
| III Miscellaneous— | | | | | | | |
| 1. Printing work done for Mathematical Society<br>2. Sale-proceeds of old answer papers<br>3 Refunds ... ...<br>4. Miscellaneous ... ...<br>5 Fees for change of Names ...<br>6 Age-correction Fees ... ... | 8,082 | 16,777 | 15,443 | 15,500 | 15,500 | 15,500 | |
| 7 Migration Fees ... ... | ... | ... | 4,160 | 4,200 | 7,000 | 7,000 | |
| 8. Non-Collegiate Students' Fees ... | ... | .. | 5,730 | 5,800 | 5,000 | 5,500 | |
| Total Miscellaneous ... | 8,082 | 16,777 | 25,333 | 25,500 | 27,500 | 28,000 | |

1. Fee Fund—*concld.*

INCOME—*concld.*

| — | Actuals, 1919-20 | Actuals, 1920-21. | Actuals, 1921-22 | Budget Estimates, 1922-23. | Revised Estimates, 1922-23 | Budget Estimates 1923-24 | Remarks. |
|---|---|---|---|---|---|---|---|
| | Rs | Rs. | Rs | Rs. | Rs | Rs | |
| IV. Sale proceeds of of University Publications | 46,385 | 1,12,808 | 62,774 | 60,000 | 60,000 | 70,000 | |
| V Calcutta Review ... | ... | ... | 6,543 | 6,500 | 6,500 | 12,000 | |
| VI Interest on deposits ... | 875 | 4,360 | ... | ... | ... | ... | |
| VII Sale-proceeds of investments ... | ... | 2,19,937 | ... | ... | ... | ... | |
| VIII. Contribution from the Law College Fund on account of house-rents | ... | 12,795* | ... | 6,000 | 67,000 | 6,000 | |
| IX. Contribution from the General Administration Fund | 9,000 | 15,000 | 12,000 | ... | ... | 2,500 | |
| X. Government grant for students' welfare. | ... | ... | ... | 4,000 | 4,000 | ... | |
| XI. Government grant to meet deficit ... | ... | ... | ... | ... | 2,50,000 | 3,00,000 | |
| XII. Contribution from Sir Bipinkrishna Bose Scholarship Fund to meet deficit | .. | ... | .. | ... | ... | 709 | |
| Total ... | 10,25,645 | 13,57,717 | 9,58,169 | 9,57,140 | 12,95,490 | 13,28,990 | |
| Opening Balance ... | 1,89,743 | —2,48,108 | —1,48,055 | —3,63,548 | —3,63,548 | —1,97,234 | |
| GRAND TOTAL ... | 12,14,388 | 11,08,609 | 8,10,114 | 5,93,592 | 9,31,942 | 11,31,756 | |

EXPENDITURE

| | | | | | | |
|---|---|---|---|---|---|---|
| I. Supervising staff and establishment— | | | | | | |
| 1 Registrar (800—50—1,000) E. A. (150) | 11,253 | 13,352 | 12,650 | 14 950 | 14,950 | 14,800 |
| 2. Controller of Examinations (1,000) ... | 12,000 | 13,150 | 11,000 | 13,000 | 13,000 | 12,000 |
| 3 Assistant Registrar (250—25—500)... | 5,521 | 4,718 | 3,191 | 3,400 | 3,750 | 3,800 |
| 4. Assistant Controller (250—25—500)... | 2,500 | 2,789 | 3,086 | 3,350 | 3,850 | 3,800 |
| 5. Assistants (Registrar's Department)— 1 (200—20—300), 3 (150—10—200), 7 (100—10—150), 5 (75—10—125), 12 (60—5—100), 8 (50—5—80), 2 (50—5—75), 5 (40—4—60), 1 (80), 1 (60), 1 (50), 1 (25) | 48,121 | 50,486 | 53,486 | 54,500 | 54,000 | 57,000 |
| 6. Assistants (Controller's Department)— 4 (100—10—150), 2 (75—10—125), 7 (60—5—100), 2 (50—5—80), 12 (40—4—60). | 20,808 | 22,184 | 24,685 | 26,000 | 26,750 | 28,500 |
| 7 Menials (Registrar's Department)— Durwans—3, Jamadar—1, Duftries—3, Peons—25, Mali—1, Sweepers—9, 1 (30), 4 (19), 7 (18), 22 (17), 8 (16) | 8,773 | 8,938 | 8,812 | 9,000 | 9,150 | 9,150 |
| Menials (Controller's Department)— 4 Duftries, 3 Durwans, 14 Peons, 1 (20), 1 (18), 18 (17), 1 (14). | 4,200 | 4,528 | 4,457 | 4,500 | 4,650 | 4,650 |
| 9. University Mess Superintendents, 4 (30), 1 (25), 5 (20) and Medical Officer 1 (75), Durwans 5 (13). | 4,241 | 4,362 | 4,980 | 5,600 | 4,200 | 4,650 |
| 10. Sub-Agent, Sir T. N. Palit Estate (60) and Menial (94) | 1,368 | 1,476 | 1,611 | 1,700 | 1,700 | 1,850 |
| Total Supervising Staff and Establishment ... | 1,18,785 | 1,26,073 | 1,27,958 | 1,36,000 | 1,36,000 | 1,40,200 |
| II. Teaching Staff— | | | | | | |
| 1 French Lecturer 1 (200) ... | 1,200 | 2,300 | 2,200 | 2,600 | 2,600 | 2,400 |
| 2 Pali Teachers 2 (103), 5 (25) ... | 2,775 | 3,900 | 3,575 | 4,250 | 4,250 | 3 900 |
| 3. Arabic and Persian Teachers 4 (75) ... | 2,262 | 3,525 | 2,959 | 3,900 | 3,900 | 3,600 |
| Total Teaching Staff ... | 6,237 | 9,725 | 8,734 | 10,750 | 10,750 | 9,900 |

* Contribution from the Capital [illegible]

1. Fee Fund—*contd*

EXPENDITURE—*contd*

| — | Actuals, 1919-20 | Actuals, 1920-21. | Actuals, 1921-22 | Budget Estimates, 1922-23 | Revised Estimates, 1922-23 | Budget Estimates, 1923-24 | Remarks |
|---|---|---|---|---|---|---|---|
| | Rs | Rs | Rs | Rs | Rs | Rs | |
| III Examination Expenses— | | | | | | | |
| 1 Remuneration to Examiners— | | | | | | | |
| (a) Matriculation ... | 83,221 | 92,150 | 73,877 | 76,000 | 80,500 | 79,500 | |
| (b) Intermediate .. | 68,600 | 63,695 | 49,225 | 43,500 | 41,000 | 44,300 | |
| (c) B A and B Sc . | 49 637 | 64,922 | 50,161 | 36,500 | 39,500 | 41,000 | |
| (d) M A and M Sc ... | 32,139 | 34,360 | 13,504 | 13,500 | 15,500 | 15 000 | |
| (e) Ph D and D Sc ... | 2,000 | 3,100 | 3,100 | 3,000 | 3,000 | 2,100 | |
| (f) L.T and B T . . | 975 | 397 | 1 088 | 1,200 | 800 | 1 000 | |
| (g) Law ... | 25,470 | 23,011 | 7,602 | 15,000 | 14 200 | 15,000 | |
| (h) Medical ... | 54,648 | 19,240 | 41,074 | 42,300 | 44,000 | 44,100 | |
| (i) Engineering . . | 4,148 | 3,940 | 3,797 | 4,000 | 4,100 | 4,100 | |
| 2 Expenses of Examinations at centres | 36,136 | 33,950 | 22,351 | 53,000 | 53,000 | 36,000 | |
| 3 Answer-books ... | 18,300 | 670 | 1,161 | 30,000 | 30,000 | 30,000 | |
| Total Examination Expenses ... | 3,75,274 | 3,39,435 | 2,66,940 | 3,18,000 | 3 25 600 | 3,11,100 | |
| IV. Scholarships and Prizes— | | | | | | | |
| 1 Jubilee Post Graduate Scholarships | 8,384 | 8 448 | 8,128 | 9,216 | 9,500 | 9 216 | |
| 2 Prizes and Medals .. | 13,889 | 13,120 | 11,878 | 20 000 | 20,000 | 14,000 | |
| Total Scholarships and Prizes ... | 22,273 | 21,568 | 20,006 | 29,216 | 29,500 | 23 216 | |
| V. Library— | | | | | | | |
| 1 Librarian (150—10—200) ... | 3,801 | 1,730 | 1,853 | 1,970 | 1,980 | 2,100 | |
| 2 Library Assistants 1 (60—5—100) | | 1,548 | 1,405 | 1,600 | 990 | 1,100 | |
| 3 Menials 3 (17) ... | | 632 | 599 | 650 | 650 | 650 | |
| 4. Books & Mss ... | 8,758 | 13,085 | 17,693 | 16,000 | 15,500 | 10,000 | |
| 5. Book-binding . | 4,158 | 3,659 | 1,174 | 2,000 | 2,500 | 2,500 | |
| Total Library ... | 16,717 | 20,654 | 23,324 | 22,220 | 21,620 | 16,350 | |
| VI Printing— | | | | | | | |
| A University Press— | | | | | | | |
| 1. Superintendent (200—20—300) | 34,587 | 42,574 | 42,413 | 44,000 | 46,000 | 48,000 | |
| 2 Readers 1(100—10—150), 1(50—5—75), 3(40—4—60), 2(30—2—40), 1(50), 1(40), and Section holders 1(40—4—60), 1(40—2—50), Computors 1(40—4—60), 1(30—2—40), Assistants 1(40—4—60), 1(25—2—35), 2(30) Menials 1(17), 2(16) 2(15) ... Compositors (Piece-rates) ... | | | | | | 3,600 | |
| 3. Types and Furniture . ... | 4,313 | 11 039 | 1,010 | 2,500 | 2,500 | 3,500 | |
| 4. Paper, Ink, Glue, etc .. | 46,404 | 52,363 | 16,590 | 45,000 | 45,000 | 35,000 | |
| 5 Duftries' work ... | 14,096 | 21,275 | 8,322 | 14,000 | 14,000 | 15,000 | |
| 6. Contingencies ... | 435 | 249 | 328 | 350 | 350 | 350 | |
| 7 Insurance of building ... | 375 | 375 | 375 | 375 | 375 | 375 | |
| 8. Municipal taxes ... | 532 | 532 | 532 | 532 | 625 | 650 | |
| 9. Repair of motors ... | 8,684 | ... | ... | 500 | 250 | 250 | |
| 10. Electric expenses ... | ... | ... | ... | ... | 500 | 500 | |
| 11 Machines ... | ... | ... | ... | ... | ... | 2,000 | |
| B Printing at outside presses— | | | | | | | |
| 1. Question papers ... | 13,198 | 26,582 | 20,659 | 24,000 | 24,000 | 24,000 | |
| 2. Calendars ... | 5,000 | 12,038 | ... | 6,500 | 10,450 | 7,000 | |
| 3 Selections ... | 22,376 | 2,649 | 2,560 | 2 500 | 2,500 | 12,000 | |
| 4. Theses, Notices, Examination results, etc. | 651 | 7,066 | 3,188 | 15,000 | 13,500 | | |
| Total Printing ... | 1,51,651 | 1,76,742 | 95,977 | 1,55,257 | 1,60,050 | 1,52,225 | |

### 1. Fee Fund—*concld*

EXPENDITURE—*concld.*

| | Actuals, 1919-20 | Actuals, 1920-21 | Actuals, 1921-22 | Budget Estimates, 1922-23. | Revised Estimates, 1922-23 | Budget Estimates, 1923-24. | Remarks. |
|---|---|---|---|---|---|---|---|
| | Rs | Rs | Rs | Rs | Rs | Rs | |
| VII Contribution to Post-Graduate Teaching, Science College, etc — | | | | | | | |
| 1 To Post-graduate Teaching Fund— (a) one-third of fees for Matriculation, I A I Sc, B A and B Sc Examinations | 2,28,476 | 2,33,070 | 2,03,771 | 2,04,500 | 2,08,200 | 2,14,300 | |
| (b) Additional Contribution ... | 1,66,050 | 1,67,342 | 2,65,945 | 61,356 | 63,506 | 2,05,500 | |
| 2 To Science College ... | 48,946 | 34,738 | 53,365 | 59,350 | 64,750 | 80,406 | |
| 3 To George V Professorship Fund and Palit Fund | 2,750 | 1,000 | ... | ... | ... | ... | |
| 4 To house allowance of Professors | ... | 4,200 | 8,227 | 7,200 | 7,200 | 14,400 | |
| 5 To Upendranath Mitra Scholarship Fund | .. | ... | ... | ... | ... | 600 | |
| Total Contribution ... | 4,46,222 | 4,40,350 | 5,31,308 | 3,32,406 | 3,43,656 | 5,18,206 | |
| VIII. Maintenance and Repairs of Buildings, etc — | | | | | | | |
| 1 Repairs and additions to Buildings other than the Science College | 8,569 | 16,309 | 2,561 | 3,000 | 3,000 | 5,000 | |
| 2. Insurance of Senate House, Darbhanga Library and Science College Buildings | 1,375 | 1,375 | 1,375 | 1,375 | 1,375 | 1,375 | |
| 3 Municipal Taxes (excluding Palit House). | 16,073 | 16,073 | 17,048 | 12,700 | 12,800 | 14,000 | |
| Total Maintenance of Buildings .. | 26,017 | 33,757 | 20,984 | 17,075 | 17,175 | 20,375 | |
| X. Supplies and Services and Contingencies— | | | | | | | |
| 1. Stationery .. ... | 14,341 | 15,065 | 10,749 | 12,000 | 12,000 | 12,000 | |
| 2 Stamps ... ... | 9,900 | 10,637 | 9,755 | 10,500 | 10,500 | 10,500 | |
| 3. Furniture and Office equipment .. | 11,686 | 4,907 | 2,143 | 2,500 | 2,000 | 2,500 | |
| 4 Convocation Expenses .. | 2 377 | 1,399 | 3,631 | 3,000 | 2,000 | 1,000 | |
| 5 Law Expenses ... ... | 3,050 | 3,379 | 1,732 | 2,500 | 500 | 1,500 | |
| 6 Travelling Expenses ... | ... | 2,000 | ... | .. | ... | ... | |
| 7. Office Contingencies .. | 8,046 | 9,698 | 10,313 | 10,500 | 10,500 | 10,500 | |
| 8 Electric Expenses .. . | 6,024 | 3,450 | 3,276 | 3,500 | 4,500 | 4,500 | |
| 9 Telephone Charges . .. | 200 | 200 | 770 | 3,000 | 600 | 575 | |
| 10 Electric Lift .. ... | ... | 737 | 478 | 1,500 | 2,000 | 1,500 | |
| 11 Sanitary Repairs ... ... | ... | 1,237 | 548 | 1,000 | 500 | 1,000 | |
| 12 Short-hand Reporter's Charges ... | 1,710 | 925 | 1,100 | 1 200 | 1,400 | 1,200 | |
| 13 University Extension Lectures ... | ... | ... | 500 | ... | ... | ... | |
| Total Supplies and Services and Contingencies | 57,921 | 57,634 | 44,995 | 51,200 | 46,500 | 46,775 | |
| X. Miscellaneous— | | | | | | | |
| 1 Pension ... ... | 2,953 | 3,549 | 4,278 | 4,250 | 4,250 | 4,250 | |
| 2 Honorarium for editing Selections and Text Books. | 12,500 | 2,504 | 1,100 | 1,500 | 1,500 | 1,500 | |
| 3. Gowns ... ... | 430 | 285 | 2,884 | 2,000 | 2,000 | 1,000 | |
| 4. Refund of Fees ... ... | 2,204 | 1,376 | 2,918 | 3,000 | 3,000 | 3,000 | |
| 5. Portraits of Chancellors and Vice-Chancellors | ... | ... | 443 | 500 | 500 | 500 | |
| 6. Allowance for Research Assistants. | ... | 1,858 | 275 | 300 | 25 | ... | |
| 7. Investment ... ... | 2,19,938 | ... | ... | ... | ... | ... | |
| 8. Students' Welfare— | | | | | | | |
| (a) Boats ... ... | ... | 21,159 | 15,352 | 19,500 | 20,550 | 16,100 | |
| (b) Medical Examination of Students. | ... | | | | | | |
| 9 Calcutta Review ... ... | ... | ... | 6,186 | 6,500 | 6,500 | 12,000 | |
| 10 Small-pox Hospital ... ... | 4,374 | ... | ... | ... | ... | ... | |
| Total Miscellaneous ... | 2,42,599 | 30,726 | 33,436 | 37,550 | 38,325 | 38,350 | |
| Total Expenditure ... | 14,63,496 | 12,56,664 | 11,73,662 | 11,09,574 | 11,29,176 | 12,76,697 | |
| Closing Balance* ... ... ... | -2,49,108 | -1,48,055 | -3,63,548 | -5,16,082 | -1,97,234 | -1,44,941 | |
| GRAND TOTAL ... | 12,14,388 | 11,08,609 | 8,10,114 | 5,93,592 | 9,31,942 | 11,31,756 | |

## II. Post-Graduate Teaching in Arts and Science.

INCOME

| | Actuals, 1919 20 | Actuals, 1920-21 | Actuals 1921-22 | Budget Estimate, 1922-23. | Revised Estimates, 1922-23. | Budget Estimates, 1923-24 | Remarks. |
|---|---|---|---|---|---|---|---|
| | Rs | Rs. | Rs | Rs | Rs. | Rs. | |
| 1. Government Grant ... ... | 15,000 | 15,000 | 15,000 | 15,000 | 15,000 | 15,000 | |
| 2. Fees from students ... ... | 88,766 | 88,756 | 1,05,792 | 1,05,000 | 1,05,000 | 1,05,000 | |
| 3 Fees from students attached to the Presidency College | ... | 20,743 | 17,484 | 52,000 | 36,800 | 15,500 | |
| 4. Refund and Miscellaneous ... ... | 2,895 | 14 | 3,175 | 1,500 | 100 | 500 | |
| 5 Share of Examination Fees (one-third) ... | 2,28,476 | 2,33,070 | 2,03,771 | 2,04,500 | 2,08,200 | 2,14,300 | |
| Total ... | 3,35,137 | 3,57,583 | 3,45,222 | 3,78,000 | 3,65,100 | 3,50,300 | |
| 6 Contribution from Fee Fund ... | 1,66,050 | 1,67,342 | 2,65,945 | 61,356 | 63,506 | 2,08,500 | |
| Total .. | 5,01,187 | 5,24,925 | 6,11,167 | 4,39,356 | 4,28,606 | 5,58,800 | |
| Opening balance .. | 610 | 23,500 | —23,200 | 76,654 | 76,654 | ... | |
| GRAND TOTAL ... | 5,01,797 | 5,48,425 | 5,87,967 | 5,16,010 | 5,05,260 | 5,58,800 | |

EXPENDITURE

| | | | | | | | |
|---|---|---|---|---|---|---|---|
| A POST-GRADUATE TEACHING IN ARTS. | | | | | | | |
| I —PROFESSORS AND TEACHERS. | | | | | | | |
| | Rs | | | | | | |
| 1 Professors and Teachers ... | 3,36,000 | 3,23,419 | 3,88,215 | 3,61,970 | 3 36,000 | 3,26,000 | 3,88,000 |
| Amount kept in abeyance in 1922-23 ... ... | 52,000 | | | | | | |
| 2 Pension contribution of Teachers ... | | 1,336 | 900 | | .. | .. | |
| 3 Travelling allowance of Teachers .. | | 3,890 | 4,469 | 3,364 | 2,500 | 1,600 | 2,500 |
| II.—SCHOLARSHIPS | | | | | | | |
| Scholarships 2 (50) 12 (25), 28 (15) ... | | 4,163 | 7,520 | 7,715 | 9 840 | 9,840 | 9,840 |
| III —OFFICE. | | | | | | | |
| 1. Secretary 1 (500—50—750) .. ... | | 6,800 | 2,400 | 5,500 | 6,500 | 6,500 | 6,600 |
| 2. Assistants 1 (100—10—150), 1 (75—10—125), 2 (50—5—75), 9 (40—4—60), 1 (50), 4 (40), 1 (30), 1 (25), 1 (20) ... | | 21,486 | 23,053 | 19,235 | 19,300 | 19,000 | 19,300 |
| 3 Duftries and Bearers 2 (20), 1 (19), 17 (17) | | | | 4,011 | 4,200 | 4,250 | 4,200 |
| 4. Contingencies and stationery ... | | 2,180 | 2,637 | 1,616 | 1,500 | 1,000 | 1,500 |
| 5 Furniture ... ... ... | | 1,170 | 1,957 | 692 | 500 | 100 | 500 |
| 6. Refund ... ... ... | | 2,512 | 72 | 311 | 500 | 500 | 500 |
| 7. Proportion of electric expenses . ... | | 6,024 | 3,450 | 3,276 | 3,500 | 3,000 | 3,500 |
| 8 " municipal taxes ... ... | | ... | ... | .. | 2,200 | 2,300 | 2,300 |
| IV —LIBRARY. | | | | | | | |
| Books and Periodicals ... ... | | 17,444 | 16,751 | 6,092 | 10,000 | 10,000 | 8,000 |
| Goods for the Anthropology Department ... | | ... | ... | 824 | 1,000 | 1,000 | 1,000 |
| V. | | | | | | | |
| Indian Vernacular Scheme ... ... | | 3,315 | 1,552 | 3,075 | 2,500 | 2,500 | 2,500 |
| VI. | | | | | | | |
| Provident Fund ... ... | | 3,621 | 12,082 | 10,416 | 11 000 | 11,000 | 11,000 |
| Total (Arts) ... | | 3,97,360 | 4,65,058 | 4,28,097 | 4,11,040 | 3,98,590 | 4,61,240 |

## II.—Post-Graduate Teaching in Arts and Science—*contd.*

### EXPENDITURE—*concld.*

| | Actuals, 1919-20. | Actuals, 1920-21 | Actuals, 1921-22 | Budget Estimates, 1922-23 | Revised Estimates, 1922-23 | Budget Estimates, 1923-24 | Remarks |
|---|---|---|---|---|---|---|---|
| B POST-GRADUATE TEACHING IN SCIENCE | Rs | Rs | Rs | Rs | Rs | Rs. | |
| I. PROFESSORS AND TEACHERS | | | | | | | |
| Professors and Teachers ... Rs 74 900 Amount kept in abeyance in 1922-23 ... " 5,100 | 57,473 | 84,617 | 67,559 | 82,800 | 85,000 | 80,000 | |
| Travelling Allowance of Teachers ... | ... | 1,162 | 697 | 500 | ... | ... | |
| II. OFFICE | | | | | | | |
| 1 Secretary 1 (500) .. | 6,000 | 6,000 | 5,500 | 6,500 | 6 500 | 6,000 | |
| 2 Assistants 1 (60-5-100), 1 (50-5 75), 1 (40 4 60) | 3,508 | 3,855 | 2,401 | 2,600 | 2,600 | 3,000 | |
| 3 Duftries and Bearers 1 (20), 2 (18), 1 (16) | | | 864 | 870 | 870 | 960 | |
| 4. Contingencies and Stationery .. | 317 | 146 | 105 | 100 | 100 | 200 | |
| 5 Furniture | 398 | 40 | .. | 100 | 50 | 250 | |
| 6. Refund .. | 309 | 156 | .. | ... | 50 | ... | |
| III LIBRARY | | | | | | | |
| Books and Periodicals ... | 12,235 | 8,472 | 4,758 | 10,000 | 10,000 | 6,000 | |
| IV. | | | | | | | |
| Provident Fund .. | 737 | 2,119 | 1,332 | 1,500 | 1,500 | 1,550 | |
| Total (Science) | 80,937 | 1,06,567 | 83,216 | 1,04,970 | 1,06 670 | 97,560 | |
| GRAND TOTAL (ARTS AND SCIENCE) .. | 4,78,297 | 5,71,625 | 5,11,313 | 5,16,010 | 5,05,260 | 5,58,800 | |
| Closing Balance .. | 23,500 | —23,200 | 76,654 | ... | .. | ... | |
| GRAND TOTAL ... | 5,01,797 | 5,48,425 | 5,87,967 | 5,16,010 | 5,05,260 | 5,58,800 | |

## III. University College of Science and Technology.

### INCOME.

| | Rs. | Rs | Rs | Rs | Rs | Rs |
|---|---|---|---|---|---|---|
| RECEIPTS FROM PALIT TRUST— | | | | | | |
| Contribution from First Trust ... | 28,565 | 30,645 | 29,298 | 24,000 | 24,000 | 24,000 |
| " " Second Trust ... | 20,100 | 24,900 | 12,847 | 18,000 | 18,500 | 20,700 |
| RECEIPTS FROM GHOSE TRUST— | | | | | | |
| Contribution from First Trust — .. | 37,336 | 75,133 | 38,875 | 39,900 | 39,900 | 42,200 |
| " " Second Trust ... | ... | ... | 55,523 | 61,200 | 62,700 | 35,596 |
| RECEIPTS FROM KHAIRA FUND— | | | | | | |
| Contribution ... | ... | ... | 11,325 | 26,100 | 24,375 | 21,300 |
| RECEIPTS FROM FEE FUND— | | | | | | |
| Contribution for Laboratories and Repairs | 48,946 | 34,738 | 53,365 | 59,350 | 64,750 | 80,406 |
| " House Allowances of Ghose and Khaira Professors. | ... | ... | 5,826 | 4,800 | 4,800 | 9,600 |
| GOVERNMENT GRANT ... | 12,000 | 12,000 | 12,000 | 12,000 | 12,000 | 12,000 |
| MISCELLANEOUS ... | 167 | 472 | 241 | ... | ... | ... |
| Total ... | 1,47,114 | 1,77,888 | 2,19,800 | 2,45,350 | 2,51,025 | 2,45,802 |

## III.—University College of Science and Technology —*contd.*

EXPENDITURE.

| — | Actuals, 1919-20 | Actuals, 1920-21 | Actuals 1921-22 | Budget Estimates, 1922-23 | Revised Estimates, 1922-23 | Budget Estimates, 1923-24 |
|---|---|---|---|---|---|---|
| **PHYSICS** | Rs. | Rs | Rs | Rs | Rs | Rs |
| 1. Palit Professor (800—50—1,000), H A (125) | 12,248 | 12,847 | 13,448 | 13,500 | 13,500 | 13,500 |
| 2 Ghose Professor (500), H A. (100) | 6,000 | 6,000 | 7,200 | 7,200 | 7,200 | 7,200 |
| 3. Ghose Professor of Applied Physics ... | ... | 3,000 | ... | ... | . | ... |
| 4 Guruprasad Singh, Professor (500) ... | ... | ... | 3,400 | 6,000 | 6,000 | 7,200 |
| 5. Assistant Professor, Laboratory Assistant and Electrician 1 (200—25—300), 1 (75), 1 (50) | 4,100 | 3,000 | 4,222 | 3,900 | 3,375 | 4,800 |
| 6 Laboratory Staff 1 (150), 1 (40—4—60), 1 (17), 2 (16), 4(15), 1 (14) | 3,092 | 3,189 | 3,811 | 3,950 | 3,950 | 3,950 |
| 7 Equipment and Working Expenses ... | 18,910 | 17,207 | 6,267 | 8,000 | 8,000 | 8,000 |
| 8 Research grant for the Guruprasad Singh Professor | | . | .. | 1,500 | 1,500 | 500 |
| 9 Research grant for the Palit Professor... | ... | ... | ... | ... | ... | ... |
| 10 " " " Ghose " ... | ... | ... | ... | 3,400 | 3 400 | 1,500 |
| Total ... | 44,350 | 45,243 | 38,348 | 47,450 | 46,925 | 46,650 |
| **APPLIED PHYSICS** | | | | | | |
| Ghose Professor (500), H. A. (100) ... | ... | ... | 7,200 | 7,200 | 7,200 | 7,200 |
| Laboratory boy (20) ... ... | ... | ... | .. | .. | . | 240 |
| Equipment and Working Expenses ... | ... | ... | 1,530 | 10,000 | 10 000 | 5,000 |
| Total ... | ... | . | 8,730 | 17,200 | 17,200 | 12,440 |
| **CHEMISTRY** | | | | | | |
| 1 Palit Professor (800—50—1,000) ... | 11,592 | 11,743 | 12,000 | 12,000 | 12 0 0 | 12,000* |
| 2 Ghose Professor (500), H A (100) ... | 6,000 | 6,900 | 7,200 | 7,200 | 7,200 | 7,200 |
| 3 Ghose Professor of Applied Chemistry | ... | 6,000 | ... | .. | . | ... |
| 4. Guruprasad Singh Professor (500) ... | ... | .. | 4,400 | 6 000 | 6,000 | 7,200 |
| 5 Assistant Professor, Demonstrator and Assistant 2 (200—25—300), 1 (150), 1 (75—10—125) | 6,000 | 4,758 | 8,625 | 8,400 | 8,925 | 9,600 |
| 6 Laboratory Staff 1 (75—5—100), 1 (40—4—60), 1 (30), 1 (25), 2 (16), 1 (15), 5 (14) | 2,752 | 4,536 | 3,382 | 3,500 | 3,650 | 3,850 |
| 7 Research grant for the Guruprasad Singh Professor. | ... | ... | 1,849 | 1,500 | 1,500 | 500 |
| 8. Research grant for the Palit Professor | .. | ... | ... | ... | .. | .. |
| 9. " " " Ghose " ... | ... | ... | . | 3 400 | 3,400 | 1 500 |
| 10. Equipment and Working Expenses ... | 14,688 | 26,171 | 7,090 | 8,000 | 13,350 | 8,000 |
| Total ... | 40,032 | 59,113 | 44,546 | 50,000 | 56,025 | 49,850 |
| **APPLIED CHEMISTRY** | | | | | | |
| 1 Ghose Professor (500), H A (100) ... | ... | ... | 7,200 | 7,200 | 7,200 | 7,200 |
| 2. Demonstrator, Draftsman and Mechanic 1 (200), 1 (150), 1 (90) | ... | ... | 3,703 | 4,200 | 4,200 | 5,280 |
| 3. Menials 3 (16) ... ... | ... | ... | 560 | 600 | 600 | 792 |
| 4. Equipment and Working Expenses ... | ... | ... | 12,090 | 10,000 | 10,000 | 5,000 |
| Total ... | ... | ... | 23,553 | 22,000 | 22,000 | 18,272 |
| **APPLIED MATHEMATICS** | | | | | | |
| 1 Ghose Professor (500), H. A (100) ... | 6,000 | 6,000 | 6,160 | 4,500 | 4,500 | 7,200 |
| 2. Student-Assistants and Menials 2 (20), 2 (15). | 815 | 822 | 695 | 840 | 500 | 840 |
| 4. Working Expenses ... ... | 62 | 1,384 | 96 | 100 | 50 | 100 |
| Total ... | 6,877 | 8,206 | 6,951 | 5,440 | 5,050 | 8,140 |

* Gift to the Science College. (It is proposed to keep the amount in Fixed Deposit with the Imperial Bank of India for the present.)

## III. University College of Science and Technology—*concld.*

EXPENDITURE—*concld*

| | Actuals, 1919-20 | Actuals, 1920-21. | Actuals, 1921-22 | Budget Estimates, 1922-23 | Revised Estimates, 1922-23 | Budget Estimates, 1923-24. | Remarks. |
|---|---|---|---|---|---|---|---|
| BOTANY. | Rs | Rs. | Rs | Rs. | Rs. | Rs. | |
| 1. Ghose Professor (500) ... ... | 6,000 | 6,000 | 6,000 | 6,000 | 6,000 | 6,000 | |
| 2. Laboratory Staff 1 (60—10—100), 1 (70—5—95), 3 (16), 6 (15) | 1,702 | 1,681 | 2,925 | 3,500 | 3,500 | 3,680 | |
| 3. Research grant for the Ghose Professor ... | ... | ... | 1,183 | 3,400 | 3,400 | 1,500 | |
| 4 Microscopes ... ... ... | ... | ... | 18,070 | ... | ... | .. | |
| 5. Equipment and Working Expenses ... | 9,018 | 14,678 | 2,918 | 3,500 | 3,500 | 3,500 | |
| Total ... | 16,720 | 22,359 | 31,096 | 16,400 | 16,400 | 14,680 | |
| AGRICULTURE. | | | | | | | |
| 1 Guruprasad Singh Professor (500) .. | .. | ... | 3,000 | 6,000 | 6,000 | 7,200 | |
| 2 Monials 2 (16) ... ... ... | ... | ... | ... | 350 | 350 | 390 | |
| 3 Research grant for the Guruprasad Singh Professor | .. | ... | ... | 1,500 | 1,500 | 500 | |
| Total ... | ... | ... | 3,000 | 7,850 | 7,850 | 8,090 | |
| ZOOLOGY | | | | | | | |
| 1. Laboratory Staff 1 (40—5—60), 2 (50), 1 (40), 2 (16) | 292 | 966 | 994 | 1,480 | 2,100 | 2,750 | |
| 2. Equipment and Working Expenses ... | 16,153 | 6,845 | 1,313 | 8,500 | 8,500 | 8,500 | |
| Total ... | 16,445 | 7,811 | 2,307 | 9,980 | 10,600 | 11,250 | |
| EXP PSYCHOLOGY AND PHYSIOLOGY | | | | | | | |
| 1. Laboratory Staff 1 (40), 2 (20), 3 (16) ... | 1,127 | 1,483 | 1,316 | 1,550 | 1,550 | 1,540 | |
| 2 Equipment and Working Expenses . | 2,161 | 4,284 | 10,582 | 7,000 | 7,000 | 7,000 | |
| Total ... | 3,288 | 5,767 | 11,898 | 8,550 | 8,550 | 8,540 | |
| BIO-CHEMISTRY. | | | | | | | |
| 1 Laboratory Staff 1 (150), 1 (16) ... | 864 | 1,382 | 1,568 | 1,980 | 2,150 | 2,000 | |
| 2. Equipment and Working Expenses ... | 2,532 | 1,245 | 52 | 1,000 | 1,000 | 2,500 | |
| Total ... | 3,396 | 2,627 | 1,620 | 2,980 | 3,150 | 4,500 | |
| WORKSHOP | | | | | | | |
| 1 Mechanics, Turner, Carpenter 1 (90), 1 (60), 1 (50), 2 (35) | 1,808 | 1,670 | 2,068 | 3,250 | 2,550 | 3,240 | |
| 2. Appliances ... ... ... | 121 | 5,045 | 1,428 | 1,000 | 1,200 | 2,500 | |
| 3 Workshop for Applied Chemistry and Physics. | ... | ... | 25,000 | 25,000 | 25,000 | 5,000 | |
| Total ... | 1,929 | 6,715 | 28,496 | 29,250 | 28,750 | 10,740 | |
| GENERAL. | | | | | | | |
| 1. Durwans 1 (20), 1 (18), Malis 1 (16), 1 (14), Sweepers 3 (12). | 1,127 | 1,214 | 1,212 | 1,250 | 1,250 | 1,250 | |
| 2. Gas and Electricity ... ... | 2,389 | 3,508 | 4,007 | 4,000 | 4,000 | 4,000 | |
| 3. Repairs and alterations ... ... | ... | 4,400 | 1.403 | 8,000 | 8,000 | 30,000 | |
| Total ... | 3,516 | 9,122 | 6,622 | 13,250 | 13,250 | 35,250 | |
| SCHOLARSHIP. | | | | | | | |
| 1. Palit Research Scholars 2 (100), 2 (75), 1 (50). | 5.725 | 6,050 | 3,850 | 4,200 | 4,700 | 4,800 | |
| 2 Ghose Research Scholars 8 (75), 4 (75) | 4,836 | 4,875 | 7,758 | 7,200 | 8,700 | 10,800 | |
| 3. Khaira Research Scholars 2 (75) ... | ... | ... | 525 | 3,600 | 1,875 | 1,800 | |
| Total ... | 10,561 | 10,925 | 12,133 | 15,000 | 15,275 | 17,400 | |
| GRAND TOTAL (Science College) ... | 1,47,114 | 1,77,888 | 2,19,300 | 2,45,350 | 2,51,025 | 2,45,802 | |

## IV. University Law College and Hardinge Hostel.

### A. Law College.

INCOME.

| — | Actuals, 1919-20 | Actuals, 1920-21. | Actuals, 1921-22. | Budget Estimates, 1922-23 | Revised Estimates, 1922-23 | Budget Estimates, 1923-24 | Remarks |
|---|---|---|---|---|---|---|---|
| | Rs. | Rs. | Rs | Rs. | Rs | Rs | |
| 1. Fees from students .. .. | | | | | | | |
| 2 Admission fees .. .. | 1,75,737 | 1,69,565 | 1,66,542 | 1,60,000 | 1,88,000 | 1,67,300 | |
| 3. Percentage fees ... | | | | | | | |
| 4. Government Grant .. ... | 30,000 | 30,000 | 30,000 | 30,000 | 30,000 | 30,000 | |
| 5 Refund ... ... .. | 307 | 42 | 8 | ... | ... | ... | |
| Total ... | 2,06,044 | 1,99,607 | 1,96,550 | 1,90,000 | 2,18,000 | 1,97,300 | |
| Opening Balance ... ... | 72,822 | 68,623 | 56,755 | 97,494 | 97,494 | 72,094 | |
| GRAND TOTAL ... | 2,78,866 | 2,68,230 | 2,53,305 | 2,87,494 | 3,15,191 | 2,69,394 | |

EXPENDITURE.

| A LAW COLLEGE. | | | | | | | |
|---|---|---|---|---|---|---|---|
| 1 Principal, Vice-Principal and Professors 1 (1,000), 1 (500), 6 (250), 37 (175), 6 (160), 2 (200), 1 (1,000) .. | 1,69,089 | 1,67,114 | 1,22,024 | 1,44,000 | 1,34,000 | 1,54,600 | |
| 2 Assistants 3 (150) 1 (85-90), 1 (65-70), 5 (60), 5 (52 56), Menials 1 (19), 4 (18), 11 (17) ... | 14,808 | 16,829 | 17,345 | 18,000 | 18,400 | 17,436 | |
| 3 Mess establishment 1 (100), 5 (30), 1 (150) ... .. ... | 3,885 | 3,660 | 3,790 | 3,800 | 3,030 | 4,800 | |
| 4. Books and Periodicals ... .. | 10,233 | 11,947 | 4,729 | 6,500 | 6,500 | 6,500 | |
| 5 Book binding ... ... | 754 | 693 | 459 | 1,500 | 1,500 | 1,500 | |
| 6 Scholarships . .. | 2,010 | 2,082 | 1,866 | 2,000 | 3,000 | 2,000 | |
| 7 Furniture .. ... .. | 1,194 | 1,194 | 41 | 500 | 500 | 500 | |
| 8 Refund of Fees . .. | 71 | 37 | 120 | 100 | 20 | ... | |
| 9 Stationery and Contingencies ... | 334 | 1,291 | 306 | 500 | 500 | 600 | |
| 10 Proportion of Electric Expenses | 6,024 | 3,450 | 3,276 | 3,500 | 3,000 | 3,500 | |
| 11 ,, ,, Municipal Taxes ... | ... | ... | ... | 2,200 | 24,200 | 2,200 | |
| 12 Drill Instructors ... ... | ... | ... | ... | 1,200 | ... | ... | |
| 13 Contribution to the University Corps | ... | ... | ... | 1,000 | 1,000 | ... | |
| 14. ,, ,, College Athletic Fund ... | ... | . | 1,350 | 1,500 | 1,500 | 1,500 | |
| 15 ,, for Principal's quarters . | ... | .. | | . | . | .. | |
| 16 Printing Syllabuses ... ... | 936 | 1,403 | 235 | 500 | 500 | 500 | |
| 17 Foundation Day Celebration .. | . | 825 | 270 | 750 | 750 | .. | |
| 18 House rent at Rs 500 per month ... | ... | ... | ... | 6,000 | 45,000 | 6,000 | |
| 19 Medical Inspection of students ... | ... | ... | .. | 1,200 | ... | .. | |
| 20 Miscellaneous ... .. | 905 | 950 | ... | . | .. | ... | |
| Total ... | 2,10,243 | 2,11,475 | 1,55,811 | 1,94,750 | 2,43,400 | 2,01,636 | |
| Closing Balance ... .. | 68,623 | 56,755 | 97,494 | 92,744 | 72,094 | 67,758 | |
| GRAND TOTAL ... | 2,78,866 | 2,68,230 | 2,53,305 | 2,87,494 | 3,15,494 | 2,69,394 | |

### B. Hardinge Hostel.

INCOME

| | | | | | | |
|---|---|---|---|---|---|---|
| 1. Hostel fees and fines ... ... | | | | | | |
| 2. Admission fees ... ... | 38,623 | 40,888 | 39,657 | 40,000 | 44,000 | 46,068 |
| 3. Forfeiture of caution money ... | | | | | | |
| 4 Sale proceeds of old utensils ... | ... | ... | ... | ... | ... | ... |
| Total ... | 38,623 | 40,888 | 39,657 | 40,000 | 44,000 | 46,068 |
| Opening Balance ... ... | 22,574 | 24,410 | 26,838 | 29,834 | 29,834 | 26,634 |
| GRAND TOTAL ... | 61,197 | 65,298 | 66,495 | 69,834 | 73,834 | 72,702 |

## IV. University Law College and Hardinge Hostel—*contd*

### Hardinge Hostel—*contd*

EXPENDITURE.

| | Actuals, 1919-20 | Actuals, 1920 21 | Actuals, 1921-22 | Budget Estimates, 1922-23 | Budget Estimates, 1922-23 | Budget Estimates, 1923 24 | Remarks. |
|---|---|---|---|---|---|---|---|
| | Rs | Rs. | Rs | Rs | Rs. | Rs | |
| Officers ... ... ... ... / Cooks and Servants ... ... ... / Durwans, Bearers, Sweepers and Bhisti ... | 6,928 | 7,242 | 7,640 | 7,800 | 8,500 | 9,930 | |
| Messing of Boarders ... ... ... / " Officers ... ... ... / " Cooks and Servants ... ... | 19,040 | 21,047 | 19,855 | 21,500 | 24,000 | 25,223 | |
| Repair of Building ... ... ... | 2,227 | 1,489 | 1,540 | 2,000 | 600 | 6,000 | |
| Insurance ... .. ... | 125 | 125 | 125 | 125 | 125 | 125 | |
| New Furniture ... ... ... / " Utensils, etc ... .. .. | 732 | 1,422 | ... | 5,000 | 5,500 | 1,500 | |
| Repair of Furniture and petty repairs . | ... | ... | 41 | 100 | ... | 600 | |
| Contingencies ... ... .. | 92 | 41 | 13 | 75 | 75 | 600 | |
| Electric Light expenses ... ... / " Installations, repairs and purchase of bulbs / " Motor and Pump ... ... | 3,524 | 2,967 | 3,300 | 3,500 | 3 500 | 7,000 | |
| Municipal taxes ... ... ... | 4,119 | 4,119 | 4,119 | 4,200 | 4,400 | 4,119 | |
| Refund ... ... ... ... | ... | 8 | 28 | ... | 500 | ... | |
| Total ... | 36,787 | 38,460 | 36,661 | 44,300 | 47,200 | 55,097 | |
| Closing Balance ... ... ... | 24,410 | 26,838 | 29,834 | 25,534 | 26,634 | 17,605 | |
| GRAND TOTAL ... | 61,197 | 65,298 | 66,495 | 69,834 | 73,834 | 72,702 | |

## V. Special Funds.

### (1) *Sir Rashbehary Ghose Fund*

FIRST GIFT.

4 Per cent Calcutta Municipal and Port Trust Debentures ... Rs 10,00,000

INCOME

| | | | | | | |
|---|---|---|---|---|---|---|
| Interest ... ... ... | 40,000 | 40,000 | 40,000 | 40,000 | 40,000 | 40,000 |
| Contribution from Fee Fund for H A of Professors. | ... | 2,700 | 3,426 | 2,400 | 2,400 | 3,600 |
| Miscellaneous ... ... ... | ... | 72 | 234 | ... | ... | ... |
| Opening Balance ... ... ... | 4,118 | 5,515 | 6,659 | 7,460 | 7,460 | 7,450 |
| GRAND TOTAL ... | 44,118 | 48,287 | 50,319 | 49,860 | 49,860 | 51,050 |

## V. Special Funds—*contd*

### (1) *Sir Rashbehary Ghose Fund*—concld.

EXPENDITURE

| | Actuals, 1919-20 | Actuals, 1920-21 | Actuals, 1921-22 | Budget Estimates, 1922-23 | Revised Estimates, 1922-23 | Budget Estimates, 1923-24 | Remarks |
|---|---|---|---|---|---|---|---|
| | Rs | Rs | Rs | Rs | Rs | Rs | |
| Salary of Professor of Mathematics (500) | 6,000 | 6,000 | 5,134 | 4,500 | 4,500 | 6,000 | |
| " " Physics (500) | 6,000 | 6,000 | 6,000 | 6,000 | 6,000 | 6,000 | |
| " " Chemistry (500) | 6,000 | 6,000 | 6,000 | 6,000 | 6,000 | 6,000 | |
| " " Botany (500) | 6,000 | 6,000 | 6,000 | 6,000 | 6,000 | 6,000 | |
| House allowance of three Professors .. | ... | 2,700 | 3,426 | 2,400 | 2,400 | 3,600 | |
| Scholarships 8 (75) .. ... | 4,836 | 4,350 | 6,558 | 7,200 | 7,200 | 7,200 | |
| Bank Commission and Stamped Cheques | 107 | 113 | 112 | 110 | 110 | 150 | |
| Travelling Expenses ... | 1,160 | 1,215 | 446 | .. | .. | .. | |
| Contribution to the Science College .. | 8,500 | 8,500 | 8,000 | . | .. | 6,500 | |
| Research grant for the Physics Professor | .. | | .. | 3,400 | 3,400 | 1,500 | |
| " " Chemistry " | ... | 750 | .. | 3,400 | 3,400 | 1,500 | |
| " " Botany " | . | | 1,183 | 3,400 | 3,400 | 1,500 | |
| Total . | 38,603 | 41,628 | 42,859 | 42,410 | 42,410 | 45,950 | |
| Closing Balance ... ... .. | 5,515 | 6,659 | 7,460 | 7,450 | 7,450 | 5,100 | |
| GRAND TOTAL . | 44,118 | 48,287 | 50,319 | 49,860 | 49,860 | 51,050 | |

SECOND GIFT

3½ Per cent G P Notes Rs 11,43,000

INCOME

| | | | | | | | |
|---|---|---|---|---|---|---|---|
| Interest ... ... | 10,467 | 40,005 | 76,304 | 40,005 | 40,005 | 40,005 | |
| Market value of 3½ per cent G P Notes for Rs 10,50,000 withdrawn from Bank | . | . | 6,24,750 | | ... | .. | |
| Contribution from Fee Fund .. | .. | 1,500 | 2,400 | 2,400 | 2,400 | 2,400 | |
| Miscellaneous .. .. | . | 64 | 271 | ... | | .. | |
| Opening Balance ... .. | . | 10,387 | 7,586 | 25,637 | 25,637 | 2,792 | |
| GRAND TOTAL .. | 10,467 | 51,956 | 7,11,311 | 68,042 | 68,042 | 45,197 | |

EXPENDITURE

| | | | | | | | |
|---|---|---|---|---|---|---|---|
| Salary of Professor of Applied Chemistry (500) ... ... ... | .. | 4,758 | 6,000 | 6,000 | 6,000 | 6,000 | |
| Salary of Professor of Applied Physics (500) ... .. .. | . | 3,000 | 6,000 | 6,000 | 6,000 | 6,000 | |
| House allowance of Professors . | .. | 1,500 | 2,400 | 2,400 | 2,400 | 2,400 | |
| Demonstrator in Applied Chemistry (200) | ... | 1,200 | 2,053 | 2,400 | 2,400 | 2,400 | |
| Draughtsman (150) ... ... | ... | 285 | 1,650 | 1,800 | 1,800 | 1,800 | |
| Mechanic for the Workshop (90) .. | ... | .. | ... | .. | ... | 1,080 | |
| Laboratory Boy (20) for the Physics Department ... ... .. | ... | . | ... | ... | ... | 240 | |
| Laboratory Peons 3(16) for the Chemistry Department ... ... ... | ... | | . | ... | ... | 576 | |
| Scholarship 4(75) .. ... | ... | 525 | 1,200 | 3,600 | 1,500 | 3,600 | |
| Applied Chemistry Department ... | ... | 30,000 | 12,090 | 10,000 | 10,000 | 5,000 | |
| Applied Physics Department ... | .. | ... | 1,530 | 10,000 | 10,000 | 5,000 | |
| Workshop ... ... ... | ... | ... | 25,000 | 25,000 | 25,000 | 3,900 | |
| Travelling Expenses ... ... | ... | 3,000 | 58 | ... | ... | ... | |
| Investment on Mortgage ... ... | ... | ... | 6,25,000 | ... | ... | ... | |
| Bank Commission ... | 80 | 102 | 2,693 | 150 | 150 | 109 | |
| Total ... | 80 | 44,370 | 6,85,674 | 67,350 | 65,250 | 38,105 | |
| Closing Balance ... ... ... | 10,387 | 7,586 | 25,637 | 692 | 2,792 | 7,092 | |
| GRAND TOTAL ... | 10,467 | 51,956 | 7,11,311 | 68,042 | 68,042 | 45,197 | |

## V. Special Funds—*contd.*

### (2) *Sir Tarak Nath Palit's Fund (First Trust)*

| | Rs. |
|---|---|
| (1) 3½ per cent G. P Notes (Interest Rs. 5,005) ... . . ... | 1,43,000 |
| (2) 4 per cent. C M D. (Interest Rs. 6,800) ... ... ... ... | 1,70,000 |
| (3) 5 per cent War Loan (Interest Rs. 2,480) .. ... .. .. | 49,600 |
| (4) 4½ per cent (S N T) Mortgage (Interest Rs 4,800) ... ... ... | 1,00,000 |
| (5) 250 Delhi-Saharanpur Light Ry Co 's Shares (Dividend Rs 1,750) ... ... | 25,000 |
| (6) 145 Barasat-Basirhat " " " (Dividend " 580) ... ... | 14,500 |
| (7) 125 Clive Mills Co 's A Preference Shares (Dividend " 875) ... ... | 12,500 |
| Total ... | 5,14,600 |

INCOME

| | Actuals, 1919-20 | Actuals, 1920-21 | Actuals, 1921-22 | Budget Estimates, 1922-23 | Revised Estimates, 1922 23. | Budget Estimates, 1923-24. | Remarks. |
|---|---|---|---|---|---|---|---|
| | Rs | Rs | Rs | Rs | Rs | Rs | |
| Interest and Dividends .. . | 22,036 | 23,235 | 17,562 | 27,490 | 27,490 | 22,290 | |
| Contribution from Second Trust for H A of Professor of Physics | ... | ... | ... | 1,500 | 1,500 | 1,500 | |
| Contribution from 2nd Trust to meet the deficit. | .. | .. | .. | ... | .. | 3,910 | |
| Total ... | 22,036 | 23,235 | 17,562 | 28,990 | 28,990 | 27,700 | |
| Opening Balance .. ... ... | 23,240 | 16,667 | 6,717 | – 5,083 | – 5,083 | – 1,658 | |
| GRAND TOTAL . | 45,276 | 39,902 | 24,279 | 23,907 | 23,907 | 26,042 | |

EXPENDITURE

| | | | | | | | |
|---|---|---|---|---|---|---|---|
| Salary of Professor of Chemistry (800--50--1,000) | 10,592 | 11,748 | 12,000 | 12,000 | 12,000 | 12,000* | |
| Salary of Professor of Physics (800--50--1,000) | 10,748 | 11,347 | 11,948 | 12,000 | 12,000 | 12,000 | |
| House allowance of Professor of Physics (125) | 1,500 | 1,500 | 1,500 | 1,500 | 1,500 | 1,500 | |
| Scholarship 3 (100) . . ... | 5,725 | 6,050 | 3,850 | ... | ... | ... | |
| Bank Commission and Stamped Cheques ... | 45 | 40 | 64 | 65 | 65 | ... | |
| Travelling Expenses ... ... .. | ... | 2,500 | ... | ... | ... | ... | |
| Total .. | 28,610 | 33,185 | 29,362 | 25,565 | 25,565 | 25,500 | |
| Closing Balance ... ... . | 16,666 | 6,717 | – 5,083 | – 1,658 | – 1,658 | 542 | |
| GRAND TOTAL ... | 45,276 | 39,902 | 24,279 | 23,907 | 23,907 | 26,042 | |

* Gift to the Science College (It is proposed to keep the amount in Fixed Deposit with the Imperial Bank of India for the present)

### (3) *Sir Tarak Nath Palit's Fund (Second Trust).*

| | Rs. |
|---|---|
| (1) 3½ per cent G P Notes (Interest Rs 7,689) ... ... ... ... | 2,19,700 |
| (2) 4 per cent C M D (Interest Rs 2,600) ... ... ... ... ... | 65,000 |
| (3) 5½ per cent War Bonds, 1928 (Interest Rs 3,575) ... ... ... ... | 65,000 |
| (4) 33 Imperial Bank of India Shares (Dividend Rs. 2,640) ... ... ... | 16,500 |
| (5) 6 per cent (N N D & B N D) Mortgage ... ... ... ... | 3,000 |
| (6) 6 per cent (H K. S) Mortgage ... .. ... ... ... | 1,250 |
| (7) Land and House property (Rent Rs 1,965) ... ... ... ... | 70,481 |
| Total | 4,40,931 |

INCOME

| | | | | | | |
|---|---|---|---|---|---|---|
| Interests, Dividends and House-rents ... | 36,344 | 20,324 | 19,075 | 18,470 | 18,400 | 18,450 |
| Repayment of Loan ... | 23,000 | ... | 500 | 600 | 200 | ... |
| Sale-proceeds of Property ... ... | 1,349 | 7,597 | ... | ... | ... | ... |
| Contribution from Fee Fund for House allowance of Professors Brühl and Agharkar. | ... | 1,000 | 2,400 | 2,400 | 2,400 | 2,400 |
| Refund and Miscellaneous ... ... | . | ... | 150 | ... | ... | ... |
| Total ... | 60 693 | 28,921 | 22,125 | 21,470 | 21,000 | 20,850 |
| Opening Balance ... ... ... | 9,374 | 20,558 | 13,975 | 10,501 | 10,500 | 6,820 |
| GRAND TOTAL ... | 70,067 | 49,479 | 36,100 | 31,971 | 31,500 | 27,670 |

## V. Special Funds—*contd.*

### (3) *Sir Tarak Nath Palit's Fund (Second Trust)*—concld

EXPENDITURE.

| | Actuals, 1919-20 | Actuals, 1920 21 | Actuals, 1921-22 | Budget Estimates, 1922-23 | Revised Estimates, 1922-23 | Budget Estimates, 1923-24 | Remarks. |
|---|---|---|---|---|---|---|---|
| | Rs. | Rs. | Rs | Rs | Rs | Rs | |
| Investment ... ... ... | 24,084 | 2,750 | 10,050 | ... | ... | ... | |
| Rents and Taxes, etc. ... ... | 1,968 | 2,136 | 2,464 | 2,500 | 2,700 | 2 500 | |
| Bank Commission and Stamped Cheques | 38 | 54 | 32 | 35 | 50 | 110 | |
| Miss Rani Palit (Annuity) ... .. | 105 | 255 | 180 | 180 | 180 | 180 | |
| Repair of House Property ... ... | 234 | 4,820 | 25 | 1,000 | 3 000 | 250 | |
| Insurance of Buildings ... ... | ... | ... | ... | 250 | 250 | 250 | |
| Salary of Asst. Profs, Assts and others* ... | 10 100 | 9,900 | 12,848 | 12,300 | 12,300 | 14,400 | |
| Contribution for Laboratory ... ... | 10,000 | 15,000 | ... | ... | ... | ... | |
| " to First Trust for H A of Prof of Physics | ... | ... | ... | 1,500 | 1,500 | 1,500 | |
| " to First Trust to meet deficit .. | ... | ... | ... | ... | ... | 3,910 | |
| Research Grants ... ... ... | 2,980 | 589 | ... | ... | ... | ... | |
| Research Scholars 2 (100), 2 (75), 1 (50) .. | ... | ... | ... | 4,200 | 4,700 | 4,800 | |
| Total .. | 49,509 | 35,504 | 25,599 | 21,965 | 24,680 | 27,900 | |
| Closing Balance ... ... ... | 20,558 | 13,975 | 10,501 | 10,006 | 6,820 | —230 | |
| GRAND TOTAL ... | 70,067 | 49,479 | 36,100 | 31,971 | 31,500 | 27,670 | |

### (4) *Sir Tarak Nath Palit Foreign Scholarship Fund*

| | Rs |
|---|---|
| (1) 5½ per cent. War Bonds, 1928 (Interest Rs. 275) ... ... ... ... | 5 000 |
| (2) 6 per cent U P Bonds (Interest Rs 5,478) ... ... ... ... | 91,300 |
| (3) 6 per cent U P Bonds (Interest Rs 600) .. .. ... ... | 10,000 |
| Total ... | 1,06,300 |

INCOME

| | | | | | | |
|---|---|---|---|---|---|---|
| Interest ... ... ... ... | 9,320 | 846 | 14,249 | 6,353 | 6,353 | 6,350 |
| Sale-proceeds of 5½ p c War Bonds, 1928, for Rs. 10,000. | ... | ... | ... | 9,500 | 10,290 | ... |
| Repayment (A) Loan ... ... | ... | ... | 85,000 | ... | ... | ... |
| (B) Scholarship ... ... | .. | ... | 9,424 | ... | ... | ... |
| Total ... | 9,320 | 846 | 1,08,673 | 15,853 | 16,643 | 6,350 |
| Opening Balance ... ... ... | 23,525 | 15,364 | —1,916 | 1,260 | 1,260 | 11,773 |
| GRAND TOTAL ... | 32,845 | 16,210 | 1,06,757 | 17,113 | 17,903 | 18,123 |

EXPENDITURE

| | | | | | | |
|---|---|---|---|---|---|---|
| Scholarship ... ... ... | 17,480 | 18,126 | 11,288 | 5,200 | 6,130 | 5,800 |
| Bank Commission ... ... ... | ... | ... | ... | ... | ... | 100 |
| Investment ... ... ... | ... | ... | 94,209 | ... | ... | ... |
| Total ... | 17,480 | 18,126 | 1,05,497 | 5,200 | 6,130 | 5,900 |
| Closing Balance ... ... ... | 15,365 | —1,916 | 1,260 | 11,913 | 11,773 | 12,223 |
| GRAND TOTAL ... | 32,845 | 16,210 | 1,06,757 | 17,113 | 17,903 | 18,123 |

| | Rs. |
|---|---|
| * Asst. Professors of Chemistry 2 (250—25—300) ... .. | 6,900 |
| " " " Physics (250—25—300) . . | 3,300 |
| Demonstrator in Chemistry (150) ... | 1,800 |
| Research Assistant in Chemistry (75—10—125) | 900 |
| Laboratory Assistant in Physics (75) . .. | 900 |
| Electrician (Physics Department) (50) ... | 600 |
| Total . | 14,400 |

## V.—Special Funds—*contd.*

### (5) *Khaira Fund.*

| | Rs |
|---|---|
| 6 per cent Bonds ... ... ... ... ... ... | 3,90,000 |
| 5½ per cent War Bonds ... ... ... ... ... ... | 10,000 |
| 6 per cent. U. P. Bonds ... ... ... ... ... ... | 62,000 |
| Mortgage (6 per cent) ... ... ... ... .. ... | 90,000 |
| Total ... | 5,52,000 |

INCOME

| | Actuals, 1919-20 | Actuals, 1920-21. | Actuals, 1921-22 | Budget Estimates, 1922-23. | Revised Estimates, 1922-23 | Budget Estimates, 1923-24. | Remarks |
|---|---|---|---|---|---|---|---|
| | Rs | Rs | Rs | Rs | Rs | Rs. | |
| Sale proceeds of 5½ per cent War Bonds ... | ... | ... | 60,170 | ... | ... | ... | |
| Interest ... ... ... ... | .. | ... | 23,643 | 36,550 | 36,875 | 33,070 | |
| Contribution from Fee Fund for House allowances of Professors | ... | ... | ... | ... | ... | 6,000 | |
| Miscellaneous ... ... ... | ... | ... | 125 | ... | ... | ... | |
| Total ... | ... | ... | 83,938 | 36,550 | 36,875 | 39,070 | |
| Opening Balance ... ... ... | ... | ... | ... | 5,386 | 5,385 | 7,700 | |
| GRAND TOTAL ... | .. | ... | 83,938 | 41,936 | 42,260 | 46,770 | |

EXPENDITURE

| | | | | | | | |
|---|---|---|---|---|---|---|---|
| Paid to Receiver of the High Court .. | ... | ... | 2,950 | ... | ... | ... | |
| Salary of Professor of Fine Arts ... | ... | ... | 4,000 | 6,000 | 6,000 | 6,000 | |
| " " " " Chemistry ... | .. | ... | 4,400 | 6,000 | 6,000 | 6,000 | |
| " " " " Physics ... ... | ... | ... | 3,400 | 6,000 | 6,000 | 6,000 | |
| " " " " Agriculture ... | ... | .. | 3,000 | 6,000 | 6,000 | 6,000 | |
| " " " " Indian Linguistics and Phonetics | ... | ... | ... | 4,000 | 4,035 | 6,900 | |
| House allowances of Professors ... | ... | ... | ... | ... | ... | 6,000 | |
| Investment ... ... ... | ... | .. | 60,000 | ... | ... | ... | |
| Scholarship 2 (75) ... ... ... | ... | ... | 525 | 3,600 | 1,875 | 1,800 | |
| Bank Commission ... ... .. | ... | ... | 277 | 300 | 150 | 200 | |
| Research grants .. ... . | ... | .. | ... | 4,500 | 4 500 | 1,500* | |
| Total ... | .. | ... | 78,552 | 36,400 | 34,560 | 39,500 | |
| Closing Balance ... ... ... | ... | ... | 5,386 | 5,536 | 7,700 | 7,270 | |
| GRAND TOTAL ... | ... | ... | 83,938 | 41,936 | 42,260 | 46,770 | |

### (6) *Inspection and General Administration Fund.*

INCOME

| | | | | | | | |
|---|---|---|---|---|---|---|---|
| Government grant ... ... .. | 25,000 | 25,000 | 50,000 | ... | ... | 25,000 | |
| Opening Balance ... ... ... | 21,173 | 18,088 | 8,420 | 25,460 | 25,460 | 1,600 | |
| GRAND TOTAL ... | 46,173 | 43,088 | 58,420 | 25,460 | 25,460 | 26,600 | |

EXPENDITURE.

| | | | | | | | |
|---|---|---|---|---|---|---|---|
| 1. Inspector of Colleges (800—50—1,000) ... | 12,534 | 12,016 | 9,350 | 11,750 | 11,750 | 11,450 | |
| 2 Assistant 1 (150—10—200) ... | | | 2,090 | 2,210 | 2,210 | 2,330 | |
| 3 Peons 2 (17) ... ... ... | | | 396 | 450 | 450 | 410 | |
| 4. Travelling expenses of Inspector and Joint Inspectors ... ... ... | 5,408 | 6,176 | 8,406 | 8,500 | 8,500 | 6,500 | |
| 5. Travelling Expenses of Vice Chancellor ... | ... | ... | ... | 1,000 | ... | ... | |
| 6. Travelling allowance to Examiners in practical subjects | 1,039 | 1,256 | 665 | 850 | 850 | 850 | |
| 7. Contingencies ... ... ... | 104 | 220 | 53 | 100 | 100 | 100 | |
| 8 Contribution to Fee Fund ... ... | 9,000 | 15,000 | 12 000 | ... | ... | 2,500 | |
| Total ... | 28,085 | 34,668 | 32,960 | 24,860 | 23,860 | 24,140 | |
| Closing Balance ... ... ... | 18,088 | 8,420 | 25,460 | 600 | 1,600 | 2,460 | |
| GRAND TOTAL ... | 46,173 | 43,088 | 58,420 | 25,460 | 25,460 | 26,600 | |

| | Rs. |
|---|---|
| * Professor of Physics ... .. .. ... ... ... | 500 |
| " " Chemistry ... ... .. ... .. | 500 |
| " " Agriculture ... . ... ... ... | 500 |
| | 1,500 |

## V. Special Funds—*contd.*

### (7) *Travelling Allowances Fund.*

INCOME.

| | Actuals, 1919-20. | Actuals, 1920-21 | Actuals, 1921-22 | Budget Estimates, 1922-23 | Revised Estimates, 1922-23 | Budget Estimates, 1923-24 | Remarks. |
|---|---|---|---|---|---|---|---|
| | Rs | Rs. | Rs | Rs | Rs. | Rs | |
| Government grant ... ... | 5,000 | 5,000 | 10,000 | ... | ... | 5,000 | |
| Opening Balance ... ... | —198 | 30 | 2,617 | 8,715 | 8,715 | 2,715 | |
| Total ... | 4,802 | 5,030 | 12,617 | 8,715 | 8,715 | 7,715 | |

EXPENDITURE

| | | | | | | | |
|---|---|---|---|---|---|---|---|
| Travelling expenses of Fellows and University Teachers, etc., for attending meetings | 4,772 | 2,413 | 3,902 | 6,000 | 6,000 | 5,000 | |
| Closing Balance ... ... | 30 | 2,617 | 8,715 | 2,715 | 2,715 | 2,715 | |
| Total ... | 4,802 | 5,030 | 12,617 | 8,715 | 8,715 | 8,715 | |

### (8) *Ramtanu Lahiri Fellowship Fund*

INCOME

| | | | | | | | |
|---|---|---|---|---|---|---|---|
| Sale-proceeds of "Select Poems" .. | 14,194 | 12,386 | 6,270 | 6,300 | 9,500 | 9,500 | |
| " " Investments .. ... | 10,400 | . | 15 000 | . | ... | ... | |
| Opening Balance .. ... | 869 | 18,638 | 8,713 | 6,348 | 6,348 | 4,348 | |
| Total .. | 25,463 | 31,024 | 29,983 | 12,648 | 15,848 | 13,848 | |

EXPENDITURE

| | | | | | | | |
|---|---|---|---|---|---|---|---|
| Salary of Fellow (350) ... ... | 3,580 | 4,200 | 3,850 | 4,550 | 4,550 | 4,200 | |
| Research Assistants 4 (100) ... ... | 2,400 | 2 400 | 4,300 | 5,200 | 4,950 | 4,800 | |
| Investment ... .. . | .. | 14,231 | 15,000 | . . | .. | ... | |
| Two gold medals ... . . . | 200 | 200 | 200 | 200 | 200 | 200 | |
| Paper for and binding "Select Poems" . | 645 | 1,280 | 220 | 1,500 | 1,500 | 1,500 | |
| Contingencies ... ... . | . | . . | 65 | 100 | 300 | 100 | |
| Total ... | 6,825 | 22,311 | 23,635 | 11,550 | 11,500 | 10,800 | |
| Closing Balance ... ... | 18,638 | 8,713 | 6,348 | 1,098 | 4,348 | 3,048 | |
| GRAND TOTAL ... | 25,463 | 31,024 | 29,983 | 12,648 | 15,848 | 13,848 | |

### (9) *Students' Mess Fund*

INCOME.

| | | | | | | | |
|---|---|---|---|---|---|---|---|
| Government grant . ... ... | 14,329 | 17,415 | 13,128 | 13,128 | 13,128 | 13,128 | |
| Seat rents ... ... ... | 62,391 | 67,622 | 52,850 | 53,000 | 44,000 | 45,000 | |
| Total ... | 76,720 | 85,037 | 65,978 | 66,128 | 57,128 | 58,128 | |
| Opening Balance ... ... ... | —4,992 | —7,358 | —5,671 | —10,744 | —10,744 | —16,126 | |
| GRAND TOTAL ... | 71,728 | 77,679 | 60,307 | 55,384 | 46,384 | 42,002 | |

EXPENDITURE

| | | | | | | | |
|---|---|---|---|---|---|---|---|
| Inspector (200—20—300) ... ... | 5,460 | 6,004 | 3,530 | 3,600 | 3,600 | 3,600 | |
| Conveyance allowance of the Inspector (50) ... | | | 600 | 600 | 600 | 600 | |
| Assistants 2 (50—5—80) ... ... | | | 1,490 | 1,610 | 1,610 | 1,750 | |
| Peons 1 (19), 1 (17) ... ... | | | 621 | 450 | 600 | 600 | |
| Contingencies ... ... ... | 309 | 216 | 428 | 400 | 100 | 100 | |
| House-rents ... ... ... | 73 317 | 77,130 | 64,382 | 64,500 | 56,000 | 56,000 | |
| Total ... | 79,086 | 83,350 | 71,051 | 71,160 | 62,510 | 62,650 | |
| Closing Balance ... ... ... | —7,358 | —5,671 | —10,744 | —15,776 | —16,126 | —20,648 | |
| GRAND TOTAL ... | 71,728 | 77,679 | 60,307 | 55,384 | 46,384 | 42,002 | |

## V.—Special Funds—*contd.*

### (10) *Carmichael Professorship Fund*

| | Rs. |
|---|---|
| 3½ per cent G P Notes ... ... ... | 50,000 |
| 4 „ „ Debentures ... ... ... | 30,000 |
| 6 „ Ten-year Bonds ... ... ... | 21,600 |
| Total ... | 1,01,600 |

INCOME.

| | Actuals, 1919-20 | Actuals, 1920-21. | Actuals, 1921-22 | Budget Estimates, 1922-23 | Revised Estimates, 1922-23 | Budget Estimates, 1923-24. | Remarks. |
|---|---|---|---|---|---|---|---|
| | Rs. | Rs | Rs. | Rs | Rs | Rs | |
| Interests on Investments ... .. | 3,825 | 3,612 | 4,246 | 4,246 | 4,246 | 4,246 | |
| Sale-proceeds of „ ... ... | ... | 21 632 | ... | ... | ... | ... | |
| Sale proceeds of Sanskrit Grammar and Selections | 16,731 | 17,353 | 12,384 | 12,500 | 13,200 | 13,000 | |
| Total ... | 20,556 | 42,597 | 16,630 | 16,746 | 17,446 | 17,246 | |
| Opening Balance ... ... ... | 16,305 | 14,054 | 8,127 | 2,532 | 2,532 | 518 | |
| GRAND TOTAL ... | 36,861 | 56,651 | 24,757 | 19,278 | 19,978 | 17,764 | |

EXPENDITURE

| | | | | | | | |
|---|---|---|---|---|---|---|---|
| Salary of Professor (1,250) ... ... | 15,000 | 17,645 | 15,750 | 16,250 | 16,250 | 15,000 | |
| Pension Contribution of the Professor (250) ... | ... | 2,470 | 2,750 | 3,000 | 3,000 | 3,000 | |
| Cost of Paper and binding Sanskrit Selections and Grammar, and proof-reading | 7,797 | 6,800 | 3,714 | ... | 200 | ... | |
| Bank Commission ... ... ... | 10 | 9 | 11 | 10 | 10 | 10 | |
| Investments ... ... ... | ... | 21,600 | ... | ... | ... | ... | |
| Total ... | 22,807 | 48,524 | 22,225 | 19,260 | 19,460 | 18,010 | |
| Closing Balance ... ... ... | 14,054 | 8,127 | 2,532 | 18 | 518 | —246 | |
| GRAND TOTAL . | 36,861 | 56,651 | 24,757 | 19,278 | 19,978 | 17,764 | |

### (11) *Minto Professorship Fund*

INCOME.

| | | | | | | |
|---|---|---|---|---|---|---|
| Government grant ... ... ... | 2,000 | 13,000 | 13,000 | 13,000 | 16,250 | 13,000 |
| Opening Balance ... ... ... | 9,783 | 6,944 | 5,944 | 7,944 | 7,944 | 11,194 |
| Total ... | 11,783 | 19,944 | 18,944 | 20,944 | 24,194 | 24,194 |

EXPENDITURE.

| | | | | | | |
|---|---|---|---|---|---|---|
| Salary of the Professor (1,000) ... ... | 4,839 | 14,000 | 11,000 | 13,000 | 13,000 | 12,000 |
| Closing Balance ... ... ... | 6,944 | 5,944 | 7,944 | 7,944 | 11,194 | 12,194 |
| Total ... | 11,783 | 19,944 | 18,944 | 20,944 | 24,194 | 24,194 |

### (12) *Hardinge Professorship Fund*

INCOME.

| | | | | | | |
|---|---|---|---|---|---|---|
| Government grant ... ... ... | 12,000 | 12,000 | 12,000 | 12,000 | 12,000 | 12,000 |
| Opening Balance ... ... ... | 12,349 | 8,149 | 3,949 | 1,099 | 1,098 | 2,734 |
| Total ... | 24,349 | 20,149 | 15,949 | 13,099 | 13,098 | 14,734 |

EXPENDITURE

| | | | | | | |
|---|---|---|---|---|---|---|
| Salary and Allowance of Professor (1,350) ... | 16,200 | 16,200 | 14,850 | 10,800 | 10,364 | 12,000 |
| Closing Balance ... ... ... | 8,149 | 3,949 | 1,099 | 2,299 | 2,734 | 2,734 |
| Total ... | 24,349 | 20,149 | 15,949 | 13,099 | 13,098 | 14,734 |

## V. Special Funds—*concld*

### (13) *George V Professorship Fund*

INCOME

| | Actuals, 1919-20. | Actuals, 1920-21 | Actuals, 1921-22 | Budget Estimates, 1922-23 | Revised Estimates, 1922-23 | Budget Estimates, 1923-24 | Remarks. |
|---|---|---|---|---|---|---|---|
| | Rs | Rs | Rs | Rs | Rs | Rs | |
| Government grant .. .. | 14,750* | 12,000 | 12,000 | 12,000 | 12,000 | 12,000 | |
| Opening Balance .. ... . | 19,000 | 19,000 | 20,065 | 19,560 | 19,560 | 17,190 | |
| Total ... | 33,750 | 31,000 | 32,065 | 31,560 | 31,560 | 29,190 | |

EXPENDITURE

| | | | | | | | |
|---|---|---|---|---|---|---|---|
| Salary of Professor (1,000) and Pension Contribution (112 8) | 14 750 | 10,935 | 12,505 | 14 200 | 14,370 | 13,350 | |
| Closing Balance . . . .. | 19,000 | 20,065 | 19,560 | 17,360 | 17,190 | 15,840 | |
| Total ... | 33,750 | 31,000 | 32,065 | 31,560 | 31 560 | 29,190 | |

### (14) *Readership Fund*

INCOME

| | | | | | | | |
|---|---|---|---|---|---|---|---|
| Government grant and refund .. ... | 4,000 | 4,000 | 4,017 | 4 000 | 4,000 | 4,000 | |
| Opening Balance ... . ... .. | 11,600 | 10 006 | 11 039 | 11,056 | 11,055 | 13,055 | |
| Total . .. | 15,600 | 14,006 | 15,056 | 15,056 | 15,055 | 17,055 | |

EXPENDITURE

| | | | | | | | |
|---|---|---|---|---|---|---|---|
| Readers' honoraria and travelling expenses ... | 5,594 | 2,967 | 4,000 | 15,000 | 2,000 | 12,000 | |
| Closing Balance ... ... ... | 10,006 | 11,039 | 11,056 | 56 | 13,055 | 5,055 | |
| Total .. | 15,600 | 14,006 | 15,056 | 15,056 | 15,055 | 17,055 | |

*Includes Rs. 2,750 as contribution from the Fee Fund

## V. Special Funds—*contd*

### (15) *Depressed Classes Hostel.*

| INCOME. | Rs. | EXPENDITURE | Rs |
|---|---|---|---|
| Opening Balance ... ... | 160 | Establishment, house-rents and Contingencies | 4,640 |
| Seat-rents and Government Grant | 4,500 | Closing Balance ... ... | 20 |
| Total ... | 4,660 | Total ... | 4,660 |

### (15) *St. Xavier's College Hostel.*

| | | | |
|---|---|---|---|
| Opening Balance ... ... | 1,500 | Establishment, Municipal Taxes, Electric Expenses and Contingencies | 4,500 |
| Seat-rents ... ... | 4,660 | Closing Balance ... ... | 1,660 |
| Total ... | 6,160 | Total ... ... | 6,160 |

### (17) *Ripon Hostel*

| | | | |
|---|---|---|---|
| Opening Balance ... ... | 4,000 | Establishment, Municipal Taxes, Electric Expenses and Contingencies | 9,850 |
| Seat-rents ... ... | 9,300 | Closing Balance ... ... | 3,450 |
| Total ... | 13,300 | Total ... | 13,300 |

### (18) *Rammohan Roy Hostel.*

| | | | |
|---|---|---|---|
| Opening Balance ... ... | 18,000 | Establishment, Municipal Taxes, Electric Expenses and Contingencies. | 11,600 |
| Seat-rents ... ... | 14,200 | Closing Balance .. ... | 20,600 |
| Total ... | 32,200 | Total ... | 32,200 |

### (19) *Vidyasagar Hostel.*

| | | | |
|---|---|---|---|
| Opening Balance ... ... | 13,700 | Establishment, Municipal Taxes, Electric Expenses and Contingencies | 11,800 |
| Seat-rents ... ... | 13,200 | Closing Balance ... ... | 15,100 |
| Total ... | 26,900 | Total ... | 26,900 |

### (20) *Canning Hostel.*

| | | | |
|---|---|---|---|
| Opening Balance ... ... | 17,000 | Establishment, Municipal Taxes, Electric Expenses and Contingencies. | 11,200 |
| Seat-rents ... ... | 13,200 | Closing Balance ... ... | 19,000 |
| Total ... | 30,200 | Total ... | 30,200 |

### (21) *Carmichael Hostel.*

| | | | |
|---|---|---|---|
| Opening Balance ... ... | 7,400 | Establishment, Municipal Taxes, Electric Expenses and Contingencies. | 10,200 |
| Seat-rents ... ... | 11,700 | Closing Balance ... ... | 8,900 |
| Total ... | 19,100 | Total ... | 19,100 |

**V. Special Funds—*contd.***

### (22) *Nawab Abdul Latif and Lafont Science Scholarship Fund.*

3½ per cent G P. Notes for Rs 3,500.

| INCOME. | | Rs | EXPENDITURE | | Rs |
|---|---|---|---|---|---|
| Opening Balance | ... ... | 630 | Scholarship | ... ... | 120 |
| Interest | ... ... | 122 | Closing balance | ... ... | 632 |
| Total | ... | 752 | Total | ... | 752 |

### (23) *Rai Abhoyacharan Mitra Bahadur Fund.*

3½ per cent G P Notes for Rs 1,000
5 " " War Loan " " 100
Total Rs 1,100

| | | | | | |
|---|---|---|---|---|---|
| Opening Balance | ... ... | 104 | Medal | ... ... | 40 |
| Interest | ... ... | 40 | Closing Balance | ... ... | 104 |
| Total | ... | 144 | Total | ... | 144 |

### (24) *Abinashchandra Medal Fund.*

3½ per cent G P Notes for Rs 2,500
5 " " War Loan " " 100
Total Rs 2,600

| | | | | | |
|---|---|---|---|---|---|
| Opening Balance | ... ... | 262 | Medal | .. ... | 92 |
| Interest | ... ... | 92 | Closing Balance | ... ... | 262 |
| Total | ... | 354 | Total | ... | 354 |

### (25) *Adharchandra Mukherjee Commemoration Prize Fund.*

3½ per cent G P Notes for Rs 1,000

| | | | | | |
|---|---|---|---|---|---|
| Opening Balance | ... ... | 105 | Prize | ... ... | 35 |
| Interest | ... ... | 35 | Closing Balance | ... ... | 105 |
| Total | ... | 140 | Total | ... | 140 |

### (26) *Adharchandra Mukherjee Lectureship Fund.*

3½ per cent G P Notes for Rs 9,000

| | | | | | |
|---|---|---|---|---|---|
| Opening Balance | ... ... | 511 | Lecturer's Honorarium | ... | 315 |
| Interest | ... ... | 315 | Closing Balance | ... ... | 511 |
| Total | ... | 826 | Total | ... | 826 |

### (27) *Adharchandra Mukherjee Prize Fund.*

3½ per cent G P Notes for Rs 1,500

| | | | | | |
|---|---|---|---|---|---|
| Opening Balance | ... ... | 62 | Prize | ... ... | 52 |
| Interest | ... ... | 52 | Closing Balance | ... ... | 62 |
| Total | ... | 114 | Total | ... | 114 |

### (28) *Ambikacharan Chaudhuri Medal Fund.*

3½ per cent G P Notes for Rs 1,500

| | | | | | |
|---|---|---|---|---|---|
| Opening Balance | ... .. | 170 | Medal | ... ... | 52 |
| Interest | ... ... | 52 | Closing Balance | ... ... | 170 |
| Total | ... | 222 | Total | ... | 222 |

## V. Special Funds—*contd*

### (29) *Rai Amritanath Mitra Bahadur Prize Fund.*

4 per cent Calcutta Municipal Debentures for Rs 1,500

| INCOME. | | Rs. | EXPENDITURE. | | Rs. |
|---|---|---|---|---|---|
| Opening Balance | ... ... | 368 | Prize | ... ... | 60 |
| Interest | ... ... | 60 | Closing Balance | ... ... | 368 |
| Total | ... | 428 | Total | ... | 428 |

### (30) *Anandaram Barua Medal Fund.*

3½ per cent G P Notes for Rs 1,100

| | | | | | |
|---|---|---|---|---|---|
| Opening Balance | ... ... | 164 | Medal | ... ... | 38 |
| Interest | ... .. | 38 | Closing Balance | ... ... | 164 |
| Total | ... | 202 | Total | ... | 202 |

### (31) *Annapurna Devi Medal Fund.*

5 per cent G P Notes for Rs 2,000

| | | | | | |
|---|---|---|---|---|---|
| Opening Balance | .. ... | 58 | Medal | .. ... | 100 |
| Interest | ... .. | 100 | Closing Balance | ... ... | 58 |
| Total | ... | 158 | Total | ... | 158 |

### (32) *Arunchandra Medal Fund.*

5 per cent War Loan for Rs 500

| | | | | | |
|---|---|---|---|---|---|
| Opening Balance | ... ... | 49 | Medal | ... ... | 25 |
| Interest | ... ... | 25 | Closing Balance | ... ... | 49 |
| Total | ... | 74 | Total | ... | 74 |

### (33) *Sir Asutosh Mookerjee Medal Fund*

3½ per cent G P Notes for Rs 8,000

| | | | | | |
|---|---|---|---|---|---|
| Opening Balance | ... ... | 448 | Medal | ... ... | 315 |
| Interest | ... ... | 300 | Closing Balance | ... ... | 433 |
| Total | ... | 748 | Total | ... | 748 |

### (34) *Sir Asutosh Mookerjee Anthropology Prize Fund.*

3½ per cent G P Notes for Rs 1,100

| | | | | | |
|---|---|---|---|---|---|
| Opening Balance | ... ... | 79 | Prize | ... ... | 38 |
| Interest | ... ... | 38 | Closing Balance | ... ... | 79 |
| Total | ... | 117 | Total | ... | 117 |

### (35) *Sir Asutosh Mookerjee Birth Day Prize Fund.*

3½ per cent G P Notes for Rs 3,000

| | | | | | |
|---|---|---|---|---|---|
| Opening Balance | ... ... | 60 | Prize | ... ... | 105 |
| Interest | ... ... | 105 | Closing Balance | ... ... | 60 |
| Total | ... | 165 | Total | ... | 165 |

V. Special Funds—*contd.*

### (36) *Sir Asutosh Mookerjee Silver Medal Fund.*

3½ per cent G P Notes for Rs 500

| INCOME. | | Rs. | EXPENDITURE. | | Rs. |
|---|---|---|---|---|---|
| Opening Balance | ... ... | 36 | Medal | ... ... | 17 |
| Interest | ... ... | 17 | Closing Balance | ... ... | 36 |
| | Total ... | 53 | | Total ... | 53 |

### (37) *Bankimbehari Sen Medal Fund.*

3½ per cent G P Notes for Rs 2,500

| | | | | | |
|---|---|---|---|---|---|
| Opening Balance | ... ... | 139 | Medal | ... ... | 87 |
| Interest | ... ... | 87 | Closing Balance | ... ... | 139 |
| | Total ... | 226 | | Total ... | 226 |

### (38) *Bankimchandra Medal Fund*

3½ per cent G P Notes for Rs 4,400
5 " " War Loan " " 600
Total Rs 5,000

| | | | | | |
|---|---|---|---|---|---|
| Opening Balance | ... ... | 370 | Medals | ... ... | 100 |
| Interest | ... ... | 184 | Closing Balance | ... ... | 454 |
| | Total ... | 554 | | Total ... | 554 |

### (39) *Banku Behary Banerjee Medal Fund.*

3½ per cent G P Notes for Rs 3,000

| | | | | | |
|---|---|---|---|---|---|
| Opening Balance | ... ... | 113 | Medal | ... ... | 105 |
| Interest | ... ... | 105 | Closing Balance | ... ... | 113 |
| | Total ... | 218 | | Total ... | 218 |

### (40) *Banku Behari Gupta Prize Fund.*

5 per cent G P Notes for Rs, 2,100

| | | | | | |
|---|---|---|---|---|---|
| Opening Balance | ... ... | 298 | Prize | ... ... | 105 |
| Interest | ... ... | 105 | Closing Balance | ... ... | 298 |
| | Total ... | 403 | | Total ... | 403 |

### (41) *Beereshur Mitra Medal Fund.*

3½ per cent. G. P Notes for Rs 5,100

| | | | | | |
|---|---|---|---|---|---|
| Opening Balance | ... ... | 596 | Medal | ... ... | 175 |
| Interest | ... ... | 178 | Closing Balance | ... ... | 599 |
| | Total ... | 774 | | Total ... | 774 |

### (42) *Basantakumari Chaudhurani Prize Fund.*

5 per cent G P. Notes for Rs. 500.

| | | | | | |
|---|---|---|---|---|---|
| Opening Balance | ... ... | 51 | Prize | ... ... | 25 |
| Interest | ... ... | 25 | Closing Balance | ... ... | 51 |
| | Total ... | 76 | | Total ... | 76 |

V. Special Funds—*contd.*

### (43) *Behari Lal Basu Memorial Scholarship Fund.*

3 per cent G P. Notes for Rs. 3,000
3½ " " " " " " 200

Total .. Rs 3,200

| INCOME. | | Rs. | EXPENDITURE. | | Rs. |
|---|---|---|---|---|---|
| Opening Balance | ... ... | 506 | Scholarship | ... ... | 84 |
| Interest | ... ... | 97 | Closing Balance | ... ... | 519 |
| Total | ... | 603 | Total | ... | 603 |

### (44) *Bishnupriya Devi Prize Fund.*

3½ per cent G P Notes for Rs 300
5 " " War Loan " " 100

Total .. Rs 400

| | | | | | |
|---|---|---|---|---|---|
| Opening Balance | ... ... | 76 | Prize | ... ... | 15 |
| Interest | ... ... | 15 | Closing Balance | ... ... | 76 |
| Total | ... | 91 | Total | ... | 91 |

### (45) *Benimadhab Medal Fund.*

3½ per cent G. P Notes for Rs 500

| | | | | | |
|---|---|---|---|---|---|
| Opening Balance | ... ... | 41 | Medal | ... .. | 17 |
| Interest | ... ... | 17 | Closing Balance | ... ... | 41 |
| Total | ... | 58 | Total | ... | 58 |

### (46) *Bipinbihari Sen Memorial Fund.*

3½ per cent. G. P Notes for Rs 600

| | | | | | |
|---|---|---|---|---|---|
| Opening Balance | ... ... | 21 | Prize | ... ... | 21 |
| Interest | ... ... | 21 | Closing Balance | ... ... | 21 |
| Total | ... | 42 | Total | ... | 42 |

### (47) *Sir Bipinkrishna Bose Scholarship Fund.*

6 per cent Ten-year Bonds 1932 for Rs 8,000

| | | | | | |
|---|---|---|---|---|---|
| Opening Balance | ... ... | 239 | Amount to be transferred to Fee Fund to meet deficit | ... | 709 |
| Interest | ... ... | 480 | Closing Balance | ... ... | 10 |
| Total | ... | 719 | Total | ... | 719 |

### (48) *Birla Hindi Lectureship Fund.*

3½ per cent G P Notes for Rs. 22,500

| | | | | | |
|---|---|---|---|---|---|
| Opening Balance | ... ... | 3,130 | Lecturer's Honorarium | ... | 1,200 |
| Interest | ... ... | 787 | Closing Balance | ... ... | 2,717 |
| Total | ... | 3,917 | Total | ... | 3,917 |

### (49) *Brahmamayi Medal Fund.*

3½ per cent. G P. Notes for Rs. 2,500.

| | | | | | |
|---|---|---|---|---|---|
| Opening Balance | ... ... | 262 | Medal | ... ... | 87 |
| Interest | ... ... | 87 | Closing Balance | ... ... | 262 |
| Total | ... | 349 | Total | ... | 349 |

V. Special Funds—*contd*

### (50) *Brahma Mohan Mallik Gold Fund.*

3½ per cent. G. P Notes for Rs 2,500

| INCOME. | Rs. | EXPENDITURE. | Rs. |
|---|---|---|---|
| Opening Balance ... ... | 136 | Medal ... ... | 87 |
| Interest ... ... | 7 | Closing Balance ... ... | 136 |
| Total ... | 223 | Total ... | 223 |

### (51) *Chandmoni Debi and Prandhan Kali Medal Fund.*

3½ per cent G P Notes for Rs 2,000

| | | | |
|---|---|---|---|
| Opening Balance ... ... | 172 | Medal ... ... | 70 |
| Interest ... ... | 70 | Closing Balance ... ... | 172 |
| Total ... | 242 | Total ... | 242 |

### (52) *Clint Memorial Prize Fund.*

3 per cent G P Notes for Rs 100
3½ " " " " " " 300
Total Rs 400

| | | | |
|---|---|---|---|
| Opening Balance ... ... | 34 | Prize ... ... | 13 |
| Interest ... ... | 13 | Closing Balance ... ... | 34 |
| Total ... | 47 | Total ... | 47 |

### (53) *Coates Memorial Fund.*

3½ per cent G P Notes for Rs 2,500
5 " " War Loan " " 800
Total ... Rs 3,300

| | | | |
|---|---|---|---|
| Opening Balance ... ... | 1,012 | Prize ... ... | 127 |
| Interest ... ... | 127 | Closing Balance ... .. | 1,012 |
| Total ... | 1,139 | Total ... | 1,139 |

### (54) *Rai Debendranath Ray Bahadur Memorial Fund.*

3½ per cent G P. Notes for Rs 1,500

| | | | |
|---|---|---|---|
| Opening Balance ... ... | 95 | Medal ... ... | 52 |
| Interest ... ... | 52 | Closing Balance ... ... | 95 |
| Total ... | 147 | Total ... | 147 |

### (55) *Duff Memorial Fund.*

3½ per cent G P Notes for Rs 28,700.

| | | | |
|---|---|---|---|
| Opening Balance ... ... | 2,120 | Scholarships ... ... | 1,008 |
| Interest ... ... | 1,004 | Closing Balance ... ... | 2,116 |
| Total ... | 3,124 | Total ... | 3,124 |

### (56) *Duke Memorial Fund.*

3½ per cent G. P. Notes for Rs 4,000

| | | | |
|---|---|---|---|
| Opening Balance ... ... | 2,341 | Scholarships ... ... | 120 |
| Interest ... ... | 140 | Closing Balance ... ... | 2,361 |
| Total ... | 2,481 | Total ... | 2,481 |

V. [illegible]—*contd.*

### (57) *Dwarkanath Memorial Fund.*

3½ per cent G. P Notes for Rs. 5,500

| INCOME. | Rs. | EXPENDITURE. | Rs. |
|---|---|---|---|
| Opening Balance ... ... | 332 | Scholarship ... ... | 192 |
| Interest ... ... | 196 | Closing Balance ... ... | 336 |
| Total ... | 528 | Total ... | 528 |

### (58) *Durgamani Devi Gold Medal Fund.*

3½ per cent. G P Notes for Rs 1,500

| | | | |
|---|---|---|---|
| Opening Balance ... ... | 111 | Medal ... .. | 52 |
| Interest ... ... | 52 | Closing Balance ... ... | 111 |
| Total ... | 163 | Total ... | 163 |

### (59) *Dwijendralal Roy Memorial Fund.*

3½ per cent. G P. Notes for Rs 7,500

| | | | |
|---|---|---|---|
| Opening Balance ... ... | 454 | Scholarship and Prize ... | 260 |
| Interest ... ... | 262 | Closing Balance ... ... | 456 |
| Total ... | 716 | Total ... | 716 |

### (60) *Eshan Scholarship Fund.*

3½ per cent G P Notes for Rs 17,000
5 „ „ War Loan „ „ 1,000
Total ... Rs. 18,000

| | | | |
|---|---|---|---|
| Opening Balance ... ... | 2,380 | Scholarship ... ... | 480 |
| Interest ... ... | 630 | Closing Balance ... ... | 2,530 |
| Total ... | 3,010 | Total ... | 3,010 |

### (61) *Stephen Finney Medal Fund.*

3½ per cent G. P Notes for Rs 600.

| | | | |
|---|---|---|---|
| Opening Balance ... ... | 119 | Medal ... ... | 21 |
| Interest ... ... | 21 | Closing Balance ... ... | 119 |
| Total ... | 140 | Total ... | 140 |

### (62) *Gangamoni Devi Medal Fund.*

3½ per cent. G. P. Notes for Rs 500.

| | | | |
|---|---|---|---|
| Opening Balance ... ... | 60 | Medal ... ... | 15 |
| Interest ... ... | 15 | Closing Balance ... ... | 60 |
| Total ... | 75 | Total ... | 75 |

### (63) *Gangaprasad Medal Fund.*

3½ per cent. G. P. Notes for Rs. 2,700
5 „ „ War Loan „ „ 700
Total ... Rs. 3,400

| | | | |
|---|---|---|---|
| Opening Balance ... ... | 504 | Medal ... ... | [illegible] |
| Interest ... ... | 129 | Closing Balance ... ... | [illegible] |
| Total ... | 633 | Total ... | 633 |

## V. Special Funds—*contd.*

### (64) *George V Coronation Medal Fund.*

3½ per cent G P Notes for Rs 1,000

| INCOME. | Rs. | EXPENDITURE. | Rs. |
|---|---|---|---|
| Opening Balance ... ... | 144 | Medal ... ... | 35 |
| Interest ... ... | 35 | Closing Balance ... ... | 144 |
| Total ... | 179 | Total ... | 179 |

### (65) *Goluckchunder Ghose Memorial Fund.*

3 per cent G P Notes for Rs 2,500
5 " " War Loan " " 200
Total Rs 2,700

| | | | |
|---|---|---|---|
| Opening Balance ... ... | 256 | Medal ... ... | 85 |
| Interest ... ... | 85 | Closing Balance ... ... | 256 |
| Total ... | 341 | Total ... | 341 |

### (66) *Goodeve Memorial Fund.*

3½ per cent G P Notes for Rs 500

| | | | |
|---|---|---|---|
| Opening Balance .. ... | 136 | Medal ... ... | 17 |
| Interest ... ... | 17 | Closing Balance ... ... | 136 |
| Total ... | 153 | Total ... | 153 |

### (67) *Sir Gooroo Dass Banerjee Prize Fund*

3½ per cent G P Notes for Rs. 1,000

| | | | |
|---|---|---|---|
| Opening Balance ... ... | 128 | Prize ... ... | 35 |
| Interest ... ... | 35 | Closing Balance ... ... | 128 |
| Total ... | 163 | Total ... | 163 |

### (68) *Griffith Memorial Prize Fund.*

3½ per cent G. P. Notes for Rs 27,800

| | | | |
|---|---|---|---|
| Opening Balance ... ... | 1,164 | Prize ... ... | 900 |
| Interest ... ... | 973 | Closing Balance ... ... | 1,237 |
| Total ... | 2,137 | Total ... | 2,137 |

### (69) *Gunendranath Medal Fund.*

3½ per cent G P Notes for Rs 2,000

| | | | |
|---|---|---|---|
| Opening Balance ... ... | 120 | Medal ... ... ... | 70 |
| Interest ... ... ... | 70 | Closing Balance ... ... | 120 |
| Total ... | 190 | Total ... | 190 |

### (70) *Guruprasanna Ghose Legacy Fund.*

3½ per cent G P Notes for Rs 2,04,000

| | | | |
|---|---|---|---|
| Opening Balance ... ... | 1,385 | Scholarships ... ... | 3,500 |
| Interest ... ... ... | 7,140 | Repayment of loan from the General Funds ... | 3,853 |
| | | Closing Balance ... ... | 1,172 |
| Total ... | 8,525 | Total ... | 8,525 |

V. Special Funds *contd.*

### (71) *Harakinkari Debi Medal Fund.*

3 per cent. G P Notes for Rs 500

| INCOME. | Rs. | EXPENDITURE. | Rs. |
|---|---|---|---|
| Opening Balance ... ... | 20 | Medal ... ... ... | 15 |
| Interest ... ... ... | 15 | Closing Balance ... ... | 20 |
| Total ... | 35 | Total ... | 35 |

### (72) *Harishchandra Prize Fund.*

3½ per cent G P Notes for Rs 3,200
5 " " War Loan " " 400
Total .. Rs 3,600

| | | | |
|---|---|---|---|
| Opening Balance ... ... | 728 | Prize ... ... ... | 112 |
| Interest ... ... ... | 132 | Closing Balance ... ... | 748 |
| Total ... | 860 | Total ... | 860 |

### (73) *Hemantakumar Memorial Fund*

3½ per cent G P Notes for Rs 2,600
5 " " War Loan " " 200
Total ... Rs 2,800

| | | | |
|---|---|---|---|
| Opening Balance ... ... | 294 | Medal ... ... ... | 100 |
| Interest ... ... ... | 101 | Closing Balance ... ... | 295 |
| Total ... | 395 | Total ... | 395 |

### (74) *Hemchandra Gossain Memorial Fund.*

3½ per cent G P Notes for Rs 37,500
5 " " War Loan " " 2,500
Total ... Rs 40,000

| | | | |
|---|---|---|---|
| Opening Balance ... ... | 1,362 | Prizes and Medals ... ... | 1,300 |
| Interest ... ... ... | 1,437 | Closing Balance ... ... | 1,499 |
| Total ... | 2,799 | Total ... | 2,799 |

### (75) *Herschel Testimonial Fund.*

3½ per cent G. P. Notes for Rs 1,800

| | | | |
|---|---|---|---|
| Opening Balance ... ... | 137 | Medal ... ... ... | 63 |
| Interest ... ... ... | 63 | Closing Balance ... ... | 137 |
| Total ... | 200 | Total ... | 200 |

### (76) *Ibrahim Solaimain Salehjee Memorial Fund.*

6 per cent. Ten-year Bonds for Rs. 5,600.

| | | | |
|---|---|---|---|
| Opening Balance ... . | 561 | Closing Balance ... ... | 897 |
| Interest ... ... | 336 | | |
| Total ... | 897 | Total ... | 897 |

## IV. Special Funds—*contd.*

### (77) *Inglis Memorial Fund.*

3½ per cent G. P Notes for Rs 1,500
5 " War Loans " " 100

Total .. Rs 1,600

| INCOME. | | Rs. | EXPENDITURE. | | Rs. |
|---|---|---|---|---|---|
| Opening Balance | ... ... | 136 | Medal and Prize | ... ... | 57 |
| Interest | ... ... | 57 | Closing Balance | ... ... | 136 |
| Total | ... | 193 | Total | ... | 193 |

### (78) *Dr. J. N. Dutt Medal Fund.*

3½ per cent G P Notes for Rs 1,000

| | | | | | |
|---|---|---|---|---|---|
| Opening Balance | ... ... | 152 | Medal | ... ... | 35 |
| Interest | ... ... | 35 | Closing Balance | ... ... | 152 |
| Total | ... | 187 | Total | ... | 187 |

### (79) *Jagatchandra Dasgupta Coronation Medal Fund*

3½ per cent G P Notes for Rs. 400

| | | | | | |
|---|---|---|---|---|---|
| Opening Balance | ... ... | 95 | Medal | ... ... | 14 |
| Interest | ... ... | 14 | Closing Balance | ... ... | 95 |
| Total | ... | 109 | Total | ... | 109 |

### (80) *Jatindrachandra Memorial Fund.*

3½ per cent G P Notes for Rs 800

| | | | | | |
|---|---|---|---|---|---|
| Opening Balance | ... ... | 121 | Prize and Medal | ... ... | 28 |
| Interest | ... ... | 28 | Closing Balance | ... ... | 121 |
| Total | ... | 149 | Total | ... | 149 |

### (81) *Jaynarain Prize Fund.*

3½ per cent G P Notes for Rs 500

| | | | | | |
|---|---|---|---|---|---|
| Opening Balance | ... ... | 88 | Prize ... | ... ... | 17 |
| Interest | ... ... | 17 | Closing Balance | ... ... | 88 |
| Total | ... | 105 | Total | ... | 105 |

### (82) *Jhumma Medal Fund.*

3½ per cent G P Notes for Rs 500

| | | | | | |
|---|---|---|---|---|---|
| Opening Balance | ... ... | 36 | Medal | ... ... | 17 |
| Interest | ... ... | 17 | Closing Balance | ... ... | 36 |
| Total | ... | 53 | Total | ... | 53 |

### (83) *Jitendra Scholarship Fund.*

3½ per cent. G P Notes for Rs. 10,300
5 " War Loan " " 800

Total ... Rs. 11,100

| | | | | | |
|---|---|---|---|---|---|
| Opening Balance | ... ... | 845 | Scholarship | ... ... | 360 |
| Interest | ... ... | 400 | Closing Balance | ... ... | 885 |
| Total | ... | 1,245 | Total | ... | 1,245 |

V. Special Funds—*contd.*

### (84) *Jogendrachandra Ghosh Research Prize Fund.*

3½ per cent G P Notes for Rs 10,000

| INCOME. | | Rs. | EXPENDITURE. | | Rs. |
|---|---|---|---|---|---|
| Opening Balance | ... ... | 6,487 | Prize | ... ... | 350 |
| Interest | ... ... | 350 | Closing Balance | ... ... | 6,487 |
| Total | ... | 6,837 | Total | ... | 6,837 |

### (85) *Jubilee Research Prize Fund.*

3½ per cent G P Notes for Rs 30,000

| | | | | | |
|---|---|---|---|---|---|
| Opening Balance | ... ... | 8,575 | Prizes and Medals | ... ... | 1,000 |
| Interest | ... ... | 1,050 | Closing Balance | ... | 8,625 |
| Total | ... | 9,625 | Total | ... | 9,625 |

### (86) *Jyotischandra Basu Medal Fund.*

3½ per cent G P Notes for Rs 500

| | | | | | |
|---|---|---|---|---|---|
| Opening Balance | ... ... | 80 | Medal | ... ... | 17 |
| Interest | ... ... | 17 | Closing Balance | ... ... | 80 |
| Total | ... | 97 | Total | ... | 97 |

### (87) *Jagattarini Medal Fund.*

3½ per cent G. P Notes for Rs 3,000

| | | | | | |
|---|---|---|---|---|---|
| Opening Balance | ... ... | 108 | Medal | ... ... | 200 |
| Interest | ... ... | 105 | Closing Balance | ... ... | 13 |
| Total | ... | 213 | Total | ... | 213 |

### (88) *Jadunath Mahalakshi Medal Fund.*

3½ per cent G P. Notes for Rs 1,000

| | | | | | |
|---|---|---|---|---|---|
| Opening Balance | ... ... | 58 | Medal | ... ... | 35 |
| Interest | ... ... | 35 | Closing Balance | ... ... | 58 |
| Total | ... | 93 | Total | ... | 93 |

### (89) *Janaki Prasad Bose Scholarship Fund.*

6 per cent. Ten-year Bond, 1932, for Rs 4,000

| | | | | | |
|---|---|---|---|---|---|
| Opening Balance | ... ... | 119 | Scholarship | ... ... | 240 |
| Interest | ... ... | 240 | Closing Balance | ... ... | 119 |
| Total | ... | 359 | Total | ... | 359 |

### (90) *Kadambini Dasi Medal Fund.*

3½ per cent G P Notes for Rs 500

| | | | | | |
|---|---|---|---|---|---|
| Opening Balance | ... ... | 34 | Medal | ... ... | 17 |
| Interest | ... ... | 17 | Closing Balance | ... ... | 34 |
| Total | ... | 51 | Total | ... | 51 |

## V. Special Funds—*contd.*

### (91) *Kalidas Gold Medal Fund.*

3½ per cent G. P. Notes for Rs 2,000

| INCOME. | | Rs. | EXPENDITURE. | | Rs. |
|---|---|---|---|---|---|
| Opening Balance | ... ... | 243 | Medal | ... ... | 70 |
| Interest | ... ... | 70 | Closing Balance | ... ... | 243 |
| Total | ... | 313 | Total | ... | 313 |

### (92) *Keshubchandra Sen Memorial Fund.*

3½ per cent G P Notes for Rs 8,300
5 " " War Loan " " 100
Total . Rs 8,400

| | | | | | |
|---|---|---|---|---|---|
| Opening Balance | ... ... | 688 | Prizes and Medals | ... ... | 280 |
| Interest | ... ... | 295 | Closing Balance | ... ... | 703 |
| Total | ... | 983 | Total | ... | 983 |

### (93) *Kesablal Mallik Medal Fund.*

3½ per cent G P Notes for Rs. 1,500

| | | | | | |
|---|---|---|---|---|---|
| Opening Balance | ... ... | 87 | Medal | ... ... | 52 |
| Interest | ... ... | 52 | Closing Balance | ... ... | 87 |
| Total | ... | 139 | Total | ... | 139 |

### (94) *Khujastha Akhtar Banu Suhrawardy Medal Fund.*

5½ per cent War Bonds, 1928, for Rs 1,000

| | | | | | |
|---|---|---|---|---|---|
| Opening Balance | ... ... | 61 | Medal | ... ... | 55 |
| Interest | ... ... | 55 | Closing Balance | ... ... | 61 |
| Total | ... | 116 | Total | ... | 116 |

### (95) *King George and Queen Mary Medal Fund.*

4 per cent Cal. Port Trust Deb for Rs 1,000

| | | | | | |
|---|---|---|---|---|---|
| Opening Balance | ... ... | 70 | Medal | ... ... | 40 |
| Interest | ... ... | 40 | Closing Balance | ... ... | 70 |
| Total | ... | 110 | Total | ... | 110 |

### (96) *Kirtichand Mackenzie Gold Medal Fund.*

3½ per cent. G P Notes for Rs 2,000

| | | | | | |
|---|---|---|---|---|---|
| Opening Balance | ... ... | 200 | Medal | ... ... | 70 |
| Interest | ... ... | 70 | Closing Balance | ... ... | 200 |
| Total | ... | 270 | Total | ... | 270 |

### (97) *Kisorymohan Harakinkari Scholarship Fund.*

3 per cent G P Notes for Rs. 4,000
3½ " " " " " 100
Total Rs. 4,100

| | | | | | |
|---|---|---|---|---|---|
| Opening Balance | ... ... | 1,100 | Scholarship | ... ... | 120 |
| Interest | ... ... | 123 | Closing Balance | ... ... | 1,103 |
| Total | ... | 1,223 | Total | ... | 1,223 |

**V. Special Funds**—*contd.*

### (98) *Kshetramani Prize Fund.*

3½ per cent G. P Notes for Rs 1,500

| INCOME. | | Rs. | EXPENDITURE. | | Rs. |
|---|---|---|---|---|---|
| Opening Balance | ... ... | 165 | Prize | ... ... | 52 |
| Interest | ... ... | 52 | Closing Balance | ... ... | 165 |
| Total | ... | 217 | Total | ... | 217 |

### (99) *Kshetramohan Chatterjee Medal Fund.*

3½ per cent G P. Notes for Rs 1,500

| | | | | | |
|---|---|---|---|---|---|
| Opening Balance | ... ... | 180 | Medal | ... ... | 52 |
| Interest | ... ... | 52 | Closing Balance | ... ... | 180 |
| Total | ... | 232 | Total | ... | 232 |

### (100) *Madhusudan Medal Fund.*

3½ per cent G P Notes for Rs 1,700

| | | | | | |
|---|---|---|---|---|---|
| Opening Balance | ... ... | 146 | Medal | ... ... | 59 |
| Interest | ... ... | 59 | Closing Balance | ... ... | 146 |
| Total | ... | 205 | Total | ... | 205 |

### (101) *Maharaja of Darbhanga Scholarship Fund*

3½ per cent G P Notes for Rs 9,000
5 " " War Loan " " 2,900
Total ... Rs 11,900

| | | | | | |
|---|---|---|---|---|---|
| Opening Balance | ... ... | 2,880 | Scholarship | ... ... | 600 |
| Interest | ... ... | 460 | Closing Balance | ... ... | 2,740 |
| Total | ... | 3,340 | Total | ... | 3,340 |

### (102) *Maharaja of Kasimbazar Scholarship Fund.*

3½ per cent G P Notes for Rs 51,300

| | | | | | |
|---|---|---|---|---|---|
| Opening Balance | ... ... | 2,750 | Scholarship | ... ... | 1,800 |
| Interest | ... ... | 1,795 | Closing Balance | ... ... | 2,745 |
| Total | ... | 4,545 | Total | ... | 4,545 |

### (103) *Maharaja Tagore Medal Fund.*

3½ per cent G P Notes for Rs 3,800
5 " " War Loan " " 700
Total ... Rs 4,500

| | | | | | |
|---|---|---|---|---|---|
| Opening Balance | ... ... | 1,044 | Medals | ... ... | 168 |
| Interest | ... ... | 168 | Closing Balance | ... ... | 1,044 |
| Total | ... | 1,212 | Total | ... | 1,212 |

### (104) *Mahendranath Ray Prize Fund.*

100 Shares of the Calcutta Tramway Co, Ltd, Rs 10,000

| | | | | | |
|---|---|---|---|---|---|
| Opening Balance | ... ... | 1,986 | Prize and Medal | ... ... | 920 |
| Interest | ... ... | 460 | Closing Balance | ... ... | 1,526 |
| Total | ... | 2,446 | Total | ... | 2,446 |

## V. Special Funds—*contd*

### (105) *Manackjee Kustomjee Memorial Fund.*

3½ per cent G P Notes for Rs 8,200

| INCOME. | | Rs. | EXPENDITURE | | Rs. |
|---|---|---|---|---|---|
| Opening Balance | ... ... | 686 | Scholarship and Medal | ... | 277 |
| Interest | ... .. | 287 | Closing Balance ... | ... | 696 |
| Total | ... | 973 | Total | ... | 973 |

### (106) *Manmathanath Bhattacharyya Memorial Fund*

4 per cent Cal Municipal Deb for Rs 1,500

| | | | | | |
|---|---|---|---|---|---|
| Opening Balance | ... ... | 152 | Medal | ... ... | 60 |
| Interest | ... ... | 60 | Closing Balance | ... ... | 152 |
| Total | ... | 212 | Total | ... | 212 |

### (107) *Matilal Mallik Memorial Fund*

3½ per cent G P Notes for Rs 1,600

| | | | | | |
|---|---|---|---|---|---|
| Opening Balance | ... ... | 160 | Medal | ... | 56 |
| Interest | ... ... | 56 | Closing Balance | .. | 160 |
| Total | ... | 216 | Total | .. | 216 |

### (108) *McCann Memorial Fund.*

3½ per cent G P Notes for Rs 600

| | | | | | |
|---|---|---|---|---|---|
| Opening Balance | ... ... | 158 | Medal | ... ... | 21 |
| Interest | ... ... | 21 | Closing Balance | ... ... | 158 |
| Total | ... | 179 | Total | ... | 179 |

### (109) *McLeod Medal Fund.*

3½ per cent G P Notes for Rs 1,100

| | | | | | |
|---|---|---|---|---|---|
| Opening Balance | ... ... | 58 | Medal | ... ... | 38 |
| Interest | ... ... | 38 | Closing Balance | ... .. | 58 |
| Total | ... | 96 | Total | ... | 96 |

### (110) *Midwifery Medal Fund*

3½ per cent G P Notes for Rs 3,000

| | | | | | |
|---|---|---|---|---|---|
| Opening Balance | ... ... | 17 | Medal | ... ... | 105 |
| Interest | ... ... | 105 | Closing Balance | ... ... | 17 |
| Total | ... | 122 | Total | ... | 122 |

### (111) *Mohinimohan Mitra Memorial Fund.*

3½ per cent G P, Notes for Rs 500

| | | | | | |
|---|---|---|---|---|---|
| Opening Balance | ... ... | 52 | Medal | ... ... | 17 |
| Interest | ... ... | 17 | Closing balance | ... ... | 52 |
| Total | ... | 69 | Total | ... | 69 |

**V. Special Funds—*contd.***

### (112) *Mohinimohan Ray Medal Fund.*

3½ per cent. G P Notes for Rs. 1,000

| INCOME. | | Rs. | EXPENDITURE. | | Rs. |
|---|---|---|---|---|---|
| Opening Balance | ... ... | 92 | Medal | ... ... | 35 |
| Interest | ... ... | 35 | Closing Balance | ... ... | 92 |
| Total | ... | 127 | Total | ... | 127 |

### (113) *Mokshadasundari and Nalinisundari Medal Fund.*

4 per cent Cal Port Trust Debentures for Rs 5,000

| | | | | | |
|---|---|---|---|---|---|
| Opening Balance | ... ... | 2,270 | Medals | ... ... | 200 |
| Interest | ... ... | 200 | Closing Balance | ... ... | 2,270 |
| Total | ... | 2,470 | Total | ... | 2,470 |

### (114) *Mouat Testimonial Fund*

3½ per cent G P Notes for Rs 1,500

| | | | | | |
|---|---|---|---|---|---|
| Opening Balance | ... ... | 10 | Medal | ... ... | 52 |
| Interest | ... ... | 52 | Closing Balance | ... ... | 10 |
| Total | ... | 62 | Total | ... | 62 |

### (115) *Mrinalini Medal Fund.*

3½ per cent G P Notes for Rs 2,500

| | | | | | |
|---|---|---|---|---|---|
| Opening Balance | ... ... | 375 | Medal | ... ... | 87 |
| Interest | ... | 87 | Closing Balance | ... ... | 375 |
| Total | ... | 462 | Total | ... | 462 |

### (116) *N. N. Ghose Memorial Fund.*

4 per cent Cal Municipal Deb for Rs 1,000

| | | | | | |
|---|---|---|---|---|---|
| Opening Balance | ... ... | 68 | Medal | ... ... | 40 |
| Interest | ... ... | 40 | Closing Balance | ... ... | 68 |
| Total | ... | 108 | Total | ... | 108 |

### (117) *Nabinchandra Kundu Prize Fund.*

3½ per cent G P. Notes for Rs 1,000

| | | | | | |
|---|---|---|---|---|---|
| Opening Balance | ... ... | 70 | Prize | ... ... | 35 |
| Interest | ... ... | 35 | Closing Balance | ... ... | 70 |
| Total | ... | 105 | Total | ... | 105 |

### (118) *Nobokristo Kar Medal Fund.*

3½ per cent G P Notes for Rs 1,400

| | | | | | |
|---|---|---|---|---|---|
| Opening Balance | ... ... | 210 | Medal | ... ... | 49 |
| Interest | ... ... | 49 | Closing Balance | ... ... | 210 |
| Total | ... | 259 | Total | ... | 259 |

**V. Special Funds—*contd.***

### (119) *Nagendrananda De Medal Fund.*

3 per cent G P Notes for Rs 400
3½ " " " " " " 800
Total Rs 1,200

| INCOME | | Rs | EXPENDITURE | | Rs |
|---|---|---|---|---|---|
| Opening Balance | ... ... | 77 | Medal | ... ... | 40 |
| Interest | .. ... | 40 | Closing Balance | .. ... | 77 |
| Total | ... | 117 | Total | ... | 117 |

### (120) *Narayanchandra Sen Medal Fund*

3½ per cent G P Notes for Rs 1,000

| | | | | | |
|---|---|---|---|---|---|
| Opening Balance | ... ... | 78 | Medal | ... ... | 35 |
| Interest | ... ... | 35 | Closing Balance | ... ... | 78 |
| Total | ... | 113 | Total | .. | 113 |

### (121) *Rai Narasingha Datta Bahadur Memorial Fund*

4 per cent Cal Port Trust Deb for Rs 2,500

| | | | | | |
|---|---|---|---|---|---|
| Opening Balance | ... ... | 10 | Scholarship | ... .. | 96 |
| | | | Students' Fund | . .. | 4 |
| Interest | ... ... | 100 | Closing Balance | . ... | 10 |
| Total | ... | 110 | Total | ... | 110 |

### (122) *Nandolal Gooptu Scholarship Fund*

3½ per cent G P Notes for Rs 3,700

| | | | | | |
|---|---|---|---|---|---|
| Opening Balance | ... ... | 200 | Scholarship | ... .. | 120 |
| Interest | .. .. | 129 | Closing Balance | .. ... | 209 |
| Total | ... | 329 | Total | ... | 329 |

### (123) *Onauthnauth Deb Law Research Fund*

4 per cent Cal Port Trust Deb for Rs 25,000

| | | | | | |
|---|---|---|---|---|---|
| Opening Balance | ... ... | 6 764 | Prize and Medal | ... ... | 1,000 |
| Interest | ... ... | 1,000 | Closing Balance | ... ... | 6,764 |
| Total | ... | 7,764 | Total | ... | 7,764 |

### (124) *P. C. Majumdar Memorial Fund*

3½ per cent G P Notes for Rs 1,500

| | | | | | |
|---|---|---|---|---|---|
| Opening Balance | ... ... | 142 | Medal | ... ... | 52 |
| Interest | ... ... | 52 | Closing Balance | ... ... | 142 |
| Total | ... | 194 | Total | ... | 194 |

### (125) *Sir P. C. Ray Chemical Research Fund*

6 per cent U P Bonds for Rs 10,000

| | | | | | |
|---|---|---|---|---|---|
| Opening Balance | ... ... | 306 | Nagarjuna Prize | ... ... | 600 |
| Interest | ... ... | 600 | Closing Balance | ... ... | 306 |
| Total | ... | 906 | Total | ... | 906 |

## V. Special Funds—*contd*

### (126) *P. Mukerjee Medal Fund*

5 per cent G P Notes for Rs 400

| INCOME | | Rs | EXPENDITURE. | | Rs. |
|---|---|---|---|---|---|
| Opening Balance | ... ... | 50 | Medal | ... ... | 20 |
| Interest | ... ... | 20 | Closing Balance | ... ... | 50 |
| Total | ... | 70 | Total | ... | 70 |

### (127) *Pachete Sanskrit Prize Fund*

3½ per cent G P Notes for Rs 2,100

| | | | | | |
|---|---|---|---|---|---|
| Opening Balance | ... ... | 300 | Prize | ... ... | 73 |
| Interest | ... ... | 73 | Closing Balance | ... ... | 300 |
| Total | ... | 373 | Total | ... | 373 |

### (128) *Padmabati Medal Fund*

3½ per cent G P Notes for Rs 2,600
5 „ „ War Loan „ „ 300
Total Rs 2,900

| | | | | | |
|---|---|---|---|---|---|
| Opening Balance | ... ... | 325 | Medal | ... ... | 100 |
| Interest | ... ... | 106 | Closing Balance | ... ... | 331 |
| Total | ... | 431 | Total | ... | 431 |

### (129) *Parbuttycharan Roy Medal Fund*

3 per cent G P Notes for Rs 2,000

| | | | | | |
|---|---|---|---|---|---|
| Opening Balance | ... ... | 85 | Medal | ... ... | 60 |
| Interest | .. ... | 60 | Closing Balance | ... ... | 85 |
| Total | ... | 145 | Total | ... | 145 |

### (130) *Peyarichand Mitter Testimonial Fund.*

3½ per cent G P Notes for Rs 600

| | | | | | |
|---|---|---|---|---|---|
| Opening Balance | ... ... | 150 | Medal | ... ... | 21 |
| Interest | ... ... | 21 | Closing Balance | ... ... | 150 |
| Total | ... | 171 | Total | ... | 171 |

### (131) *Pedlar Memorial Fund.*

3½ per cent G P Notes for Rs 600

| | | | | | |
|---|---|---|---|---|---|
| Opening Balance | ... ... | 41 | Medal | ... ... | 17 |
| Interest | ... ... | 17 | Closing Balance | ... ... | 41 |
| Total | ... | 58 | Total | ... | 58 |

### (132) *Philip Samuel Smith Memorial Fund.*

3½ per cent G P Notes for Rs 1,100

| | | | | | |
|---|---|---|---|---|---|
| Opening Balance | ... ... | 218 | Prize | ... ... | 38 |
| Interest | ... ... | 38 | Closing Balance | ... ... | 218 |
| Total | ... | 256 | Total | ... | 256 |

## V. Special Funds—*contd*

### (133) *Prasannakumar Sarbadhikary Memorial Fund*

3½ per cent G P Notes for Rs 1,000
4 " " Cal Municipal Deb " " 500

Total Rs 1,500

| INCOME. | | Rs | EXPENDITURE. | | Rs |
|---|---|---|---|---|---|
| Opening Balance | ... ... | 65 | Medal | ... ... | 55 |
| Interest | .. ... | 55 | Closing Balance | ... ... | 65 |
| Total | ... | 120 | Total | ... | 120 |

### (134) *Prativa Debi Scholarship Fund*

6 per cent Ten-year bonds, 1932, for Rs 2,000

| | | | | | |
|---|---|---|---|---|---|
| Opening Balance | ... ... | 60 | Scholarship | ... ... | 120 |
| Interest | ... ... | 120 | Closing Balance | ... ... | 60 |
| Total | ... | 180 | Total | ... | 180 |

### (135) *Premchand Roychand Fund*

3½ per cent G P Notes for Rs 2,45,000

| | | | | | |
|---|---|---|---|---|---|
| Opening Balance | ... .. | 12,037 | Scholarships | ... ... | 18,900 |
| Interest | ... ... | 8,575 | Closing Balance | .. ... | 1,712 |
| Total | ... | 20,612 | Total | ... | 20,612 |

### (136) *Priyonath Dutt Legacy Fund*

3½ per cent G P Notes for Rs 13,200

| | | | | | |
|---|---|---|---|---|---|
| Opening Balance | ... ... | 4,590 | Scholarship | ... ... | 432 |
| Interest | ... ... | 462 | Closing Balance | ... ... | 4,620 |
| Total | . | 5,052 | Total | ... | 5,052 |

### (137) *Quindam Medal Fund*

3½ per cent G P Notes for Rs 500

| | | | | | |
|---|---|---|---|---|---|
| Opening Balance | ... .. | 40 | Medal | ... ... | 17 |
| Interest | ... ... | 17 | Closing Balance | ... ... | 40 |
| Total | ... | 57 | Total | ... | 57 |

### (138) *Radhakanta Memorial Fund*

3½ per cent G P Notes for Rs 3,700
5 " " War Loan " " 500

Total Rs 4,200

| | | | | | |
|---|---|---|---|---|---|
| Opening Balance | ... ... | 588 | Medal | ... ... | 100 |
| Interest | ... ... | 154 | Closing Balance | ... ... | 642 |
| Total | ... | 742 | Total | ... | 742 |

### (139) *Rai Radhikaprasanna Mookerjee Bahadur Memorial Fund.*

3½ per cent G P Notes for Rs 1,400

| | | | | | |
|---|---|---|---|---|---|
| Opening Balance | ... ... | 240 | Medal and Prize | ... ... | 49 |
| Interest | ... ... | 49 | Closing Balance | ... ... | 240 |
| Total | ... | 289 | Total | ... | 289 |

## V. Special Funds—*contd.*

### (140) *Raiksori Dasi and Durga Dasi Scholarship Fund.*

3½ per cent G P Notes for Rs 6,000

| INCOME. | | Rs. | EXPENDITURE. | | Rs. |
|---|---|---|---|---|---|
| Opening Balance | ... ... | 10 | Scholarship | ... ... | 192 |
| | | | Ilsobamondlai H E School Fund | | 18 |
| Interest | ... ... | 210 | Closing Balance | ... ... | 10 |
| Total | ... | 220 | Total | ... | 220 |

### (141) *Rajendranath Dutt and Monmohini Medal Fund.*

3½ per cent G P Notes for Rs 1,000

| | | | | | |
|---|---|---|---|---|---|
| Opening Balance | ... ... | 68 | Medal | ... ... | 35 |
| Interest | ... ... | 35 | Closing Balance | ... ... | 68 |
| Total | ... | 103 | Total | ... | 103 |

### (142) *Rajkrishna Kshetramoni Scholarship Fund.*

3 per cent G P Notes for Rs 4,000
3½ " " " " " 100
Total Rs 4,100

| | | | | | |
|---|---|---|---|---|---|
| Opening Balance | ... ... | 725 | Scholarship | ... ... | 120 |
| Interest | ... | 123 | Closing Balance | ... ... | 728 |
| Total | ... | 848 | Total | ... | 848 |

### (143) *Dr. Rakhal Das Ghosh Prize Fund.*

4 per cent Cal Port Trust Deb for Rs 500

| | | | | | |
|---|---|---|---|---|---|
| Opening Balance | ... ... | 82 | Prize | ... ... | 20 |
| Interest | ... ... | 20 | Closing Balance | ... ... | 82 |
| Total | ... | 102 | Total | ... | 102 |

### (144) *Ramachandra Mitra Prize Fund*

3½ per cent G P Notes for Rs 1,000

| | | | | | |
|---|---|---|---|---|---|
| Opening Balance | ... ... | 72 | Prize | ... ... | 35 |
| Interest | ... ... | 35 | Closing Balance | ... ... | 72 |
| Total | ... | 107 | Total | ... | 107 |

### (145) *Rani Ramraksh' Medal Fund.*

3½ per cent G P Notes for Rs 6,500

| | | | | | |
|---|---|---|---|---|---|
| Opening Balance | .. ... | 1,036 | Medal | ... ... | 225 |
| Interest | ... ... | 227 | Closing Balance | ... ... | 1,038 |
| Total | ... | 1,263 | Total | ... | 1,263 |

### (146) *Rashbehari Biswas Scholarship Fund.*

3½ per cent G P Notes for Rs. 4,800

| | | | | | |
|---|---|---|---|---|---|
| Opening Balance | ... ... | 104 | Scholarship | ... ... | 168 |
| Interest | ... ... | 168 | Closing Balance | ... ... | 104 |
| Total | ... | 272 | Total | ... | 272 |

## V. Special Funds—*contd*

### (147) *Sir Rashbehari Ghosh Travelling Fellowship Fund.*

6 per cent U P Bonds for Rs 2,63,000

| INCOME. | Rs | EXPENDITURE. | Rs |
|---|---|---|---|
| Opening Balance ... | ... 10,920 | Allowance to Fellows | ... 17,500 |
| | | Bank Commission, etc | ... 50 |
| Interest ... | . . 15,780 | Closing Balance ... | ... 9,150 |
| Total | ... 26,700 | Total | ... 26,700 |

### (148) *Regina Guha Medal Fund*

5 per cent G P Notes for Rs 1,000

| | | | |
|---|---|---|---|
| Opening Balance ... | ... 32 | Medal . | ... 50 |
| Interest ... | ... 50 | Closing Balance ... | ... 32 |
| Total | ... 82 | Total | ... 82 |

### (149) *Ritche Memorial Fund.*

3½ per cent G P Notes for Rs 1,500
5 „ „ War Loan „ „ 200
Total . Rs 1,700

| | | | |
|---|---|---|---|
| Opening Balance . | ... 99 | Prize | 50 |
| Interest ... | ... 62 | Closing Balance ... | ... 111 |
| Total | .. 161 | Total | ... 161 |

### (150) *Sarada Prasad Memorial Fund*

3½ per cent G P Notes for Rs 11,400

| | | | |
|---|---|---|---|
| Opening Balance ... | ... 4,120 | Scholarships and Prizes | ... 280 |
| Interest ... | ... 399 | Closing Balance ... | ... 4,239 |
| Total | ... 4,519 | Total | ... 4,519 |

### (151) *Sarajini Medal Fund*

3½ per cent G P Notes for Rs 2,500

| | | | |
|---|---|---|---|
| Opening Balance ... | ... 185 | Medal . . | ... 87 |
| Interest ... | ... 87 | Closing Balance ... | ... 185 |
| Total | . . 272 | Total | ... 272 |

### (152) *Sarveswar Purnachandra Medal Fund.*

3½ per cent G P Notes for Rs 1,500

| | | | |
|---|---|---|---|
| Opening Balance ... | ... 158 | Medal ... | ... 52 |
| Interest ... | ... 52 | Closing Balance ... | ... 158 |
| Total | ... 210 | Total | ... 210 |

### (153) *Shamacharan Ganguli Prize Fund.*

3½ per cent. G P Notes for Rs 3,000

| | | | |
|---|---|---|---|
| Opening Balance ... | ... 126 | Prize ... | ... 105 |
| Interest ... | ... 105 | Closing Balance ... | ... 126 |
| Total | ... 231 | Total | ... 231 |

## V. Special Funds—*contd*

### (154) *Siddheswar, Santomoni and Pasupati Medal Fund*

3½ per cent G P Notes for Rs 2,000

| INCOME. | | Rs. | EXPENDITURE. | | Rs. |
|---|---|---|---|---|---|
| Opening Balance | ... ... | 157 | Medals | ... ... | 69 |
| Interest | ... ... | 70 | Closing Balance | ... ... | 158 |
| Total | ... | 227 | Total | ... | 227 |

### (155) *Sibley Scholarship Fund.*

3½ per cent G P Notes for Rs 68,500
5 " " War Loan " " 2,000
Total Rs 70,500

| | | | | | |
|---|---|---|---|---|---|
| Opening Balance | ... ... | 7,853 | Scholarship | ... .. | 2,400 |
| | | | Investment | ... ... | 7,800 |
| Interest | ... ... | 2,467 | Closing Balance | ... ... | 120 |
| Total | ... | 10,320 | Total | ... | 10,320 |

### (156) *Sindhubala Medal Fund.*

3½ per cent G P Notes for Rs 500

| | | | | | |
|---|---|---|---|---|---|
| Opening Balance | .. ... | 37 | Medal | .. ... | 17 |
| Interest | ... ... | 17 | Closing Balance | ... ... | 37 |
| Total | ... | 54 | Total | ... | 54 |

### (157) *Sonamoni Prize Fund.*

3½ per cent G P Notes for Rs 1,000
5 " " War Loan " " 100
Total Rs 1,100

| | | | | | |
|---|---|---|---|---|---|
| Opening Balance | ... ... | 243 | Prize | ... ... | 40 |
| Interest | ... .. | 40 | Closing Balance | ... ... | 243 |
| Total | ... | 283 | Total | ... | 283 |

### (158) *Sooryee Coomar Sarvadhikari Memorial Fund.*

3½ per cent G P Notes for Rs 4,000

| | | | | | |
|---|---|---|---|---|---|
| Opening Balance | ... ... | 538 | Medals | ... ... | 126 |
| Interest | ... ... | 126 | Closing Balance | ... ... | 538 |
| Total | ... | 364 | Total | ... | 664 |

### (159) *Sreekanto Scholarship Fund.*

3 per cent G P Notes for Rs 4,000

| | | | | | |
|---|---|---|---|---|---|
| Opening Balance | ... ... | 398 | Scholarship | ... ... | 120 |
| Interest | ... ... | 120 | Closing Balance | ... ... | 398 |
| Total | ... | 518 | Total | ... | 518 |

### (160) *Stephanos Nirmalendu Ghosh Comparative Theological Lectures Fund.*

3½ per cent G P Notes for Rs 1,00,000

| | | | | | |
|---|---|---|---|---|---|
| Opening Balance | ... ... | 5,560 | Lecturer | ... ... | 9,000 |
| Interest | ... ... | 3,500 | Closing Balance | ... ... | 60 |
| Total | ... | 9,060 | Total | ... | 9,060 |

## V. Special Funds—*contd.*

### (161) *Tagore Fund.*

3½ per cent G P Notes for Rs. 3,29,000

| INCOME. | Rs. | EXPENDITURE. | Rs |
|---|---|---|---|
| Opening Balance ... | ... 2,100 | Salary of Tagore Professors ... | 21,250 |
| | | Contribution for printing lectures | 1,200 |
| Interest ... | .. 11,515 | Publishing "Manu Smriti" ... | 5,000 |
| | | Investment .. | 19,000 |
| Sale proceeds of investment | ... 33,165 | Closing Balance ... | 330 |
| Total | ... 46,780 | Total ... | 46,780 |

### (162) *Taraknath Ray Memorial Fund*

3½ per cent G P Notes for Rs 1,000

| | | | |
|---|---|---|---|
| Opening Balance ... | ... 80 | Prize ... ... | 35 |
| Interest ... | ... 35 | Closing Balance ... ... | 80 |
| Total | ... 115 | Total ... | 115 |

### (163) *Tawney Memorial Fund.*

3 per cent G P Notes for Rs 1,000

| | | | |
|---|---|---|---|
| Opening Balance ... | ... 180 | Prize ... ... ... | 30 |
| Interest ... | ... 30 | Closing Balance .. ... | 180 |
| Total | ... 210 | Total ... | 210 |

### (164) *Thakurdas Keri Medal Fund.*

3½ per cent G P Notes for Rs 3,000

| | | | |
|---|---|---|---|
| Opening Balance ... | ... 165 | Medal . ... | 105 |
| Interest ... | ... 105 | Closing Balance . ... | 165 |
| Total | ... 270 | Total . | 270 |

### (165) *Thakurdas, Prasannamoyi Debi and Kedarnath Memorial Fund.*

3½ per cent G P Notes for Rs 9,000

| | | | |
|---|---|---|---|
| Opening Balance ... | ... 1,030 | Scholarship ... ... | 192 |
| | | Medal ... ... | 100 |
| | | Prize ... ... | 25 |
| Interest ... | ... 315 | Closing Balance ... ... | 1,028 |
| Total | ... 1,345 | Total ... | 1,345 |

### (166) *Trevor Testimonial Fund*

3½ per cent G P. Notes for Rs 1,600
5 " " War Loan " " 200
Total Rs 1,800

| | | | |
|---|---|---|---|
| Opening Balance ... | ... 414 | Medal and Prize ... ... | 66 |
| Interest ... | ... 66 | Closing Balance ... ... | 414 |
| Total | ... 480 | Total ... | 480 |

### (167) *Tripundeswar Mitra Fund.*

3½ per cent G P Notes for Rs 3,000

| | | | |
|---|---|---|---|
| Opening Balance ... | ... 387 | Medal ... ... | 100 |
| Interest ... | ... 105 | Closing Balance ... ... | 392 |
| Total | ... 492 | Total ... | 492 |

## V. Special Funds.—*concld*

### (168) *Umeschandra Saromangala Prize Fund.*

3½ per cent. G P Notes for Rs 500

| INCOME. | | Rs | EXPENDITURE | | Rs |
|---|---|---|---|---|---|
| Opening Balance | ... ... | 33 | Prize | ... ... | 17 |
| Interest | ... ... | 17 | Closing Balance | ... ... | 33 |
| Total | ... | 50 | Total | ... | 50 |

### (169) *Upendranath Mitra Scholarship Fund.*

3½ per cent G P Notes for Rs 17,500

| | | | | | |
|---|---|---|---|---|---|
| Opening Balance | ... ... | 1,334 | Scholarship | ... .. | 1,200 |
| Interest | ... ... | 612 | Closing Balance | .. ... | 1,346 |
| Contribution from Fee Fund | ... | 600 | | | |
| | | | Total | ... | 2,546 |
| Total | ... | 2,546 | | | |

### (170) *Vidyasagar Memorial Fund*

3½ per cent G P Notes for Rs 600
5 „ „ War Loan „ „ 100
Total Rs 700

| | | | | | |
|---|---|---|---|---|---|
| Opening Balance | ... . | 243 | Medal | .. | 15 |
| Interest | ... ... | 26 | Closing Balance | ... ... | 254 |
| Total | .. | 269 | Total | ... | 269 |

### (171) *William Smith Memorial Fund*

3½ per cent G P Notes for Rs 2,200
5 „ „ War Loan „ „ 200
Total Rs 2,400

| | | | | | |
|---|---|---|---|---|---|
| Opening Balance | ... ... | 427 | Prize | ... ... | 70 |
| Interest | ... ... | 87 | Closing Balance | .. ... | 444 |
| Total | ... | 514 | Total | ... | 514 |

### (172) *Woodrow Memorial Scholarship Fund.*

3½ per cent G P Notes for Rs 5,300
5 „ „ War Loan „ „ 200
Total . Rs 5,500

| | | | | | |
|---|---|---|---|---|---|
| Opening Balance | ... ... | 384 | Scholarship | ... ... | 168 |
| Interest | ... ... | 195 | Closing Balance | ... ... | 411 |
| Total | ... | 579 | Total | ... | 579 |

### (173) *Woomeshchandra Mookerjee Medal Fund.*

3 per cent G P Notes for Rs 500

| | | | | | |
|---|---|---|---|---|---|
| Opening Balance | ... ... | 21 | Medal | ... ... | 15 |
| Interest | ... ... | 15 | Closing Balance | ... ... | 21 |
| Total | ... | 36 | Total | ... | 36 |

## VI. Capital Funds.

### (1) *Reserve Fund.*

3½ per cent G P Notes for Rs 7,000

| | Rs. | | Rs. |
|---|---|---|---|
| Opening Balance ... ... | 2,687 | Closing Balance ... ... | 2,932 |
| Interest ... ... | 245 | | |
| Total ... | 2,932 | Total ... | 2,932 |

### (2) *Fish Market Building Fund.*

| | | |
|---|---|---|
| 4 per cent Cal Municipal Debentures for Rs | | 2,3[illegible],500 |
| 6 " " Ten year Bonds | " " | 26,600 |
| 4 " " Fixed Deposit | " " | 2,00,000 |
| Total | Rs | 4,62,100 |

| | | | |
|---|---|---|---|
| Opening Balance ... ... | 1,82,700 | Cost of construction of the building (ground floor and first floor). | 3,94,000 |
| Interest . ... | 10,446 | Closing Balance ... ... | 3,146 |
| Proceeds of Fixed Deposit with interest ... | 2,04,000 | | |
| Total ... | 3,97,146 | Total ... | 3,97,146 |

J. C CHAKRAVORTI, *Registrar* (*offg.*).

## CALCUTTA IMPROVEMENT TRUST.

The accounts of the Calcutta Improvement Trust for the year 1921-22 having been audited by an Auditor appointed by Government, the following Abstract of Accounts is published in accordance with the provisions of section 136 of Bengal Act V of 1911.

T. EMERSON, *Chairman.*

CALCUTTA, *the 11th July 1923.*

---

CHAIRMAN,

### Annual Accounts for the year ended 31st March 1922.

I beg to submit the Accounts for the year ended 31st March 1922.

### CAPITAL ACCOUNT.

At the time of preparing the Budget Estimate for the year 1921-22, it was estimated that the deficit on Capital Account at 31st March 1921 would amount to Rs. 129·65 lakhs. This was on the understanding that the sanctioned loan of Rs 50 lakhs would be brought to account, but as it was not necessary to draw on this source of income the entire loan of Rs. 50 lakhs has been excluded from the Capital Receipts, which show a deficit of Rs. 167·78 lakhs, or Rs. 11 87 better than the estimate. This is accounted for by an increase in the receipts and decrease in the expenditure of, approximately, Rs. 6 lakhs, or in all Rs. 12 lakhs better during the months of January to March 1922.

RECEIPTS.—The Receipts for the year ended 31st March 1922 amounted to Rs 33½ lakhs (exclusive of Rs. 33 lakhs drawn against the previous year's Debenture loan of Rs. 50 lakhs) against an estimate of Rs. 54 lakhs The difference between the actuals and the estimates is arrived at as follows :—

1921-22

| | Budget. | Actuals | Difference. |
|---|---|---|---|
| | Rs. | Rs. | Rs. |
| Fees under section 78 ... | 3,00,000 | 4,18,800 | + 1 18,800 |
| Sale of land ... | 50,00,000 | 26,20,000 | - 23,80,000 |
| „ buildings ... | 1,00,000 | 3,26,700 | + 2,26,700 |
| Fees for footings ... | 500 | 6,700 | + 6,200 |
| Sale of moveable property, etc. | 2,000 | 9,000 | + 7,000 |
| | Total | ... | - 20,21,300 |

EXPENDITURE.—The total expenditure for the year was Rs. 105 1/10 lakhs, or Rs. 23½ lakhs less than the Budget Estimate. The difference between the actuals and the estimates is arrived at as follows :—

1921-22.

| Particulars. | Budget. | Actuals. | Difference. |
|---|---|---|---|
| | Rs. | Rs. | Rs. |
| Cost of land ... | 1,05,29,500 | 82,48,084 | - 22,81,415 |
| Engineering works (including stores) ... ... | 20,03,000 | 22,43,215 | + 2,40,215 |
| Advances to Corporation ... | 1,90,100 | ... | - 1,90,100 |
| Cost of Land Acquisition Office ... ... | 99,000 | ... | - 99,000 |
| Other expenditure ... | 1,34,900 | 1,00,313 | - 34,587 |
| Total ... | 1,29,56,500 | 1,05,91,612 | —23,64,887 |

The closing deficit on Capital Account which it was estimated would amount to Rs. 205·18 lakhs (exclusive of the receipt of Rs. 33 lakhs from the previous year's Debenture Loan of Rs. 50 lakhs) stood at Rs. 206·88 lakhs arrived at as follows :—

| 1921. | Estimated. | Actuals. | |
|---|---|---|---|
| | Rs. | Rs. | |
| Opening Balance (deficit) ... | 129·65 | 167·78 | Deficit. |
| Receipts, 1921-22 ... ... | 54·03 | 33·81 | |
| | 75·62 | 133·97 | „ |
| Debenture Loan ... ... | ... | 33· | |
| | 75 62 | 100 97 | „ |
| Expenditure to 31st March 1922 ... | 129·56 | 105·91 | |
| | 205·18 | 206·88 | „ |

## REVENUE ACCOUNT.

RECEIPTS.—The total receipts for the year are Rs. 35,66,000 against a Budget Estimate of Rs. 35,34,000.

EXPENDITURE.—The expenditure for the year was Rs 11,42,900 against a Budget Estimate of Rs 12,53,000. The decrease of Rs 1,11,000 is principally due to savings under Establishment and Litigation.

The closing balance on Revenue Account shows a surplus of Rs. 2,48,02,487-9-10 of which a sum of Rs. 2,06,88,728-8-7 has been spent on Capital Account to meet payments in excess of Capital Receipts. The net balance of Rs. 41,13,759-1-3 was held as follows :—

| | | | | Rs. | A. | P. |
|---|---|---|---|---|---|---|
| 3½ per cent. Government Promissory Notes, etc. | | | ... | 18,83,539 | 0 | 0 |
| War Bonds | ... | ... | ... | 600 | 0 | 0 |
| Floating Deposit | ... | ... | ... | 1,50,000 | 0 | 0 |
| Cash at Bank | ... | ... | ... | 66,876 | 3 | 0 |
| | | | Total | 21,01,015 | 3 | 0 |

*Add*—

| | | Rs | A. | P. | | | |
|---|---|---|---|---|---|---|---|
| Advances made by the Trust | ... | 23,27,229 | 12 | 9 | | | |
| *Less* monies held by the Trust | ... | 3,14,485 | 14 | 6 | | | |
| | | | | | 20,12,743 | 14 | 3 |
| | | | | As above | 41,13,759 | 1 | 3 |

A. J. SMAIL,

*The 19th August 1922.* *Chief Accountant.*

---

## Balance Sheet as at 31st March, 1922.

### LIABILITIES

| | Rs | A | P | Rs | A | P |
|---|---|---|---|---|---|---|
| Deposit of Contractors— | | | | | | |
| On Contract | 34,449 | 14 | 0 | | | |
| „ Tender | 45,129 | 12 | 0 | | | |
| Retention Money .. | 1,11,796 | 1 | 11 | | | |
| | | | | 1,91,375 | 11 | 11 |
| Sundry Creditors .. | . | | | 18,872 | 6 | 10 |
| Provident Fund Depositors' Account | 1,02,373 | 15 | 5 | | | |
| Provident Fund Depositors' Account (Tribunal) .. | 1,863 | 12 | 4 | | | |
| | | | | 1,04,237 | 11 | 9 |
| *Debenture Loan of Rs 50 lakhs issued to Imperial Bank of India repayable in 1931 and bearing interest at 6½ per cent .. | ... | | | 50,00,000 | 0 | 0 |
| Surplus on Revenue Account . | .. | | | 2,48,02,487 | 9 | 10 |
| Total ... | | | | 3,01,16,973 | 8 | 4 |

### ASSETS

| | Rs | A | P | Rs | A | P |
|---|---|---|---|---|---|---|
| Securities— | | | | | | |
| 3½ per cent Government Promissory Notes | 20,69,800 | 0 | 0 | 16,48,239 | 0 | 0 |
| 4 per cent Calcutta Port Trust Debentures | 1,74,100 | 0 | 0 | 1,14,100 | 0 | 0 |
| 4 per cent Calcutta Municipal Debentures .. .. | 1,11,900 | 0 | 0 | 1,20,900 | 0 | 0 |
| | | | | 18,83,539 | 0 | 0 |
| War Bonds .. .. . | | | | 600 | 0 | 0 |
| Floating Deposit . | | | | 1,50,000 | 0 | 0 |
| Sundry Advances .. .. .. | | | | 23,27,229 | 12 | 9 |
| Petty Cash Imprests . | 600 | 0 | 0 | | | |
| Cash in hand . | 24,854 | 0 | 9 | | | |
| Current Account with the Imperial Bank of India .. ... ... | 40,183 | 2 | 8 | | | |
| | | | | 65,637 | 3 | 0 |
| Cash in Transit . . . | | | | 1,239 | 0 | 0 |
| Balance of Loan Account of Rs 50 lakhs with the Imperial Bank of India unexpended at 31st March 1922 | | | | 17,00,000 | 0 | 0 |
| Proportion of the Rs 50 lakhs loan expended on Capital Works . . | | | | 33,00,000 | 0 | 0 |
| Advance from Revenue for Capital Expenditure ... . ... ... | | | | 2,06,88,728 | 8 | 7 |
| Total ... | | | | 3,01,16,973 | 8 | 4 |

*(The above Loan is repayable in ten years by the issue of a fresh loan or from the sale of surplus land.)

A. J. SMAIL, T. EMERSON,

*Chief Accountant.* *Chairman*

## ACCOUNTS, 1921-22.

### Capital Account—Statement of Income and Expenditure, 1921-22.

INCOME.

| Receipts | Budget for 1921-22 | Actuals for 1921-22. | Actuals to 31st March 1921. | Actuals to 31st March 1922. |
|---|---|---|---|---|
| | Rs. | Rs A P. | Rs. A P. | Rs A P. |
| 1.—*Under Section 122(a)*— | | | | |
| Receipts under Section 78— | | | | |
| 1. Scheme No I (Surtibagan) .. | | .. | 61,018 13 9 | 61,018 13 9 |
| 2 " " I (Alteration) (Surtibagan). | | 12,200 0 0 | 11,900 0 0 | 24,100 0 0 |
| 3 " " IA Ditto ... | | ... | 1,15,500 0 0 | 1,15,500 0 0 |
| 4. " " IB (Surtibagan) ... | | ... | 8,647 0 0 | 8,647 0 0 |
| 5. " " IC (Ismail Madan Lane) | | . | 64,175 13 2 | 64,175 13 2 |
| 6. " " II (Shambazar Bridge Road) | | ... | 27,435 0 0 | 27,435 0 0 |
| 7. " " IIA Ditto .. | | ... | 580 0 0 | 580 0 0 |
| 8. " " III (Wards Institution Lane) | | 13,100 0 0 | 15,107 0 0 | 28,207 0 0 |
| 9 " " IV (Russa Road Widening). | | 26,390 0 0 | 21,346 0 0 | 47,736 0 0 |
| 10 " " IVA (Russa Road Extension) | | 7 865 0 0 | 90,636 12 0 | 98,501 12 0 |
| 11 " " V (Bhowanipore) ... | | 18,442 0 0 | 1,56,691 11 9 | 1,75,133 11 9 |
| 12 " " VII (Central Avenue—Machuabazar Street to Beadon Street). | 3,00,000 | 1,75,578 10 8 | 2,13,715 12 0 | 3,89,294 6 8 |
| 13. " " VIIA (Central Avenue—Halliday Street Widening) | | 640 0 0 | 1,37,910 0 0 | 1,38,550 0 0 |
| 14. " " VIIB (Central Avenue—Colootola treet to Bowbazar Street). | | 651 0 0 | 55,335 0 0 | 55,986 0 0 |
| 15. " " VIIC (Central Avenue—Manioktala Spur). | | 35,400 0 0 | ... | 35,400 0 0 |
| 16 " " VII (Chitpur Spur) ... | | 83,500 0 0 | 5,550 0 0 | 89,050 0 0 |
| 17. " " VIII (Park Street Extension) | | 3,442 8 7 | 34,525 0 0 | 37,967 8 7 |
| 18. " " VIIIA (Outer Park Street) | | 29,790 0 0 | 45,721 8 8 | 75,511 8 8 |
| 19 " " XI (St James' Square) | | 7,800 0 0 | .. | 7,800 0 0 |
| 20. " " XII (Park Street Widening). | | 4,000 0 0 | 2,08 415 9 4 | 2,12,415 9 4 |
| 21. " " XIII (Marcus Square Extension). | | ... | 28 591 10 8 | 28,591 10 8 |
| Total ... | 3,00,000 | 4,18,799 3 3 | 13,02,802 11 4 | 17,21,601 14 7 |
| 2.—*Under Section 122 (c)*— | | | | |
| Sale of land— | | | | |
| 1. Scheme No. I (Surtibagan) ... | ... | 15,804 13 4 | 41,64,469 14 0 | 41,80,274 11 4 |
| 2. " " I (Alteration Surtibagan). | ... | 65,800 0 0 | 32,600 0 0 | 98,400 0 0 |
| 3 " " IA Ditto ... | ... | 25,110 0 0 | ... | 25,110 0 0 |
| 4 " " IB (Surtibagan) ... | ... | ... | 3,44,648 8 7 | 3,44,648 8 7 |
| 5. " " IC (Ismail Madan Lane) | ... | 1 17,749 5 4 | 4,01,993 6 11 | 5,19,742 12 [illegible] |
| 6. " " II (Shambazar Bridge Road). | | ... | 19,77,356 11 6 | 19,77,356 11 6 |
| 7 " " IIA (Cornwallis Street)... | ... | 6,500 0 0 | 88,346 14 10 | 94,846 14 10 |
| 8 " " III (Wards Institution Lane). | ... | ... | 2,04,466 13 5 | 2,04,466 13 [illegible] |
| 9. " " IV (Russa Road Widening). | ... | 2,40,012 15 0 | 18,71,168 13 8 | 21,11,181 12 [illegible] |
| Carried over ... | ... | 4,70,977 1 8 | 90,85,051 2 11 | 95,56,028 4 [illegible] |
| Carried over ... | 3,00,000 | 4,18,799 3 3 | 13,02,802 11 4 | 17,21,601 14 [illegible] |

**Capital Account (Income)**—*continued.*

| Receipts. | Budget for 1921-22 | Actuals for 1921-22 | Actuals to 31st March 1921 | Actuals to 31st March 1922 |
|---|---|---|---|---|
| | Rs | Rs A P | Rs. A P | Rs A P |
| Brought forward ... | 3,00,000 | 4,18,799 3 3 | 13,02,802 11 4 | 17,21,601 14 7 |
| *B —Under section 122 (c)*—contd | | | | |
| Sale of land—*contd* | | | | |
| Brought forward . | ... | 4,70,977 1 8 | 90,85,051 2 11 | 95,56,028 4 7 |
| 10. Scheme No IVA (Russa Road extension) | 20,00,000 | 5,70,632 3 3 | 6,29,462 3 0 | 12,00,094 6 3 |
| 11 " " V (Bhowanipore) .. | .. | 1,94,503 9 11 | 22,93 478 14 5 | 24 87,982 8 4 |
| 12 " " VII (Central Avenue—Machua Bazar Street to Beadon Street) | 20 09,000 | 8,12,800 0 0 | 11,41,488 10 8 | 19,54,288 10 8 |
| 13 " " VIIA (Central Avenue—Halliday Street Widening) | | 3,532 0 0 | 17 06,943 0 9 | 17,10,475 0 9 |
| 14 " " VIIB (Central Avenue—Colootola to Bowbazar) | | 175 0 0 | 21,36,987 4 2 | 21,37,162 4 2 |
| 15 " " VIIC (Manicktala Spur) | . | 9,471 0 0 | . | 9,471 0 0 |
| 16 " " VII (Chitpore Spur) . | 5,00,000 | 4,22,5 5 0 0 | 13 0 0 | 4,22,548 0 0 |
| 17 " " VIII (Park Street Extension) | | 11,445 0 0 | 25,870 0 0 | 37,315 0 0 |
| 18 " " VIIIA (Outer Park St) . | . | 1,02,525 6 8 | 28,048 5 4 | 1,30,573 12 0 |
| 19 " " IX (Old Post Office Street Widening) | | .. | 2,53,093 0 0 | 2,53,093 0 0 |
| 20 " " XII (Park Street Widening) | | 21,121 0 0 | 1,00,000 0 0 | 1,21,121 0 0 |
| 21 " " XIII (Marcus Square Extension) | . | . | 7,800 0 0 | 7,800 0 0 |
| Other Schemes .. ... . | 5,00,000 | ... | ... | .. |
| Total | 50,00,000 | 26,19,717 5 6 | 1,74,08,235 9 3 | 2,00,27,952 14 9 |
| Sale-proceeds of buildings— | | | | |
| 1 Scheme No I (Sutibagan) | | | 1,93,430 2 0 | 1,93,430 2 0 |
| 2 " " I (Alteration) " | | 2,000 0 0 | 16,450 0 0 | 18,450 0 0 |
| 3 " " IA " | | .. | 1,450 0 0 | 1,450 0 0 |
| 4 " " IA (Alteration " | | 6,800 0 0 | 6,450 0 0 | 13,250 0 0 |
| 5 " " IB " | | . | 26,035 0 0 | 26,035 0 0 |
| 6 " " IC (Ismail Madan Lane) | | 2,450 0 0 | 53,897 0 0 | 56,347 0 0 |
| 7. " " II (Shambazar Bridge Road) | | ... | 62,662 0 0 | 62 662 0 0 |
| 8 " " IIA (Cornwallis Street) | | | 2,997 0 0 | 2,997 0 0 |
| 9 " " III (Wards Institution Lane) | | .. | 3,516 0 0 | 3,516 0 0 |
| 10. " " IV (Russa Road Widening) | 1,00 000 | 225 0 0 | 1,07,275 0 0 | 1,07,500 0 0 |
| 11. " " IVA (Russa Road Extension) | | 2,060 0 0 | 1,28,853 8 0 | 1,30,913 8 0 |
| 12. " " V (Bhowanipur) ... | | 25 0 0 | 1,72,707 2 8 | 1,72,732 2 8 |
| 13 " " V (Alteration) ... | | .. | 50 0 0 | 50 0 0 |
| 14. " " VII (Central Avenue—Machua Bazar to Beadon Street) | | 21,375 0 0 | 3,97,533 6 0 | 4,18,908 6 0 |
| 15 " " VIIA (Central Avenue—Halliday Street Widening) | | ... | 79,314 0 0 | 79,314 0 0 |
| 16 " " VIIB (Central Avenue—Colootola to Bowbazar Street) | | ... | 1,69,998 6 0 | 1,69,998 6 0 |
| Carried over ... | 1,00,000 | 34,935 0 0 | 14,22,618 8 8 | 14,57,553 8 8 |
| Carried over ... | 53,00,000 | 30,38,516 8 9 | 1,87,11 0.38 4 7 | 2,17,49,554 13 4 |

**Capital Account—(Income)—*continued***

| Receipts | Budget for 1921-22 | Actuals for 1921-22 | Actuals to 31st March 1921 | Actuals to 31st March 1922. |
|---|---|---|---|---|
| | Rs. | Rs A. P | Rs A. P | Rs A. P |
| Brought forward | 53,00,000 | 30,38,516 8 9 | 1,87,11,038 4 7 | 2,17,49,554 13 4 |
| *B—Under Section 122 (c)—contd* | | | | |
| Sale-proceeds of buildings—*contd* | | | | |
| Brought forward ... | 1,00,000 | 34,935 0 0 | 14,22,618 8 8 | 14,57,553 8 8 |
| 17 Scheme No VIIC (Manicktala Spur) | | 81,625 0 0 | 9,135 0 0 | 90,760 0 0 |
| 18 " " VIID (Central Avenue—Bowbazar Street to Prinsep Street) | | 61,645 0 0 | .. | 61,645 0 0 |
| 19. " " VII (Chitpur Spur) ... | | 18,102 8 0 | 52,196 1 9 | 70,298 9 9 |
| 20 " " VIII (Park Street Extension) | | 38,815 0 0 | 1,07,600 8 0 | 1,46,415 8 0 |
| 21 " " VIIIA (Outer Park Street) | | 20,585 0 0 | 66,179 8 0 | 86,764 8 0 |
| 22. " " IX (Old Post Office Street Widening) | ... | . | 16,000 0 0 | 16,000 0 0 |
| 23. " " X (Ripon Street Triangle) | | .. | 2,250 0 0 | 2,250 0 0 |
| 24 " " XI (St James' Square) . | | 7,250 0 0 | 2,450 0 0 | 9,700 0 0 |
| 25. " " XII (Park Street Widening) | | . | 845 0 0 | 845 0 0 |
| 26 " " XIII (Marcus Square Extension). | | | 17,810 0 0 | 17,810 0 0 |
| 26. " " XIV (Shambazar Park).. | ... | 2,100 0 0 | 41,945 0 0 | 44,045 0 0 |
| 27. Excavation area ... | | | 10,752 0 0 | 10,752 0 0 |
| 28 Re-housing scheme at Karbala Tank Lane | . | .. | 650 0 0 | 650 0 0 |
| 29. Re-housing Scheme at Bow Street ... | . | 10,085 0 0 | 27,175 0 0 | 37,260 0 0 |
| 30 Burrabazar Open Space ... | ... | .. | 4,208 0 0 | 4,208 0 0 |
| 31. Street Alignment No 1 ... | . | ... | 275 0 0 | 275 0 0 |
| 32. " " " II ... | ... | 350 0 0 | .. | 350 0 0 |
| 33 Scheme " " XVA ... | . | 4,315 0 0 | ... | 4,315 0 0 |
| 34. " " " XVB ... | . | 3,582 0 0 | .. | 3,582 0 0 |
| 35 " " " XVC ... | ... | 350 0 0 | ... | 350 0 0 |
| 36 Street " " XVI .. | | 5,300 0 0 | 215 0 0 | 5,515 0 0 |
| 37 Manicktala Re-housing Bustee Site No 1 | .. | 1,400 0 0 | ... | 1,400 0 0 |
| 38. Cossipore-Chitpore Open Space ... | .. | 33,148 0 0 | ... | 33,148 0 0 |
| 39. Parkpara Re-housing .. | .. | 3,156 0 0 | ... | 3 156 0 0 |
| 40. Street Alignment No XX . | . | 10 0 0 | ... | 10 0 0 |
| 41 Store Yard ... | .. | ... | 65 0 0 | 65 0 0 |
| | 1,00,000 | 3,26,753 8 0 | 17,82,369 10 5 | 21,09,123 2 5 |
| *C—Under Section 122 (g)—* | | | | |
| Premia on leases— | | | | |
| Scheme No. I (Surtibagan) ... | .. | .. | 1,10,895 1 1 | 1,10,895 1 1 |
| " " II (Shambazar Bridge Road) .. | 500 | ... | 79,760 2 7 | 79,760 2 7 |
| " " III (Wards Institution Lane) | ... | .. | 834 0 0 | 834 0 0 |
| " " V (Bhowampur) .. | ... | ... | 4,735 1 9 | 4,735 1 9 |
| | 500 | ... | 1,96,224 5 5 | 1,96,224 5 5 |
| Carried over ... | 54,00,500 | 33,65,270 0 9 | 2,06,89,632 4 5 | 2,40,54,902 5 2 |

**Capital Account—(Income)—*concluded***

| Receipts | Budget for 1921-22 | Actuals for 1921-22 | Actuals to 31st March 1921 | Actuals to 31st March 1922 |
|---|---|---|---|---|
| | Rs | Rs A. P | Rs A P | Rs A P |
| Brought forward ... | 54,00,500 | 33,65,270 0 9 | 2,06,89,632 4 5 | 2,40,54,902 5 2 |
| *C Under Section 122 (g)*—contd. | | | | |
| Fees for footings— | | | | |
| Scheme No I (Sutibagan) .. | | 93 4 0 | 4,086 2 0 | 4,179 6 0 |
| " " IB " ... | | .. | 41 10 9 | 41 10 9 |
| " " IC (Ismail Madan Lane) | | 270 2 0 | 40 0 0 | 310 2 0 |
| " " IV (Russa Road Widening). | | .. | 212 8 0 | 212 8 0 |
| " " IVA (Russa Road Extension) | 500 | 46 4 0 | | 46 4 0 |
| " " V (Bhowanipur) ... | | 39 0 0 | 588 8 0 | 627 8 0 |
| " " VII (Central Avenue—Machuabazar to Beadon Street) | | 5,319 12 4 | 795 0 0 | 6,114 12 4 |
| " " VIIC (Maniktala Spur) .. | | 430 5 0 | . | 430 5 0 |
| " " XII (Park Street Widening). | | 525 0 0 | 100 0 0 | 625 0 0 |
| | 500 | 6,723 11 4 | 5,863 12 9 | 12,587 8 1 |
| *D Under Section 122 (e)*— | | | | |
| Sale of moveable property ... | ... | ... | 540 0 0 | 540 0 0 |
| " " old materials . | 500 | 4,236 2 6 | 1,064 4 9 | 5,300 7 3 |
| Excavation area—Sale of earth ... | 1,500 | 4,772 8 0 | . | 4,772 8 0 |
| | 2,000 | 9,008 10 6 | 1,604 4 9 | 10,612 15 3 |
| *E Under Section 122 (f)*— | | | | |
| Government grant ... | .. | ... | 50,00,000 0 0 | 50,00,000 0 0 |
| *F. Under Section 125 (a)*— | | | | |
| Debenture loan ... .. | ... | 33,00,000 0 0 | ... | 33,00,000 0 0 |
| Total .. | 54,03,000 | 66,81,002 6 7 | 2,56,97,100 5 11 | 3,23,78,102 12 6 |
| Transferred from Revenue Account .. | ... | 39,10,610 1 6 | 1,67,78,118 7 1 | 2,06,88,728 8 7 |
| GRAND TOTAL ... | ... | 1,05,91,612 8 1 | 4,24,75,218 13 0 | 5,30,66,831 5 1 |

## Capital Account—Statement of Income and Expenditure.

EXPENDITURE

| Expenditure | Budget for 1921-22 | Actuals for 1921-22 | Actuals to 31st March 1921 | Actuals to 31st March 1922 |
|---|---|---|---|---|
| | Rs | Rs A P | Rs. A P | Rs. A. P |
| *A Under Section 123 (a)*— | | | | |
| Scheme No. 1 (Surtibagan)— | | | | |
| Advertisement, etc .. .. | 100 | ... | 2,300 8 10 | 2,300 8 10 |
| Auctioneer's fees .. .. | 200 | ... | 27,684 11 0 | 27,684 11 0 |
| Street lighting . . | | 171 7 11 | 4,528 11 3 | 4,700 3 2 |
| " watering . . | . | 216 14 0 | 1,029 12 5 | 1,246 10 5 |
| Conservancy ... . | ... | 764 2 0 | 4,237 1 4 | 5,001 3 4 |
| Cost of survey ... ... | ... | 79 9 9 | 340 5 8 | 419 15 5 |
| Telephone to works ... ... | ... | .. | 275 0 0 | 275 0 0 |
| Stamp duty ... ... | .. | .. | 1,080 0 0 | 1,080 0 0 |
| Cost of acquiring land .. | ... | Cr 83,490 5 10 | 30,97,819 3 10 | 30,14,328 14 0 |
| Stores .. ... | 4,000 | ... | ... | .. |
| Adjustment of advances to Corporation | 1,100 | ... | .. | ... |
| Engineering works ... .. | 11,000 | ... | ... | .. |
| Road construction, drainage and sewerage | ... | 1,339 1 3 | 1,33,741 1 10 | 1,35,080 3 1 |
| Water works ... ... | ... | 1,468 10 1 | 39,973 1 1 | 41,441 11 2 |
| Gas supply ... .. | ... | 1,093 13 3 | 12,655 13 0 | 13,749 10 3 |
| Tree planting ... ... | ... | ... | 144 0 0 | 144 0 0 |
| Removal of surplus earth ... . | . | . | 4,033 7 3 | 4,033 7 3 |
| Shifting overhead tramway poles .. | .. | | 703 14 4 | 703 14 4 |
| Electric supply ... | . | .. | 2,388 11 8 | 2,388 11 8 |
| Contingencies . ... | .. | .. | 3,707 8 10 | 3,707 8 10 |
| | 16,400 | Cr 78,356 11 7 | 33,36,643 0 4 | 32,58,286 4 5 |
| Scheme No I (Alteration)— | | | | |
| Advertisement, etc ... | 100 | 28 10 6 | 182 8 0 | 211 2 6 |
| Auctioneer's fees ... ... | 100 | 80 0 0 | 636 0 0 | 716 0 0 |
| Cost of acquiring land . . | 11,000 | 164 6 10 | 4,84,140 12 7 | 4,84,305 3 5 |
| Engineering works— | | | | |
| Cost of survey .. ... | ... | ... | 12 14 9 | 12 14 9 |
| | 11,200 | 273 1 4 | 4,84,972 3 4 | 4,85,245 4 8 |
| Scheme No 1A (Surtibagan) — | | | | |
| Advertisement, etc. ... ... | ... | 12 4 3 | 184 4 6 | 196 8 9 |
| Auctioneer's fees ... ... | . | .. | 72 8 0 | 72 8 0 |
| Conservancy .. ... | ... | 7 3 0 | .. | 7 3 0 |
| Cost of survey ... ... | ... | ... | 9 11 5 | 9 11 5 |
| Cost of acquiring land ... ... | ... | ... | 8,710 2 7 | 8,710 2 7 |
| Stores ... ... | 5,000 | ... | ... | ... |
| Engineering works ... ... | 30,000 | ... | ... | .. |
| Earth excavation .. .. | ... | ... | 222 15 0 | 222 15 0 |
| Road construction .. ... | ... | 15,591 0 0 | ... | 15,591 0 0 |
| Contingencies ... .. | ... | 22 12 8 | ... | 22 12 8 |
| | 35,000 | 15,633 3 11 | 9,199 9 6 | 24,832 13 5 |
| Scheme No. 1A (Alteration)— | | | | |
| Advertisement, etc. ... ... | 100 | 7 15 3 | 166 14 6 | 174 13 9 |
| Auctioneer's fees ... .. | 100 | 272 0 0 | 266 0 0 | 538 0 0 |
| Cost of acquiring land ... ... | ... | 1,921 1 11 | 2,29,059 5 9 | 2,30,980 7 8 |
| | 200 | 2,201 1 2 | 2,29,492 4 3 | 2,31,693 5 5 |
| Carried over ... | 62,800 | Cr. 60,249 5 2 | 40,60,307 1 5 | 40,00,057 12 3 |

**Capital Account—(Expenditure)**—*continued.*

| Expenditure | Budget for 1921-22 | Actuals for 1921 22 | Actuals to 31st March 1921 | Actuals to 31st March 1922 |
|---|---|---|---|---|
| | Rs | Rs A P | Rs. A P | Rs A P |
| Brought forward ... | 62,800 | Cr 60,249 5 2 | 40,60,307 1 5 | 40,00,057 12 3 |
| Scheme No. IB (Sutibagan)— | | | | |
| Advertisement, etc .. .. | ... | ... | 415 7 5 | 415 7 5 |
| Auctioneer's fees ... . | .. | ... | 1,887 1 0 | 1,887 1 0 |
| Street lighting . | | | 49 11 8 | 49 11 8 |
| Maintenance .. ... . | . | ... | 13 9 3 | 13 9 3 |
| Cost of survey ... .. | | .. | 13 11 2 | 13 11 2 |
| ,, , acquiring land . | | | 3,16,635 3 1 | 3,16,635 3 1 |
| Engineering works— | | | | |
| Road construction, drainage and sewerage works. | . | ... | 9,256 10 1 | 9,256 10 1 |
| Water supply . ... | ... | .. | 1,825 5 0 | 1,825 5 0 |
| Gas supply ... | ... | . | 342 12 0 | 342 12 0 |
| Removal of surplus earth .. | .. | ... | 956 2 6 | 956 2 6 |
| Contingencies .. . | .. | . | 114 5 9 | 114 5 9 |
| | . | .. | 3,31,509 14 11 | 3,31,509 14 11 |
| Scheme No 1C (Ismail Madan Lane)— | | | | |
| Advertisement, etc .. | 500 | 251 5 11 | 374 2 1 | 625 8 0 |
| Auctioneer's fees ... | 2,000 | 872 13 0 | 1,916 3 3 | 2,789 0 3 |
| Street lighting . | .. | 416 10 2 | 246 13 7 | 663 7 9 |
| ,, watering ... .. | ... | ... | 26 9 6 | 26 9 6 |
| Conservancy ... .. .. | ... | . | 61 15 4 | 61 15 4 |
| Cost of survey ... ... . | .. | 39 2 0 | 16 0 8 | 55 2 8 |
| Telephone .. ... | .. | .. | 25 0 0 | 25 0 0 |
| Cost of acquiring land ... | 5,000 | 19,788 4 1 | 7,31,709 0 8 | 7,51,497 4 9 |
| Engineering works ... .. | 10,000 | . | ... | ... |
| Road construction, drainage and sewerage | ... | Cr 4 6 0 | 28,361 15 11 | 28,357 9 11 |
| Water supply ... .. | .. | 1,676 12 9 | 9,215 9 0 | 10,892 5 9 |
| Gas supply ... ... | ... | 1,041 10 7 | 133 10 2 | 1,175 4 9 |
| Contingencies ... ... .. | ... | ... | 2 6 0 | 2 6 0 |
| Shifting electric supply cables | ... | ... | 4,692 4 4 | 4,692 4 4 |
| Stores .. ... . | 5,000 | .. | ... | ... |
| Adjustment of advances to Corporation | 3,000 | ... | ... | ... |
| | 25,500 | 24,082 4 6 | 7,76,781 10 6 | 8,00,863 15 0 |
| Scheme No 11 (Shambazar Bridge Road)— | | | | |
| Advertisement, etc .. | .. | . | 1,964 15 9 | 1,964 15 9 |
| Auctioneer's fees . .. | .. | | 10,762 4 3 | 10,762 4 3 |
| Street lighting . .. | .. | | 2,260 0 6 | 2,260 0 6 |
| General maintenance .. | .. | ... | 167 7 6 | 167 7 6 |
| Cost of survey .. . | ... | | 1,290 6 3 | 1,290 6 3 |
| Telephone ... .. ... | | ... | 200 0 0 | 200 0 0 |
| Cost of acquiring land ... | ... | 87,619 13 9 | 11,07,968 9 7 | 11,95,588 7 4 |
| Engineering works— | | | | |
| Earth-filling ... ... ... | . | ... | 47,053 5 9 | 47,053 5 9 |
| Road construction, drainage and sewerage. | . | Cr 2 13 0 | 1,30,529 7 6 | 1,30,526 10 6 |
| Gas supply ... ... ... | ... | ... | 13,529 4 11 | 13,529 4 11 |
| Water supply ... ... ... | ... | ... | 47,156 5 3 | 47,156 5 3 |
| Tree planting ... ... ... | ... | .. | 368 0 0 | 368 0 0 |
| Tramway ... ... ... | ... | ... | 27,094 1 1 | 27,094 1 1 |
| Alteration to electric supply cables ... | .. | ... | 2,480 10 7 | 2,480 10 7 |
| Contingencies ... ... | ... | ... | 1,574 1 2 | 1,574 1 2 |
| | ... | 87,617 0 9 | 13,94,399 0 1 | 14,82,016 0 10 |
| Carried over ... | 88,300 | 51,450 0 1 | 65,62,997 10 11 | 66,14,447 11 0 |

**Capital Account—(Expenditure)—*continued.***

| Expenditure | Budget for 1921-22 | Actuals for 1921-22 | Actuals to 31st March 1921 | Actuals to 31st March 1922. |
|---|---|---|---|---|
| | Rs | Rs A. P | Rs A P | Rs A P |
| Brought forward | 88,300 | 51,450 0 1 | 65,62,997 10 11 | 66,14,447 11 0 |
| Scheme No IIA (Cornwallis Street)— | | | | |
| Advertisement, etc. ... | ... | 12 7 6 | 283 1 2 | 295 8 8 |
| Auctioneer's fees | . | . | 91 1 7 | 91 1 7 |
| Street lighting .. ... | | | 288 12 0 | 288 12 0 |
| Cost of survey ... .. . | ... | . | 4 0 0 | 4 0 0 |
| " " acquiring land | ... | .. | 1,09,373 6 6 | 1,09,373 6 6 |
| Engineering works— | | | | |
| Road construction, drainage and sewerage works | | | 13,548 13 10 | 13,548 13 10 |
| Water supply .. ... | .. | | 1,402 11 10 | 1,402 11 10 |
| Tree planting ... . . | .. | . | 88 0 0 | 88 0 0 |
| Gas supply ... .. | . | . | 269 6 11 | 269 6 11 |
| Shifting electric posts . | . | . | 764 4 0 | 764 4 0 |
| " telegraph posts . | | | 399 7 0 | 399 7 0 |
| Contingencies ... ... | ... | | 495 12 10 | 495 12 10 |
| | | 12 7 6 | 1,27,008 13 8 | 1,27,021 5 2 |
| Scheme No III (Wards Institution Lane)— | | | | |
| Advertisements, etc ... ... | . | | 319 14 9 | 319 14 9 |
| Auctioneer's fees .. | ... | ... | 695 15 9 | 695 15 9 |
| Street lighting .. .. | ... | . | 907 11 9 | 907 11 9 |
| Conservancy . .. . | . | ... | 58 10 8 | 58 10 8 |
| General maintenance . . | | ... | 91 14 6 | 91 14 6 |
| Cost of survey ... ... ... | .. | .. | 14 14 6 | 14 14 6 |
| Cost of acquiring land | ... | 20 0 0 | 1,33,069 3 1 | 1,33,089 3 1 |
| Engineering works— | | | | |
| Water supply ... | . | .. | 13,369 9 5 | 13,369 9 5 |
| Road construction, drainage and Sewerage | | | 39,102 10 5 | 39,102 10 5 |
| Earth-filling ... ... .. | ... | .. | 3,631 10 3 | 3,631 10 3 |
| Tree planting ... ... ... | ... | .. | 72 0 0 | 72 0 0 |
| Gas supply ... .. ... | .. | . | 2,980 7 10 | 2,980 7 10 |
| Contingencies ... .. ... | ... | . | 162 7 7 | 162 7 7 |
| | .. | 20 0 0 | 1,94,477 2 6 | 1,94,497 2 6 |
| Scheme No IV (Russa Road Widening)— | | | | |
| Advertising, etc ... .. | 1,000 | 141 11 5 | 3,139 3 6 | 3,280 14 11 |
| Auctioneer's fees .. ... | 2,000 | ... | 10,887 9 4 | 10,887 9 4 |
| Street lighting ... .. . | ... | 586 10 2 | 9,574 6 1 | 10,161 0 3 |
| " watering ... ... ... | .. | 81 13 0 | 4,959 5 6 | 5,041 2 6 |
| Conservancy ... ... .. | . | 188 1 10 | 12,355 8 0 | 12,543 9 10 |
| Maintenance ... .. ... | .. | ... | 545 15 10 | 545 15 10 |
| Cost of acquiring land .. ... | 4,500 | 1,225 2 11 | 17,50,140 13 3 | 17,51,366 0 2 |
| Stores ... ... ... | 2,000 | ... | ... | ... |
| Cost of survey ... ... ... | .. | 52 13 0 | 475 13 7 | 528 10 7 |
| Telephone ... ... ... | .. | ... | 746 9 3 | 746 9 3 |
| Adjustment of advances to Corporation ... | 35,000 | ... | ... | ... |
| Engineering works— | 68,000 | .. | ... | ... |
| Hazra Square ... ... . | ... | 6,158 2 9 | 4,264 2 6 | 10,422 5 3 |
| Road construction, drainage and sewerage. | ... | 60,349 13 0 | 2,67,113 0 2 | 3,27,462 13 2 |
| Carried over ... | 1,12,500 | 68,784 4 1 | 20,64,202 7 0 | 21,32,986 11 1 |
| Carried over ... | 88,300 | 51,482 7 7 | 68,84,485 11 1 | 69,35,966 2 8 |

**Capital Account—(Expenditure)**—*continued*

| Expenditure | Budget for 1921-22 | Actuals for 1921-22 | Actuals to 31st March 1921 | Actuals to 31st March 1922 |
|---|---|---|---|---|
| | Rs | Rs A P | Rs A P | Rs A P |
| Brought forward | 88,300 | 51,482 7 7 | 68,84,483 11 1 | 69,35,966 2 8 |
| Scheme No IV (Russa Road Widening—*contd.* | | | | |
| Brought forward | 1,12,500 | 68,784 4 1 | 20,64,202 7 0 | 21,32,986 11 1 |
| Tank-filling ... | | 30,158 10 0 | 90,856 7 9 | 1,21,015 1 9 |
| Water supply .. . | | 30,919 3 3 | 66,541 6 0 | 97,460 9 3 |
| Gas supply . | . | 420 12 8 | 20,241 11 7 | 20,662 8 3 |
| Tramway .. ... | .. | 6,475 11 2 | 79,292 5 9 | 85,768 0 11 |
| Tree planting ... | | | 592 0 0 | 592 0 0 |
| Taking up and relaying electric supply cables, etc | . | 3,054 3 7 | 34,209 13 1 | 37,264 0 8 |
| Construction of mali's house and urinal at Hazra Square | . | | 18,276 1 9 | 18,276 1 9 |
| Contingencies | .. | 597 13 6 | 6,454 11 11 | 7,052 9 5 |
| D N Mitter Square | | 2,793 14 6 | 10,064 3 0 | 12,858 1 6 |
| | 1,12,500 | 1,43,204 8 9 | 23,90,731 3 10 | 25,33,935 12 7 |
| Scheme No. IVA (Russa Road Extension)— | | | | |
| Advertisement, etc ... | 1,000 | 922 6 5 | 1,009 8 4 | 1,931 14 9 |
| Auctioneer's fees . . | 3,000 | 362 7 4 | 3,860 2 5 | 4,222 9 9 |
| Street lighting .. . | | 3,432 8 5 | 2,562 6 10 | 5,994 15 3 |
| „ watering ... ... | .. | 1,104 6 0 | 566 10 11 | 1,671 0 11 |
| Conservancy . | .. | 3,050 8 6 | 2,746 7 4 | 5,796 15 10 |
| Cost of survey | .. | 382 8 11 | 1,067 5 6 | 1,449 14 5 |
| Telephone | .. | 200 0 0 | 25 0 0 | 225 0 0 |
| Cost of acquiring land ... | 90,000 | 1,30,361 3 8 | 28,67,428 12 1 | 29,97,789 15 9 |
| Engineering work .. . | 2,60,000 | ... | ... | . |
| Road construction, drainage and sewerage | .. | 3,20,083 10 10 | 3,68,825 0 5 | 6,88,908 11 3 |
| Gas lighting .. | . . | 938 8 10 | 2,090 2 4 | 3,088 11 2 |
| Tree planting . . . | .. | ... | 30 0 0 | 80 0 0 |
| Water supply ... ... | . | 1,27,613 5 6 | 1,43,312 1 11 | 2,70,925 7 5 |
| Cost of urinal ... ... | | ... | 600 0 0 | 600 0 0 |
| Tank filling . . | | 55,805 0 9 | 3,25,928 9 3 | 3,81,733 10 0 |
| Taking up and relaying electric cables ... | | 209 1 2 | 2,554 9 0 | 2,763 10 2 |
| Excavating and carting away earth, etc | . | | 5,971 9 6 | 5,971 9 6 |
| Taking up and relaying telephone poles | | | 150 0 0 | 150 0 0 |
| Contingencies .. | . | 3,294 9 5 | 14,410 13 3 | 17,705 6 8 |
| Tramways ... ... | . . | 40,732 12 7 | | 40,732 12 7 |
| Stores . . ... | 1,40,000 | ... | . | ... |
| Adjustment of advances to Corporation ... | 7,000 | | . . | . . |
| | 5,01,000 | 6,88,553 2 4 | 37,43,139 3 7 | 44,31,692 5 5 |
| Scheme No V (Bhowanipur)— | | | | |
| Advertisement, etc ... .. | 200 | 249 13 7 | 4,389 9 3 | 4,639 6 10 |
| Auctioneer's fees . . | 100 | .. | 7,260 2 7 | 7,260 2 7 |
| Street lighting . ... | . | 3,039 7 3 | 19,367 6 3 | 22,406 13 6 |
| „ watering ... ... | .. | 859 1 6 | 4,986 14 7 | 5,846 0 1 |
| Conservancy ... ... | .. | 2,367 5 10 | 16,222 0 6 | 18,589 6 4 |
| Maintenance ... ... | ... | 450 12 9 | 780 13 3 | 1,231 10 0 |
| Cost of survey ... .. | ... | 248 10 7 | 4,527 1 7 | 4,775 12 2 |
| Carried over ... | 300 | 7,215 3 6 | 57,534 0 0 | 64,749 3 6 |
| Carried over ... | 7,01,800 | 8,83,[illegible] 2 8 | 1,30,18,354 2 0 | 1,39,01,594 4 8 |

**Capital Account—(Expenditure)—*continued.***

| Expenditure. | Budget for 1921-22 | Actuals for 1921-22. | Actuals to 31st March 1921. | Actuals to 31st March 1922. |
|---|---|---|---|---|
| | Rs | Rs A P | Rs. A P | Rs A P |
| Brought forward .. | 7,01,800 | 8,83,240 2 8 | 1,30,18,354 2 0 | 1,39,01,594 4 8 |
| Scheme No V (Bhowanipur)—*contd* | | | | |
| Brought forward ... | 300 | 7,215 3 6 | 57,534 0 0 | 64,749 3 6 |
| Maps ... ... ... | | . | 750 0 0 | 750 0 0 |
| Telephone . ... . | | .. | 1,120 4 0 | 1,120 4 0 |
| Cost of acquiring land .. | 5,000 | 234 1 7 | 28,33,195 8 7 | 28,33,429 10 2 |
| Engineering works . . | 17,000 | ... | .. | ... |
| Road Construction, drainage and sewerage | ... | 63,185 13 4 | 9,40,448 6 1 | 10,03,634 3 5 |
| Water supply ... ... | .. | 54,591 5 11 | 2,77,290 10 10 | 3,31,882 0 9 |
| Tank-filling ... . | .. | 6,487 15 0 | 3,80,759 8 3 | 3,87,247 7 3 |
| Gas supply . ... | .. | 1,815 2 0 | 16,685 10 3 | 18,500 12 3 |
| Tree planting ... | ... | ... | 2,930 4 10 | 2,930 4 10 |
| Shifting electric cables and pole .. | | ... | 1,290 1 3 | 1,290 1 3 |
| Park construction .. | | 2,498 15 6 | 29,261 4 6 | 31,760 4 0 |
| Taking up and relaying telephone poles | | | 3,195 1 2 | 3,195 1 2 |
| Earth removal ... ... | | ... | 2,692 15 6 | 2,692 15 6 |
| Construction of mali's house ... | ... | .. | 5,835 8 0 | 5,835 8 0 |
| Contingencies . . | . | 1,632 15 3 | 17,040 5 10 | 18,673 5 1 |
| Stores ... ... ... | 8,000 | ... | ... | . |
| Adjustment of advances to corporation . | 90,000 | | ... | .. |
| | 1,20,300 | 1,37,661 8 1 | 45,70,029 9 1 | 47,07,691 1 2 |
| Scheme No. V (Alteration)— | | | | |
| Advertisement, etc ... .. | .. | ... | 78 0 0 | 78 0 0 |
| Auctioneer's fees . . | ... | .. | 2 0 0 | 2 0 0 |
| Cost of acquiring land . | ... | ... | 19,374 7 6 | 19,374 7 6 |
| | ... | ... | 19,454 7 6 | 19,454 7 6 |
| Scheme No VI (Chinabazar)— | | | | |
| Advertisement, etc ... | .. | ... | 1,798 12 6 | 1,798 12 6 |
| Scheme No. VII—(Central Avenue—Machua bazar Street to Beadon Street)— | | | | |
| Advertisement, etc ... ... | 1,000 | 428 3 7 | 1,422 8 2 | 1,850 11 9 |
| Auctioneer's fees ... .. | 10,000 | 1,329 4 0 | 15,605 5 4 | 16,934 9 4 |
| Street lighting ... .. | . | 6,757 9 4 | 5,771 6 0 | 12,528 15 4 |
| Conservancy ... ... | ... | 1,070 3 0 | 2,820 11 0 | 3,890 14 0 |
| Street watering .. ... | .. | 93 0 3 | 415 13 1 | 508 13 4 |
| Cost of survey . ... | | 402 6 4 | 612 6 11 | 1,014 13 3 |
| Telephone .. .. | ... | 200 0 0 | 275 0 0 | 475 0 0 |
| Cost of acquiring land ... ... | 20,000 | 79,731 2 4 | 10,30,469 3 8 | 44,10,200 6 0 |
| Adjustment of advances to corporation | 20,000 | ... | .. | ... |
| Stores ... ... ... | 33,000 | ... | ... | ... |
| Engineering works ... ... | 1,17,000 | ... | ... | ... |
| Road construction, drainage and sewerage. | ... | 89,267 7 5 | 3,01,324 8 8 | 3,90,592 0 1 |
| Gas lighting ... ... .. | | 610 1 0 | 12,820 0 1 | 13,430 1 1 |
| Water supply ... ... ... | ... | 1,49,296 7 11 | 1,83,902 6 6 | 3,33,198 14 5 |
| Earth removal ... .. | ... | 3,327 9 9 | 32 0 0 | 3,359 9 9 |
| Shifting electric cables, etc ... | ... | 160 2 5 | 3,451 2 10 | 3,581 5 3 |
| Contingencies ... ... | ... | 977 0 7 | 3,652 8 0 | 4,629 8 7 |
| | 2,01,000 | 3,33,620 9 11 | 45,62,575 0 3 | 48,96,195 10 2 |
| Carried over ... | 10,[illegible]100 | 13,54,522 4 8 | 2,21,72,214 15 4 | 2,35,26,734 4 0 |

**Capital Account—(Expenditure)**—*continued.*

| Expenditure | Budget for 1921-22 | Actuals for 1921-23. | Actuals to 31st March 1921 | Actuals to 31st March 1922 |
|---|---|---|---|---|
| | Rs | Rs A P | Rs A P | Rs A P |
| Brought forward .. | 10,23,100 | 13,54,522 4 8 | 2,21,72,211 15 4 | 2,35,26,734 4 0 |
| Scheme No VII (Chitpur Spur)— | | | | |
| Advertisement, etc | 1,000 | 28 14 3 | | 28 14 3 |
| Auctioneer's fees ... | 3,000 | 464 0 0 | 2,137 10 10 | 2,621 10 10 |
| Street lighting ... ... | . | 141 10 10 | 92 0 0 | 233 10 10 |
| Conservancy ... | | 17 14 0 | . | 17 14 0 |
| Cost of survey . | | 69 9 7 | 8 13 7 | 78 7 2 |
| Cost of acquiring land ... .. | 40,000 | 63,834 5 6 | 20,90,792 0 4 | 21,54,626 5 10 |
| Stores ... . .. | 20,000 | | .. | . |
| Engineering works ... . | 55,000 | . | | |
| Road construction, drainage and sewerage | . | 32,662 6 0 | | 32,662 6 0 |
| Tank filling . .. | .. | 2,210 12 3 | | 2,210 12 3 |
| Contingencies . ... | | 97 4 3 | | 97 4 3 |
| Water works . | . | 184 8 6 | | 184 8 6 |
| Earth removal | | 37,197 13 6 | ... | 37,197 13 6 |
| | 1,19,000 | 1,36,909 2 8 | 20,93,050 8 9 | 22,29,959 11 5 |
| Scheme No. VIIA (Central Avenue—Halliday Street Widening)— | | | | |
| Advertisement, etc .. | | | 1,059 15 6 | 1,059 15 6 |
| Auctioneer's fees ... . | | | 7,386 12 0 | 7,386 12 0 |
| Street lighting .. .. | | 108 2 0 | 4,248 13 0 | 4,356 15 0 |
| ,, watering | .. | . | 1,454 2 2 | 1,454 2 2 |
| Conservancy . | .. | | 3,474 10 7 | 3,474 10 7 |
| Maintenance . | | . | 6 1 6 | 6 1 6 |
| Cost of survey .. . | .. | 74 13 4 | 48 4 2 | 123 1 6 |
| Telephone | . | .. | 225 0 0 | 225 0 0 |
| Cost of acquiring land . . | | 21 0 0 | 16,98,082 3 11 | 16,98,103 3 11 |
| Engineering works . ... | 7,000 | | . | .. |
| Road construction, drainage and sewerage | . | 2,880 14 0 | 1,13,315 6 4 | 1,16,196 4 4 |
| Water supply .. | .. | Cr. 58 0 8 | 36,132 12 6 | 36,074 11 10 |
| Tree planting . ... | .. | .. | 206 4 0 | 206 4 0 |
| Taking up and relaying existing electric supply cables. | .. | | 1,691 10 7 | 1,691 10 7 |
| Alteration to reservoir (Halliday Street) | . | . | 3,709 15 9 | 3,709 15 9 |
| Taking up and removing sewered ditch | . | .. | 335 13 9 | 335 13 9 |
| Gas supply ... .. | ... | 375 6 3 | 4,690 9 1 | 5,065 15 4 |
| Contingencies ... .. | ... | ... | 2,864 14 6 | 2,864 14 6 |
| Stores ... ... | 3,000 | ... | ... | ... |
| Adjustment of advances to Corporation | 12,000 | | ... | ... |
| | 22,000 | 3,402 2 11 | 18,78,933 5 4 | 18,82,335 8 3 |
| Scheme No VIIB (Central Avenue—Colootola to Bowbazar Street)— | | | | |
| Advertisement, etc . .. | | 3 9 0 | 1,536 7 6 | 1,540 0 6 |
| Auctioneer's fees ... . | .. | | 12,368 9 7 | 12,368 9 7 |
| Street lighting . ... | .. | 382 9 3 | 4,613 13 9 | 4,996 7 0 |
| ,, watering ... ... | ... | ... | 1,430 9 2 | 1,430 9 2 |
| Conservancy .. ... | ... | 61 4 0 | 3,855 15 5 | 3,917 3 5 |
| Cost of survey .. ... | ... | 186 6 8 | 79 15 6 | 266 6 2 |
| Telephone ... ... | ... | .. | 225 0 0 | 225 0 0 |
| Maintenance ... ... | ... | ... | 40 5 6 | 40 5 6 |
| Cost of acquiring land ... ... | ... | Cr. 1,001 9 8 | 21,76,258 10 8 | 21,75,257 1 0 |
| Carried over ... | ... | Cr. 367 12 9 | 22,00,409 7 1 | 22,00,041 10 4 |
| Carried over ... | 11,64,100 | 14,94,853 10 3 | 2,61,44,195 13 5 | 2,76,39,029 7 8 |

**Capital Account—(Expenditure)**—*continued.*

| Expenditure. | Budget for 1921-22. | Actuals for 1921-22 | Actuals to 31st March 1921 | Actuals to 31st March 1922 |
|---|---|---|---|---|
| | Rs | Rs. A P. | Rs A P | Rs. A. P |
| Brought forward .. | 11,64,100 | 14,94,833 10 3 | 2,61,44,195 13 5 | 2,76,39,029 7 8 |
| Scheme No VIIB (Central Avenue—Colootola to Bowbazar Street)—*contd* | | | | |
| Brought forward .. | . | Cr 367 12 0 | 22,00,409 7 1 | 22,00,041 10 4 |
| Adjustment of advances to Corporation | 11,500 | ... | ... | . |
| Stores ... .. . | 3,000 | . | ... | ... |
| Engineering works ... ... | 7,000 | .. | ... | ... |
| Road construction, drainage and sewerage. | ... | 7,635 3 4 | 1,38,740 5 2 | 1,46,375 8 6 |
| Water supply ... ... | ... | 9,682 5 0 | 33,743 15 7 | 43,426 4 7 |
| Gas supply ... ... ... | . | 394 4 1 | 9,945 11 9 | 10,339 15 10 |
| Tree planting ... ... | ... | .. | 320 0 0 | 320 0 0 |
| Removal of surplus earth ... | | ... | 4,632 14 3 | 4,632 14 3 |
| Relaying electric cables, etc .. | . | .. | 2,394 6 3 | 2,394 6 3 |
| Contingencies .. ... | .. | ... | 3,216 4 3 | 3,216 4 3 |
| | 21,500 | 17,343 15 8 | 23,93,403 0 4 | 24,10,747 0 0 |
| Scheme No VIIC (Central Avenue—Maniktola Spur)— | | | | |
| Advertisement .. | 500 | ... | 681 2 1 | 681 2 1 |
| Auctioneer's fees . | ... | 2,834 9 7 | 186 0 0 | 3,020 9 7 |
| Cost of survey ... | ... | 27 4 9 | | 27 4 9 |
| Cost of acquiring land ... .. | 20,00,000 | 8,37,044 12 4 | 14,65,513 13 11 | 23,02,558 10 3 |
| | 20,00,500 | 8,39,906 10 8 | 14,66,381 0 0 | 23,06,287 10 8 |
| Scheme No VIID (Central Avenue—Bowbazar Street to Prinsep Street)— | | | | |
| Advertisement, etc .. ... | .. | | 533 3 0 | 533 3 0 |
| Auctioneer's fees ... ... | | 2,145 12 8 | . | 2,145 12 8 |
| Cost of acquiring land . ... | 10,00,000 | 1,82,759 9 1 | 17,36,176 8 4 | 19,18,936 1 5 |
| Engineering works— | | | | |
| Gas lighting ... ... | ... | 51 6 10 | .. | 51 6 10 |
| Earth removal ... ... | ... | 299 4 0 | .. | 299 4 0 |
| Telephone . ... | ... | 25 0 0 | .. | 25 0 0 |
| | 10,00,000 | 1,85,281 0 7 | 17,36,709 11 4 | 19,21,990 11 11 |
| Scheme No. VIIE (Central Avenue—Prinsep Street to Chowringhee)— | | | | |
| Advertisement, etc ... ... | ... | .. | 1,171 14 3 | 1,371 14 3 |
| Cost of survey .. ... | ... | ... | 81 15 4 | 81 15 4 |
| Cost of acquiring land ... | ... | 2,06,408 13 3 | .. | 2,06,408 13 3 |
| | ... | 2,06,408 13 3 | 1,453 13 7 | 2,07,862 10 10 |
| Scheme No. VIII (Park Street Extension)— | | | | |
| Advertisement, etc ... ... | 200 | 73 1 3 | 675 12 2 | 748 13 5 |
| Auctioneer's fees ... ... | .. | 1,503 9 7 | 3,537 15 7 | 5,041 9 2 |
| Cost of survey ... ... | ... | 13 9 4 | 464 0 2 | 477 9 6 |
| Telephone ... ... | ... | 250 0 0 | 54 7 3 | 304 7 3 |
| Street lighting ... ... | ... | 532 9 2 | 109 15 5 | 942 8 7 |
| " watering ... ... | ... | 26 5 11 | ... | 26 5 11 |
| Carried over ... | 200 | 2,699 3 3 | 4,842 2 7 | 7,541 5 10 |
| Carried over .. | 41,86,100 | 27,48,774 2 5 | 3,17,42,148 6 8 | 3,44,85,917 9 1 |

**Capital Account—(Expenditure)—*continued***

| Expenditure | Budget for 1921-22. | Actuals for 1921-22 | Actuals to 31st March 1921 | Actuals to 31st March 1922 |
|---|---|---|---|---|
| | Rs | Rs A P | Rs. A P | Rs A P |
| Brought forward .. | 41,86,100 | 27,43,774 2 5 | 3,17,42,143 6 8 | 3,44,85,917 9 1 |
| Scheme No VIII—(Park Street Extension)—*contd* | | | | |
| Brought forward .. | 200 | 2,699 3 3 | 4,842 2 7 | 7,541 5 10 |
| Conservancy ... .. . | .. | 59 4 1 | .. | 59 4 1 |
| Cost of acquiring land .. .. | 30,000 | 48,700 15 7 | 27,33,042 0 10 | 27,81,743 0 5 |
| Stores ... .. . | 45,000 | .. | ... | . |
| Engineering works . .. | 2,55,000 | .. | | ... |
| Road construction, drainage and sewerage | . | 2,95,167 10 1 | 36,833 15 0 | 3,32,001 9 1 |
| Gas lighting ... . ... | .. | 1,005 1 1 | 6 0 0 | 1,011 1 1 |
| Water works ... ... . | .. | 79 867 14 9 | 8 6 10 | 79,876 5 7 |
| Taking up and relaying electric cables .. | ... | 2,688 5 8 | | 2,688 5 8 |
| Taking filling .. . . | . | Cr 3,000 0 0 | 71,738 2 6 | 68,738 2 6 |
| Gas supply | . | . | 84 12 3 | 84 12 3 |
| Carriage of materials . .. | | 2 0 0 | . | 2 0 0 |
| Contingencies .. ... .. | ... | 2,851 5 5 | 667 8 6 | 3,518 13 11 |
| | 3,30,200 | 4,30,041 11 11 | 28,47,223 0 6 | 32,77,264 12 5 |
| Scheme No VIIIA—(Outer Park Street)— | | | | |
| Advertisement, etc . | 500 | 99 6 3 | 558 7 0 | 657 13 3 |
| Auctioneer's fees . . | . | 470 6 6 | 1,714 8 8 | 2,184 15 2 |
| Street lighting .. . | | 106 8 0 | 16 10 8 | 123 2 8 |
| Cost of survey ... | . | 4 4 1 | 230 2 5 | 234 6 6 |
| Conservancy . | | 2 0 0 | .. | 2 0 0 |
| Cost of acquiring land .. | 2,00,000 | 3,70,459 15 4 | 11,46,167 10 4 | 15,16,627 9 8 |
| Stores . | 20,000 | ... | .. | .. |
| Engineering works ... | 55,000 | ... | | . |
| Tank filling . | . | ... | 9,200 0 0 | 9,200 0 0 |
| Road construction, drainage, etc . | ... | 10,037 6 0 | .. | 10,037 6 0 |
| Taking up and relaying telegraph poles. | .. | 16 4 6 | .. | 16 4 6 |
| Public convenience ... | . | 111 12 0 | .. | 111 12 0 |
| Contingencies . | | 310 13 9 | | 310 13 0 |
| | 2,75,500 | 3,81,618 12 5 | 11,57,887 7 1 | 15,39,506 3 6 |
| Scheme No VIIIB— | | | | |
| Preliminary expenses . | ... | 289 4 0 | . | 289 4 0 |
| Cost of survey .. | ... | 4 3 11 | ... | 4 3 11 |
| | ... | 293 7 11 | | 293 7 11 |
| Scheme No. IX (Old Post Office Street Widening)— | | | | |
| Advertisement, etc ... | ... | ... | 183 12 0 | 183 12 0 |
| Auctioneer's fees .. | .. | . | 2,065 7 3 | 2,065 7 3 |
| Street lighting ... | . | ... | 32 0 2 | 32 0 2 |
| Cost of survey ... | ... | .. | 3 13 8 | 3 13 8 |
| Cost of acquiring land .. | ... | ... | 2,60,400 3 7 | 2,60,400 3 7 |
| Engineering works— | | | | |
| Road construction, drainage and sewerage | ... | ... | 2,570 15 1 | 2,570 15 1 |
| Contingencies ... | ... | ... | 4 7 8 | 4 7 8 |
| | ... | ... | 2,65 260 11 5 | 2,65,260 11 5 |
| Carried over ... | 47,91,800 | 35,55,728 2 8 | 3,60,12,514 9 8 | 3,95,68,242 12 4 |

**Capital Account—(Expenditure)—continued.**

| Expenditure | Budget for 1921-22. | Actuals for 1921-22. | Actuals to 31st March 1921 | Actuals to 31st March 1922. |
|---|---|---|---|---|
| | Rs | Rs A P | Rs. A P | Rs. A. P |
| Brought forward | 47,91,800 | 35,55,728 2 8 | 3,60,12,514 9 8 | 3,95,68,242 12 4 |
| Scheme No X (Ripon Street Triangle)— | | | | |
| Advertisement, etc .. | | .. | 186 4 6 | 186 4 6 |
| Auctioneer's fees . | ... | | 36 0 0 | 36 0 0 |
| Street lighting .. | ... | 45 13 10 | 158 15 6 | 204 13 4 |
| Cost of survey ... .. | | . | 4 7 6 | 4 7 6 |
| " " acquiring land . | . | 36 0 0 | 46,973 5 6 | 47,009 5 6 |
| Engineering works— | | | | |
| Road construction, drainage and sewerage works | . | | 11,016 14 7 | 11,016 14 7 |
| Water works .. | ... | | 2,386 9 10 | 2,386 9 10 |
| Gas lighting ... . ... | ... | ... | 121 3 6 | 121 3 6 |
| Tramway ... . | | . | 73 9 6 | 73 9 6 |
| Contingencies .. . | . | | 1 3 0 | 1 3 0 |
| Tree planting .. .. | .. | ... | 24 0 0 | 24 0 0 |
| | .. | 81 13 10 | 60,982 9 5 | 61,064 7 3 |
| Scheme No XI (St James' Square)— | | | | |
| Advertisement, etc .. | 200 | 6 12 0 | 228 6 0 | 235 2 0 |
| Auctioneer's fees | | 286 0 0 | 98 0 0 | 384 0 0 |
| Cost of survey . .. | | | 2 9 4 | 2 9 4 |
| Conservancy .. .. ... | ... | 163 6 3 | . | 163 6 3 |
| Street watering . .. | ... | 36 3 4 | ... | 36 3 4 |
| Cost of acquiring land ... | 70,000 | 36,835 1 6 | 4,78,938 2 5 | 5,15,773 3 11 |
| Stores ... ... | 10,000 | ... | .. | .. |
| Engineering works .. | 40,000 | . | ... | ... |
| Road construction, etc .. | .. | 4,034 14 9 | . | 4,034 14 9 |
| | 1,20,200 | 41,362 5 10 | 4,79,267 1 9 | 5,20,629 7 7 |
| Scheme No. XII (Park Street Widening)— | | | | |
| Advertisement, etc | ... | 12 14 6 | 412 7 5 | 425 5 11 |
| Auctioneer's fees ... ... | ... | . | 33 12 10 | 33 12 10 |
| Street lighting ... ... | ... | 2,613 11 10 | 563 15 10 | 3,177 11 8 |
| " watering ... | .. | 193 12 0 | . | 193 12 0 |
| Conservancy . . .. | ... | 2,189 9 3 | . | 2,189 9 3 |
| Cost of survey .. ... | . | . | 35 0 3 | 35 0 3 |
| " " acquiring land . ... | | 3,059 8 5 | 4,55,518 13 1 | 4,58,578 5 6 |
| Adjustment of advances to Corporation ... | 8,000 | ... | ... | ... |
| Stores ... | 10,000 | ... | ... | ... |
| Engineering works . ... | 90,000 | . | ... | ... |
| Road construction, drainage and sewerage works | ... | 49,348 13 10 | 92,362 4 0 | 1,41,711 1 10 |
| Water works ... ... . | ... | 510 6 10 | 23,573 3 2 | 24,083 10 0 |
| Tree planting ... ... ... | ... | 4 0 0 | . | 4 0 0 |
| Gas supply ... ... ... | .. | 951 11 5 | 4,753 5 10 | 5,705 1 3 |
| Shifting electric supply cables ... | .. | 2,455 11 6 | 584 13 0 | 3,040 8 6 |
| Contingencies ... .. ... | ... | 988 4 4 | 610 1 5 | 1,598 5 9 |
| | 1,08,000 | 62,328 7 11 | 5,78,447 12 10 | 6,40,776 4 9 |
| | 50,20,000 | 36,59,500 14 3 | 3,71,31,212 1 8 | 4,07,90,712 15 11 |

**Capital Account—(Expenditure)**—*continued.*

| Expenditure. | Budget for 1921-22 | Actuals for 1921-22. | | | Actuals to 31st March 1921. | | | Actuals to 31st March 1922 | | |
|---|---|---|---|---|---|---|---|---|---|---|
| | Rs. | Rs | A. | P. | Rs | A | P. | Rs | A | P. |
| Brought forward ... | 50,20,000 | 36,59,500 | 14 | 3 | 3,71,31,212 | 1 | 8 | 4,07,90,712 | 15 | 11 |
| Scheme No XIII (Marcus Square Extension)— | | | | | | | | | | |
| Advertisement, etc ... .. | 500 | 12 | 3 | 4 | 221 | 6 | 3 | 233 | 9 | 7 |
| Auctioneer's fees .. .. | 500 | ... | | | 634 | 6 | 5 | 634 | 6 | 5 |
| Street lighting .. .. ... | .. | 192 | 6 | 2 | | | | 192 | 6 | 2 |
| Cost of survey ... ... ... | .. | .. | | | 2 | 9 | 4 | 2 | 9 | 4 |
| " acquiring land ... .. | .. | 10,827 | 7 | 8 | 4,01,938 | 5 | 7 | 4,12,765 | 13 | 3 |
| Stores ... .. ... | 8,000 | . | | | . | | | .. | | |
| Engineering works .. .. | 42,000 | ... | | | . | | | . | | |
| Road, construction, drainage and sewerage works. | ... | 14,220 | 12 | 6 | 9 | 8 | 0 | 14,230 | 4 | 6 |
| Water works .. ... .. | .. | 6,166 | 13 | 0 | .. | | | 6,166 | 13 | 0 |
| Street lighting .. .. | ... | 876 | 4 | 4 | ... | | | 876 | 4 | 4 |
| Contingencies .. .. .. | .. | 0 | 6 | 3 | .. | | | 0 | 6 | 3 |
| | 51,000 | 32,296 | 5 | 3 | 4,02,806 | 3 | 7 | 4,35,102 | 8 | 10 |
| Scheme No XIV (Shambazar Park)— | | | | | | | | | | |
| Advertisement, etc . ... | ... | 5 | 14 | 0 | 187 | 12 | 0 | 193 | 10 | 0 |
| Auctioneer's fees... ... ... | . | .. | | | 1,591 | 3 | 3 | 1,591 | 3 | 3 |
| Conservancy ... .. ... | .. | 620 | 8 | 9 | 133 | 13 | 6 | 754 | 6 | 3 |
| Street lighting ... . .. | ... | 110 | 10 | 6 | . | | | 110 | 10 | 6 |
| Cost of survey . .. ... | ... | 90 | 6 | 8 | 38 | 2 | 5 | 128 | 9 | 1 |
| " acquiring land .. . | .. | 14,302 | 6 | 0 | 9,28,843 | 0 | 5 | 9,43,145 | 6 | 5 |
| Stores .. ... .. | 9,000 | ... | | | .. | | | . | | |
| Adjustment of advances to Corporation ... | 2,500 | ... | | | ... | | | ... | | |
| Engineering works ... ... | 66,000 | .. | | | | | | ... | | |
| Road construction, drainage and sewerage works | .. | 12,571 | 11 | 6 | 1,185 | 10 | 3 | 13,757 | 5 | 9 |
| Water works ... .. | | 5,018 | 5 | 7 | 2,687 | 3 | 0 | 7,705 | 8 | 7 |
| Gas supply .. ... .. | ... | 18 | 2 | 8 | 15 | 14 | 6 | 34 | 1 | 2 |
| Earth removal .. . ... | ... | 429 | 9 | 3 | .. | | | 429 | 9 | 3 |
| Park construction ... ... | ... | 9,547 | 15 | 0 | 26,018 | 7 | 5 | 35,566 | 6 | 5 |
| Tank-filling .. ... ... | ... | 29,915 | 1 | 6 | | | | 29,915 | 1 | 6 |
| Contingencies ... ... .. | ... | 2,501 | 11 | 9 | 115 | 5 | 8 | 2,617 | 1 | 5 |
| | 77,500 | 75,132 | 7 | 2 | 9,60,816 | 8 | 5 | 10,35,948 | 15 | 7 |
| Scheme No. XIVA— | | | | | | | | | | |
| Preliminary expenses ... .. | ... | ... | | | 259 | 14 | 0 | 259 | 14 | 0 |
| Scheme No XV (Section A)— | | | | | | | | | | |
| Preliminary expenses ... ... | .. | ... | | | 420 | 2 | 4 | 420 | 2 | 4 |
| Auctioneer's fees ... .. | ... | 148 | 3 | 2 | ... | | | 148 | 3 | 2 |
| Cost of survey ... ... ... | ... | 33 | 1 | 9 | 26 | 11 | 10 | 59 | 13 | 7 |
| Cost of acquiring land ... ... | ... | 2,18,903 | 3 | 8 | ... | | | 2,18,903 | 3 | 8 |
| | ... | 2,19,084 | 8 | 7 | 446 | 14 | 2 | 2,19,531 | 6 | 9 |
| Carried over .. | 51,48,500 | 39,86,014 | 3 | 3 | 3,84,95,541 | 9 | 10 | 4,24,81,555 | 13 | 1 |

**Capital Account—(Expenditure)—*continued.***

| Expenditure | Budget for 1921-22 | Actuals for 1921-22 | Actuals to 31st March 1921 | Actuals to 31st March 1922. |
|---|---|---|---|---|
| | Rs | Rs A. P | Rs A. P. | Rs A P. |
| Brought forward ... | 51,48,500 | 39 86,014 3 3 | 3,84,95,541 9 10 | 4,24,81,555 13 1 |
| Scheme No. XV (Section B)— | | | | |
| Preliminary expenses ... . | .. | 6 0 0 | 464 0 5 | 470 0 5 |
| Auctioneer's fees ... ... ... | ... | 166 4 5 | .. | 166 4 5 |
| Cost of survey ... .. .. | ... | 78 14 6 | 101 5 4 | 180 3 10 |
| Cost of acquiring land .. ... | ... | 4,59,808 11 7 | ... | 4,59,808 11 7 |
| Engineering works— Road construction, etc ... .. | ... | 4,626 15 0 | ... | 4,626 15 0 |
| | ... | 4,64,686 13 6 | 565 5 9 | 4,65,252 3 3 |
| Scheme No XV (Section C)— | | | | |
| Preliminary expenses ... . | . | ... | 407 9 4 | 407 9 4 |
| Auctioner's fees ... ... ... | ... | 15 6 4 | | 15 6 4 |
| Cost of survey ... ... ... | .. | 62 14 6 | 37 13 0 | 100 11 6 |
| Engineering works—Contingencies .. | 45,000 | 51 4 0 | .. | 51 4 0 |
| Cost of acquiring land .. ... | 7,00,000 | 6,47,056 11 9 | ... | 6,47,056 11 9 |
| Stores ... ... .. | 5,000 | ... | ... | .. |
| | 7,50,000 | 6 47,186 4 7 | 445 6 4 | 6,47,631 10 11 |
| Scheme No XVI— | | | | |
| Preliminary expenses ... .. | ... | 263 0 0 | 500 3 11 | 763 3 11 |
| Auctioneer's fees ... ... | .. | 176 0 0 | ... | 176 0 0 |
| Cost of survey ... ... .. | | ... | 33 6 0 | 33 6 0 |
| " " acquiring land ... ... | .. | 463 7 2 | ... | 463 7 2 |
| | . | 902 7 2 | 533 9 11 | 1,436 1 1 |
| Scheme No XVII— | | | | |
| Preliminary expenses .. ... | ... | 275 10 3 | 6 6 10 | 282 1 1 |
| Scheme No XVIIA— | | | | |
| Preliminary expenses ... ... | .. . | 374 8 0 | . | 374 8 0 |
| Scheme No. XVIII— | | | | |
| Preliminary expenses .. ... | ... | 220 0 0 | ... | 220 0 0 |
| Scheme No XIX— | | | | |
| Preliminary expenses ... .. | ... | 244 2 0 | ... | 244 2 0 |
| Scheme No. XX— | | | | |
| Preliminary expenses .. ... | ... | 302 8 3 | ... | 302 8 3 |
| Scheme No. XXII— | | | | |
| Preliminary expenses ... ... | ... | 106 14 0 | ... | 106 14 0 |
| Land area for earth excavation— | | | | |
| Auctioner's fees ... ... ... | ... | ... | 321 8 8 | 321 8 8 |
| Cost of survey ... ... ... | ... | 78 2 0 | 246 6 3 | 324 8 3 |
| " " acquiring land ... .. | ... | 132 8 6 | 5,29,588 14 3 | 5,29,721 6 9 |
| Engineering works ... ... | 10,000 | ... | ... | ... |
| Tank-filling ... ... .. | ... | 24,505 8 0 | 3,099 15 9 | 27,605 7 9 |
| Earth removal ... ... | ... | ... | 371 14 0 | 371 14 0 |
| Road construction, drainage and sewerage works | ... | 25 6 0 | 907 3 11 | 932 9 11 |
| Water works ... ... ... | ... | ... | 595 0 0 | 595 0 0 |
| Contingencies ... .. ... | ... | 993 13 2 | 1,761 7 10 | 2,755 5 0 |
| | 10,000 | 25,735 5 8 | 5,36,892 6 8 | 5,62,627 12 4 |
| Carried over ... | 59,08,500 | 51,26,048 12 8 | 3,90,33,984 13 4 | 4,41,60,033 10 0 |

**Capital Account—(Expenditure)—*continued.***

| Expenditure. | Budget for 1921-22 | Actuals for 1921-22. | Actuals to 31st March 1921. | Actuals to 31st March 1922 |
|---|---|---|---|---|
| | Rs | Rs A. P | Rs A P | Rs A P |
| Brought forward ... | 59,08,500 | 51,26,048 12 8 | 3,90,33,984 13 4 | 4,41,60,033 10 0 |
| Dalhousie Square Scheme— | | | | |
| Preliminary expenses ... ... | . | ... | 111 15 0 | 111 15 0 |
| Widening Chowringhee Road between Elgin Road and Circular Road— | | | | |
| Street lighting ... ... | ... | . | 445 14 10 | 445 14 10 |
| Engineering works— | | | | |
| Road construction, drainage and sewerage | ... | ... | 25,939 14 7 | 25,939 14 7 |
| Gas lighting ... .. | ... | . | 2,556 4 3 | 2,556 4 3 |
| Tree planting ... . | ... | | 1,492 7 2 | 1,492 7 2 |
| Tramway .. .. | .. | .. | 11,979 0 2 | 11,979 0 2 |
| Contingencies .. | . | .. | 291 9 3 | 291 9 3 |
| | ... | .. | 42,705 2 3 | 42,705 2 3 |
| Re-housing Scheme No I— | | | | |
| Preliminary expenses ... .. | . | . | 263 9 0 | 263 9 0 |
| Telephone ... .. | ... | . | 220 0 0 | 220 0 0 |
| Miscellaneous ... .. | ... | | 4 0 0 | 4 0 0 |
| Cost of acquiring land ... .. | .. | . | 72,371 4 3 | 72,371 4 3 |
| „ Constructing buildings .. | . | .. | 1,71,996 14 1 | 1,71,996 14 1 |
| | | .. | 2 44,855 11 4 | 2,44,855 11 4 |
| Re-housing Scheme at Karbala Tank Lane— | | | | |
| Conservancy ... .. | .. | 337 8 0 | 160 13 9 | 498 5 9 |
| Advertisement, etc ... | .. | . | 35 3 0 | 35 3 0 |
| Auctioneer's fees . .. | ... | ... | 26 0 0 | 26 0 0 |
| Street lighting ... .. | ... | 144 0 0 | 28 4 2 | 172 4 2 |
| Cost of acquiring land ... ... | .. | 20 053 6 0 | 2,27,179 12 4 | 2,47,233 3 4 |
| Stores ... .. | 3,000 | . | | |
| Engineering works ... .. | 3,00,000 | . | | . |
| Road construction, drainage and sewerage Works | ... | *Cr* 112 11 3 | 14,195 1 8 | 14,082 6 5 |
| Water works ... ... | ... | 827 7 10 | 4,482 8 9 | 5,310 0 7 |
| Gas supply ... ... | ... | ... | 73 10 6 | 73 10 6 |
| Contingencies ... ... | ... | 376 4 6 | 20 6 8 | 396 11 2 |
| Building construction .. ... | ... | 3,87,068 12 0 | .. | 3,87,068 12 0 |
| | 3,03,000 | 4,08,694 11 1 | 2,46,201 13 10 | 6,54,896 8 11 |
| Re-housing at Bow Street— | | | | |
| Advertisement, etc. ... | ... | ... | 31 9 0 | 31 9 0 |
| Auctioneer's fees ... ... | ... | 396 0 0 | 1,087 0 0 | 1,483 0 0 |
| Street watering ... ... | ... | 27 7 1 | . | 27 7 1 |
| Conservancy ... ... | ... | 234 9 7 | ... | 234 9 7 |
| Street lighting ... .. | ... | 154 10 8 | .. | 154 10 8 |
| Cost of survey ... ... | ... | 35 4 5 | ... | 35 4 5 |
| „ acquiring land ... ... | ... | 57,303 1 8 | 6,72,049 3 8 | 7,29,352 5 4 |
| Engineering works ... ... | 1,00,000 | ... | ... | ... |
| Water works ... ... | ... | 20 13 0 | ... | 20 13 0 |
| Earth removal ... ... | ... | 2,326 3 6 | ... | 2,326 3 6 |
| Construction of dwellings ... ... | ... | 9,077 8 3 | ... | 9,077 8 3 |
| | 1,00,000 | 69,575 10 2 | 6,73,167 12 8 | 7,42,743 6 10 |
| Carried over ... | 63,11,500 | 56,04,319 1 11 | 4,02 41,027 4 5 | 4 58,45,346 6 4 |

**Capital Account—(Expenditure)**—*continued*

| Expenditure | Budget for 1921-22 | Actuals for 1921-22 | Actuals to 31st March 1921 | Actuals to 31st March 1922 |
|---|---|---|---|---|
| | Rs. | Rs A P | Rs. A P | Rs A. P. |
| Brought forward ... | 63,11,500 | 56,04,319 1 11 | 4,02,41,027 4 5 | 4,58,45,346 6 4 |
| Re-housing at Manicktala Bustee, Site No I — | | | | |
| Auctioneer's fees ... .. | ... | 39 3 2 | ... | 39 3 2 |
| Cost of survey ... ... | ... | 43 12 0 | ... | 43 12 0 |
| " acquiring land ... ... | 2,13,000 | 4,456 1 4 | 2,39,870 13 4 | 2,44,326 14 8 |
| Engineering works— | 20,000 | ... | | ... |
| Road construction, drainage and sewerage works | ... | 4,707 10 6 | ... | 4,707 10 6 |
| Contingencies ... ... | ... | 21 14 0 | ... | 21 14 0 |
| | 2,33,000 | 9,268 9 0 | 2,39,870 13 4 | 2,49,139 6 4 |
| Re-housing at Manicktala Busti, Site No II — | | | | |
| Cost of survey ... ... | ... | 49 0 0 | ... | 49 0 0 |
| " acquiring land ... ... | ... | 2,82,273 4 5 | ... | 2,82,273 4 5 |
| | ... | 2,82,322 4 5 | ... | 2,82,322 4 5 |
| Paikpara Re housing— | | | | |
| Auctioneer's fees ... ... | ... | 82 0 9 | .. | 82 0 9 |
| Cost of acquiring land ... ... | .. | 6,68,229 13 7 | ... | 6,68,229 13 7 |
| Engineering works ... .. | 50,000 | .. | .. | ... |
| | 50,000 | 6,68,311 14 4 | ... | 6,68,311 14 4 |
| Burrabazar Improvement Scheme, No I (S. W. Section)— | | | | |
| Preliminary expenses .. ... | ... | 502 8 0 | 272 8 0 | 775 0 0 |
| Burrabazar Open Space— | | | | |
| Cost of acquiring land ... ... | ... | 850 10 4 | 3,22,927 15 4 | 3,23,778 9 8 |
| Cossipore-Chitpore Open Space— | | | | |
| Auctioneer's fees .. ... | ... | 701 6 6 | ... | 701 6 6 |
| Cost of acquiring land ... ... | 40,00,000 | 35,62,007 2 5 | .. | 35,62,007 2 5 |
| Engineering works—Contingencies ... | ... | 4 12 0 | .. | 4 12 0 |
| | 40,00,000 | 35,62,713 4 11 | ... | 35,62,713 4 11 |
| Manicktala Improvement Scheme, No. I.— | | | | |
| Preliminary expense ... ... | ... | ... | 314 0 0 | 314 0 0 |
| Cost of survey ... ... | ... | ... | 10 10 4 | 10 10 4 |
| | ... | ... | 324 10 4 | 324 10 4 |
| Ram Kissen Dass Square— | | | | |
| Street lighting ... ... | ... | 270 4 4 | 40 0 0 | 310 4 4 |
| Conservancy ... ... | ... | 225 1 3 | 160 14 9 | 386 0 0 |
| Cost of acquiring land ... ... | ... | ... | 1,30,006 6 6 | 1,30,006 6 6 |
| Stores ... ... | 2,000 | ... | ... | ... |
| Engineering works ... ... | 8,000 | ... | ... | ... |
| Road construction, drainage and sewerage works. | ... | 2,516 13 2 | 2,348 1 9 | 4,864 14 11 |
| Water works ... ... | ... | 661 11 7 | 2,414 6 5 | 3,076 2 0 |
| Contingencies ... ... | ... | 2 5 4 | 5 4 0 | 7 9 4 |
| Park construction ... ... | ... | 880 0 0 | 13,306 0 3 | 14,186 0 3 |
| Gas lighting ... ... | ... | 841 7 6 | ... | 841 7 6 |
| | 10,000 | 5,397 11 2 | 1,48,281 1 8 | 1,53,678 12 10 |
| Carried over ... | 1,06,04,500 | 1,01,33,686 0 1 | 4,09,52,704 5 1 | 5,10,86,390 5 2 |

**Capital Account—(Expenditure)**—*continued*

| Expenditure | Budget for 1921-22 | Actuals for 1921-22 | Actuals to 31st March 1921. | Actuals to 31st March 1922 |
|---|---|---|---|---|
| | Rs | Rs A. P | Rs A P | Rs A P |
| Brought forward ... | 1,06,04,500 | 1,01,33,686 0 1 | 4,09,52,704 5 1 | 5,10,86,390 5 2 |
| **Store Yard, Entally—** | | | | |
| Auctioneer's fees ... .. | | ... | 3 4 0 | 3 4 0 |
| Cost of acquiring land .. . | . | 20 0 0 | 81,162 15 4 | 81,182 15 4 |
| Engineering works— | | | | |
| Cost of erection .. | .. | | 6 244 6 8 | 6,241 6 8 |
| " " extension . .. | 5,000 | 1,258 3 6 | 3,835 8 6 | 8,093 12 0 |
| | 5 000 | 4,278 3 6 | 91 216 2 6 | 95,524 6 0 |
| **Garialat Road Sewer—** | | | | |
| Engineering works— | | | | |
| Road construction, drainage, etc . | | 3,462 14 6 | 3,778 4 5 | 7,241 2 11 |
| Water works ... | . | | 1,882 14 7 | 1,882 14 7 |
| Contingencies .. | . | . . | 0 7 9 | 0 7 9 |
| | | 3,462 14 6 | 5,661 10 9 | 9,124 9 3 |
| **Diamond Harbour Road Widening—** | | | | |
| Cost of acquiring land . . | 7,00 000 | 1,286 5 0 | | 1,286 5 0 |
| **Bridges -Kidderpore—** | | | | |
| Engineering works ... . | . | 1 12,552 0 0 | . | 1,12,552 0 0 |
| **Ratan Sircar Garden Street—** | | | | |
| Engineering works— | | | | |
| Contingencies . | .. | 8 0 0 | .. | 8 0 0 |
| Cost of Setbacks in Published Alignments | 2,00,000 | . | . | |
| Street alignment No I—Cost of land . | ... | ... | 52,291 0 3 | 52,291 0 3 |
| " " " II " ... | ... | 60 8 6 | 18,184 8 4 | 18,245 0 10 |
| " " " III " . | . | | 3,795 8 10 | 3,795 8 10 |
| " " " V " . | .. | 19,747 11 11 | | 19,747 11 11 |
| " " " VI " ... | ... | 2,930 7 1 | 73,363 12 3 | 76,294 3 4 |
| " " " VII " | .. | | 6,379 6 1 | 6,379 6 1 |
| " " " X " . | | . | 64,929 8 0 | 64,929 8 0 |
| " " " XII " .. | ... | | 20,732 13 8 | 20,732 13 8 |
| " " " XVI " ... | .. | 2,67,265 3 9 | 1 91,974 6 4 | 4,59,259 10 1 |
| " " " XX " | .. | . | 49,333 8 3 | 49,333 8 3 |
| " " " XXIII " .. | . | | 5,000 0 0 | 5,000 0 0 |
| " " at Kamardanga Bridge . | ... | .. | 33,399 0 0 | 33,399 0 0 |
| Burrabazar " No I—Cost of land . | .. | . | 17,250 0 0 | 17,250 0 0 |
| " " " II " . | .. | . | 73,743 12 0 | 73 743 12 0 |
| | 2,00,000 | 2,90,023 15 3 | 6,10,377 4 0 | 9,00,401 3 3 |
| **Street alignment No I—** | | | | |
| Auctioneer's fees ... ... | ... | ... | 11 0 0 | 11 0 0 |
| **Street alignment No XVI—** | | | | |
| Auctioneer's fees .. ... | ... | ... | 8 9 5 | 8 9 5 |
| **Street Alignment No. II—** | | | | |
| Auctioneer's fees ... ... | ... | 14 0 0 | ... | 14 0 0 |
| Cost of land acquisition office ... | 99,000 | 611 4 0 | 4,71,270 2 9 | 881 6 9 |
| Carried over ... | 1,16,08,500 | 1,05,45,922 10 4 | 4,21,31,279 2 6 | 5,26,77,201 12 10 |

**Capital Account—(Expenditure)—*concluded.***

| Expenditure | Budget for 1921-22. | Actuals for 1921-22. | Actuals to 31st March 1921 | Actuals to 31st March 1922 |
|---|---|---|---|---|
| | Rs | Rs. A P. | Rs A P | Rs A. P. |
| Brought forward ... | 1,16,08,500 | 1,05,45,922 10 4 | 4,21,31,279 2 6 | 5,26,77,201 12 10 |
| Tools and plant ... ... ... | 52,000 | 45,502 5 0 | 53,742 12 10 | 99,245 1 10 |
| Survey motor car ... ... ... | ... | ... | 2,508 0 0 | 2,508 0 0 |
| Maintenances survey motor car ... ... | .. | ... | 1,751 10 2 | 1,751 10 2 |
| Government surveys ... ... | .. | .. | 1,92,082 4 0 | 1,92,082 4 0 |
| Cost of land from Government relaying tram track | ... | .. | 92,000 0 0 | 92,000 0 0 |
| Store appropriated in workshop ... | ... | 187 8 9 | 1,854 15 6 | 2,042 8 3 |
| | 52,000 | 45,689 13 9 | 3,43,939 10 6 | 3,89,629 8 3 |
| Bhowanipore Storm Water Relief Sewer— | | | | |
| Engineering works ... ... | 1,50,000 | ... | ... | |
| Maniktala (land)— | | | | |
| Open Space No II ... ... | 5,61,000 | .. | ... | ... |
| Amherst Street— | | | | |
| Acquisition of Alms House . ... | 2,75,000 | ... | ... | ... |
| Bridges—Dum-Dum .. ... | 35,000 | ... | ... | ... |
| Tribunal awards on older schemes ... | 2,00,000 | ... | ... | ... |
| New scheme for sanction during the years— | | | | |
| Preliminary expenses ... ... | 2,000 | ... | ... | ... |
| For all schemes— | | | | |
| Street lighting .. ... | 20,000 | ... | .. | ... |
| " watering ... ... | 5,000 | .. | ... | ... |
| Conservancy ... . ... | 20,000 | ... | ... | ... |
| Maintenance ... ... ... | 5 000 | ... | ... | ... |
| Telephone ... ... ... | 1,000 | ... | ... | ... |
| Survey ... .. ... | 2,000 | ... | ... | ... |
| | 53,000 | ... | ... | ... |
| GRAND TOTAL ... | 1,29,56,500 | 1,05,91,612 8 1 | 4,24,75,218 13 0 | 5,30,66,831 5 1 |

## Revenue Account—Statement of Income and Expenditure, 1921-22.

INCOME

| Receipts | Budget for 1921-22 | Actuals for 1921-22 | | |
|---|---|---|---|---|
| | Rs | Rs | A | P |
| Opening balance ... | | 2,23,78,062 | 2 | 10 |
| A Under Section 124 (a)— | | | | |
| Interest under Section 78— | | | | |
| Interest on exemption fees— | | | | |
| 1. Scheme No I (Surtibagan) ... | | 1,468 | 0 | 0 |
| 2. " " IB " ... . | | 102 | 0 | 0 |
| 3 " " IC " ... .. ... | | 1,044 | 0 | 0 |
| 4 " " II (Shambazar Bridge Road) ... | | 233 | 12 | 10 |
| 5 " " IIA (Cornwallis Street) . . | | 580 | 0 | 0 |
| 6. " " III (Wards Institution Lane) .. . | | 459 | 14 | 3 |
| 7. " " IV (Russa Road Widening) ... | | 3,269 | 13 | 0 |
| 8 " " IVA (Russa Road Extension) .. ... | | 620 | 3 | 3 |
| 9 " " V (Bhowampur) .. ... . | 23,000 | 14,960 | 10 | 4 |
| 10. " " VII (Central Avenue—Machuabazar Street to Beadon Street) | | 264 | 0 | 0 |
| 11 " " VIIA (Central Avenue—Halliday Street Widening) | | 446 | 0 | 0 |
| 12 " " VIIB (Central Avenue—Colootola Street to Bowbazar Street) | | 632 | 0 | 0 |
| 13. " " VIIC (Manicktala Spur) ... . | | 2,000 | 0 | 0 |
| 14. " " VIIIA (Outer Park Street) . | | 46 | 15 | 3 |
| | | 26,129 | 4 | 11 |
| B Under Section 124 (b)— | | | | |
| (a) Duty on transfer of property .. . | 8,00,000 | 6,53,832 | 7 | 0 |
| (b) Terminal tax ... . . | 1,80,000 | 2,05,922 | 9 | 3 |
| (c) Duty on jute ... .. ... ... | 8,00,000 | 7,76,262 | 8 | 7 |
| | 18,03,000 | 16,36,017 | 8 | 10 |
| C Under Section 124 (c)— | | | | |
| Municipal contribution .. . ... | 10,91,360 | 11,12,833 | 3 | 8 |
| D. Under Section 124 (e)— | | | | |
| Government grant ... ... ... .. | 1,50,000 | 1,50,000 | 0 | 0 |
| E. Under Section 124 (g)— | | | | |
| 1 Rent—Scheme No I (Surtibagan) ... ... | | 2,429 | 6 | 0 |
| 2 " " " I (Alteration) (Surtibagan) ... | | 12,437 | 8 | 0 |
| 3. " " " IA (Alteration) (Surtibagan) ... | | 260 | 0 | 0 |
| 4. " " " IC (Ismail Madan Lane) ... | | 1,541 | 2 | 0 |
| 5 " " " IVA (Russa Road Extension) ... | | 3,971 | 15 | 9 |
| 6 " " " V (Bhowampur) .. ... | | 508 | 4 | 0 |
| 7 " " " VII (Central Avenue—Machuabazar Street to Beadon Street) | | 6,756 | 13 | 0 |
| 8. " " " VIIB (Central Avenue—Colootola Street to Bowbazar Street) | | 111 | 14 | 0 |
| 9 " " " VIIC (Manicktala Spur) ... | 2,00,000 | 68,304 | 5 | 9 |
| 10 " " " VIID (Central Avenue—Bowbazar Street to Prinsep Street) | | 48,116 | 5 | 9 |
| 11. " " " VII (Chitpore pur) ... ... | | 8,346 | 7 | 6 |
| 12. " " " VIIE ... ... ... | | 49 | 5 | 9 |
| 13 " " " VIII (Park Street Extension) ... | | 25,808 | 1 | 9 |
| 14. " " " VIIIA (Outer Park Street) ... | | 7,598 | 13 | 0 |
| 15. " " " XI (St James' Square) .. | | 6,022 | 6 | 0 |
| 16. " " " XIV (Sham Bazar Park) ... | | 3,614 | 12 | 0 |
| 17 " " " XV (Main Sewer Road—Chetla to Ballygunge). | | 3,195 | 8 | 9 |
| Carried over ... | 2,00,000 | 1,99,073 | 1 | 0 |
| Carried over ... | 30,44,360 | 29,24,980 | 1 | 5 |

**Revenue Account—(Income)—*continued.***

| Receipts | Budget for 1921-22 | Actuals for 1921-22. |
|---|---|---|
| | Rs. | Rs A. P. |
| Brought forward ... | 30,44,360 | 29,24,980 1 5 |
| E Under Section 124 (*g*)—*contd* | | |
| Brought forward ... | 22,00,000 | 1,99,076 1 0 |
| 18 Rent—(Bow Street Re-housing) ... ... ... | ... | 540 10 0 |
| 19. " Manicktala Re-housing B, S No I ... ... | ... | 187 8 6 |
| 20 " Parkpara Re-housing .. ... .. | ... | 751 7 9 |
| 21. " Re housing at Karbala Tank Lane ... ... | ... | 191 2 9 |
| 22 " Excavation area ... ... ... | ... | 508 8 0 |
| 23 " Burrabazar alignment No I ... .. | ... | 1,440 0 0 |
| 24 " Re-housing scheme No I ... ... | 10,000 | 13,755 0 0 |
| 25 " Cossipore-Chitpore open space ... ... | .. | 1,856 5 9 |
| Rent—Street alignment No. I ... ... | ... | 375 0 0 |
| 26 " " " " II . .. | ... | 19 0 0 |
| " " " " V ... ... | ... | 45 0 0 |
| 27 " " " " VI ... ... | ... | 3,634 0 0 |
| 28 " " " " XVI ... ... | ... | 10,748 4 9 |
| 29 " " " " XX ... .. | ... | 1,500 0 0 |
| | 2,10,000 | 2,34,625 0 6 |
| Rent on leasehold— | | |
| 1 Scheme No I (Surtibagan) ... ... ... | 5,000 | 597 0 0 |
| 2. " " II (Shambazar Bridge Road) ... ... | | 2 689 0 0 |
| 3 " " V (Bhowanipur) ... .. ... | | 260 6 0 |
| | 5,000 | 3,546 6 0 |
| Rent charges— | | |
| 1 Scheme No I (Surtibagan) ... ... ... | 44,000 | 8,915 15 6 |
| 2 " " IB ( " ) ... ... ... | | 567 0 0 |
| 3 " " IC (Ismail Madan Lane) ... ... | | 2,412 0 0 |
| 4. " " II (Shambazar Bridge Road) ... ... | | 301 0 0 |
| 5 " " IIA (Cornwallis Street) ... ... | | 428 0 0 |
| 6 " " IV (Russa Road Widening) ... .. | | 2,258 15 9 |
| 7 " " IVA (Russa Road Extension) ... ... | | 2,135 3 6 |
| 8 " " V (Bhowanipur) ... ... ... | | 31,548 14 5 |
| 9. " " VII (Central Avenue—Mechua Bazar to Beadon Street). | | 1,016 14 0 |
| 10 " " VIIA (Central Avenue—Halliday Street Widening) | | 925 0 0 |
| 11 " " VIIB (Central Avenue—Colootola Street to Bowbazar Street) | ... | 8,485 12 6 |
| 12 " " XI (St. James' Square) ... ... | ... | 43 2 0 |
| | 44,000 | 59,037 13 8 |
| Interest on sale of land— | | |
| Scheme No I (Surtibagan) ... ... | ... | 298 8 0 |
| " " IVA (Russa Road Extension) ... | . | 2,275 12 3 |
| " " V (Bhowanipur) ... ... | ... | 1,173 4 6 |
| " " VII (Central Avenue—Mechua Bazar Street to Beadon Street). | ... | 298 2 6 |
| " " VIIA (Central Avenue—Halliday Street Widening). | ... | 10 2 0 |
| " " VIIB (Central Avenue—Colootola Street to Bowbazar Street). | ... | 70 0 0 |
| " " VII (Chitpore Spur) ... ... | ... | 619 1 4 |
| " " VIII (Park Street Extension) ... | ... | 229 10 1 |
| " " VIIIA (Outer Park Street) ... ... | ... | 53 4 6 |
| | ... | 5,027 13 2 |
| Carried over ... | 33,03,360 | 32,27,217 2 9 |

**Revenue Account—(Income)**—*concluded*

| Receipts. | Budget for 1921-22 | Actuals for 1921-22 |
|---|---|---|
| | Rs | Rs A P. |
| Brought forward ... | 33,03,360 | 32,27,217 2 9 |
| F Under Section 124 (*h*)— | | |
| 1. Interest on— | | |
| Government Promissory notes ... ... | | 1,03,653 15 4 |
| Calcutta Municipal Debentures ... | | 2,029 2 8 |
| " Port Trust " ... | 1,25,000 | 5,986 12 0 |
| 5½ per cent War Bonds ... | | 17,224 6 6 |
| Treasury Bills ... ... .. | | 13,125 0 0 |
| Exchange Banks .. .. ... | | 23,930 1 9 |
| Rebate on Debenture Loan ... ... | 1,00,000 | 1,62,500 0 0 |
| | 2,25,000 | 3,28,449 6 3 |
| Fees under section 43 (3) | 300 | 501 4 0 |
| Sale of tender forms ... ... | 300 | 1,144 0 0 |
| Fees under section 63 (3) (iv) .. | 300 | 284 10 0 |
| Miscellaneous ... .. | 2,000 | 3,578 12 1 |
| | 2,900 | 5,508 10 1 |
| Recovery of Law Costs— | | |
| (*a*) Land acquisition proceedings .. .. | 2,000 | 2,802 1 11 |
| (*b*) Civil suits ... ... .. | 1,000 | 2,569 5 0 |
| | 3,000 | 5,371 6 11 |
| Scheme No VIIIA—Interest on sale of buildings .. | ... | 13 14 3 |
| Total ... | 35,34,260 | 35,66,560 8 3 |
| GRAND TOTAL .. | 35,34,260 | 2,59,44,622 11 1 |

## Revenue Account—Statement of Income and Expenditure, 1921-22.

### EXPENDITURE.

| Expenditure. | Budget for 1921-22. | Actuals for 1921-22 |
|---|---|---|
| | Rs. | Rs A. P. |
| A. Under Section 125 (*a*)— | | |
| Charges in connection with New Debenture Loan of Rs 50 lakhs— | | |
| 1 Debenture forms, etc ... ... ... | 15,000 | 10,003 7 7 |
| 2. Stamp duty ... ... . ... | ... | ... |
| 3 Interest thereon ... .. ... ... | 3,25,000 | 3,25,000 0 0 |
| 4 Management ... .. ... | 2,000 | 1,820 10 0 |
| | 3,42,000 | 3,36,824 1 7 |
| B Under Section 125 (*b*)— | | |
| 1 Rates and taxes ... ... ... .. | 50,000 | 46 618 3 8 |
| C Under Section 125 (*c*)— | | |
| 1 Salary and allowance of estates manager ... ... | 9,040 | 10,222 0 0 |
| 2. Clerical establishment of estates manager ... ... | 6,457 | 8,627 3 3 |
| 3 Collection establishment of estates manager ... ... | 2,925 | 4,370 13 7 |
| 4 Menial establishment of estates manager ... ... | 1,044 | 848 2 2 |
| | 19,466 | 24,068 3 0 |
| D Under Section 125 (*f*)— | | |
| Under Section 120 (1) (*a*)— | | |
| 1. Salary and allowance of the Chairman ... ... | 48,000 | 51,741 15 0 |
| Under Section 120 (1) (*b*)— | | |
| 2. Fees for attendance at meetings ... ... | 15,000 | 12,010 0 0 |
| Under Section 120 (1) (*d*)— | | |
| 3. Clerical establishment of the Chairman ... ... | 8,093 | 7,706 5 2 |
| 4 Menial establishment of the Chairman ... ... | 2,868 | 2,782 12 10 |
| 5 Salary and allowance of Secretary and Chief Accountant .. | 12,800 | 12,924 3 2 |
| 6 Clerical establishment of Secretary and Chief Accountant | 7,193 | 8,863 6 8 |
| 7 Menial establishment of Secretary and Chief Accountant .. | 1,284 | 1,289 2 1 |
| 8 Clerical " of Accounts Department ... | 10,250 | 12,259 7 9 |
| 9 Menial " " " ... .. | 624 | 638 12 1 |
| 10. Salary and allowance of Chief Valuer ... ... | 15,000 | 10,090 5 1 |
| 11 " " " Deputy Valuer ... ... | 15,200 | 11,824 2 0 |
| 12 Valuation Establishment of Chief Valuer ... ... | 47,276 | 50,932 13 10 |
| 13. Clerical " " ... ... | 7,206 | 10,355 14 3 |
| 14. Government Pleader's establishment .. | 2,788 | 3,177 7 11 |
| 15 Menial establishment of Chief Valuer ... ... | 4,896 | 4,592 8 1 |
| 16 Salary and allowance of Chief Engineer ... ... | 27,140 | *27,039 4 6 |
| 17 " " Deputy " ... .. | 28,842 | 18,066 6 0 |
| 18 " " Assistant " ... ... | 15,000 | 14,559 15 0 |
| 19 " " Chief Surveyor ... ... | 11,287 | 11,236 10 6 |
| 20. Clerical establishment of Chief Engineer ... ... | 13,070 | 16,970 12 0 |
| 21. Drawing " " ... ... | 39,670 | 39,020 14 9 |
| 22. Workshop and stores " ... .. | 12,621 | 13,028 10 6 |
| 23 Outdoor establishment " ... .. | 52,731 | 59,170 10 6 |
| 24. Temporary " " ... ... | 2,000 | 1,057 12 6 |
| 25. " Survey establishment of Chief Surveyor .. | 5,589 | 3,288 7 6 |
| 26. Menial establishment of Chief Engineer ... ... | 21,516 | 17,545 14 11 |
| 27. Leave allowance ... ... | 25,000 | 18,286 15 2 |
| 29. Reserve for re-adjustment of salaries ... ... | 50,000 | ... |
| 30. Trusts contribution to provident fund ... ... | 1,000 | 1,152 9 5 |
| 31 Bonus for indexing Board's proceedings ... ... | ... | 200 0 0 |
| 32 Pipe laying establishment of Chief Engineer ... ... | .. | 14,974 6 6 |
| | 4,40,944 | 3,93,036 11 8 |
| Carried over ... | 9,15,410 | 8,64,299 2 11 |

**Revenue Account - (Expenditure)**—*continued.*

| Expenditure. | Budget for 1921-22 | Actuals for 1921-22 | | |
|---|---|---|---|---|
| | Rs. | Rs. | A | P |
| Brought forward | 9,15,410 | 8,64,299 | 2 | 11 |
| E. Under Section 120 (*d*)— | | | | |
| 1 Salary to Corporation Engineer | 12,000 | 10,525 | 7 | 9 |
| F. Under Section 120 (*1*) (*e*)— | | | | |
| Cost of Tribunal | 97,800 | 83,037 | 2 | 9 |
| G Under Section 120 (*1*) (*f*)— | | | | |
| 1 Rent of offices | 23,104 | 23,103 | 9 | 0 |
| 2 Office fixtures | 2,000 | 343 | 3 | 6 |
| 3. " furniture | 2,000 | 1,961 | 14 | 0 |
| 4. Electric fittings | 3,000 | 1,510 | 8 | 0 |
| 5 " current | 2,000 | 2,232 | 14 | 0 |
| 6 Telephone | 3,000 | 1,930 | 0 | 0 |
| 7. Printing | 10,000 | 9,332 | 1 | 9 |
| 8 Photography | 500 | 513 | 12 | 0 |
| 9 Magazines and newspapers | 200 | 162 | 3 | 0 |
| 10 Books | 200 | 134 | 2 | 0 |
| 11 Book-binding | 100 | 62 | 8 | 0 |
| 12 Stationery | 12,000 | 10,341 | 1 | 3 |
| 13. Office contingencies | 3,000 | 4,356 | 10 | 1 |
| 14 Postage and telegram | 400 | 441 | 8 | 3 |
| 15. Peons' badges and uniform | 7,000 | 4,538 | 11 | 8 |
| 16 Cheque books | 150 | 162 | 8 | 0 |
| 17 Receipt stamp | 250 | 237 | 10 | 0 |
| 18 Drawing requisites | 10,000 | 9,724 | 4 | 0 |
| 19. Repairs to office buildings | 500 | ... | | |
| 20. Compensation for damages | 2,000 | ... | | |
| | 81,404 | 71,148 | 0 | 6 |
| H Under Section 125 (*1*) (*g*)— | | | | |
| 1 Mathematical and other instruments | 3,000 | 996 | 6 | 6 |
| 2 Advertisements | 4,000 | 5,436 | 11 | 0 |
| 3 Travelling allowances outside Calcutta | 1,000 | 15 | 14 | 6 |
| 4 " " in Calcutta | 1,000 | 1,613 | 12 | 9 |
| 5. Maps | 2,000 | 3,188 | 12 | 0 |
| 6 Expenses in connection with selection of officers | 500 | 1,620 | 14 | 9 |
| 7 Fire insurance | 200 | 762 | 8 | 0 |
| 8 Stamp duty | 60,000 | 57,237 | 10 | 0 |
| 9 Interest to provident fund | 5,000 | 4,713 | 10 | 0 |
| 11 Lawyer's fees— | | | | |
| (*a*) Legal advice | 3,000 | 2,212 | 3 | 0 |
| (*b*) Litigation | 30,000 | 4,948 | 7 | 0 |
| (*c*) Land acquisition | 20,000 | 14,010 | 0 | 0 |
| (*d*) Legal expenses of the Tribunal | 1,000 | 711 | 12 | 4 |
| 12 Fees to experts | 500 | 1,721 | 9 | 3 |
| 13 Royal Exchange membership | 180 | 180 | 0 | 0 |
| 14 Maintenance of motor lorry | 5,000 | 1,803 | 2 | 5 |
| 15 Bank commission | .. | 1,510 | 0 | 0 |
| | 1,36,380 | 1,02,713 | 5 | 6 |
| I. Expenses of management of property— | | | | |
| 1. Minor repairs | 1,000 | 132 | 9 | 0 |
| 2. Repairs to model dwellings | 5,000 | 3,832 | 5 | 9 |
| 3 Temporary durwans on schemes | 1,632 | 1,280 | 5 | 8 |
| 4. Menial Staff of model dwellings | 672 | 684 | 6 | 6 |
| 5. Contingencies, model dwellings | 200 | 52 | 10 | 0 |
| 6. Fencing for open spaces | 500 | ... | | |
| | 9,004 | 5,982 | 4 | 11 |
| Carried over | 12,51,998 | 11,37,705 | 8 | 4 |

**Revenue account—(Expenditure)—*concluded.***

| Expenditure. | Budget for 1921-22. | Actuals for 1921-22. |
|---|---|---|
| | Rs | Rs A P |
| Brought forward ... | 12,51,998 | 11,37,705 8 4 |
| Street alignment No I— Preliminary expenses .. ... .. ... | | 205 14 6 |
| Street alignment No II— Preliminary expenses ... .. . ... | | 26 8 0 |
| Street alignment No III— Preliminary expenses ... ... .. ... | | 142 5 6 |
| Street alignment No V— Preliminary expenses ... .. ... ... | | 459 6 6 |
| Street alignment No VIII— Preliminary expenses ... ... . .. | | 32 4 0 |
| Street alignment No IX— Preliminary expenses ... . ... ... | | 10 8 0 |
| Street alignment No. XI— Preliminary expenses . ... . .. | | 28 8 0 |
| Street alignment No XII— Preliminary expenses .. .. ... | 1,000 | 337 0 0 |
| Street alignment No XVI— Preliminary expenses ... ... .. . | | 112 14 0 |
| Street alignment No XX— Preliminary expenses ... ... ... | | 10 8 0 |
| Street alignment No. XXIII— Preliminary expenses ... ... ... ... | | 123 8 4 |
| Street alignment No XXIV— Preliminary expenses . ... . .. | | 194 4 11 |
| Street alignment No XXV— Preliminary expenses ... ... .. ... | | 321 15 0 |
| Street alignment No XXVI— Preliminary expenses .. . | | 217 8 [illegible] |
| Street alignment No XXVII— Preliminary expenses ... ... | . | 117 0 0 |
| Street alignment No XXIX— Preliminary expenses .. ... ... ... | ... | 15 7 8 |
| Street alignment No XXXII— Preliminary expenses ... . ... .. | ... | 210 11 3 |
| Street alignment No. XXXIV— Preliminary expenses .. ... ... | . | 236 8 0 |
| Street alignment No XXXV— Preliminary expenses ... ... .. .. | . | 41 2 0 |
| Street alignment No XXXVII— Preliminary expenses ... .. ... | .. | 7 14 0 |
| Street alignment No XXXVIII— Preliminary expenses ... .. . . | .. | 16 4 0 |
| Street alignment No XXXIX— Preliminary expenses .. ... .. . | ... | 30 0 0 |
| Street alignment No XL— Preliminary expenses ... ... ... . | ... | 79 6 0 |
| Street alignment No XLI— Preliminary expenses ... ... ... ... | ... | 88 7 0 |
| Street alignment No. XLII— Preliminary expenses .. ... ... ... ... | ... | 180 8 0 |
| Burrabazar alignment No I— Preliminary expenses ... .. ... ... | .. | 385 14 8 |
| Burrabazar alignment No II— Preliminary expenses .. ... ... ... | ... | 411 6 8 |
| Burrabazar alignment No. III— Preliminary expenses ... . ... ... | ... | 385 14 8 |
| | 1,000 | 4,429 8 11 |
| Total ... | 12,52,998 | 11,42,135 1 3 |
| Surplus on Revenue Account ... | ... | 2 48,02,487 9 10 |
| GRAND TOTAL ... | ... | 2,59,44,622 11 1 |

## Miscellaneous Suspense Items on 31st March 1922.

| Sundry debtors | Balance on 31st March 1921. | | During the year 1921-22 | | Total to 31st March 1922 | | Balance on 31st March 1922 | |
|---|---|---|---|---|---|---|---|---|
| | Credit | Debit | Credit | Debit | Credit | Debit | Credit | Debit |
| | Rs A P | Rs A P | Rs A P | Rs A P | Rs A P | Rs A P | Rs A P | Rs A P |
| 1. Advance to Land Acquisition Collector | | 3,48,098 12 9 | 81,92,909 0 3 | 89,73,815 1 11 | 81,92,909 0 3 | 93,20,913 14 8 | | 11,28,904 14 5 |
| 2 ,, for survey | | 1,04,020 6 8 | 2,813 6 10 | 63 0 0 | 2,813 6 10 | 1,04,083 6 8 | | 1,01,269 15 10 |
| 3 ,, to Corporation | | 2,64,869 1 3 | 1,23,588 6 5 | 43,537 12 0 | 1,23,588 6 5 | 3,08,406 13 3 | | 1,84,818 6 10 |
| 4 ,, for Council fees, etc | | 5,562 2 0 | 2,275 0 0 | 1,550 0 0 | 2,275 0 0 | 7,112 2 0 | | 4,837 2 0 |
| 5. ,, ,, Employees' Insurance | | 56 4 0 | 75 0 0 | 75 0 0 | 75 0 0 | 131 4 0 | | 56 4 0 |
| 6 Advance for purchase of motor cars | | 24,577 4 10 | 11,875 1 7 | 8,000 0 0 | 11,875 1 7 | 32,577 4 10 | | 20,702 3 3 |
| 7 Advance to contractors | | 32,290 15 10 | 83,023 3 8 | 1,70,350 10 8 | 83,023 3 8 | 2,02,641 10 6 | | 1,19,618 6 10 |
| 8. Advance to Bengal Telephone Company | | | | 50 0 0 | | 50 0 0 | | 50 0 0 |
| 9 Bank commission suspense | | 8 2 0 | 313 0 0 | 326 6 0 | 311 0 0 | 334 8 0 | | 21 8 0 |
| 10. Petty cash imprests | | 600 0 0 | | | | 600 0 0 | | 600 0 0 |
| 11 Interest on deposit for land purchase | | | | 175 8 0 | | 175 8 0 | | 175 8 0 |
| Outstanding Dues | | 92,478 7 6 | 91,251 15 3 | 1,18,720 8 6 | 91,251 15 3 | 2,11,199 0 0 | | 1,16,947 0 9 |
| Supply of stores | | 2,07,432 8 10 | 1,98,512 9 3 | 8,80,048 7 3 | 1,98,512 9 3 | 11,18,341 0 1 | | 6,49,828 6 10 |
| Total | | 11,39,904 1 8 | 90,08,736 11 3 | 1,01,96,612 6 1 | 90,08,736 11 3 | 1,13,36,556 8 0 | | 23,27,820 12 9 |

| Sundry creditors. | Balance on 31st March 1921 | | During the year 1921-22 | | Total to 31st March 1922 | | Balance on 31st March 1922 | |
|---|---|---|---|---|---|---|---|---|
| | Debit | Credit | Debit | Credit | Debit | Credit | Debit | Credit |
| | Rs A P | Rs A P | Rs A P | Rs A P | Rs A P | Rs A P | Rs A P | Rs A P |
| I Deposit of contractors— | | | | | | | | |
| (a) On Contract | | 32,424 8 0 | 31,837 0 0 | 30,862 6 0 | 31,837 0 0 | 63,286 14 0 | | 44,449 11 0 |
| (b) ,, Tenders | | 2,780 0 0 | 1,24,905 15 0 | 1,67,350 11 0 | 1,24,905 15 0 | 1,70,011 11 0 | | 45,129 12 0 |
| (c) ,, Retention money | | 1,13,521 6 0 | 2,80,225 12 6 | 2,78,980 8 [illegible] | 2,80,225 12 6 | 3,92,021 11 [illegible] | | 1,11,796 1 11 |
| Total | | 1,18,725 11 0 | 4,39,968 11 6 | 4,82,618 9 5 | 4,39,968 11 6 | 6,31,311 7 5 | | 1,91,375 11 11 |
| II Provident fund depositors' account | | 68,888 9 3 | 2,070 3 4 | 35,550 9 5 | 2,070 3 4 | 1,04,111 2 8 | | 1,02,373 15 5 |
| III. Tribunal provident fund | | 1,481 14 0 | 122 15 2 | 501 13 6 | 122 15 2 | 1,986 11 6 | | 1,863 12 4 |
| IV. (a) Income tax | | 1,707 12 5 | 17,819 6 10 | 17,929 13 2 | 17,819 6 10 | 19,637 9 7 | | 1,818 2 9 |
| (b) Interest on contractors securities | | 981 14 0 | 169 9 0 | 169 9 0 | 169 9 0 | 1,151 7 0 | | 981 14 0 |
| (c) Interest on employees' securities | | 261 7 3 | 499 9 3 | 238 2 0 | 499 9 3 | 499 9 3 | | |
| (d) Interest on deposit for exemption fees | | 175 8 0 | 2,023 12 0 | 2,998 12 0 | 2,023 12 0 | 4,171 4 0 | | 1,150 8 0 |
| (e) Deposit for Calcutta Corporation | | 466 7 7 | 714 7 11 | 692 10 10 | 714 7 11 | 1,159 2 5 | | 444 10 6 |
| (f) Miscellaneous depositors' account | | 31 12 0 | 813 14 3 | 1,184 0 3 | 814 14 3 | 1,215 12 3 | | 401 14 0 |
| (g) Unpaid bills | | 1,04,337 8 2 | 99,353 0 7 | 5,134 2 1 | 99,353 0 7 | 1,09,471 10 3 | | 10,118 9 8 |
| (h) Undisbursed salaries | | 719 7 4 | 1,070 5 0 | 1,312 10 2 | 1,070 5 0 | 2,032 1 6 | | 961 12 6 |
| (i) Work suspense | | 595 0 6 | | 799 2 0 | | 1,395 2 6 | | 1,395 2 6 |
| (j) Employees' suspense | | 57 10 3 | 57 10 3 | | 57 10 3 | 57 10 3 | | |
| (k) Deposit for stamp duty | | 53 8 0 | | | | 53 8 0 | | 53 8 0 |
| (l) Postal insurance premium | .. | 75 0 1 | 1,332 9 6 | 1,257 9 5 | 1,332 9 6 | 1,332 9 6 | | |
| (m) Deposit for exemption fees | .. | 315 7 0 | | | | 315 7 0 | | 315 7 0 |
| (n) Rent collection suspense | | | | 1 0 0 | | 1 0 0 | | 1 0 0 |
| (o) Deposit for sale of buildings | | 600 0 0 | | | | 600 0 0 | | 600 0 0 |
| (p) Hire of road rollers | | 69 11 9 | 3,917 4 5 | 4,477 6 7 | 3,917 4 5 | 4,547 2 4 | | 629 12 11 |
| (q) Sale of earth excavation area | .. | 4,197 8 0 | 4,197 8 0 | ... | 4,197 8 0 | 4,197 8 0 | | |
| Total | | 1,14,646 10 4 | 1,31,969 1 0 | 36,194 13 6 | 1,31,969 1 0 | 1,70,841 7 10 | | 18,872 6 10 |
| GRAND TOTAL | ... | 3,33,745 15 7 | 5,74,130 14 11 | 5,94,970 13 10 | 5,74,130 14 11 | 8,88,616 13 5 | | 3,14,485 14 6 |

***Vital Statistics of Towns with a population of 50,000 and over of the Bengal Presidency for the week ending Saturday, the 30th June 1923.***

| District. | No. | Towns. | Population under registration according to Census of 1921 | | | Births registered | | Deaths registered | | | | | | | | | | | | | | | | | | | | | | | | |
|---|---|---|---|---|---|---|---|---|---|---|---|---|---|---|---|---|---|---|---|---|---|---|---|---|---|---|---|---|---|---|---|---|
| | | | Male. | Female | Total. | Number registered (excluding still-births). | Still-born number registered. | Cholera | Small-pox. | Plague | Malaria | Enteric fever | Measles | Relapsing fever | Kala-azar | Other fevers | Dysentery. | Diarrhœa | Influenza | Pneumonia. | Phthisis. | Other respiratory diseases | Injuries including suicide | Deaths from child birth | Other causes | Total of all causes. Male | Total of all causes. Female | Total of all causes. Total. | Total of corresponding week of the previous year. Male. | Total of corresponding week of the previous year. Female. | Total of corresponding week of the previous year. Total. |
| Calcutta | 1 | Calcutta | 617,550 | 290,261 | 907 851 | 242 | 19 | 30 | | | 16 | 5 | | | 5 | 34 | 13 | 9 | 3 | 44 | 36 | 47 | 52 | | 142 | 245 | 190 | 438 | 219 | 175 | 394 |
| Burdwan | 2 | Asansol Mining Settlement. | 176,814 | 152,539 | 329,358 | 269 | 2 | | | | 2 | | | 2 | 1 | 10 | 3 | | | 13 | 1 | 15 | 6 | 3 | 90 | 79 | 67 | 146 | 78 | 58 | 136 |
| Howrah | 3 | Howrah | 128,442 | 66,229 | 195,301 | 76 | 4 | 6 | | | 4 | 7 | | 2 | | 15 | 3 | 8 | | 7 | 2 | 14 | 3 | 1 | 31 | 46 | 57 | 103 | 40 | 38 | 78 |
| Dacca | 4 | Dacca | 67,333 | 52,117 | 119,450 | 51 | 5 | | | | 1 | 1 | | | 4 | 18 | 5 | 1 | | 2 | | 1 | | | 21 | 31 | 23 | 54 | 26 | 28 | 54 |
| 24-Parganas | 5 | Maniktala | 40 996 | 26,376 | 67,372 | 7 | 1 | 1 | | | 3 | | | | | 3 | | 2 | 1 | 2 | 6 | 11 | 1 | | 14 | 25 | 21 | 46 | 6 | 1 | 7 |
| | 6 | Bhatpara | 45,723 | 19,886 | 65 609 | 12 | | | | | | | | | 1 | 4 | | | | | 1 | | | | 5 | 6 | 5 | 1 | 2 | 3 | 5 |
| | 7 | Cossipur-Chitpur | 36,289 | 20,185 | 56,474 | 12 | 3 | | | | 1 | | | | 1 | 3 | | 1 | | | 2 | 1 | 2 | | 6 | 11 | 6 | 17 | 7 | 13 | 20 |
| | 8 | Titagarh | 36,533 | 15,918 | 52,451 | 9 | 1 | | | | | | | | | 13 | | | | | | | | | | 9 | 4 | 13 | 7 | 8 | 15 |

CHAS. A. BENTLEY, *Director of Public Health, Bengal.*

CALCUTTA, *the 13th July 1923.*

**Vital statistics of Towns with a population of 50,000 and over of the Bengal Presidency for the week ending Saturday, the 7th July 1923.**

| District. | No. | Towns. | Population under registration according to census of 1921. | | | Births registered. | | Deaths registered | | | | | | | | | | | | | | | | | | | | | | | | |
|---|---|---|---|---|---|---|---|---|---|---|---|---|---|---|---|---|---|---|---|---|---|---|---|---|---|---|---|---|---|---|---|---|
| | | | Male | Female | Total. | Number registered (excluding still-births) | Still-born number registered | Cholera | Small-pox. | Plague | Malaria. | Enteric fever. | Measles. | Relapsing fever | Kala-azar | Other fevers. | Dysentery | Diarrhœa. | Influenza. | Pneumonia. | Phthisis. | Other respiratory diseases. | Injuries including suicide. | Deaths from child-birth | Other causes | Total of all causes. Male. | Total of all causes. Female. | Total of all causes. Total | Total of corresponding week of the previous year. Male. | Total of corresponding week of the previous year. Female. | Total of corresponding week of the previous year. Total. |
| Calcutta | 1 | Calcutta | 617,590 | 290,261 | 907,851 | 282 | 19 | 2 | 4 | | 15 | 6 | 1 | | 13 | 24 | 20 | 6 | | 45 | 41 | 49 | 14 | 2 | 160 | 260 | 178 | 438 | 211 | 164 | 375 |
| Burdwan | 2 | Asansol Mining Settlement | 176,814 | 152,539 | 329,353 | 135 | 1 | | | | 3 | | | 4 | | 2 | 1 | | | 12 | | 3 | 1 | | 55 | 39 | 53 | 92 | 63 | 50 | 113 |
| Howrah | 3 | Howrah | 129,472 | 66,829 | 195,501 | 53 | 5 | 8 | | | 5 | 2 | | | 1 | 15 | 4 | 6 | | 9 | 2 | 10 | | | 12 | 40 | 34 | 74 | 43 | 26 | 69 |
| Dacca | 4 | Dacca | 67,333 | 52,117 | 119,450 | 53 | 2 | | | | | | | | | 18 | 3 | 3 | | 2 | | | 2 | 1 | 18 | 26 | 21 | 47 | 19 | 24 | 43 |
| 24-Parganas | 5 | Maniktala | 40,996 | 26,376 | 67,372 | 23 | | | | | 6 | | | | | 1 | | | 1 | 3 | 1 | 2 | | | 9 | 14 | 10 | 24 | 30 | 28 | 58 |
| | 6 | Bhatpara | 45,723 | 19,886 | 65,609 | 18 | | 1 | | | 1 | | | | 1 | 3 | | | 1 | | | | 1 | | 4 | 6 | 6 | 12 | 3 | 7 | 10 |
| | 7 | Cossipur-Chitpur | 38,299 | 20,175 | 58,474 | 11 | | 2 | | | | | | | 2 | 4 | 1 | | | | | 2 | 1 | | 3 | 8 | 7 | 15 | [illegible] | 4 | 13 |
| | 8 | Titagarh | 36,533 | 15,918 | 52,451 | 5 | | | | | | | 1 | | | 2 | | 1 | | | 1 | | | | | 8 | 4 | 12 | 6 | 4 | 10 |

CHAS A. BENTLEY, *Director of Public Health, Bengal.*

CALCUTTA, *the 13th July 1923.*

***Statement of weekly gauge readings on the river Ganges at Rampur Boalia for the week ending 7th July 1923.***

| Date | Hour | Height of surface above zero of P W D datum. | Height of surface above P W D datum | Height of surface above P W D datum on the same date last year. | Remarks. |
|---|---|---|---|---|---|
| 1923 | | | | | |
| 1st July .. | 7 A M | 44 40 | 44 40 | 49 00 | P W. D datum 6 25 feet above Kidderpur Old Dock sill |
| 2nd " ... | 7 " | 44 70 | 44 70 | 49 40 | |
| 3rd " . | 7 " .. | 45 55 | 45 55 | 49 70 | |
| 4th " .. | 7 " ... | 46 35 | 46 35 | 50 00 | B M on Rajshahi College step 64 93. |
| 5th " ... | 7 " . | 46 70 | 46 70 | 50 30 | |
| 6th " ... | 7 " ... | 47 00 | 47 00 | 50 60 | Value of zero = 0 00 P. W D |
| 7th " ... | 7 " . | 47 20 | 47 20 | 51 00 | |

| | | Old value | According to P W. Datum |
|---|---|---|---|
| The previous year . | Highest water level | on 10th September 1922 | 61 75 |
| Ditto | Lowest " | on 1th May 1923 | 35 80 |
| Record | Highest " | 66 25 on 26th August 1879 | 61 41 |
| Do | Ditto " | 69 08 on 9th September 1885 | 64 27 |
| Do | Ditto " | 68 80 on 25th August 1906 | 63 17 |
| Do | Ditto " . | 68 21 on 26th August 1890 | 61 40 |
| Do | Lowest " | 37 63 on 29th April 1884 | 32 82 |
| Do | Ditto " . | 38 13 on 14th and 15th April 1883 | 33 32 |
| Do | Ditto " | 39 02 on 21st and 22nd April 1897 | 31 21 |
| Do | Ditto " | 39 28 on 6th and 7th May 1908 | 31 47 |
| Do | Ditto " | on 9th May 1922 | 31 70 |

*N B*—The gauge readings commenced from the 1st August 1887

JADAB CHANDRA GHOSH, for *Subdivisional Officer*,
*I. D, Jangipur.*

BOALIA, *the 7th July 1923.*

***Statement of weekly gauge-readings on the rivers Ganges and Brahmaputra at Goalundo for the week ending 7th July 1923.***

| Month and date | Hour | Height of surface above or below zero of gauge | Height of surface above mean sea level | Height of surface above mean sea level on same date last year | Remarks. |
|---|---|---|---|---|---|
| 1923 | | | | | |
| 1st July . | 7 A M | 20 2 | 20 2 | 19 5 | Zero is placed at mean sea-level. |
| 2nd " ... | 7 " | 20 2 | 20 2 | 19 9 | The bench mark for the gauge is on a pucca pillar between the passenger ghat and Chandpore ghat |
| 3rd " ... | 7 " | 20 3 | 20 3 | 20 0 | |
| 4th " ... | 7 " | 20·6 | 20 6 | 20 1 | |
| 5th " ... | 7 " | 20 9 | 20·9 | 20 4 | |
| 6th " ... | 7 " | 21 3 | 21 3 | 20 7 | Its reduced level is 26 84. |
| 7th " .. | 7 " | 21 5 | 21 5 | 21 0 | |

| | | |
|---|---|---|
| The previous year | Highest water-level | 24 6 on 16th August 1922 |
| Ditto | Lowest " | 4 3 on 14th March 1922 |
| Record (H F in Brahmaputra and Ganges) . | Highest " | 25 75 on 28th August 1906 |
| Record (average flood in Brahmaputra and Ganges) | Ditto " . | 25 74 on 20th and 21st August 1893 |
| Record (H F in Brahmaputra and Ganges) . | Ditto " | 25 66 on 11th to 17th and 31st August 1889 and on 1st to 3rd September 1889 |
| Record (H F in Brahmaputra only) .. . | Ditto " | 25 66 on 31st July 1900 |
| Record ... | Lowest " .. | 1 0 on 8th February 1914 |
| Do ... . | Ditto " | 2 42 on 13th March 1908 |
| Do .. .. | Ditto " | 2 91 on 21st to 24th February 1884 and 8th to 9th March 1884. |
| Do . . | Ditto " . | 3 16 on 9th to 11th March 1885 |
| Do . . | Ditto " .. | 3 16 on 16th, 17th and 29th to 31st March 1901 |

*N B*—The gauge-reading commenced from 3rd October 1909

R. C. GUHA, *Subdivisional Officer*,
*P. W. D., Faridpur.*

RAJBARI, *the 7th July 1923.*

## DISTRICT REPORTS ON WEATHER AND CROPS

For the week ending on the 11th July 1923.

[illegible].—Light to moderate rainfall was general. More rain is needed especially in the western districts for the growth of standing crops and for the transplantation of winter paddy seedlings which is proceeding slowly. Cutting and steeping of jute and harvesting of autumn paddy are progressing favourably. Standing crops are doing well on the whole. The average price of common rice for the province is slightly [illegible] compared with that of the previous week.

| Serial No. | District and subdivision. | Rainfall. | Price of common rice, in seers, per rupee. | | Character of the weather, condition of crops, etc. |
|---|---|---|---|---|---|
| | | | This week. | Previous week. | |
| 1 | 2 | 3 | 4 | 5 | 6 |
| | | Inches. | | | |
| 1 | 24-PARGANAS ... | 5·94 | 6¼ | 6¼ | Effects of weather on crops are good. Fodder and water are sufficient. |
| | Diamond Harbour. | 2·55 | 7 5/16 | 7 1/16 | |
| | Barrackpore ... | 6·27 | 6⅝ | 6⅝ | |
| | Barasat ... | 4·10 | 7 5/16 | 7 5/16 | |
| | Basirhat ... | 3·14 | 7½ | 7 1/16 | |
| 2 | NADIA ... | 3·78 | 7 1/16 | 7¼ | Weeding of *aus* paddy continues. More rain is needed. Some damage to jute by insects is reported from Sadar. Cattle-disease is reported from Ranaghat. |
| | Kushtia ... | 1·19 | 7½ | 7½ | |
| | Meherpur ... | 1·35 | 6¾ | 6¾ | |
| | Chuadanga .. | 2·19 | 7¼ | 7¼ | |
| | Ranaghat ... | 1·46 | 6½ | 6½ | |
| 3 | MURSHIDABAD | 0·34 | 7½ | 8½ | Weather cloudy. Prospects of *bhadoi* crops are not very favourable. Rain is badly wanted for winter paddy. Cattle-disease is reported from the Bharatpur thana in Kandi and Mirzapur thana in Jangipur. Fodder is sufficient. No large import or export. |
| | Lalbagh ... | 0·39 | 8 | 8 | |
| | Jangipur ... | 2·55 | 9 | 9 | |
| | Kandi ... | 0·87 | 9 | 9¼ | |
| 4 | JESSORE | 0·97 | 7½ | 7½ | Ploughing and weeding are progressing. Some damage to jute by insect-pests is reported from Bongaon and Jhenidah. More rain is wanted. Export of rice continues from Bongaon. Fodder and water are sufficient. |
| | Jhenidah ... | 1·62 | 8 | 8 | |
| | Magura ... | 0·77 | 7½ | 7½ | |
| | Narail ... | 0·93 | 7 | 7 | |
| | Bongaon ... | 3·59 | 8 | 8 | |
| 5 | KHULNA ... | 1·68 | 7½ | 7½ | Weather seasonable. Cattle-disease is reported from Pratapnagar beat-house. Fodder and water are sufficient. |
| | Satkhira ... | 3·27 | 8 | 8 | |
| | Bagerhat ... | 2·90 | 8 | 8 | |

| Serial No. | District and subdivision. | Rainfall. | Price of common rice, in seers per rupee. | | Character of the weather, condition of crops, etc. |
|---|---|---|---|---|---|
| | | | This week. | Previous week. | |
| 1 | 2 | 3 | 4 | 5 | 6 |
| | | Inches. | | | |
| 6 | BURDWAN ... | 3·93 | 7 | 7 | Weather hot and cloudy in the evening. The effects of weather have been fair to the seedlings of jute and sugarcane. For want of sufficient rain transplantation of the seedlings of *aman* paddy is being retarded. Prospects of standing crops are fair. Exports and imports of rice are as usual. Fodder and water are sufficient. |
| | Asansol ... | 4·86 | 6 | 6½ | |
| | Katwa ... | 0·96 | 8 | 8¾ | |
| | Kalna ... | 1·15 | 7¼ | 7¼ | |
| 7 | BIRBHUM ... | 0·62 | 8¾ | 9 | Weather hot. Rain is badly wanted. Paddy seedlings are withering for want of rain. Fodder and water are sufficient. |
| | Rampurhat ... | 0·60 | 8½ | 8½ | |
| 8 | BANKURA ... | 0·16 | 8 | 8 | Weather droughty. Transplantation of *aus* paddy is being retarded and that of *aman* paddy has commenced in places; more rain is urgently wanted for the operations. Condition of standing crops is fair. Export of rice and paddy continues. |
| | Vishnupur ... | 1·98 | 8 | 8½ | |
| 9 | MIDNAPORE ... | 1·20 | 8 | 8 11/16 | Transplantation of winter paddy continues. Condition of jute is favourable. Fodder is sufficient. Cattle-disease exists in Chandrakona thana. |
| | Contai ... | 2·02 | 8 | 8 | |
| | Tamluk ... | 3·10 | 6¾ | 6¾ | |
| | Ghatal ... | 5·63 | 8 | 7¾ | |
| | Jhargram ... | 0·50 | 9 | 8 | |
| 10 | HOOGHLY ... | 1·01 | 6¾ | 6¾ | The effects of weather are favourable Fodder is sufficient. The price of rice is steady. |
| | Serampore ... | 6·85 | 6¼ | 6¼ | |
| | Arambagh ... | 4·98 | 8½ | 8½ | |
| 11 | HOWRAH ... | 6·07 | 6½ | 6½ | The rain has been beneficial. Weeding of jute is going on. |
| | Uluberia ... | 5·81 | 7½ | 7½ | |
| 12 | RAJSHAHI (RAMPUR-BOALIA). ... | 0·83 | 7½ | 7½ | Rainfall moderate. Prospects of standing crops are fair. Fodder is sufficient. |
| | Naogaon ... | 1·43 | 6¾ | 6¾ | |
| | Nator ... | 1·93 | 6¼ | 7½ | |
| 13 | DINAJPUR ... | 2·30 | 8 | 8½ | Prospects of jute and other *bhadoi* crops are fair. Harvesting of jute has begun in Thakurgaon subdivision. Fodder and water are sufficient. |
| | Thakurgaon ... | 3·06 | 8½ | 8½ | |
| | Balurghat ... | 2·15 | 8 | 8 | |
| 14 | JALPAIGURI ... | 15·79 | 7 | 7 | Condition and prospects of *bhadoi* paddy and jute are not hopeful owing to excessive rain. |
| | Alipur ... | 6·98 | 6 | 6½ | |

| Serial No. | District and subdivision. | Rainfall. | Price of common rice, in seers, per rupee. This week. | Price of common rice, in seers, per rupee. Previous week. | Character of the weather, condition of crops, etc. |
|---|---|---|---|---|---|
| | 2 | 3 | 4 | 5 | 6 |
| | | Inches. | | | |
| 15 | DARJEELING ... | 5·40 | 5 | 5 | Maize, *marua* and paddy are progressing. Potatoes have been harvested. Fodder and water are sufficient. Cattle-disease exists at places. |
| | Kurseong ... | 10·37 | 6 | 6 | |
| | Siliguri ... | 12·95 | 7 | 7 | |
| | Kalimpong ... | 6·98 | 5¾ | 5¾ | |
| 16 | RANGPUR ... | 0·43 | 7½ | 7 | The prospects of jute are fair. Weather has been favourable to the jute crop. There has been no damage to the crop. Harvesting continues. Fodder and water are sufficient. |
| | Nilphamari ... | 1·06 | 7½ | 7 | |
| | Kurigram ... | 0·73 | 7½ | 7½ | |
| | Gaibandha ... | 0·72 | 7 | 7½ | |
| 17 | BOGRA ... | 2·29 | 7½ | 7½ | Harvesting of jute and transplantation of *aman* seedlings continue. More rain is wanted. Cattle-disease is reported from Jaipurhat thana. |
| 18 | PABNA ... | 2·75 | 7½ | 7½ | Prospects of jute and *aus* paddy are good. Prices of rice are stationary, but the rice market has a tendency to rise. Agricultural stock is sufficient. |
| | Sirajganj ... | 0·59 | 6¾ | 6¾ | |
| 19 | MALDA ... | 2·29 | 8 | 8 | Prospects of standing crops including jute are fair. More rain is wanted for transplantation of winter paddy. |
| 20 | COOCH BEHAR | 5·83 | 8 | 8 | Weather seasonable. Transplantation of *hai-manti* paddy and harvesting of *bitri* paddy are going on. Condition of standing crops is fair. Fodder is sufficient. Outbreak of cattle-disease and cholera is reported from the interior. |
| 21 | DACCA ... | 1·23 | 7 | 7½ | Weather seasonable. Prospects of paddy and jute are fair. Harvesting of *aus* rice and summer *til* is progressing. Rice market has a tendency to rise. Fodder and water are sufficient. |
| | Manikganj ... | 1·31 | 7¾ | 7½ | |
| | Narayanganj ... | 1·21 | 7½ | 7½ | |
| | Munshiganj (a) | 2·12 | 7 | 7 | |
| 22 | MYMENSINGH ... | 1·41 | 7 | 7 | Weather seasonable. Harvesting of jute and transplantation of *aus* paddy continue. Early gathering of jute has commenced. The price of rice is generally steady. Prospects of standing crops are good. Fodder and water are sufficient and available. |
| | Jamalpur ... | 0·59 | 7½ | 7½ | |
| | Tangail ... | 0·86 | 6¾ | 6¾ | |
| | Netrakona ... | 1·82 | 7¾ | 7 | |
| | Kishorganj ... | 1·02 | 7 | 7 | |

(a) Munshiganj being very near to Dacca and Narayanganj, its rainfall statistics are not quoted. To give information regarding the northern part of the district, rainfall figures for Kaptanthana are reported here.

| District No. | District and subdivision. | Rainfall. | Price of common rice, in seers per rupee. | | Character of the weather, condition of crops, etc. |
|---|---|---|---|---|---|
| | | | This week. | Previous week. | |
| 1 | 2 | 3 | 4 | 5 | 6 |
| | | Inches. | | | |
| 23 | FARIDPUR ... | 2·84 | 8 | 7½ | Weeding of jute and paddy is almost finished. Prospects and state of standing crops are favourable. Fodder is sufficient. |
| | Goalundo (Rajbari). | 2·46 | 7½ | 7½ | |
| | Madaripur ... | 1·49 | 8 | 8 | |
| | Gopalganj (a) ... | 1·41 | 7 | 7 | |
| 24 | BAKARGANJ (BARISAL). | 2·83 | 8 | 8 | Weather seasonable. Prospects of standing crops are good. Fodder and water are sufficient. |
| | Pirojpur ... | 2·48 | 7 | 7 | |
| | Patuakhali ... | 4·45 | 7 | 7 | |
| | Dakshin Shahbaspur (Bhola). | 3·49 | 7½ | 7½ | |
| 25 | CHITTAGONG ... | 1·94 | 6½ / 6½* | 6½ / 6½* | Weather seasonable. Prospects of standing crops are good. Transplantation of *aus* paddy is in progress. Sowing of *aman* paddy continues. Water and fodder are sufficient. *Punga* salt is selling at 11 seers per rupee at Sadar subdivision and 8 seers at Cox's Bazar. |
| | Cox's Bazar ... | 6·08 | 7 | 7 | |
| 26 | TIPPERA (COMILLA). | 3·11 | 7⅛ | 7¾ | Weather cloudy and rainy. Prospects of standing crops are good. Cattle-disease is reported from Brahmanbaria subdivision. |
| | Brahmanbaria | 0·31 | 6 23/32 | 6 23/32 | |
| | Chandpur ... | 4·78 | 6⅔ | 6⅔ | |
| 27 | NOAKHALI ... | 7·74 | 6 | 6½ | Weather seasonable. Prospects of standing crops are good. Fodder and water are sufficient. |
| | Feni ... | 2·17 | 6½ | 7½ | |
| 28 | CHITTAGONG HILL TRACTS. | 2·09 | 7 | 7 | Weather seasonable. Fodder and water are sufficient. |
| 29 | TRIPURA STATE | 1·66 | 8 | 7½ | Weather seasonable. Ploughing for and transplantation of *aus* crops and weeding of *jhum* crops are going on. Fodder and water are sufficient. Prospects of crops are fair. Cleaned cotton is selling at Rs. 30 to Rs. 35 and jute at Rs. 7 to Rs. 10. Condition of cattle is good except at Sadar and Belonia. |

* Bazar rice.

(a) The rainfall at Madaripur, which is very near to Gopalganj, is shown here.

J. C. ROY, for *Director of Agriculture, Bengal.*

Dated the 14th July, 1922.

***Wholesale prices current of food-grains, salt, etc., in the undermentioned marts of Bengal for the second half of June 1923.***

| Marts | PADDY, LOCAL (BEST QUALITY) | | | PADDY, LOCAL (COMMON QUALITY) | | | RICE, LOCAL (BEST QUALITY). | | |
|---|---|---|---|---|---|---|---|---|---|
| | Present return | Next preceding return | Corresponding return of last year | Present return | Next preceding return | Corresponding return of last year. | Present return | Next preceding return | Corresponding return of last year |
| 1 | 2 | 3 | 4 | 5 | 6 | 7 | 8 | 9 | 10 |
| | Rs A P | Rs A P | Rs A P | Rs A P | Rs A P | Rs A P | Rs A P | Rs A P | Rs A P |
| Calcutta | 3 14 0 | 3 14 0 | 4 12 0 | 3 4 0 | 3 4 0 | 4 8 0 | 9 4 0 | 9 4 0 | 9 8 0 |
| Burdwan | 2 12 0 | 2 12 0 | (a) | 2 10 0 | 2 10 0 | 3 13 0 | 8 0 0 | 8 0 0 | 9 0 0 |
| Raniganj | | | | | | | | | |
| Midnapore | 2 4 0 | 2 11 0 | 3 10 0 | 1 15 0 | 2 4 0 | 3 3 0 | 6 8 0 | 6 8 0 | 8 0 0 |
| Chittagong | 3 0 0 | 3 0 0 | 4 8 0 | 2 12 0 | 2 12 0 | 3 8 0 | 8 0 0 | 8 0 0 | 10 0 0 |
| Dacca | 3 4 0 | 3 4 0 | 4 0 0 | 3 0 0 | 3 2 0 | 3 10 0 | 6 0 0 | 6 4 0 | 8 0 0 |
| Pabna | 3 3 0 | 3 3 0 | 3 14 0 | 3 0 0 | 3 0 0 | 3 12 0 | 7 8 0 | 7 8 0 | 8 0 0 |
| Rangpur | 3 8 0 | 3 8 0 | 3 12 0 | 3 4 0 | 3 4 0 | 3 0 0 | 7 8 0 | 7 8 0 | 7 8 0 |
| Sirajganj (Pabna) | | | | | | | | | |
| Sarisabari (Mymensingh) | | | | | | | | | |
| Narayanganj (Dacca) | | | | | | | | | |

| Marts | RICE, LOCAL (COMMON QUALITY) | | | WHEAT | | | KALAI DAL | | |
|---|---|---|---|---|---|---|---|---|---|
| | Present return | Next preceding return | Corresponding return of last year | Present return | Next preceding return | Corresponding return of last year | Present return | Next preceding return | Corresponding return of last year |
| | 11 | 12 | 13 | 14 | 15 | 16 | 17 | 18 | 19 |
| | Rs. A P | Rs A P | Rs A P | Rs A P | Rs A P | Rs A P | Rs A P | Rs A P | Rs A P |
| Calcutta | 7 0 0 | 7 0 0 | 8 0 0 | 4 12 0 | 4 12 0 | 5 8 0 | 6 4 0 | 6 4 0 | 6 0 0 |
| Burdwan | 5 8 0 | 5 8 0 | 6 14 0 | (a) | (a) | 7 0 0 | 8 0 0 | 8 0 0 | 7 8 0 |
| Raniganj | | | | | | | | | |
| Midnapore | 4 10 0 | 4 10 0 | 6 4 0 | (c) | (c) | (a) | 7 4 0 | 7 4 0 | 8 8 0 |
| Chittagong | 6 4 0 | 6 0 0 | 6 12 0 | | | | | | |
| Dacca | 5 0 0 | 5 4 0 | 6 8 0 | 6 12 0 | 6 8 0 | 7 0 0 | 4 8 0 | 5 0 0 | 5 0 0 |
| Pabna | 5 4 0 | 5 2 0 | 6 12 0 | 4 0 0 | 4 0 0 | 6 8 0 | 7 0 0 | 7 0 0 | 7 4 0 |
| Rangpur | 6 12 0 | 6 12 0 | 5 12 0 | 8 0 0 | 8 0 0 | 7 8 0 | | | |
| Sirajganj (Pabna) | | | | | | | | | |
| Sarisabari (Mymensingh). | | | | | | | | | |
| Narayanganj (Dacca). | | | | | | | | | |

(a) Not available.
(c) No transaction.

***Wholesale prices-current of food-grains, salt, etc., in the undermentioned marts of Bengal for the Second-half of June 1923.***

| Marts | Gram | | | Arhar Dal. | | | Linseed. | | |
|---|---|---|---|---|---|---|---|---|---|
| | Present return. | Next preceding return. | Corresponding return of last year. | Present return | Next preceding return | Corresponding return of last year | Present return. | Next preceding return. | Corresponding return of last year. |
| | 20 | 21 | 22 | 23 | 24 | 25 | 26 | 27 | 28 |
| | Rs A. P. | Rs A P | Rs A P | Rs A. P. | Rs A P | Rs. A P | Rs A. P | Rs A. P | Rs. A P |
| Calcutta | 4 12 0 | 5 0 0 | 5 12 0 | 7 0 0 | 7 4 0 | 8 8 0 | 9 8 0 | 9 8 0 | 11 8 0 |
| Burdwan | 4 0 0 | 4 0 0 | 6 0 0 | 5 8 0 | 5 8 0 | 8 0 0 | (a) | (a) | (a) |
| Raniganj | | | | | | | | | |
| Midnapore | 4 8 0 | 4 8 0 | 7 6 0 | 7 0 0 | 7 0 0 | 10 8 0 | 7 8 0 | 7 8 0 | 8 12 0 |
| Chittagong | 5 0 0 | 5 0 0 | 6 8 0 | 7 8 0 | 7 8 0 | 10 0 0 | 16 0 0 | 16 0 0 | 10 0 0 |
| Dacca | 5 0 0 | 6 0 0 | 7 8 0 | 7 8 0 | 8 0 0 | 10 0 0 | 10 0 0 | 10 0 0 | 8 0 0 |
| Pabna | 3 10 0 | 3 12 0 | 6 0 0 | 9 0 0 | 9 0 0 | 11 0 0 | 7 12 0 | 8 0 0 | 8 12 0 |
| Rangpur | 7 4 0 | 7 4 0 | 7 0 0 | 8 8 0 | 8 8 0 | 9 0 0 | (a) | (a) | |
| Serajganj (Pabna) | | | | | | | | | |
| Sarisabari (Mymensingh) | | | | | | | | | |
| Narayanganj (Dacca) | | | | | | | | | |

| Marts. | Mustard | | | Gur | | | Cotton (uncinned). | | |
|---|---|---|---|---|---|---|---|---|---|
| | Present return | Next preceding return | Corresponding return of last year | Present return | Next preceding return | Corresponding return of last year | Present return | Next preceding return. | Corresponding return of last year. |
| | 29 | 30 | 31 | 32 | 33 | 34 | 35 | 36 | 37 |
| | Rs A P | Rs A P | Rs. A P | Rs. A P | Rs A P | Rs. A. P | Rs A. P. | Rs A P | Rs A |
| Calcutta | 9 8 0 | 9 12 0 | 10 0 0 | 9 0 0 | 8 12 0 | 8 0 0 | 12 0 0 to 15 0 0 | 12 0 0 to 15 0 0 | 26 0 |
| Burdwan | 8 8 0 to 9 8 0 | 8 8 0 to 9 8 0 | 8 12 0 to 10 4 0 | 8 0 0 | 8 0 0 | 7 0 0 to 10 0 0 | | | |
| Raniganj | | | | | | | | | |
| Midnapore | 8 8 0 to 9 8 0 | 8 8 0 to 9 8 0 | 10 12 0 to 12 0 0 | 12 0 0 | 12 0 0 | 10 8 0 | | | |
| Chittagong | 10 0 0 | 10 0 0 | 9 0 0 | 9 8 0 to 12 0 0 | 9 8 0 to 12 0 0 | 10 8 0 | | | |
| Dacca | 8 0 0 | 7 8 0 | 9 0 0 | 12 0 0 | 12 8 0 | 12 0 0 | | | |
| Pabna | 7 8 0 | 7 12 0 | 9 0 0 | 8 8 0 | 8 8 0 | 8 4 0 | | | |
| Rangpur | 8 6 0 | 8 6 0 | 8 0 0 | 8 8 0 | 8 4 0 | 7 0 0 | | | |
| Serajganj (Pabna) | | | | | | | | | |
| Sarisabari (Mymensingh). | | | | | | | | | |
| Narayanganj (Dacca). | | | | | | | | | |

(a) Not reported. (a) Not available.

***Wholesale prices-current of food-grains, salt, etc., in the undermentioned marts of Bengal for the second-half of June 1923.***

| Marts | JUTE | | | GHEE. | | | HIDE (COW) | | |
|---|---|---|---|---|---|---|---|---|---|
| | Present return | Next preceding return | Corresponding return of last year | Present return | Next preceding return | Corresponding return of last year | Present return | Next preceding return | Corresponding return of last year |
| | 38 | 39 | 40 | 41 | 42 | 43 | 44 | 45 | 46 |
| | Rs. A. P. | Rs. A. P. | Rs. A. P. | Rs. A. P. | Rs. A. P. | Rs. A. P. | Rs. A. P. | Rs. A. P. | Rs. A. P. |
| Calcutta | (1) (c)<br>(2) (c)<br>(3) 11 0 0 | (1) (c)<br>(2) (c)<br>(3) 11 0 0 | (1) 17 0 0<br>(2) 16 0 0<br>(3) 12 2 0 | 93 0 0 | 90 0 0 | 88 0 0 | 237 8 0* | 237 8 0* | 295 0 0* |
| Burdwan | | | | | | | | | |
| Raniganj | | | | | | | | | |
| Midnapore | | | | | | | | | |
| Chittagong | | | | | | | | | |
| Dacca | | | | | | | | | |
| Pabna | | | | | | | | | |
| Rangpur | | | | | | | | | |
| Serajganj (Pabna) | 8 2 0 | (c) | 9 0 0 to 11 0 0 | | | | | | |
| Sarisabari (Mymensingh) | 8 8 0 to 11 0 0 | 10 0 0 to 12 0 0 | (a) | | | | | | |
| Narayanganj (Dacca). | 8 0 0 to 10 8 0 | 8 8 0 to 10 8 0 | 10 0 0 to 14 0 0 | | | | | | |

(1) Price of pat fours.
(2) Price of district fours
(3) Weighted average price

| Marts. | IRON | | | SALT | | | KEROSINE OIL | | |
|---|---|---|---|---|---|---|---|---|---|
| | Present return | Next preceding return | Corresponding return of last year | Present return | Next preceding return | Corresponding return of last year | Present return | Next preceding return | Corresponding return of last year. |
| | 47 | 48 | 49 | 50 | 51 | 52 | 53 | 54 | 55 |
| | Rs A. P | Rs A P | Rs A P | Rs A P | Rs A P | Rs A P | Rs A P | Rs. A. P. | Rs A. P. |
| Calcutta | (a)<br>11 0 0 to 13 0 0 | (a)<br>11 0 0 to 13 0 0 | (a) | 3 6 0* | 3 8 0 | 235 0 0† | Swan<br>5 14 0<br>Rising sun<br>7 5 0<br>Elephant<br>7 7 0 | Swan<br>5 14 0<br>Rising sun<br>7 5 0<br>Elephant<br>7 7 0 | Swan<br>5 14 0<br>Rising sun<br>7 5 0 |
| Burdwan | | | | | | | | | |
| Rangpur | | | | | | | | | |
| Midnapore | | | | | | | | | |
| Chittagong | | | | | | | | | |
| Dacca | | | | | | | | | |
| Pabna | | | | | | | | | |
| Raniganj | | | | | | | | | |
| Serajganj (Pabna). | | | | | | | | | |
| Sarisabari (Mymensingh). | | | | | | | | | |
| Narayanganj (Dacca). | | | | | | | | | |

* Per maund. † Per 100 maunds. (a) British mild steel per cwt. (c) No transaction.

***Wholesale prices-current of food-grains, salt, etc., in the undermentioned marts of Bengal for the second half of June 1923.***

| Marts. | MUSTARD OIL. | | | FIREWOOD. | | | COAL (BENGAL). | | |
|---|---|---|---|---|---|---|---|---|---|
| | Present return | Next preceding return. | Corresponding return of last year | Present return | Next preceding return | Corresponding return of last year | Present return | Next preceding return | Corresponding return of last year. |
| | 56 | 57 | 58 | 59 | 60 | 61 | 62 | 63 | 64 |
| | Rs. A. P. | Rs. A. P. | Rs. A. P. | Rs. A. P. | Rs. A. P. | Rs. A. P. | Rs. A. P. | Rs. A. P. | Rs. A. P. |
| Calcutta .. | (x) | (x) | 25 0 0 | 0 12 0 | 0 11 6 | 0 9 6 | (x) | (x) | |
| Burdwan | | | | | | | | | |
| Raniganj . | | | | | | | 0 4 0 | 0 4 0 | 0 4 6 |
| Midnapore | | | | | | | | | |
| Chittagong .. | | | | | | | | | |
| Dacca | | | | | | | | | |
| Pabna | | | | | | | | | |
| Rangpur | | | | | | | | | |
| Serajganj (Pabna) | | | | | | | | | |
| Sarisabari (Mymensingh) | | | | | | | | | |
| Narayanganj (Dacca) | | | | | | | | | |

(x) Not reported.

J. C. ROY, for *Director of Agriculture, Bengal*

DACCA, *the 12th July 1923*

***Prices-current (retail) of food-grains, salt, etc., in the districts of Bengal for the second-half of June 1923.***

| Division | Number. | Districts and Marts | Common rice. Average. Present return. | Common rice. Average. Next preceding return | Common rice. Average. Corresponding return of last year. | Common rice. Cheapest. Present return. | Common rice. Cheapest. Next preceding return | Common rice. Cheapest. Corresponding return of last year. | Kalai dal (*Phaseolus radiatus*). Present return | Kalai dal (*Phaseolus radiatus*). Next preceding return | Kalai dal (*Phaseolus radiatus*). Corresponding return of last year | Arhar dal or Thur Cajan pea (*Cajanus indicus*). Present return. | Arhar dal or Thur Cajan pea (*Cajanus indicus*). Next preceding return | Arhar dal or Thur Cajan pea (*Cajanus indicus*). Corresponding return of last year | Salt. Present return | Salt. Next preceding return | Salt. Corresponding return of last year |
|---|---|---|---|---|---|---|---|---|---|---|---|---|---|---|---|---|---|
| | | | S. Ch. | S. Ch. | S. Ch. | S. Ch. | S. Ch. | S. Ch. | S. Ch. | S. Ch. | S. Ch. | S. Ch. | S. Ch. | S. Ch. | S. Ch. | S. Ch. | S. Ch. |
| | | **24 Parganas.** | | | | | | | | | | | | | | | |
| Presidency | 1 | Chetla Hát | 6 4 | 6 0 | 5 0 | 7 8 | 7 0 | 6 8 | 6 0 | 6 0 | 4 8 | 5 0 | 5 0 | 4 0 | {10 0 / 9 8* | 10 0 / 9 8* | 10 0 |
| | 2 | Magra Hát | 6 10 | 9 8 | 5 2 | 7 4 | 9 0 | 5 11 | (a) | (a) | (a) | 6 10 | 5 0 | 4 1 | 10 5 | 11 6 | 10 0 |
| | 3 | Calcutta Bellaghata | 5 5 | 5 5 | 4 11 | 8 0 | 8 4 | 7 0 | 5 15 | 5 15 | 6 2 | 5 5 | 5 3 | 4 7 | 8 0† | 8 0† | 10 0 |
| | | **Nadía** | | | | | | | | | | | | | | | |
| | 4 | Goari | 7 12 | 7 4 | 6 13 | 7 12 | 7 3 | 7 1 | 4 9 | 4 9 | 4 11 | 5 5 | 5 5 | 4 0 | 9 0† | 9 0† | 10 11 |
| | 5 | Ranaghat | 6 5 | 6 8 | 5 4 | 7 6 | 7 0 | 5 12 | 4 8 | 4 8 | 4 8 | 4 8 | 4 8 | 4 0 | 9 0† | 9 0† | 10 8 |
| | | **Murshidabad** | | | | | | | | | | | | | | | |
| | 6 | Berhampore | 8 0 | 8 0 | 8 0 | 8 4 | 8 4 | 6 8 | 5 12 | 5 12 | 5 5 | 8 8 | 8 8 | 5 5 | {10 0 / 8 0 | 9 0 / 8 0 | 12 0 |
| | 7 | Kandi | 9 4 | 9 4 | 6 8 | 9 8 | 9 8 | 6 12 | 5 8 | 5 8 | 5 12 | 8 0 | 6 0 | 5 8 | 9 8† | 9 8† | 12 0 |
| | 8 | Jangipur | 9 12 | 9 2 | 6 0 | 9 0 | 9 4 | 6 2 | 4 10 | 4 10 | 4 4 | 6 8 | 6 8 | 5 0 | 10 0† | 9 4* | 13 0 |
| | | **Jessore.** | | | | | | | | | | | | | | | |
| | 9 | Sadar | 7 0 | 7 8 | 6 6 | 8 0 | 8 0 | 6 12 | 5 0 | 4 0 | 3 4 | 4 8 | 4 9 | 3 4 | 9 0 / 8 8* | {8 0 / 8 8* | }11 0 |
| | 10 | Bongaon | 6 6 | 7 4 | 5 8 | 8 0 | 8 0 | 6 8 | 3 12 | 3 8 | 3 4 | 4 8 | 4 8 | 4 0 | 9 0† | 9 0† | 9 0 |
| | | **Khulna** | | | | | | | | | | | | | | | |
| | 11 | Sadar | 7 12 | 8 0 | 6 8 | 8 12 | 9 0 | 7 8 | 6 0 | 6 8 | 5 0 | 4 0 | 4 0 | 4 0 | 8 4† | 8 4† | 8 0 |
| | 12 | Bagerhat | 8 0 | 8 0 | 6 8 | 8 4 | 8 4 | 8 0 | 7 0 | 7 0 | 5 8 | 4 4 | 4 4 | 3 8 | 8 0† | 8 0† | 8 0 |
| Burdwan. | | **Burdwan** | | | | | | | | | | | | | | | |
| | 13 | Sadar | 7 8 | 7 8 | 5 13 | 9 0 | 9 0 | 6 4 | 5 8 | 5 8 | 5 0 | 8 0 | 8 0 | 4 4 | 9 8 | 9 8 | 14 0* |
| | 14 | Kalna | 7 4 | 7 4 | 5 5 | 8 0 | 8 0 | 5 13 | 5 5 | 5 0 | 5 8 | 5 0 | 5 0 | 4 3 | 8 14† | 8 14† | 14 8 |
| | | **Birbhum** | | | | | | | | | | | | | | | |
| | 15 | Suri | 8 0 | 8 0 | 6 0 | 9 0 | 9 0 | 6 4 | 5 4 | 5 4 | 5 6 | 5 8 | 5 8 | 4 0 | 10 0* | 10 0* | 10 8 |
| | 16 | Rampur Hát | 8 8 | 8 8 | 6 0 | 9 0 | 9 0 | 6 4 | 5 8 | 5 8 | 5 0 | 6 0 | 6 0 | 4 0 | 10 0† | 10 0† | 11 0 |
| | | **Bankura** | | | | | | | | | | | | | | | |
| | 17 | Sadar | 8 0 | 8 0 | 6 0 | 8 12 | 8 8 | 6 12 | 6 8 | 6 8 | 6 4 | 6 8 | 6 8 | 4 0 | {10 0 / 11 0* | 11 0 / 12 0* | }11 0 |
| | 18 | Vishnupur | 8 0 | 8 2 | 5 5 | 9 0 | 9 8 | 6 4 | 7 0 | 7 8 | 4 0 | 6 8 | 6 8 | 4 0 | {9 8 / 10 0* | 9 0 / 10 0* | }10 0 |
| | | **Midnapore** | | | | | | | | | | | | | | | |
| | 19 | Sadar | 8 6 | 8 6 | 6 8 | 8 11 | 8 11 | 6 14 | 5 4 | 5 4 | 4 0 | 5 4 | 5 4 | 3 8 | {9 0* / 8 0 | 9 0 / 8 0* | } 8 0 |
| | 20 | Contai | 7 8 | 9. 0 | 7 0 | 9 4 | 10 0 | 7 8 | 5 8 | 5 8 | 4 8 | 6 4 | 5 8 | 4 0 | 9 8 | 9 0 | 9 0 |
| | | **Hooghly** | | | | | | | | | | | | | | | |
| | 21 | Sadar | 7 0 | 6 8 | 5 0 | 8 0 | 7 4 | 6 0 | 5 0 | 5 8 | 5 6 | 5 4 | 6 4 | 4 0 | {10 0 / 9 12 | 10 0 / 9 12* | }12 0 |
| | 22 | Arambagh | 8 8 | 8 8 | 6 4 | 9 0 | 9 0 | 6 8 | 4 4 | 4 4 | 4 0 | 4 0 | 4 0 | 3 4 | {8 12 / 8 4* | 8 4 / 8 0* | }8 10 |
| | | **Howrah** | | | | | | | | | | | | | | | |
| | 23 | Sadar | 6 8 | 6 8 | 5 8 | 8 0 | 8 0 | 6 8 | 6 0 | 6 0 | 5 8 | 5 8 | 5 8 | 4 8 | {11 0 / 10 0* | 11 0 / 10 0* | }10 0 |
| | 24 | Uluberia | 7 0 | 7 0 | 5 8 | 7 8 | 7 8 | 6 4 | 5 8 | 5 10 | 5 6 | 5 8 | 5 6 | 4 0 | {10 0 / 9 6* | }9 6* | 10 10 |
| Rajshahi. | | **Rajshahi.** | | | | | | | | | | | | | | | |
| | 25 | Rampur-Boalia | 7 8 | 7 4 | 6 0 | 7 14 | 7 8 | 6 12 | 5 0 | 5 0 | 6 0 | 6 12 | 7 4 | 4 14 | 8 4† | {9 0 / 9 0* | }9 12 |
| | 26 | Nator | 7 2 | 7 2 | 5 8 | 7 8 | 7 8 | 6 6 | 4 14 | 4 14 | 5 4 | 6 0 | 6 0 | 4 0 | 8 1† | 8 1† | 9 12* |
| | 27 | Dinajpur—Railway Bazar Hát. | 8 2 | 8 8 | 6 14* | 8 4 | 9 0 | 7 3 | 5 2 | 5 2 | 4 12 | 5 6 | 5 6 | 3 9 | 8 0† | 8 0† | 9 0 |
| | 28 | Jalpaiguri—Sadar | 7 0 | 7 0 | 7 0 | 8 0 | 8 0 | 7 8 | 6 0 | 5 8 | 5 8 | 5 8 | 5 8 | 4 0 | 9 0† | 9 0† | 9 0* |

* Karkash. | (a) Not available. | (n) Not reported.

*N. B.*—The price of karkash and Liverpool salt tally with each other in marts marked †.

***Prices-current (retail) of food-grains, salt, etc., in the districts of Bengal for the second half of June 1923.***

| Division | Number | Districts and Marts. | Common rice — Average — Present return | Common rice — Average — Next preceding return | Common rice — Average — Corresponding return of last year | Common rice — Cheapest — Present return | Common rice — Cheapest — Next preceding return | Common rice — Cheapest — Corresponding return of last year | Kalai dal (*Phaseolus radiatus*) — Present return | Kalai dal — Next preceding return | Kalai dal — Corresponding return of last year | Arhar dal or Thor Cadjan Pea (*Cajanus indicus*) — Present return | Arhar dal — Next preceding return | Arhar dal — Corresponding return of last year | Salt — Present return | Salt — Next preceding return | Salt — Corresponding return of last year |
|---|---|---|---|---|---|---|---|---|---|---|---|---|---|---|---|---|---|
| | | | Quantity per rupee in seers of eighty tolas. | | | | | | | | | | | | | | |
| | | | S. Ch. | S. Ch. | S. Ch. | S. Ch. | S. Ch. | S. Ch. | S. Ch. | S. Ch. | S. Ch. | S. Ch. | S. Ch. | S. Ch. | S. Ch. | S. Ch. | S. Ch. |
| | | **Darjeeling** | | | | | | | | | | | | | | | |
| Rajshahi | 29 | Sadar | 6 4 | 6 4 | 5 12 | 6 8 | 6 8 | 6 8 | 4 0 | 4 0 | 3 4 | 3 4 | 3 4 | 2 12 | 7 0<br>9 0* | 7 0<br>9 0* | 6 8 |
| | 30 | Siliguri | 7 0 | 7 0 | 5 0 | 8 0 | 8 0 | 7 0 | 4 0 | 4 0 | 4 0 | 4 0* | 4 0 | 4 0 | 8 0† | 8 0† | 8 0 |
| | | **Rangpur** | | | | | | | | | | | | | | | |
| | 31 | Sadar | 6 8 | 6 8 | 7 0 | 7 0 | 7 0 | 8 0 | 6 8 | 6 8 | 4 8 | 4 8 | 4 8 | 4 8 | 8 0*<br>7 0 | 8 0*<br>7 0 | 8 0 |
| | 32 | Nilphamari | 7 0 | 7 8 | 8 0 | (a) | (a) | (a) | 4 8 | 4 8 | 4 0 | 4 8 | 4 8 | 4 0 | 6 0*<br>8 0 | 8 0<br>8 0 | 10 0 |
| | 33 | Bogra—Sadar | 7 8 | 7 14 | 6 14 | 7 14 | 8 4 | 7 4 | 4 0 | 4 0 | 4 0 | 4 8 | 4 8 | 4 0 | 8 4†<br>9 0* | 8 4<br>9 0* | 8 8 |
| | | **Pabna** | | | | | | | | | | | | | | | |
| | 34 | Sadar | 7 4 | 7 4 | 5 12 | 7 8 | 7 8 | 6 2 | 5 4 | 5 4 | 5 8 | 4 0 | 4 0 | 3 8 | 7 0<br>8 0* | 7 0†<br>8 0* | 11 0* |
| | 35 | Sirajganj | 6 12 | 6 12 | 6 0 | 7 5 | 7 8 | 6 8 | 6 0 | 6 0 | 6 0 | 4 12 | 4 12 | 3 12 | 8 0† | 8 0† | 10 11 |
| | | **Malda** | | | | | | | | | | | | | | | |
| | 36 | Sadar | 7 8 | 7 8 | 6 0 | 8 0 | 8 0 | 6 4 | 5 0 | 4 8 | 6 0 | 6 0 | 5 0 | 5 0 | 9 0<br>9 0* | 8 0<br>9 0* | 8 0 |
| | 37 | Balia-Nawabganj | 7 8 | 8 0 | 6 4 | 8 7 | 8 4 | 6 8 | 5 8 | 5 0 | 7 0 | 6 4 | 5 8 | 5 8 | 9 0* | 8 0<br>9 0* | 9 0 |
| | | **Dacca** | | | | | | | | | | | | | | | |
| Dacca | 38 | Sadar | 8 0 | 7 8 | 6 0 | 9 0 | 8 4 | 7 0 | 8 0 | 8 0 | 8 0 | 6 0 | 6 0 | 4 0 | 8 0 | 9 0 | 10 0 |
| | 39 | Mirkadim | 7 0 | 7 0 | 5 12 | 8 4 | 8 0 | 6 4 | (a) | (a) | (a) | (a) | (a) | (a) | 12 0<br>10 10* | 12 0<br>10 10* | 13 0 |
| | | **Mymensingh.** | | | | | | | | | | | | | | | |
| | 40 | Nasirabad | 7 0 | 7 12 | 6 6 | 7 8 | 8 0 | 6 12 | 8 8 | 9 0 | 2 10 | 6 4 | 6 0 | 4 8 | 9 12*<br>9 8† | 9 8*<br>10 0 | 12 4 |
| | 41 | Netrakona | 6 8 | 7 0 | 6 3 | 7 12 | 8 0 | 6 8 | 5 0 | 5 0 | 4 0 | 4 0 | 4 0 | 4 0 | 9 1<br>8 0* | 9 1<br>8 0* | 11 4 |
| | | **Faridpur.** | | | | | | | | | | | | | | | |
| | 42 | Sadar .. | 7 12 | 8 0 | 5 8 | 8 12 | 8 12 | 6 0 | 5 8 | 5 8 | 7 0 | 4 8 | 6 8 | 3 4 | 9 12<br>10 0 | 8 8† | 13 0* |
| | 43 | Rajbari | 7 12 | 7 4 | 5 14 | 7 4 | 7 8 | 6 4 | 6 8 | 6 8 | 5 4 | 5 8 | 5 4 | 4 0 | 12 0*<br>11 0 | 12 0*<br>11 0 | 10 0 |
| | | **Bakarganj.** | | | | | | | | | | | | | | | |
| | 44 | Barisal | 7 8 | 7 8 | 5 3 | 8 0 | 8 4 | 6 0 | 8 0 | 9 8 | 1 6 | 5 4 | 5 4 | 4 0 | 8 0<br>8 4* | 8 4<br>8 4* | 9 11 |
| | 45 | Pirojpur . | 7 8 | 7 8 | 5 8 | 8 0 | 8 0 | 6 0 | 6 8 | 6 8 | 5 4 | 4 0 | 4 0 | (a) | 9 0† | 8 0† | 7 8 |
| | | **Tippera** | | | | | | | | | | | | | | | |
| Chittagong | 46 | Comilla | 7 4 | 7 0 | 5 5 | 8 0 | 7 10 | 5 12 | (a) | (a) | (a) | 4 8 | 4 8 | 3 9 | 8 0† | 8 0† | 10 9 |
| | 47 | Chandpur | 7 8 | 7 8 | 5 0 | 8 0 | 8 0 | 5 8 | 7 8 | 9 0 | 5 8 | 6 4 | 5 8 | 4 0 | 11 0<br>10 8* | 11 0<br>10 8* | 10 8 |
| | | **Noakhali.** | | | | | | | | | | | | | | | |
| | 48 | Kalitara Hât | 6 4 | 6 8 | 5 4 | 6 8 | 7 0 | 5 12 | 8 0 | 8 0 | 7 0 | 5 0 | 5 0 | 3 0 | 8 0† | 8 0† | 10 8 |
| | 49 | Fenl Hât . . | 6 8 | 7 0 | 5 15 | 7 0 | 7 8 | 6 9 | 4 0 | 4 0 | 3 4 | (c) | (c) | (c) | 9 7<br>8 0* | 9 7<br>8 0† | 10 1 |
| | | **Chittagong.** | | | | | | | | | | | | | | | |
| | 50 | Sadar.. ... | 6 8 | 6 8 | 5 14 | 7 8 | 7 8 | 6 0 | 5 4 | 5 4 | 5 0 | 5 4 | 5 1 | 4 0 | 11 0<br>8 0 | 11 0<br>8 0* | 13 0 |
| | 51 | Cox's Bazar . ... | 6 8 | 7 0 | 6 0 | (a) | (a) | (a) | 4 0 | 4 0 | 4 0 | 4 0 | 4 0 | 3 8 | 8 0<br>8 0* | 8 0<br>8 0* | 9 0 |
| | 52 | Chittagong Hill Tracts—Rangamati | (a) | (a) | 5 0 | 7 0 | 7 0 | 5 4 | 4 0 | 4 0 | 3 0 | 3 12 | 3 12 | 3 0 | 9 0<br>6 8* | 9 0<br>6 8 | 10 0 |

(a) Not available. (c) No sale. (a) Not reported. * Karkach.

*N.B.*—The prices of karkatch and Liverpool salt tally with each other in marts marked †.

J. C. ROY, for *Director of Agriculture, Bengal.*

DACCA, *the 12th July 1923.*

***Statement showing the gauge readings at Dacca Water-works station on the river Buriganga for the week ending 30th June 1923.***

| Date. | At 7 A.M. | At highest water. | | At lowest water. | | At 5 P.M. | Remarks. |
|---|---|---|---|---|---|---|---|
| | | Time. | Readings. | Time. | Readings. | | |
| 1923 | | | | | | | |
| 24th June | 61 5 | 6-40 | 61 55 | 12 40 | 61 0 | 61 4 | H T at 6 50<br>F T at 12 52 |
| 25th " | 61 7 | 7-30 | 61 85 | 13-25 | 61 2 | 61 7 | H T at 7-42<br>F T at 11 40 |
| 26th " | 62 0 | 8-15 | 62 2 | 14 10 | 61 6 | 61 9 | H T at 8 40,<br>F T at 14 35 |
| 27th " | 62 05 | 9-0 | 62 25 | 15 0 | 61 9 | 62 1 | H T at 9 18<br>F T at 15 15 |
| 28th " | 62 15 | 9-50 | 62 3 | 15-50 | 62 0 | 62 15 | H T at 10 5<br>F T at 16-5 |
| 29th " | 62 3 | 10-45 | 62·45 | 16-35 | 62 2 | 62 25 | H T at 10 55<br>F T at 16 50 |
| 30th " | 62 45 | 11-30 | 62 55 | 17-20 | 62 4 | 64 45 | H T at 11 45<br>F T at 17 35 |

*Notable high and low water-levels of previous years*

| | | | |
|---|---|---|---|
| | | High | |
| 27th August | 1906 | 70 5 | Taken at high tide |
| 5th September | 1909 | 67 86 | |
| 10th August | 1910 | 69 86 | |
| 1st " | 1911 | 68 46 | |
| 13th " | 1912 | 67 16 | |
| 31st " | 1915 | 69 7 | |
| 18th " | 1916 | 68 1 | |
| 12th " | 1917 | 67 1 | |
| 31st " | 1918 | 69 12 | |
| 2nd " | 1919 | 66 8 | |
| 8th September | 1920 | 66 9 | |
| 28th July | 1921 | 68 1 | |
| 10th August | 1922 | 68 00 | |
| | | Low | |
| 23rd February | 1907 | 51 06 | Taken at low tide |
| 13th " | 1908 | 51 06 | |
| 12th March | 1912 | 51 06 | |
| 6th " | 1914 | 50 60 | |
| 22nd February | 1915 | 50 0 | |
| 15th " | 1916 | 50 60 | |
| 3rd March | 1917 | 51 0 | |
| 21st February | 1918 | 51 40 | |
| 26th " | 1919 | 50 4 | |
| 18th " | 1920 | 50 9 | |
| 19th " | 1921 | 50 9 | |
| 8th March | 1922 | 51 05 | |

*N B*—Zero of the gauge at Dacca Water-works—18 51 with reference to P W D datum

B. L. SUBARWAL, *Executive Engineer,*
*Khulna Division.*

CALCUTTA, *the 7th July 1923.*

Printed at the Bengal Government Press, Alipore, and published by the Bengal Secretariat Book Depôt, Writers' Buildings, in the City of Calcutta, on the 18th July 1923

REGISTERED No. C[illegible]

No. 30 of 1923.

# The Calcutta Gazette

WEDNESDAY, JULY 25, 1923

CONTENTS

| | Page |
|---|---|
| PART I.—Orders and Notifications by the Governor of Bengal, the Government of Bengal, the High Court, Government Treasury, etc | 997—1037 |
| PART IA.—Orders and Notifications by the Government of India | 221—227 |
| PART IB.—Educational Notices | 581—653 |
| PART II.—Advertisements | 851—874 |
| PART III.—Acts of the Bengal Legislative Council | Nil |
| PART IV.—Bills introduced in the Bengal Legislative Council, Reports of Select Committees presented or to be presented to that Council, and Bills published before introduction in that Council— | |
| A Bill for the suppression of Immoral Traffic in the town and suburbs of Calcutta and in the Port of Calcutta, with the Report of the Select Committee | 311—320 |
| A Bill to supplement and amend the Bengal Tenancy Act, 1885, in order to provide means whereby a uniform annual money rent may be determined for utbandi lands and to make further provision in respect of such lands, with the Report of the Select Committee and Notes of Dissent | 321—331 |
| A Bill to provide for the management and future location of St Thomas' School and for the making over of certain land for the compound of St Thomas' Church in Calcutta to certain ecclesiastical authorities, with the Report of the Select Committee | 332—339 |
| A Bill further to amend the Calcutta Improvement Act, 1911, with the Report of the Select Committee and Note of Dissent | 340—346 |
| A Bill to provide for certain matters in connection with the Budget Estimate of the Corporation of Calcutta for the year 1924-25 the fixing of the rates at which the consolidated rates and the taxes for that year shall be levied and imposed and the arrangements to be made in connection with the raising of loans during that year, for the fixing of the percentage of the consolidated rate in respect of the added areas during the four succeeding years and for the amendment of section 29 of the Calcutta Municipal Act, 1923, in respect of the qualification of electors, with the Report of the Select Committee and Note of Dissent | 347—355 |
| PART V.—Acts of the Indian Legislature assented to by the Governor-General | Nil |
| PART VI.—Bills introduced in the Council of State and Legislative Assembly, Reports of Select Committees presented to the Council and Assembly, and Bills published under Rule 18 of the Indian Legislative Rules— | |
| A Bill further to amend the Indian Limitation Act, 1908, with Statement of Objects and Reasons | 103—104 |
| NO 74 OF 1923.—A Bill further to amend the Indian Income tax Act, 1922, for certain purposes, with Statement of Objects and Reasons | 105—106 |
| SUPPLEMENT No 30— | |
| **Construction of a new bridge between Calcutta and Howrah to replace the present floating bridge** | 1073—1094 |
| **Resolution on the budget estimate of income and expenditure of the Howrah Bridge for the year 1923-24** | 1095 |
| Monthly Weather and Crop Report—Weather and Crop Report—Circular and Eastern Canals—Daily gauge-readings—Vital Statistics—Daily rainfall—Weekly gauge-readings | 1096—1117 |

## PART I.

***Orders and Notifications by the Governor of Bengal, the Government of Bengal, the High Court, Government Treasury, etc.***

### ORDERS BY THE GOVERNOR OF BENGAL.

**Tour Programme of**

**HIS EXCELLENCY THE GOVERNOR OF BENGAL**

**during July and August, 1923.**

| Date and day. | Standard time. | Station. | Remarks. |
|---|---|---|---|
| **July.** | Hours. | | |
| 29th, Sunday ... | 15-30 | Leave Dacca ... | By the *Empress Mary*. |
| | 21-0 | Arrive Chandpur. | |
| | 21-30 | Leave Chandpur ... | By special train. |

| Date and day | Standard time. | Station. | Remarks. |
|---|---|---|---|
| **July.** | Hours. | | |
| 30th, Monday ... | 7-30 | Arrive Noakhali | |
| | 22-6 | Leave Noakhali ... | By special train. |
| 31st, Tuesday ... | 1-5 | Arrive Comilla ... | His Excellency will alight from the special train at 7-30 A.M. |
| **August.** | | | |
| 1st, Wednesday ... | 22-0 | Leave Comilla. | |
| 2nd, Thursday ... | 0-30 | Arrive Chandpur | |
| | 7-30 | Leave Chandpur ... | By the *Empress Mary.* |
| | 14-30 | Arrive Dacca. | |

NOTE.—(1) The party accompanying His Excellency will be—

Mr L Birley, C I E, I C.S, M L.C, Chief Secretary
Mr H R Wilkinson, I C S., Private Secretary
Major E H V Hodge, I.M.S, Surgeon
Captain G B Fyldes, M C, Aide-de-Camp

(2) Letters and telegrams for the party should be addressed to the Governor's Camp, Bengal, *without the addition of the name of any post town*

*N B* – The arrivals at Noakhali and Comilla will be public All other arrivals and departures will be private

J MACKENZIE, LIEUT-COL,
*Military Secretary to H. E the Governor of Bengal.*

GOVERNMENT HOUSE, DACCA, *the 24th July 1923.*

## NOTIFICATION.

*No. 1323A.R—The 17th July 1923.*—In exercise of the power conferred on him under clause (*b*) of sub-section (*2*) of section 72A of the Government of India Act, and in continuation of the orders contained in notification No. 1515 A D., dated the 21st June 1923, His Excellency the Governor hereby nominates Rai Sahib Mahendra Nath Gupta to be a member of the Bengal Legislative Council for a further period of two months, with effect from the 21st July 1923, for the purposes of the Bengal Tenancy (Utbandi Amendment) Bill, 1923.

L. BIRLEY,
*Chief Secretary to the Government of Bengal.*

## ORDERS BY THE GOVERNMENT OF BENGAL.

No. 7553A.

**LEAVE.**

GENERAL.—*No 7268A.—The 17th July 1923.*—Babu Nepal Chandra Sen, Deputy Magistrate and Deputy Collector, is allowed leave on average pay for ten days (the entire period being on account of privilege leave at his credit), under article 81 (*b*) (*ii*) of the Fundamental Rules and the note thereunder, in extension of the leave granted to him under the orders of the 23rd March 1923.

**Hooghly.**

*No. 7270A.—The 17th July 1923.*—In supersession of the orders of the 15th June 1923, Babu Bijay Krishna Sen, Sub-Deputy Collector, Serampore, Hooghly, is allowed leave on average pay for two months, under article 81 (*b*) (*ii*) of the Fundamental Rules, with effect from the date on which he may avail himself of it.

**Mymensingh.**

*No. 7272A.—The 17th July 1923.*—Babu Upendra Mohan Basu, Deputy Magistrate and Deputy Collector, Mymensingh, is allowed leave on average pay for one month and twelve days, under article 81 (*b*) (*ii*) of the Fundamental Rules, with effect from the 16th July 1923 or any subsequent date on which he may avail himself of it.

*No. 7274A.—The 17th July 1923.*—In supersession of the orders of the 14th February 1923 and 6th April 1923, Babu Manindra Bhusan Datta, Deputy Magistrate and Deputy Collector, Birbhum, is allowed leave on average pay for one month and one day, under the proviso to article 81 (*b*) (*ii*) of the Fundamental Rules, in extension of the leave granted to him under the orders of the 17th August 1922.

**Birbhum.**

*No. 7283A.—The 17th July 1923.*—Babu Upendra Mohan Sen Gupta, Deputy Magistrate and Deputy Collector, is allowed leave on half average pay up to the 14th September 1923, under article 81(*d*) of the Fundamental Rules, in extension of the leave granted to him under the orders of the 14th June 1923.

*No. 7400A.—The 18th July 1923.*—Maulvi Muhammad Ishaq, Sub-Deputy Collector, is allowed leave for one month, viz, leave on average pay for fifteen days under article 81 (*b*) (*ii*) of the Fundamental Rules and leave on half average pay for the remaining period under article 81 (*d*) of those rules, in extension of the leave granted to him under the orders of the 17th May 1923.

POLICE.—*No. 7479A.—The 19th July 1923.*—In supersession of the orders of the 30th May 1923, Major D I Macpherson, O B E., Commandant, Eastern Frontier Rifles (Bengal Battalion), Dacca, is allowed leave on average pay for four months (including privilege leave at credit for one day), under article 81 (*b*) (*i*) of the Fundamental Rules, with effect from the 5th July 1923

**Dacca.**

*No. 7488A.—The 20th July 1923.*—Babu Bhupendra Nath Banarji, Assistant Commissioner of Police, Calcutta, is allowed leave out of India on average pay for four months (the entire period being on account of privilege leave at credit), under proviso to article 81 (*b*) (*ii*) of the Fundamental Rules, with effect from the 6th August 1923, or any subsequent date on which he may avail himself of it

**Calcutta.**

L. BIRLEY,
*Chief Secretary to the Government of Bengal.*

## NOTIFICATION

*No 1276 A.R.—The 17th July 1923.*—The Governor in Council, in exercise of the power conferred by the proviso to sub-rule (*4*) of rule 5 of the Bengal Electoral Rules, having been pleased to pass an order removing the disqualification of Babu Bandya Nath Mukherji, the entry relating to the name of Babu Bandya Nath Mukherji in notification No 397 A D, dated the 9th May 1923, is hereby cancelled.

L. BIRLEY,
*Chief Secretary to the Government of Bengal*

## NOTIFICATION

*No. 1360A R.—The 18th July 1923.*—In modification of the orders contained in notification No 2A R, dated the 2nd July 1923, the Governor in Council is pleased, in exercise of the power conferred by clause (*5*) of Regulation V of the Bengal Electoral Regulations, to appoint for each constituency specified below the registering authority noted against each —

| | | |
|---|---|---|
| Bengal Mahajan Sabha | ... | Babu Hemendra Nath Chatarji, a member of the Executive Committee of the Sabha |
| Bengal Marwari Association | ... | Joint Secretary, Bengal Marwari Association. |

L BIRLEY,
*Chief Secretary to the Government of Bengal.*

## NOTIFICATION.

*No. 1363A.R.—The 18th July 1923.*—In modification of the orders contained in notification No. 14-A.R, dated the 2nd July 1923, the Governor in Council is pleased to direct that the Deputy Chairman of the Calcutta Corporation and the Joint Secretary to the Bengal Marwari Association shall be the registering authorities in respect of the Calcutta non-Muhammadan and Bengal Marwari Association constituencies of the Legislative Assembly respectively, in place of the Chairman of the Corporation and the Secretary to the Bengal Marwari Association

**Calcutta.**

L. BIRLEY,
*Chief Secretary to the Government of Bengal.*

## NOTIFICATION.

*No 7350A.—The 18th July 1923.*—The report of the Central Examination Committee having been received the result of the First Half-yearly Departmental Examination of Assistant Magistrates and others held on the 21st May 1923 and the four Subsequent days is published for general information :—

### SECOND OR HIGHER STANDARD.

(i) The officers named below who passed partially at previous examinations have now passed in the remaining subject or subjects mentioned opposite their names —

*Civil Officers.*

| | | |
|---|---|---|
| Akhil Chandra Das | ... | Law, Part III. |
| Upendra Nath Gangali | ... | Ditto. |
| Khurshed Ali | ... | Ditto. |
| Muhammad Ali Hussain Bhuiyan | . | Law, Part III and Accounts. |
| Sanat Kumar Mukharji | ... | Law, Parts I, II and Accounts. |
| Indu Bhusan Nag | ... | Hindustani. |
| Ashutosh Banarji | ... | Law, Part III. |
| Saadat Hussain Chaudhuri | .. | Ditto. |
| Musharraf Husain | . | Ditto. |
| Ramendu Sen | ... | Ditto |
| Upendra Nath Das Gupta | ... | Accounts. |
| Harendra Chandra Barori | . | Law, Part III |
| Kalyan Kumar Chatarji, I.C.S. | ... | Law, Part II and Accounts. |
| Nagendra Nath Das | ... | Accounts. |
| Phanindra Nath Chatarji | ... | Ditto. |
| G. G Hooper, I.C.S. | ... | Hindustani. |
| Jaladhar Ghosh | . | Accounts. |
| Nut Behari Chatarji | ... | Hindustani |
| Paresh Nath Chatarji | ... | Law, Part III and Accounts. |
| Shib Charan Mitra | ... | Law, Part III |
| Saleh Abdur Rahim | ... | Law, Part III and Accounts |
| Bhudeb Mukharji | ... | Law, Part III |
| H G. S. Bivar, I C S | ... | Hindustani |
| Mir Hussain | ... | Law, Part III. |
| T I. M Nurunnabi Chaudhuri, I.C S | | Ditto. |
| Khurshed Alam Chaudhuri | ... | Law, Parts II and III, Accounts and Hindustani. |
| S M Siddique Ahmad | ... | Accounts |
| Fazlul Karim, No I | ... | Law, Part III |
| Mangal Kumar Acharji | ... | Accounts. |
| Muhammad Abdus Sattar | ... | Law, Part III and Accounts |
| H. S E. Stevens, I C S. | ... | Hindustani |
| Digendra Prasad Nag | ... | Law, Part I |
| Manzur Ahmad Chaudhuri | ... | Law, Part III |
| Muhammad Taheruddin | .. | Law, Parts I and III and Accounts. |
| Praphulla Kumar Mandal | .. | Law, Part III, Accounts and Hindustani. |
| Chaudhuri Abid Ali | ... | Law, Part III. |
| Sati Kumar Maitra | ... | Law, Part II. |
| Lalit Kumar Dutt | ... | Law, Part III and Accounts. |
| Harendra Kumar Ghosh | ... | Law, Parts I and III. |
| M. O. Carter, I.C.S. | ... | Accounts, Bengali and Hindustani. |
| Shottyendro Kumar Gosh, I.C.S | ... | Law, Part III. |
| Rakhal Chandra Sen, I.C.S. | ... | Hindustani. |
| Jitendriya Mukharji | ... | Accounts. |
| Dhirendra Nath Banarji | ... | Law, Part III. |
| Keshab Chandra Banarji | ... | Law, Part II. |
| Harendra Nath Mukharji | ... | Law, Part III. |
| Samsul Abedin | ... | Law, Parts II and III, and Accounts. |
| Kumar Adhikram Majumdar | ... | Law, Parts I and III, and Accounts. |
| Satya Charan Banarji | ... | Law, Parts II and III. |
| Abdul Karim, No I | ... | Law, Part III. |
| Saiyid Mojawar Ali Mirza | ... | Law, Part III. |

(ii) The undermentioned Police officers have passed in the subject or subjects mentioned opposite their names :—

| | | |
|---|---|---|
| P N. Jones | ... | Police Law, without books. |
| B. H. Routledge | ... | Ditto. |
| E. H. Le Brocq | ... | Ditto. |
| Sukumar Gupta | ... | Police Law, without books, Accounts and Hindustani. |

| | | |
|---|---|---|
| E. S. C. Sen | ... | Accounts and Hindustani. |
| T. J. Clark | ... | Ditto ditto. |
| E. H. O'Doneven | ... | Accounts |
| D. A. Brayden. | ... | Ditto. |
| C. Weale ... ... | ... | Ditto. |
| G. E. T. H. Evans ... | ... | Hindustani |

(iii) The officers named below have passed partially and are still liable to examination in subject or subjects mentioned opposite their names —

*Civil Officers*

| Names. | | Now passed in | Still liable to examination in |
|---|---|---|---|
| K A. L Hill, I.C.S | ... | Law, Parts I, II and Accounts | Law, Part III and Bengali and Hindustani |
| T. B. Jameson, I.C.S. | ... | Law, Part II .. | Law, Part III, Accounts, Bengali and Hindustani |
| A G McCall, I.C.S | ... | Law, Parts II and III and Accounts | Bengali and Hindustani |
| P J Griffiths, I.C.S | .. | Law, Parts I and II and Accounts | Law, Part III, Bengali and Hindustani |
| Anwaruddin Ahmad | ... | Hindustani ... ... | Law and Accounts |
| Benoy Lal Ghosh | ... | Law, Parts I and III . | Accounts and Hindustani |
| Khundkar Muhammad Hussain | ... | Law, Part I and Accounts ... | Law, Parts II and III |
| Anantakumar Malakar | ... | Law, Part III ... | Law, Part II. |
| Subodh Chandra Das Gupta | | Law, Part II . | Law, Part III and Accounts |
| Jasoda Kinkar Ghosh | ... | Law, Part III ... | Accounts |
| Rajendra Lal Mukharji | .. | Law, Part II and Accounts | Law, Part III |
| Binay Ranjan Sen, I.C.S | | Law, Part I and Accounts .. | Law, Parts II and III and Hindustani. |
| Ashutosh Das Gupta | | Accounts . | Law, Part III and Hindustani |
| Abu Ahmad Faizul, Molla | ... | Law, Part I and Accounts .. | Law, Parts II and III |
| Satyendra Nath Banarji | .. | Law, Part I ... | Law Parts II and III, Accounts and Hindustani |
| Prabhat Chandra Chatarji | . | Accounts | Law, Part III. |
| Kazi Fazlul Karim | .. | Ditto . | Ditto |
| Jyotibaran Chakrabarti | . | Hindustani . | Ditto |
| Khundkar Abdul Hannan | .. | Accounts . | Ditto |
| Santosh Kumar Sarkar | ... | Law, Parts I, II and III and Accounts | Hindustani |
| N M Ayer, I.C.S | .. | Law, Part I and Accounts . | Law, Parts II and III, Bengali and Hindustani |
| B E J Burge, I.C.S | .. | Law, Parts III and Accounts | Hindustani |
| A E Porter, I.C.S | | Law, Parts I and II ... | Law, Part III, Accounts, Bengali and Hindustani |
| Khundkar Fazle Quadir | .. | Accounts ... | Law, Part II |
| Satya Priya Bhattacharji | ... | Law, Part I .. | Law, Part III and Accounts |
| Sakhawat Hussain Molla | ... | Accounts ... | Law, Parts II and III and Hindustani |
| Bidyut Kumar Raha | .. | Ditto ... | Law, Parts I and III |
| Amar Nath Mukharji | . | Law, Part III . | Law, Parts I and II |
| Satya Prasanna Banarji | .. | Law, Parts I and III . | Accounts |
| Kula Bhushan Datta | ... | Accounts ... | Law, Parts II and III |
| Ahmad Hussain | .. | Ditto .. | Law, Part III |
| H D Benjamin, I.C.S | | Law, Part I ... | Law, Parts II and III, Accounts, Bengali and Hindustani |
| Sukumar Sen, I.C.S. | .. | Law, Parts I and II, Accounts and Hindustani | Law, Part III |
| Jyotish Chandra Aich | .. | Law, Part III | Hindustani. |
| Nur Muhammad Chaudhuri | . | Law, Part II and Accounts | Law, Part III |
| Mahzuddin Ahmad | ... | Law, Part II and Hindustani | Ditto |
| Muhammad Taher | ... | Law, Part III ... | Law, Part II and Accounts. |
| Abdul Karim, No II | ... | Hindustani ... | Law and Accounts |
| Abu Hamid Nurul Huda | ... | Accounts ... | Law, Part III. |
| Jyotirindra Nath Das | ... | Law, Parts I and III ... | Hindustani |
| Atawar Rahman | ... | Accounts ... | Law, Part III |
| A. S. Larkin, I.C.S. | ... | Law, Part III and Accounts | Law, Parts I, II and Bengali |
| Dhirendra Nath Khan | ... | Law, Part I ... | Law, Parts II and III and Accounts and Hindustani |
| Rajendra Chandra Sen | ... | Law, Part I and Accounts ... | Law, Parts II and III. |
| Sudhir Chandra Bhaduri | ... | Accounts ... | Law, Parts I and III |
| Jogendra Nath Maitra | ... | Accounts and Hindustani ... | Law, Part III. |
| H. G Waight, I.C.S | ... | Ditto ... | Bengali |
| Sudhir Kumar Majumdar | .. | Accounts ... | Law, Parts II and III and Hindustani |
| Tauhiduddin Ahmad | ... | Law, Part I and Accounts .. | Law, Part III and Hindustani. |
| Charu Chandra Bhattacharji | ... | Accounts ... | Law, Part III |

| Names | Now passed in | Still liable to examination in |
|---|---|---|
| Sarashi Mohan Das Gupta ... | Accounts ... | Law. |
| Sharat Chandra Gupta ... | Hindustani ... | Law and Accounts |
| Motaharul Haq ... | Accounts ... | Law, Part III |
| Bipul Chandra Chatarji .. | Hindustani ... | Law and Accounts |
| Siddique Gholam Rahman Khan .. | Law, Part II and Accounts . | Law, Part III |
| Abul Husain Muhammad Wazir Ali .. | Ditto ... | Ditto |
| Abul Khair Muhammad Saiyid .. | Hindustani ... | Law and Accounts |
| Abdur Rahim . | Law, Part I . | Law, Parts II and III |

(*iv*) The undermentioned Excise officers have passed in the subject mentioned opposite their names :—

Ashoke Krishna Mukharji ... Excise law with book.
Muhammad Gholam Kader ... Accounts.
Motahar Husain Khan ... Ditto.

(*v*) The Educational officer named below has passed in Bengali —

R Woltenden

(*vi*) The Forest officer named below has passed in Bengali :—

S J Curtis.

FIRST OR LOWER STANDARD.

(*i*) The following officers have passed completely :—

*Civil officers*

T B. Jameson, I C S
P J. Griffiths, I C.S
Satyendra Nath Banarji
A. E Porter, I.C S
Dhirendra Nath Khan
Rajendra Chandra Sen
Sambhu Chand Ray.

(*ii*) The officers named below who passed partially at previous examination have passed in the remaining subject mentioned opposite their names —

*Civil officers*

Sanat Kumar Mukharji ... Law, Part II
Madhusudan Mandal ... Ditto
Dhirendra Chandra Nag ... Law, Part I
Kamakshya Prasad Sen .. Ditto.
Sakhawat Husain Molla ... Law, Part II
Sudhir Kumar-Majumdar ... Ditto.
Dwijendra Nath Chakrabatti ... Law, Part I
Abul Husain Muhammad Wazir Ali Law, Part II.
Abdul Azim ... Ditto.

(*iii*) The officers named below have passed partially and are still liable to examination in the remaining subject mentioned opposite their names —

| Names. | Now passed in | Still liable to examination in |
|---|---|---|
| Khundkar Muhammad Husain ... | Law, Part I .. | Law, Part II. |
| Bipul Chandra Chatarji ... | Ditto ... | Ditto |
| Muhammad Israil Khan ... | Ditto ... | Ditto |

(*iv*) The following police officers have passed in the subject mentioned opposite their names :—

P. N. Jones ... Police law without books.
J. V. Janvrin ... Ditto.
B. H. Routledge ... Ditto.
E. B. Ellison ... Ditto.
E. H. Le Brocq ... Ditto.
Sukumar Gupta ... Ditto.
G. E. T. H. Evans ... Bengali.
D. A. Brayden ... Do.

(v) The undermentioned forest officers have passed in the subject or subjects mentioned opposite their names :—

| | | |
|---|---|---|
| W E. Hodge | ... | Hindustani. |
| J. C. M. Gardner | ... | Forest Law and Land Revenue |
| G. W. Houlding | ... | Forest Law, Procedure and Accounts and Hindustani |
| F. J. A. Hart | ... | Procedure and Accounts and Hindustani |

(vi) The officers of the Irrigation Department named below have passed in the subject or subjects mentioned against their names --

| | | |
|---|---|---|
| Debendra Nath Sen Gupta | ... | Canal Law, Part A |
| Kedar Nath Mazumdar | ... | Canal Law, Part C |
| Prithiraj Mukharji | ... | Canal Law, Part B |
| Angshujit Mukharji | ... | Canal Law, Parts B and C. |
| Probodh Chandra Bose | .. | Ditto. |
| Surendra Lal Maitra | ... | Ditto |

(vii) The following Public Works Department officers have passed in Bengali —

J. Chambers
H. Vaughan Smith.

(viii) The undermentioned Agricultural officer has passed in Bengali —

K. McLean.

(ix) The Medical officer named below has passed the colloquial test in Bengali —

Major W L. Harnett, I M.S

(x) The undermentioned Junior Inspector of Mines has passed in Bengali by the colloquial and reading test —

J H Lang

L. BIRLEY,
*Chief Secretary to the Government of Bengal.*

## POLITICAL DEPARTMENT.

### NOTIFICATION

*No 6738P —The 23rd July 1923* —In exercise of the power conferred by section 99A of the Code of Criminal Procedure, 1898, as amended by the third schedule of the Press Law Repeal and Amendment Act, 1922 (Act XIV of 1922), the Governor in Council hereby declares to be forfeited to His Majesty all copies, wherever found, of issue No 10, Volume II, of a newspaper in English called the "Vanguard," dated the 1st July 1923, commencing with the words "Tranquillity—Repression in India, which seemed to have reached flood-tide" and ending with the words "and are discovered to have read communist literature?" and all other documents containing extracts therefrom on the ground that the said newspaper contains words which bring or attempt to bring into hatred and contempt the Government established by law in British India, the publication of which is punishable under section 124A, Indian Penal Code.

L. BIRLEY,
*Chief Secretary to the Government of Bengal.*

## POLICE DEPARTMENT.

### NOTIFICATION

Rajshahi.

*No. 2219Pl.—The 19th July 1923.*—In exercise of the power conferred by sub-section (2) of section 6 of the Prevention of Cruelty to Animals Act, 1890 (XI of 1890), the Governor in Council is pleased to declare the Rajshahi Veterinary Hospital, which is situated within the limits of the Rajshahi Municipality, to be an infirmary for the treatment and care of animals in respect of which offences against sub-section (1) of that section have been committed.

L. BIRLEY,
*Chief Secretary to the Government of Bengal.*

## JUDICIAL DEPARTMENT.

No. 7554A.

### POWERS.

*No. 7290A.—The 17th July 1923.*—In exercise of the powers conferred by the proviso to section 357 of the Code of Criminal Procedure, 1898 (Act V of 1898), the Governor in Council is pleased to direct Maulvi Nuruddin Ahmad, Sub-Deputy Magistrate, Chittagong Sadar, to record evidence in the English language.

**Chittagong.**

*No. 7402A.—The 18th July 1923.*—Babu Naba Gopal Ray, Sub-Deputy Magistrate, Netrakona, Mymensingh, is vested with the powers of a Magistrate of the second class.

**Mymensingh.**

*No. 7495A.—The 20th July 1923.*—Babu Kumud Kumar Banarji, Deputy Magistrate, on probation, Midnapore, is vested with the powers of a Magistrate of the second class.

**Midnapore.**

L. BIRLEY,
*Chief Secretary to the Government of Bengal.*

### APPOINTMENTS AND TRANSFERS.

*No. 4160J.—The 17th July 1923.*—Lala Jogesh Chandra, officiating Munsif of Mymensingh, is appointed temporarily to act as a Munsif, in the same district, to be ordinarily stationed at Iswarganj.

**Mymensingh.**

*No. 4167J.—The 17th July 1923.*—In exercise of the powers conferred by sections 14 and 15 of the Code of Criminal Procedure, 1898 (Act V of 1898), the Governor in Council is pleased—

(*a*) to confer upon Maulvi Muhammad Khairuddin Choudhury the powers of a Magistrate of the third class, in the district of Rangpur, for a period of three years from the date of this notification, and

**Rangpur.**

(*b*) to direct him to sit as a member of the Kurigram Independent Bench in the said district.

*No. 4169J.—The 17th July 1923.*—In exercise of the powers conferred by sections 14 and 15 and the proviso to section 357 of the Code of Criminal Procedure, 1898 (Act V of 1898), the Governor in Council is pleased—

(*a*) to confer upon Maulvi Abdus Sobhan the powers of a Magistrate of the third class, in the district of the 24-Parganas, for a period of three years from the date of this notification, and

**24-Parganas.**

(*b*) to direct him to sit as a member of the Titagarh Bench in the said district, and

(*c*) to direct him to take down evidence in the English language.

*No. 4175J.—The 18th July 1923.*—Babu Bhujagendra Mustafi, Munsif, is appointed, on being relieved from his deputation in the High Court, Calcutta, to be Registrar and Chief Ministerial Officer of the Court of Small Causes, Calcutta, *vice* Babu Narendra Nath Lahiri, reverted to the general line. He is also vested under section 14, Act XV of 1882 (the Presidency Small Cause Court Act), with the powers of a Judge for the trial of suits in which the amount of value of the subject matter does not exceed Rs. 20 (twenty).

**Calcutta.**

*No. 4181J.—The 18th July 1923.*—In exercise of the power conferred by section 14 and the proviso to section 357 of the Code of Criminal Procedure, 1898 (Act V of 1898), the Governor in Council is pleased—

(*a*) to confer upon Babu Salil Kumar Acharjee Chaudhuri the powers of a Magistrate of the third class, in the district of Mymensingh, for a period of three years from the date of this notification, in respect to such cases under the Acts noted in the margin occurring within the municipality of Muktagacha, in the Sadar subdivision of the said district, as may be made over to him sitting at Muktagacha, and

**Mymensingh.**

The Calcutta Hackney Carriage Act, 1891 (Bengal Act II of 1891).
The Bengal Cruelty to Animals Act, 1869 (Bengal Act I of 1869).
The Police Act V of 1861, Bengal Public Gambling Act, 1867 (Bengal Act II of 1867).
The Bengal Municipal Act, 1884 (Bengal Act III of 1884).

(*b*) to direct him to take down evidence in the English language.

*No. 4195J.—The 19th July 1923.*—Babu Kishori Lal Chatarji, M.A., B.L., is appointed to act as a Munsif in the district of Bakarganj, to be ordinarily stationed at Barisal until further orders.

**Bakarganj.**

**LEAVE.**

*No. 4205J.—The 3rd July 1923.*—In modification of the leave granted to him under the orders of the 7th May 1923, Babu Banku Bihari Chatarji, munsif of Lalbagh, in the district of Murshidabad, is allowed leave on half average pay from the 9th to the 22nd March 1923, under article 81 (*d*) of the Fundamental Rules, and on average pay, on medical certificate, from the 23rd March to the 8th May 1923 under the proviso to article 81 (*b*) (*ii*) of those rules.

**Murshidabad.**

*No 4206J.—The 7th July 1923.*—Babu Tarak Nath Basu, munsif of Jangipur, in the district of Murshidabad, is allowed leave on half average pay for one day, under article 81 (*d*) of the Fundamental Rules, in extension of the leave granted to him under the orders of the 4th April 1923

**Murshidabad.**

*No. 4207J.—The 10th July 1923.*—Babu Ram Dulal Deb, munsif of Bankura, is allowed leave on half average pay for one month, under article 81 (*d*) of the Fundamental Rules, with effect from the 25th June 1923.

**Bankura.**

H. P. DUVAL.

*Secretary to the Government of Bengal*

NOTIFICATION

*No 4197J.—The 19th July 1923.*—In exercise of the power conferred by section 73 of the Bengal Village Self-Government Act, 1919 (Bengal Act V of 1919), the Governor in Council is pleased to appoint the following members of the union boards mentioned below, during their term of office as such members, to be union courts within the jurisdiction of the union boards of which they are, respectively, members for the purposes of that section —

**Burdwan.**

**Names of the members of union boards to constitute union courts in the Katwa and Kalna subdivisions of the Burdwan district.**

**Katwa subdivision.**

| Name of police-station | Name of union board | Names of members |
|---|---|---|
| Katwa .. | Srikhanda .. | 1 Babu Rajendra Kumar Ray<br>2 „ Panchanan Kaviraj<br>3. Syed Muhammad Sultan<br>4 Khondkar Azizul Bari |
| Do . | Singi ... | 1 Babu Rajendra Nath Banerji<br>2. „ Baman Das Bhattacharji<br>3. „ Radhika Nath Chaudhuri<br>4. Shaikh Nawazish Molla |
| Do . | Agradwip ... | 1. Babu Herambalal Chatarji<br>2 „ Gokul Chandra Banerji.<br>3. Dr Kali Nath Ray.<br>4 Babu Ashutosh Bose |
| Katugram ... | Gangatikari ... | 1. Babu Siva Das Bhattacharji<br>2. „ Satya Kinkar Ray<br>3 „ Saradindu Mohan Ghosh<br>4. „ Nibaran Chandra Majumdar |
| Mangalkote ... | Simula .. | 1. Babu Chandra Shekhar Ray Chaudhuri.<br>2 Shaikh Abdul Majid<br>3. Babu Tarapada Ray.<br>4. „ Renu Pada Santra |

**Kalna subdivision.**

| Name of union board | Names of members |
|---|---|
| Krishnadebpur .. | 1 Babu Kali Pada Mukharji.<br>2 „ Pulin Behari Mukharji.<br>3 „ Hemanta Kumar Modak<br>4 „ Upendra Nath Set |
| Pindira ... | 1. Babu Satyendra Nath Mukharji<br>2. „ Tulshi Charan Mukharji.<br>3. Maulvi Ekramal Haque<br>4. Muhammad Daimulla. |
| Dogachhia ... | 1. Babu Anukul Chandra Rai Chaudhuri<br>2 „ Narendra Nath Bose.<br>3. „ Panchanan Roy.<br>4. Shaikh Umerali. |
| Monteswar ... | 1. Babu Panchanan Roy.<br>2. „ Gour Mohan Chatarji, B.L.<br>3. „ Nrishingha Prosad Chaudhuri.<br>4. Shaikh Abdul Mondal. |

H. P. DUVAL,

*Secretary to the Government of Bengal.*

## LOCAL SELF-GOVERNMENT DEPARTMENT.

### NOTIFICATIONS.

**Minister in charge: The Hon'ble Sir S. N. Banarji, Kt.**

*No. 2229M.—The 14th July 1923.*—The following draft of by-laws, which the Government of Bengal (Ministry of Local Self-Government) propose to make for the Bhadreswar Municipality, in the district of Hooghly, in exercise of the power conferred by sub-section (*1*) of section 71 of the Calcutta Hackney Carriage Act, 1919 (Bengal Act I of 1919), is published for the information of persons likely to be affected thereby

**Hooghly.**

2. The draft will be taken into consideration on the 4th September 1923 and any objection or suggestion received by the undersigned before that date, through the District Magistrate, will be duly considered.—

**Draft by-laws under section 71 (*1*) of the Calcutta Hackney Carriage Act, 1919 (Bengal Act I of 1919), for the Bhadreswar Municipality in the district of Hooghly.**

**Appointment and duties of the Registering Officer.**

1. Every hackney-carriage in the Bhadreswar Municipality shall be annually registered by a Registering Officer who shall be appointed for the purpose by the Municipal Commissioners and who shall keep a register in which he shall enter the class and number assigned to every hackney-carriage.

**Qualification of Drivers.**

2 Every person applying for a driver's license shall be required to satisfy the Registering Officer —

(*a*) that he knows how to drive and control horses and is in all respects a fit person for such employment,

(*b*) that he has a thorough knowledge of the rates and fares prepared by the Commissioners, and

(*c*) that he knows the rules of the road and the signals used by drivers, police and municipal servants

3. Licenses for hackney-carriage drivers will be in different forms. There shall be attached to each license in such a manner as the Commissioners may prescribe, a list of fares according to distance and time, to be prepared under the authority of the Commissioners and the thumb mark of the driver The list of fares shall be supplied free of cost to every driver

4. Every driver of a hackney-carriage shall carry with him and produce when called upon to do so by any police officer or by municipal authority or by any municipal servant, his license with the list of fares.

5 No hackney-carriage driver shall be allowed to drive any licensed hackney-carriage or carriages other than those specified on his license without the permission of the Registering Officer.

**Description of horses and carriages.**

6. No horse shall be used to draw a hackney-carriage unless it has been passed by the Registering Officer and no horse shall be passed unless it is—

(*a*) not less than 13 hands high if intended to be used in a pair in a first class hackney-carriage,

(*b*) not less than 14 2 hands high if intended to be used singly in a first class hackney-carriage,

(*c*) not less than 12 hands high if intended to be used in a pair in a 2nd class hackney-carriage,

(*d*) not less than 14 hands high if intended to be used singly in a 2nd class hackney-carriage,

(*e*) not less than 11·2 hands high if intended to be used in a pair in a third class hackney-carriage;

(*f*) not less than 13·2 hands high if intended to be used singly in a 3rd class hackney-carriage;

(*g*) thoroughly broken to harness;

(*h*) free from infectious or contagious disease.

7. The harness shall be of decent appearance, strong and in good repair; rope traces may be used.

8. First class hackney-carriages shall conform to the following dimensions and be of a pattern fixed by the Commissioners :—

| | Ft. | in |
|---|---|---|
| Width of seats ... ... ... ... | 3 | 4 |
| Breadth of front seat ... ... ... ... | 1 | 4 |
| Ditto rear seat ... ... ... ... | 1 | 6 |
| Height of seat from floor without cushions ... .. | 1 | 2 |
| Ditto roof from the seats without cushions ... ... | 3 | 10 |
| Ditto back rest of hind seat ... .. . | 2 | 4 |
| Thickness of cushion ... ... ... .. | 0 | 3 |
| Height of back rest of front seat ... ... ... | 1 | 4 |
| Width between seats ... ... ... ... | 1 | 10 |
| Height of bottom of well from the ground ... ... | 1 | 8 |
| Ditto steps from ground ... ... ... | 0 | 10 |
| Diameter of front wheels ... ... ... ... | 2 | 8 |
| Ditto back wheels .. ... ... ... | 3 | 6 |

Provided that hackney-carriages held by the Commissioners to have been in existence before the issue of these by-laws may, if the Commissioners think fit, be exempted from conforming to these dimensions

The wheels shall be rubber-tyred, strong and sound so as to run true and without rattling and shaking, and shall be protected by properly fitted splash boards The springs and axles shall be in perfect order and all iron work must be strongly put together.

The lining and cushions shall be clean and in good condition and the inside of the carriage perfectly clean The hood and apron shall be made of strong leather and shall be so fitted as to make the carriage water-tight

The body, wheels and shafts of the carriage shall be painted dark green with plain yellow or gold lining, the hood and apron shall be painted black The doors shall close well and shall not rattle All iron work shall be painted black.

Each carriage must have a thoroughly good pair of lamps and each lamp shall have a red glass window in the back and shall be so placed that the light from the window shall be visible from a point ten yards in rear of the centre of the vehicle

9 Second class hackney-carriages (phaeton type) -- The same measurement as those prescribed for first class hackney-carriages, but of lighter make

Provided that hackney-carriages held by the Commissioners to have been in existence before the issue of those by-laws may if the Commissioners think fit, be exempted from conforming to those dimensions

The wheels shall be rubber-tyred or iron-tyred, strong and sound so as to run true and without rattling or shaking, and shall be protected by properly fitted splash boards. The springs and axles shall be in perfect order and all iron-work must be strongly put together

The linings and cushions shall be clean and in good condition and the inside of the carriage perfectly clean. The hood and apron shall be made of strong leather and shall be so fitted as to make the carriage water-tight.

The body, wheels and shafts of the carriage shall be painted dark blue with plain red lining The hood and apron shall be painted black The doors shall close well and shall not rattle. All iron work shall be painted black.

Each carriage must have a good pair of lamps Each lamp shall have a red glass window in the back and shall be so placed that the light from the window is visible from a point ten yards in rear of the centre of the vehicle

10 Second class hackney-carriages (not being being of phaeton type) shall conform to the following dimensions and be of a pattern fixed by the Commissioners —

| | Ft | in. |
|---|---|---|
| Width of seats . . ... ... ... ... | 3 | 4 |
| Breadth of seats ... .. ... ... | 1 | 6 |
| Height of seats from floor without cushions .. ... | 1 | 2 |
| Thickness of cushions ... ... ... ... | 0 | 3 |
| Height of roof from seats without cushions ... ... | 3 | 10 |
| Width between seats ... ... ... ... | 1 | 10 |
| Height of bottom of well from ground ... ... | 1 | 8 |
| Ditto steps from ground ... ... ... | 0 | 10 |
| Diameter of front wheels ... ... ... | 2 | 6 |
| Ditto back wheels ... ... ... | 3 | 6 |

Provided that hackney-carriages registered before the issue of these by-laws are exempted from conforming to these demensions

The wheels shall be rubber-tyred or iron-tyred, strong and sound so as to run true and without rattling or shaking. The springs and axles shall be in perfect order The lining and cushions shall be clean and in good condition and the inside of the carriage perfectly clean.

The doors shall close well. The windows, venetians and blinds shall not rattle, but shall work easily and shall have proper catches to raise and lower them. The roof shall be water-tight. The body, wheels and shafts of the carriage shall be painted dark blue with thin red lining. All iron work shall be painted black.

Each carriage must have a good pair of lamps. Each lamp shall have a red glass window in the back and shall be so placed that the light from the window is visible from a point ten yards in rear of the centre of the vehicle

11 Third class hackney-carriages shall conform to the following dimensions and be of a pattern fixed by the Commissioners —

| | Ft. | in. |
|---|---|---|
| Width of seats ... ... ... ... | 3 | 0 |
| Breadth of seats ... ... .. ... | 1 | 6 |
| Height of seats from floor without cushions ... ... | 1 | 2 |
| Thickness of cushions ... ... ... .. | 0 | 3 |
| Height of roof from seats without cushions .. ... | 3 | 10 |
| Width between seats ... ... .. ... | 1 | 10 |
| Height of bottom of well from ground ... ... | 1 | 8 |
| Ditto steps from ground ... .. ... | 0 | 10 |
| Diameter of front wheels ... ... ... ... | 2 | 6 |
| Ditto back wheels ... ... ... ... | 3 | 6 |

Provided that hackney-carriages registered before the issue of these by-laws are exempted from conforming to these dimensions.

The wheels shall be iron-tyred, strong and sound so as to run true and without rattling or shaking The springs and axles shall be in prefect order The lining and cushions shall be clean and in good condition and the inside of the carriage perfectly clean

The doors shall close well. The windows, venetians and blinds shall not rattle, but shall work easily and shall have proper catches to raise and lower down The roof shall be water-tight. The body, wheels and shafts of the carriage shall be painted chocolate with plain yellow lining All the iron work shall be painted black

Each carriage must have a good pair of lamps Each lamp shall have a red glass window in the back and shall be so placed that the light from the window is visible from a point ten yards in rear of the centre of the vehicle.

### Classes of Hackney-carriages.

12. Hackney-carriages shall be of three classes and of pattern fixed by the Commissioners and of the dimensions and colours prescribed by by-laws Nos 8 to 11.

13 Every licensed hackney-carriage shall be distinctly marked on its panels and on the inside with the registered number and the number of the class to which it belongs, the figures to be not less than eight inches in length, the colour of which shall be changed every year.

14 The lamps of every hackney-carriage shall have the registered number painted on them, the figures to be not less than one inch in length, the colour of which shall be changed every year

### Fees.

15 A fee shall be paid to the Commissioners in accordance with the following scale for the issue, transfer or renewal of licenses, etc .—

| | 1st class hackney carriage | | 2nd class hackney carriage. | | 3rd class hackney-carriage | | House | |
|---|---|---|---|---|---|---|---|---|
| | Rs | A | Rs | A | Rs | A | Rs. | A |
| Owner's license .. .. ... | 4 | 0 | 3 | 0 | 2 | 0 | 2 | 0 |
| Driver's license ... .. | 2 | 0 | 2 | 0 | 2 | 0 | .. | |
| License plate .. . | 0 | 8 | 0 | 8 | 0 | 8 | 0 | 8 |
| Transfer of owner's license .. | 3 | 0 | 2 | 8 | 2 | 0 | ... | |
| Duplicate owner's license .. .. . | 2 | 0 | 1 | 8 | 1 | 0 | 1 | 0 |
| Duplicate driver's license ... ... .. | 1 | 0 | 1 | 0 | 1 | 0 | ... | |
| Duplicate driver's ticket ... ... ... | 0 | 8 | 0 | 8 | 0 | 8 | ... | |
| List of fares ... ... ... | 0 | 4 | 0 | 4 | 0 | 4 | ... | |
| Fare plate ... ... ... | 1 | 8 | 1 | 8 | 1 | 8 | ... | |
| Duplicate fare plate ... ... ... | 1 | 8 | 1 | 8 | 1 | 8 | ... | |
| Certificate copy of particulars of register and license ... | 0 | 8 | 0 | 8 | 0 | 8 | 0 | 8 |
| Alteration in register ... ... ... | 0 | 8 | 0 | 8 | 0 | 8 | 0 | 8 |

### Rates and Fares.

16. Fares shall be paid according to distance or time at the option of the hirer to be expressed at the commencement of the hiring ; if not otherwise expressed, the fare to be paid according to time.

**Rates and fares to be paid for hackney-carriages.**

| Description of carriage. | Fare by distances. | | Fare by time | |
|---|---|---|---|---|
| | For any distance within and not exceeding one mile. | For any distance exceeding one mile. | | |
| | As. | | | Rs A |
| 1st class ... | 12 | Annas six for every additional mile or any part thereof | Minimum fare not exceeding fifteen minutes | 0 8 |
| | | | Half an hour ... .. | 1 0 |
| | | | One hour ... | 1 8 |
| | | | Subsequent hours .. . | 0 12 |
| 2nd class ... | 8 | Annas four for every additional mile or any portion thereof | Half an hour ... ... | 0 8 |
| | | | One hour .. .. | 0 12 |
| | | | Subsequent hours . . | 0 8 |
| 3rd class .. | 6 | Annas three for every additional mile or any portion thereof. | Half an hour . | 0 6 |
| | | | One hour ... | 0 8 |
| | | | Subsequent hours .. | 0 6 |

**Passengers and Luggage.**

17. No hackney-carriage shall carry more than four adult persons altogether, in addition to the driver and attendant.

*Explanation.*—For the purpose of this by-law, two children under 12 years of age shall be reckoned as one adult.

18. The driver of every hackney-carriage shall carry in or upon such carriage a quantity of luggage not exceeding two maunds together with one additional maund, for every person below four carried in the carriage, without any charge over and above the fare.

A charge not exceeding two annas may be levied for every ten seers or part thereof in excess of the above free allowance.

**Inspection of Hackney-carriages.**

19. It shall be lawful for any police officer of and above the rank of Sub-Inspector and Health Officer or Sanitary Inspector and the Overseer of the Municipality, at any time between sunrise and sunset to enter any premises on which any licensed hackney-carriage or the horses or other animals, harness or other things used therewith are kept in order to carry out any provision of this Act, or these by-laws, and the owner, occupier or his agent shall afford every facility for such officer's inspection.

**Protection of weak and lame horses.**

20. It shall be lawful for the Registering Officer at any time to cause any animal used in hackney-carriage to be produced before him for the propose of inspection, and it shall be compulsory upon the owner to produce any such animal within twenty-four hours on the receipt of such notice.

21. The owner of any animal declared under section 30 to be unfit for use in a hackney-carriage shall, if he disposes of it, or removes it from the premises on which it is stabled, give notice of the fact to the Registering Officer, within one week of such disposal or removal, intimating at the same time the name and address of the person to whom he has disposed of it and the place to which it has been removed.

22. Notice of death of a registered horse shall also be given to the Registering Officer, who on receipt of such notice shall cause the entry concerned to be cancelled in the "Register of horses" and the certificate of registration to be withdrawn.

23. No owner shall permit any horse to work continuously in any hackney-carriage in excess of the following scale of time :—

| Class of carriage. | Maximum period allowed to be worked | Minimum period of rest |
|---|---|---|
| First, second and third if drawn by two horses ... | 10 hours ... ... | 14 hours |
| First, second and third if drawn by one horse ... | 8 " ... ... | 16 " |

The following particulars shall be entered in a register to be kept by every owner for the purposes of by-law No. 22.—

| Date | Registered number and class of carriage | Number of horse or horses used to draw the carriage together with description | Hour of leaving stable | Hour of return to stable | Names of drivers and attendants | Signature of owner. | Signature and rank of inspecting officer |
|---|---|---|---|---|---|---|---|
| | | | | | | | |

### Publication of list of fares.

24 The list of fares prepared by the Commissioners with reference to the scale of rates laid down by by law No 16 shall be published in such a manner as the Commissioners shall deem proper.

### Registers and licenses.

25 The following particulars shall be entered in the registers and licenses under this Act.—

#### (1) Hackney-carriage license.

##### Particulars of license.

1. The class and the number assigned to the carriage in the register
2. The name, father's name and residence of the owner, the description of the carriage and the place where the carriage is kept
3. The number and description of horses to be employed in drawing such carriage
4. The number of passengers the carriage is licensed to carry
5. The date on which the license was granted
6. That the carriage shall ply for hire at any of the public stands in the town and suburbs of Bhadreswar and not at any other place.
7. Signature of the Registering Officer.

#### (2) Register of Hackney-carriages.

1. The class and number assigned to the carriage in the register
2. The certificate numbers.
3. Date on which license was granted
4. Owner's and his father's names
5. Place of residence
6. Stable locality
7. Holding number.
8. Driver's and his father's names
9. Place of residence.
10. Period of suspension or cancellation
11. Date of renewal.
12. Duplicate ticket.
13. Duplicate license
14. Thumb mark or signature of drivers
15. Date of conviction.
16. Section of law.
17. Punishment inflicted.
18. Date of offence.
19. Offence.
20. Ownership transferred to.
21. Date of transfer
22. Signature of the Registering Officer.
23. Remarks.

#### (3) Horse Register.

1. Serial number.
2. Class of hackney-carriage in which the horse to be used.
3. To be used singly or in pair.
4. Owner's and his father's names.
5. Owner's address.
6. Place where it is intended to keep the horse
7. Date on which license was granted.
8. Ownership transferred to.
9. Date of transfer.
10. Date of notice issued to owner.
11. Date of disposal of notices.
12. Signature of the Registering Officer.
13. Remarks.

**(4) Hackney-carriage Driver's License.**

1 The number of license, the name, father's name, place of abode and age of the person to whom license is granted.
2. The date on which the license was granted
3. The class and number of the hackney-carriage he is allowed to drive.
4. Thumb mark or signature of the driver
5. Date of expiry of license.
6. A summary of the more important statutory provisions and by-laws affecting drivers of hackney-carriages
7. Signature of the Registering Officer.

**(5) Horse License.**

1. The class of hackney-carriage with which the horse is to be used, and whether it is to be used singly or in pair.
2 The name and father's name of the owner, residence of the owner
3. The number assigned to the horse in the register.
4. The place where it is intended to keep the horse.
5. The date on which the license was granted.
6 The date on which the license expires
7. Signature of the Registering Officer.

**Minister in charge: The Hon'ble Sir S. N. Banarji, Kt.**

**Calcutta.**

*No 2235M —The 17th July 1923* —In exercise of the power conferred by sub-section (*1*) of section 35 of the Calcutta Municipal Act, 1899 (Bengal Act III of 1899), the Government of Bengal (Ministry of Local Self-Government) are pleased to sanction the grant, by the Corporation of Calcutta, to Mr S N Mallick, Chairman of the Corporation, of privilege leave for twenty-four days, with effect from the 12th May 1923.

**Minister in charge: The Hon'ble Sir S. N. Banarji, Kt.**

**24-Parganas.**

*No 170T.M —The 16th June 1923.*—In exercise of the power conferred by clause (*a*) of section 59 of the Bengal Municipal Act, 1884 (Bengal Act III of 1884), the Government of Bengal (Ministry of Local Self-Government) are pleased to approve the resolution passed by the Commissioners of the South Dum-Dum Municipality, in the district of the 24-Parganas, under section 27 of that Act, electing Babu Rash Behari Mondal to be Chairman of that Municipality, *vice* Mr David D. Boath, resigned.

**Minister in charge: The Hon'ble Sir S. N. Banarji, Kt.**

**Tippera.**

*No 2275L S.-G.—The 19th July 1923* —In exercise of the powers conferred by sub-section (*1*) of section 6 of the Bengal Village Self-Government Act, 1919 (Bengal Act V of 1919), read with section 22 of the Bengal General Clauses Act, 1899 (Ben. Act I of 1899), and on the recommendation of the Tippera District Board made at a meeting, the Government of Bengal (Ministry of Local Self-Government) are pleased to direct that the following amendment be made in notification No. 1737 L S -G , dated the 2nd June 1920, namely :—

For the word "Austagram" in the 4th column under the heading "Name of Union" against the word "Tippera" in the 1st column, *substitute* the word "Talshahar."

S. W. GOODE,
*Secretary to the Government of Bengal (offg )*

---

ERRATUM.

**Minister in charge: The Hon'ble Sir S. N. Banarji, kt.**

**Hooghly.**

*No. 2277M.—The 19th July 1923.*—In notification No. 97T.-M., dated the 30th May 1913, appointing certain gentlemen to be Commissioners of the Baidyabati Municipality, in the district of Hooghly, published at page 752, Part I of the *Calcutta Gazette*, dated the 6th June 1923.

*for*

Kiran Chandra Mukharji,

*read*

Kiran Kumar Mukharji.

S. W. GOODE,
*Secretary to the Government of Bengal, (offg.).*

## MEDICAL.

**Minister in charge: The Hon'ble Sir S. N. Banarji, Kt.**

**Murshidabad.**

*No. 1896Medl.—The 21st July 1923.*—Major S. C. Chuckerbutty, I.M.S., Superintendent, Central Mental Hospital, Berhampore, is allowed leave for twelve months in and out of India, viz., leave on average pay for eight months (including one month and three days on account of privilege leave at his credit), under article 81 (*b*) (*i*) of the Fundamental Rules and leave on half average pay for the remaining period under article 81 (*d*) of those rules, with effect from the 1st June 1923.

**Minister in charge: The Hon'ble Sir S. N. Banarji, Kt.**

**Murshidabad.**

*No. 1898Medl.—The 21st July 1923.*—Military Assistant Surgeon W. G. H. Warner, I.M.D., Deputy Superintendent, Central Mental Hospital, Berhampore, is appointed to act as Superintendent of the institution in addition to his own duties, during the absence, on leave, of Major S. C. Chuckerbutty, I.M.S., or until further orders.

S. W. GOODE,

*Secretary to the Government of Bengal (offg.).*

---

## PUBLIC HEALTH.

**Minister in charge: The Hon'ble Sir S. N. Banarji, Kt.**

**24-Parganas.**

*No. 1685P.H.—The 21st July 1923.*—The following draft of a by-law, which has been framed by the Commissioners of the South Suburban Municipality, in the district of the 24-Parganas, under section 350 of the Bengal Municipal Act, 1884 (Bengal Act III of 1884), and which the Government of Bengal (Ministry of Local-Self-Government) propose to confirm under section 351 of the Act, is published for the information of persons likely to be affected thereby.

The draft will be taken into consideration on the 15th September 1923, and any objection or suggestion received by the undersigned through the District Magistrate before that date will be duly considered —

*Draft by-law.*

Any person having possession of or control over any land or water on or in which there exists any water-hyacinth shall, if so required by a notice in writing signed by the Chairman or Vice-Chairman of the Municipality and stating clearly the boundaries of the area to which the notice applies, destroy or remove such water hyacinth within the period mentioned in such notice.

Penalty, Rs. 10; in a continuous offence, Rs 2 per day.

**Minister in charge: The Hon'ble Sir S. N. Banarji, Kt.**

**Hooghly.**

*No. 1687P.H.—The 21st July 1923.*—The following draft of a by-law which has been framed by the Commissioners of the Serampore Municipality in the district of Hooghly, under section 350 of the Bengal Municipal Act, 1884 (Ben. Act III of 1884), and which the Government of Bengal (Ministry of Local Self-Government) propose to confirm under section 351 of that Act, is published for the information of persons likely to be affected thereby.

2. The draft will be taken into consideration on the 15th September 1923, and any objection or suggestion received by the undersigned through the District Magistrate before that date will be duly considered.—

*Draft by-law for the Serampore Municipality under section 350 of the Bengal Act III of 1884.*

Eradication of water-hyacinth

51A. Any person having possession of or control over any land or water on or in which there exists any water-hyacinth shall, if so required by a notice in writing signed by the Chairman or Vice-Chairman of the municipality, destroy or remove such water-hyacinth within the period mentioned in such notice, and that such notice shall be issued as often as necessary.

Fine, Rs. 10; daily fine, Rs. 2.

**Minister in charge: The Hon'ble Sir S. N. Banarji, Kt.**

**24-Parganas.**

*No. 1691P.H.—The 23rd July 1923.*—In exercise of the power conferred by sub-section (*3*) of section 349C of the Bengal Municipal Act, 1884 (as amended by Bengal Act II of 1914), the Government of Bengal (Ministry of Local Self-Government) are pleased to declare Part XIB of the said Act (as so amended) to be in force in each of the municipalities mentioned below:—

| Division | District | Name of municipality |
|---|---|---|
| Presidency | ... 24-Parganas | ... Halisahar. |
| | | Kanchrapara. |

**Minister in charge : The Hon'ble Sir S. N. Banarji, Kt.**

**24-Parganas.**

*No. 1694 P.H.—The 23rd July 1923.*—In exercise of the power conferred by sub-section (*1*) of section 349D of the Bengal Municipal Act, 1884 (as amended by Bengal Act II of 1914), the Government of Bengal (Ministry of Local Self-Government) are pleased to fix the class and the number of Health Officers and Sanitary Inspectors to be appointed for each of the municipalities, as shown against each, in the annexed list :—

| Division. | District. | Name of municipality. | Number and class of Health Officer | Number and class of Sanitary Inspector |
|---|---|---|---|---|
| Presidency ... ... | 24-Parganas ... | Halishahar .. | Nil | 1 Second class |
| | | Kanchrapara | Nil | |

S. W GOODE,
*Secretary to the Government of Bengal (offg.).*

## Orders by the Surgeon-General with the Government of Bengal.

*No. 10732, dated Calcutta, the 13th July 1923.*—Assistant Surgeon Dabiruddin Ahmad, Demonstrator of Anatomy, Medical College, Calcutta, is appointed to be Teacher of Anatomy, Campbell Medical School, *vice* Assistant Surgeon Dinesh Chandra Chakravarti.

*No. 10785, dated Calcutta, the 13th July 1923.*—Assistant Surgeon Dinesh Chandra Chakravarty, F.R.C.S. (Edin.), Teacher of Anatomy, Campbell Medical School, Calcutta, is appointed to be Teacher of Clinical Surgery in that institution, *vice* Assistant Surgeon Upendra Nath Ray Chowdhuri.

*No. 10787, dated Calcutta, the 13th July 1923.*—Assistant Surgeon Upendra Nath Ray Chowdhuri, Teacher of Clinical Surgery, Campbell Medical School, Calcutta, is appointed to be Teacher of Surgery in that institution, *vice* Assistant Surgeon Karuna Kumar Chatterji, F.R.C.S.I.

*No. 10789, dated Calcutta, the 13th July 1923.*—Assistant Surgeon Pratulpati Ganguli, officiating Civil Surgeon, Rajshahi, is appointed to be Teacher of Medicine, Dacca Medical School, *vice* Assistant Surgeon Rai Barada Sanker Bhattacharji Bahadur.

*No. 10792, dated Calcutta, the 13th July 1923.*—Assistant Surgeon Rai Barada Sanker Bhattacharji Bahadur, Teacher of Medicine, Dacca Medical School, is appointed to be Teacher of Medicine, Campbell Medical School, Calcutta, *vice* Assistant Surgeon Rai Upendra Nath Brahmachari Bahadur.

*No. 10795, dated Calcutta, the 13th July 1923.*—Assistant Surgeon Upendra Nath Das, F.R.C.S. (Edin.), officiating House Surgeon, Presidency General Hospital, Calcutta, is appointed to be Demonstrator of Anatomy, Medical College, Calcutta, *vice* Assistant Surgeon Dabiruddin Ahmad.

*No. 10821, dated Calcutta, the 17th July 1923.*—Assistant Surgeon Jyoti Prasad Mitra did supernumerary duty at the Medical College Hospital, Calcutta, from the 20th June 1923 to the 6th July 1923, both days inclusive.

*No. 10823, dated Calcutta, the 17th July 1923.*—Assistant Surgeon Brindaban Chandra Bank is placed on supernumerary duty at the Medical College Hospitals, Calcutta, with effect from the 5th July 1923 until further orders.

D. McCAY, LT.-COL., I.M.S.,
*Surgeon-General with the Government of Bengal (offg.).*

## EDUCATION DEPARTMENT.

### NOTIFICATIONS.

**Minister in charge : The Hon'ble Mr. P. C. Mitter, C.I.E.**

**Chittagong.**
**Dacca.**
**Calcutta.**

*No. 2054 Edn.—The 14th July 1923.*—Mr. Bhupati Mohan Sen, Vice-Principal, Chittagong College, on reversion from the Dacca University, is appointed to act as a professor, Presidency College, Calcutta, with effect from the 2nd July up to the 31st July 1923, *vice* Rai Jyoti Bhushan Bhaduri Bahadur, on leave. He is also appointed substantively to be professor, Presidency College, with effect from the 1st August 1923, in the vacancy caused by the transfer of Dr. C. E. Cullis from the Presidency College to the Bengal Engineering College.

**Minister in charge : The Hon'ble Mr. P. C. Mitter, C.I.E.**

*No. 2055Edn.—The 14th July 1923.*—Babu Manju Gopal Bhattacharji, of the Bengal Educational Service, on reversion from the Dacca University, is appointed to be a professor, Presidency College, Calcutta, with effect from the 1st July 1923, *vice* Babu Bhupendra Chandra Basu, resigned.

**Dacca.**
**Calcutta.**

**Minister in charge : The Hon'ble Mr. P. C. Mitter, C.I.E.**

*No. 2056Edn.—The 14th July 1923.*—Babu Manmatha Nath Mukharji, Professor, Chittagong College, on deputation to the Dacca University, reverts to his substantive appointment with effect from the 1st July 1923.

**Chittagong.**
**Dacca.**

**Minister in charge : The Hon'ble Mr. P. C. Mitter, C.I.E.**

*No. 2066Edn.—The 18th July 1923.*—Babu Gopal Chandra Bhattacharji, officiating Professor, Chittagong College, was allowed leave from the 27th November to the 2nd December 1922 (both days inclusive), viz., leave on leave salary equivalent to full pay for five days and leave on leave salary equivalent to half pay for one day, under rule 2 (*a*) of the rules issued under the Government of Bengal, Finance Department order No. 19463-F., dated the 23rd December 1921, and under the Government of India, Finance Department order No. 783-C S.R., dated the 18th July 1922.

**Chittagong.**

**Minister in charge : The Hon'ble Mr. P. C. Mitter, C.I.E.**

*No. 2098Edn.—The 20th July 1923.*—Mr. J. V. Francies, Assistant Professor of Drawing, Bengal Engineering College, is allowed leave on average pay for five months and four days (including four days on account of privilege leave on full pay at his credit), with effect from the 5th November 1923, under rule 81 (*b*) (*i*) of the Fundamental Rules, and is permitted to prefix the long vacation of the College from the 9th August 1923 to the 4th November 1923 to his leave under rule 82 (*d*) of those rules.

**Howrah.**

**Minister in charge : The Hon'ble Mr. P. C. Mitter, C.I.E.**

*No. 2101Edn.—The 20th July 1923.*—Maulvi Musharraf Hussain, Assistant Inspector of Schools for Muhammadan Education, Dacca Division, was allowed leave on average pay on medical certificate for two months under the proviso to rule 81 (*b*) (*ii*) of the Fundamental Rules, in extension of the leave already granted to him.

**Dacca Divn.**

**Minister in charge : The Hon'ble Mr. P. C. Mitter, C.I.E.**

*No 2124Edn.—The 23rd July 1923.*—Maulvi Abdul Khaleq, now officiating head master, Government Moslem High School, Chittagong, is appointed substantively to the Bengal Educational Service as head master, Government Moslem High School, Dacca, with effect from the 22nd July 1923, or any subsequent date on which he joins the appointment, *vice* Khan Bahadur Maulvi Kazi Zahirul Haq, retired.

**Chittagong.**
**Dacca.**

**Minister in charge : The Hon'ble Mr. P. C. Mitter, C.I.E.**

*No 2132Edn.—The 23rd July 1923.*—Maulvi Sayyid Mohsin Ali, Assistant Inspector of Schools for Muhammadan Education, Chittagong Division, is allowed, under article 336 of the Civil Service Regulations, leave on medical certificate for six months and sixteen days, viz., leave on half average salary from the 7th June 1923 to the 1st August 1923, and on quarter average salary for the remaining period in extension of the leave already granted.

**Chittagong Divn.**

**Minister in charge : The Hon'ble Mr. P. C. Mitter, C.I.E.**

*No. 2134Edn.—The 23rd July 1923.*—Mrs Indumukhi Chakrabarti (*née*, Nath), Assistant Inspectress of Schools, Mymensingh, in the Bengal Educational Service (Women's branch), is allowed leave for one year on medical certificate under rules 81 (*c*) (*i*), 87 and 88 of the Fundamental Rules, in extension of the leave already granted to her, viz., leave on half average pay for nine months and ten days and leave without allowances for the remaining period.

**Mymensingh.**

J. N. ROY,
*Secretary to the Government of Bengal.*

---

*No. 2108Edn.—The 21st July 1923.*—Mr. Egerton Smith, Inspector of European Schools, Bengal, now officiating Principal, Krishnagar College, is appointed to be a Master of Method, David Hare Training College, Calcutta, with effect from the 12th August 1921, *vice* Mr. A. Mercer, deceased, but continues to act as Principal, Krishnagar College, until further orders.

**Nadia.**
**Calcutta.**

*No. 2109Edn.—The 21st July 1923.*—Mr W. F. Papworth, officiating Inspector of European Schools, Bengal, is confirmed, with the approval of the Secretary of State for India, in the post and in the Indian Educational Service, with effect from the 12th August 1921, *vice* Mr. Egerton Smith, transferred.

W. W. HORNELL,
*Deputy Secretary to the Government of Bengal*

---

**MISCELLANEOUS.**

**Minister in charge: The Hon'ble Mr. P. C. Mitter, C.I.E.**

**Mymensingh.**

*No 1307Mis.—The 16th July 1923.*—In exercise of the power conferred by section 3 of the Bengal Muhammadan Marriages and Divorces Registration Act, 1876 (Bengal Act I of 1876), the Government of Bengal (Ministry of Education) are pleased to appoint Maulvi Shah Amjad Ali to be a Muhammadan Registrar within police-station Haluaghat, in the district of Mymensingh.

**Minister in charge: The Hon'ble Mr. P. C. Mitter, C.I.E.**

**Mymensingh.**

*No. 1308Mis.—The 16th July 1923.*—In exercise of the power conferred by section 2 of the Kazis Act, 1880 (Act XII of 1880), the Government of Bengal (Ministry of Education) are pleased to appoint Maulvi Shah Amjad Ali to be the Kazi for the celebration of marriages and the performance of other rites and ceremonies within police-station Haluaghat, in the district of Mymensingh.

**Minister in charge: The Hon'ble Mr. P. C. Mitter, C.I.E.**

**Rangpur.**

*No 1330Mis—The 19th July 1923*—It is notified for general information that the Government of Bengal (Ministry of Education) are pleased to sanction the further retention for one year, with effect from the 1st July 1923, of the office of the Joint Sub-Registrar of Rangpur having concurrent jurisdiction with the Sadar Registration office

**Minister in charge: The Hon'ble Mr. P. C. Mitter, C.I.E.**

*No. 1331Mis—The 19th July 1923*—The report of Examination Board on the first half-yearly Departmental Examination of probationers held on the 28th and 29th May 1923, having been received, the probationers named below are declared to have passed the examination completely :—

(In order of merit)

*1. Maulvi Mataheral Karim.
2 Babu Gobinda Charan Samanta
3 „ Mohini Ranjan Bhattacharjee
4 „ Pramatha Nath Mukherjee
5. „ Bimal Chandra Nag
6 „ Ratish Chandra Roy.

* Passed with credit

**Minister in charge: The Hon'ble Mr. P. C. Mitter, C.I.E.**

**Nadia.**

*No. 1333Mis—The 19th July 1923*—In exercise of the power conferred by section 3 of the Bengal Muhammadan Marriages and Divorces Registration Act, 1876 (Bengal Act I of 1876), the Government of Bengal (Ministry of Education) are pleased to appoint Maulvi Habibur Rahman to be a Muhammadan Registrar within police-stations Ranaghat, Santipur, Chakdah and Haringhata in the district of Nadia

**Minister in charge: The Hon'ble Mr. P. C. Mitter, C.I.E.**

**Nadia.**

*No 1334Mis—The 19th July 1923.*—In exercise of the power conferred by section 2 of the Kazis Act, 1880 (Act XII of 1880), the Government of Bengal (Ministry of Education) are pleased to appoint Maulvi Habibur Rahman to be the Kazi for the celebration of marriages and the performance of other rites and ceremonies within police-stations Ranaghat, Santipur, Chakdah and Haringhata in the district of Nadia.

**Minister in charge: The Hon'ble Mr. P. C. Mitter, C.I.E.**

**Calcutta.**

*No. 1340Mis.—The 19th July 1923.*—Khan Sahib Qurbanullah, Inspector of Registration offices, is appointed to be Registrar of Calcutta, with effect from the 23rd July 1923, *vice* Babu Probodh Chandra Chatterjee, about to retire.

J. N. ROY,
*Secretary to the Government of Bengal.*

## Orders by the Director of Public Instruction, Bengal.

### SUBORDINATE EDUCATIONAL SERVICE.

*The 14th July 1923.*

*No 400A*.—Babu Bejoy Ranjan Das Gupta is appointed to act as Lecturer in English, Chittagong College, and in the scale of Rs. 150—10—400, with effect from the date he joins the appointment, *vice* Babu Debendra Kumar Sen, temporarily promoted to the Bengal Educational Service, in terms of Government notification No 1141-Edn., dated the 26th March 1923.

**Chittagong.**

*No. 401A*.—Maulvi Syed Abul Bazel Anser Ali, assistant master, Nawab Bahadur's Institution, Murshidabad, on Rs. 75—5—200, was allowed, under article 271 of the Civil Service Regulations, privilege leave for one month and twenty-nine days with effect from the 13th February 1923.

**Murshidabad.**

*No. 402A*.—Maulvi Khandakar Hedayetun Nabi, assistant master, Nawab Bahadur's Institution, Murshidabad, on Rs 75—5—200, is granted, in terms of article 271 of the leave rules of July 1920, privilege leave for twelve days from the 11th to the 22nd December 1922 (both days inclusive).

**Murshidabad.**

2. He is permitted to affix the last X'mas and the New Year's day holidays to his leave.

*The 16th July 1923.*

*No. 403A*.—Maulvi Abdul Karim, assistant master, Mymensingh Zilla School, on Rs 75—5—200, was allowed, in terms of the Government of India, Finance Department, notification No. 2099C.S.R, dated 27th November 1920, commuted furlough for three months in extension of the leave granted to him in this office notification No. 468A., dated 20th June 1922.

**Mymensingh.**

*No. 404A*.—Maulvi Gholam Kiberia, assistant master, Nawab Bahadur's Institution, Murshidabad, on Rs. 75—5—200, was allowed, in terms of article 276(*a*) of the leave rules of July 1920, privilege leave for five days with effect from 2nd January 1923.

**Murshidabad.**

He was permitted to prefix to his leave the last X'mas and the New Year's day holidays

*No. 405 A*.—An exchange of appointments is sanctioned between—

(1) Maulvi Muhammad Khorshed Hossain, Subdivisional Inspector of Schools, Khulna, on Rs. 150—10—250, and

**Khulna.**

(2) Babu Dakshina Ranjan Sen, Subdivisional Inspector of Schools, Calcutta, on Rs. 150—10—250 (on probation).

**Calcutta.**

*No. 406A*.—Babu Brojendra Nath Maitra, Sub-Inspector of Schools, Alipur Duars, on Rs 75—5—200, was allowed, in terms of rule 81 (*b*) (*ii*) of the Fundamental Rules, leave on average pay for two months and nineteen days (the entire period being on account of privilege leave at his credit), in extension of the leave granted to him in this office notification No. 93A., dated the 14th February 1923.

**Jalpaiguri.**

2. The officiating arrangement already sanctioned was allowed to continue.

*No. 407A*.—Maulvi A. M. Muhammad Wajih, English teacher, Hooghly Madrasah, on Rs. 75—5—200, is granted, in terms of rule 81 (*b*) (*ii*) of the Fundamental Rules, leave on medical certificate on average pay for one month with effect from 16th June 1923.

**Hooghly.**

2 Maulvi Syed Sharfaraz Ali Khan, vernacular teacher, Hooghly Madrasah, on Rs 35—2—75—3—90, is appointed to act as English teacher of the same Madrasah, on an allowance of Rs. 75 per mensem in the scale of Rs. 75—5—200, with effect from 18th June 1923, *vice* Maulvi A. M. Muhammad Wajih, on leave.

*No. 408A*.—In modification of the orders published in this office notification No 192A., dated the 7th April 1923, Maulvi Muhammad Hossain, assistant master, Hooghly Branch School, on Rs. 75—5—200, was allowed, in terms of rule 81 (*b*) (*ii*) of the Fundamental Rules, leave on medical certificate on average pay for one month and fourteen days, with effect from the 11th September 1922.

**Hooghly.**

*The 17th July 1923.*

*No. 409A*.—Babu Rasaranjan Sen Mazumdar, officiating Sub-Inspector of Schools, Bistupur circle, in the district of 24-Parganas, in the scale of Rs. 75—5—200, was allowed, in terms of clause 2 (*a*) of the Local Government notification No. 19463-F., dated 23rd December 1921, leave on full average pay for thirteen days with effect from 18th June 1923.

**24-Parganas.**

2. He was also permitted to prefix and to affix to his leave Sundays, the 17th June and the 1st July 1923.

*No. 410A.*—In supersession of all the previous orders on the subject, Mrs. Prativa Bose, assistant mistress, Dr. Khastagir's High School for Girls, Chittagong, on Rs. 75—5—200 (formerly in class VI of the Subordinate Educational Service), was allowed leave from 7th November 1921 to 15th February 1923 (both days inclusive), viz. :—

Chittagong.

(i) privilege leave on half pay under article 271 of the leave rules of July 1920 for one month and twenty-five days from 7th November 1921 to 31st December 1921 (both days inclusive),

(ii) leave on average pay on medical certificate under rule 81 (*b*) (*ii*) of the Fundamental Rules for eight months from 1st January 1922 to 31st August 1922,

(iii) leave on half average pay in terms of rule 81 (*d*) of the Fundamental Rules for four months and twenty-four days from 1st September 1922 to 24th January 1923, and

(iv) leave without allowances under rule 85 (*b*) of the Fundamental Rules for twenty-two days from 25th January 1923 to 15th February 1923.

She was permitted to prefix to her leave the Pujah holidays of the school for the year 1921.

2. Miss Sudhansubala Dutta is declared to have acted as assistant mistress, Dr Khastagir's High School for Girls, Chittagong, on an allowance of Rs. 75 per mensem and in the scale of Rs. 75—5—200 with effect from the 7th November 1921, *vice* Mrs. Prativa Chaudhuri, on leave

*No. 411A.*—The following arrangements are sanctioned :—

Bogra. Rangpur.

(1) Pandit Hriday Gobinda Vidyalankar, head pandit, Bogra Zilla School, on Rs 60—4—160, is appointed to act as head pandit, Rangpur Zilla School, on his own pay with effect from the date he joins the appointment, *vice* Babu Prasanna Kumar Nandi, on deputation.

(2) Pandit Himansu Nath Mukhoti (Bidyabhushan), officiating head pandit, Rangpur Zilla School, is appointed to act as head pandit, Bogra Zilla School, and in the scale of Rs 60—4—160, *vice* Pandit Hriday Gobinda Vidyalankar, transferred.

*The 18th July 1923.*

*No. 412A.*—In partial modification of the orders published in this office notification No 177A (*1*), dated 4th April 1923, Maulvi Nurul Haque, assistant master, Dinajpur Zilla School, on Rs. 75—5—200, was allowed, in terms of rule 81 (*b*) (*ii*) of the Fundamental Rules, leave on medical certificate on average pay for four months with effect from 17th January 1923.

Dinajpur.

*No. 413A.*—Babu Keshab Chandra Sarkar, Sub-Inspector of Schools, Patashpur, Midnapore, on Rs. 75—5—200, is granted, in terms of rule 81 (*b*) (*ii*) of the Fundamental Rules, leave on average pay for one month (the entire period being due on account of privilege leave at his credit), with effect from 2nd July 1923.

Midnapore.

He is also permitted to prefix to his leave, Sunday, the 1st July 1923.

*No. 414A.*—In modification of the orders published in this office notification No. 320A., dated the 17th May 1923, Babu Bankim Chandra Roy, assistant master, Rangpur Zilla School, on Rs. 75—5—200, was allowed, in terms of rule 81 (*b*) (*ii*) of the Fundamental Rules, leave on medical certificate on average pay for two months and eight days with effect from 5th March 1923.

Rangpur.

He is permitted to prefix to his leave the Doljatra holiday on the 3rd March 1923 and Sunday, the 4th March 1923, and to affix Sunday, the 13th May 1923, and the summer vacation of the school extending from the 14th May 1923 to 15th June 1923.

2. Babu Narendra Lal Ganguli is declared to have acted as assistant master, Rangpur Zilla School, on an allowance of Rs. 75 per mensem in the scale of Rs. 75—5—200, with effect from the date he joined the appointment, *vice* Babu Bankim Chandra Roy, on leave.

*No. 415A.*—In supersession of this office notification No. 70A., dated 31st January 1923, Babu Dwarka Nath Majumdar, Sub-Inspector of Schools, Chandpur, Tippera, on Rs. 75—5—200, was allowed, in terms of rule 81 (*b*) (*ii*) of the Fundamental Rules, leave on average pay for four months (the entire period being on account of privilege leave at his credit) with effect from 24th November 1922.

Tippera.

2. Maulvi Aminul Islam is declared to have acted as Sub-Inspector of Schools, Chandpur, Tippera, on an allowance of Rs. 75 per mensem, in the scale of Rs. 75—5—200, with effect from the date he joined the appointment, *vice* Babu Dwarka Nath Majumdar, on leave.

*No. 416A.*—Consequent on the establishment of an Islamic Intermediate College at Dacca, sanctioned in the Government of Bengal, Education Department, letter No. 953Edn, dated the 14th March 1923, the following arrangements are sanctioned on a temporary basis until further orders.—

Dacca.
Chittagong.

(1) Maulvi Abdur Rahman, assistant maulvi, Dacca Madrasah, on Rs. 75—5—200, is appointed temporarily as Lecturer in Arabic, Islamic Intermediate College, Dacca, and in the scale of Rs. 150—10—400, with effect from the 1st July 1923.

(2) Maulvi Abul Kasem, Assistant Lecturer in English, Dacca University, is appointed temporarily as Lecturer in English, Islamic Intermediate College, Dacca, and in the scale of Rs. 150—10—400, with effect from the date he joins the appointment.

(3) Maulvi Muhammad Yusuf is appointed temporarily as Lecturer in English, Islamic Intermediate College, Dacca, and in the scale of Rs. 150—10—400, with effect from the date he joins the appointment.

(4) Maulvi Velayet Hossain, assistant maulvi, Dacca Madrasah, on Rs. 60—4—160, now officiating assistant maulvi, Chittagong Madrasah, on Rs. 75—5—200, is appointed temporarily as Arabic teacher, Islamic Intermediate College, Dacca, and in the scale of Rs. 75—5—200, with effect from the date he joins the appointment.

(5) Maulvi Jamaluddin Ahmed, head maulvi, Chittagong Collegiate School, on Rs. 60—4—160 (now drawing Rs. 140 per month), is appointed temporarily as Arabic teacher, Islamic Intermediate College, Dacca, and in the scale of Rs. 75—5—200, on the usual acting allowance admissible under the rules, with effect from the date he joins the appointment.

(6) Maulvi Naziruddin, assistant maulvi, Dacca Madrasah, on Rs. 60—4—160, is appointed temporarily as Arabic teacher of the same Madrasah and in the scale of Rs. 75—5—200, on the usual acting allowance admissible under the rules, with effect from the 1st July 1923, *vice* Maulvi Abdur Rahman, temporarily promoted.

(7) Maulvi Nural Alam, officiating English teacher, Chittagong Madrasah, on Rs. 75—5—200, is appointed on his own pay temporarily as Arabic teacher of the same Madrasah, with effect from the date he joins the appointment, *vice* Maulvi Velayet Hossain, transferred.

*No. 417A.*—The following arrangements are sanctioned:—

Birbhum.

(1) Babu Kali Kinkar Das, Sub-Inspector of Schools, Rampurhat, Birbhum, on Rs. 75—5—200, is appointed to act as Sub-Inspector of Schools, Birbhum Sadar, on the pay of his own grade, with effect from the date he joins the appointment, *vice* Babu Jatindra Mohan Sinha, on deputation.

(2) Babu Kshitish Chandra Kushari is appointed to act as Sub-Inspector of Schools, Rampurhat, Birbhum, and in the scale of Rs. 75—5—200, with effect from the date he joins the appointment, *vice* Babu Kali Kinkar Das, on deputation.

*The 19th July 1923.*

Chittagong.
Dacca.

*No. 418A.*—Maulvi Ataul Hakim, Lecturer in Mathematics, Chittagong College, in the scale of Rs. 150—10—400, on deputation to the University of Dacca, reverts to his substantive appointment with effect from the 1st July 1923.

Dacca.
Bankura.
Chittagong.

*No. 419A.*—Babu Manmohan Chatterjee of the Subordinate Educational Service, in the scale of Rs. 75—5—200, on reversion from the University of Dacca, is appointed to be an assistant master, Bankura Zilla School, in the scale of Rs. 75—5—200, with effect from the 1st July 1923, *vice* Babu Srikanta Routh, deceased.

He is also appointed to act from the 6th July 1923 as Demonstrator in Physics, Chittagong College, and in the scale of Rs. 150—10—250, *vice* Babu Upendra Chandra Bhattacharyya, on deputation to the University of Dacca.

W. W. HORNELL,
*Director of Public Instruction, Bengal.*

**Orders by the Inspector-General of Registration, Bengal.**

*No. 282.—The 14th July 1923.*—Maulvi Kazi Abdul Majid, Sub-Registrar, attached to Dacca, is allowed leave on average pay for fifteen days, under rule 81 (*b*) (*ii*) of the Fundamental Rules, in extension of the leave granted to him in this department notification No. 124, dated the 16th April 1923.

**Dacca.**

*No. 283.—The 14th July 1923.*—Babu Ramani Mohan Mazumdar, Sub-Registrar of Jaldhaka, in the district of Rangpur, is allowed leave for nine months, viz., leave on average pay for eight months (eighteen days being on account of privilege leave at credit), under rule 81 (*b*) (*ii*) of the Fundamental Rules, and leave on half average pay for one month, under rule 81 (*d*) of the said rules, with effect from the 30th March 1923.

**Rangpur.**

*No. 284.—The 14th July 1923.*—Babu Phupati Ranjan Sen, Sub-Registrar attached to Sadar Registration Office at Chittagong, acted as Sub-Registrar of Anwara, in the same district, from the 25th May 1923, to the 27th May 1923 (both days inclusive) *vice* Mr Saleh Ahmad, on leave.

**Chittagong.**

*Erratum.—No 285.—The 14th July 1923.*—In line 4 of this department notification No. 228 dated the 12th June 1923, published at page 818, Part I of the *Calcutta Gazette*, dated the 20th June 1923, *for* "25th May 1923" *read* "20th May 1923."

*No. 286.—The 14th July 1923.*—Babu Hemendu Bikash Ray, Sub-Registrar attached to Chittagong, is appointed to act as Sub-Registrar of Anwara, in the same district, *vice* Maulvi Saleh Ahmad, on leave, or until further orders, with effect from the 1st June 1923.

**Chittagong.**

*No. 287.—The 14th July 1923.*—Babu Amode Lal Barman, Sub-Registrar, while at Magura, in the district of Khulna, was allowed leave on average pay for seven days, under rule 81 (*b*) (*ii*) of the Fundamental Rules, with effect from the 23rd March 1923.

**Khulna.**

This cancels this department notification No. 76, dated the 9th March 1923, granting him leave for two months.

*No. 288.—The 14th July 1923.*—Maulvi Jasimuddin Ahmad, Sub-Registrar, attached to Pabna, is appointed to act as Sub-Registrar of Sadullapur, in the district of Rangpur, with effect from the afternoon of the 4th July 1923, *vice* Maulvi Saiyid Abu Zafar, on leave.

**Pabna.**
**Rangpur.**

*No. 289.—The 14th July 1923.*—Babu Gobinda Charan Samanta, probationer attached to Hooghly, is appointed to act as Sub-Registrar of Shambazar, in the same district, with effect from the 29th June 1923, *vice* Babu Sasanka Sekhar Patabyal, on leave.

**Hooghly.**

*No. 290.—The 14th July 1923.*—Babu Kshitish Chandra Das, Sub-Registrar, substantively *pro tempore*, attached to Dacca, officiating at Babuganj, in the district of Bakarganj, is allowed leave on average pay for one month (entire period being on account of privilege leave at his credit), under subsidiary rules framed under rule 104 (*b*) of the Fundamental Rules, with effect from the date on which he avails himself of it.

**Dacca.**
**Bakarganj.**

*No. 291.—The 14th July 1923.*—Babu Sharat Chandra Mukharji, Sub-Registrar of Bongaon, in the district of Jessore, under orders of transfer to Alfadanga, in the same district, is allowed leave on average pay for three months (two months being on account of privilege leave at his credit), under rule 81 (*b*) (*ii*) of the Fundamental Rules, in extension of the leave granted to him in this department notification No. 191, dated the 25th May 1923.

**Jessore.**

*No. 292.—The 14th July 1923.*—Maulvi Muhammad Azharul Haq, Sub-Registrar of Goghat, in the district of Hooghly, is allowed leave on average pay for three months, under rule 81 (*b*) (*ii*) of the Fundamental Rules, in extension of the leave granted to him in this department notification No. 148 dated the 3rd May 1923.

**Hooghly.**

*No. 293.—The 14th July 1923.*—Babu Bhupendra Lal Ray, Sub-Registrar of Ramnagar, in the district of Nadia, is allowed leave on average pay for two months (entire period being on account of privilege leave at his credit), under rule 81 (*b*) (*ii*) of the Fundamental Rules, with effect from the date on which he may be relieved.

**Nadia.**

*No. 294.—The 17th July 1923.*—Maulvi Agha Ali Ahmad Shiraji, Sub-Registrar of Khandaghosh, in the district of Burdwan, is appointed to be Sub-Registrar of Asansol in the same district.

**Burdwan.**

*No. 295.—The 19th July 1923.*—Babu Kali Kumar Ain, Sub-Registrar of Phulbari, in the district of Dinajpur, is allowed leave on average pay for two months (entire period being on account of privilege leave at his credit), under rule 81 (*b*) (*ii*) of the Fundamental Rules, with effect from the 1st August 1923 or from any subsequent date on which he may be relieved.

**Dinajpur.**

*No. 296.—The 19th July 1923.*—Maulvi Amiruddin Ahmad, Sub-Registrar of Pirganj, in the district of Dinajpur, on leave, is appointed to be Sub-Registrar of Phulbari, in the same district.

**Dinajpur.**

*No. 297.—The 19th July 1923.*—Babu Dhanesh Chandra Sen, Sub-Registrar of Gaffargaon, in the district of Mymensingh, is allowed leave on average pay for four months (entire period being on account of privilege leave at credit), under rule 81 (*b*) (*ii*) of the Fundamental Rules, with effect from the 7th July 1923.

**Mymensingh.**

*No. 298.—The 19th July 1923.*—Babu Bidhu Bhusan Bhowmik, Sub-Registrar, attached to Dacca, is appointed to act until further orders as Sub-Registrar of Gaffargaon, in the district of Mymensingh, *vice* Babu Dhanesh Chandra Sen, on leave, with effect from the 7th July 1923.

**Dacca.**
**Mymensingh.**

*No. 299.—The 19th July 1923.*—Babu Binode Behari Sen (No. II), Sub-Registrar of Ulipur, in the district of Rangpur, was on leave on average pay for two months and twenty-two days (entire period being on account of privilege leave at credit), under rule 81 (*b*) (*ii*) of the Fundamental Rules, in extension of the leave granted to him in this department notification No. 271, dated the 22nd August 1922.

**Rangpur.**

This cancels this department notification No. 443, dated the 19th September 1922.

J. N. ROY,

*Inspector-General of Registration, Bengal (offg.).*

---

## FINANCE DEPARTMENT.

### NOTIFICATIONS.

*No. 6707F.—The 18th July 1923.*—The Governor in Council is pleased to declare the appointments of the Deputy Superintendents in the Bengal Government Press as gazetted, and the following officers are accordingly granted the status of Gazetted Officers :—

| | | |
|---|---|---|
| (1) Mr. George Wilfrid Davis | ... | Deputy Superintendent. |
| (2) „ Alfred James Chapple | ... | ditto. |
| (3) „ William Horace Shea | ... | ditto. |

A. MARR,

*Secretary to the Government of Bengal.*

### MISCELLANEOUS.

*No. 1530Mis.—The 13th July 1923.*—Under sub-section (*1*) of section 11 of the Bengal Amusements Tax Act, 1922, the Governor in Council is pleased to authorise Babu Sushil Chandra Ghosh, officiating Collector of Stamp Revenue and Deputy Collector of Land Revenue, Calcutta, to enter any place of entertainment within the areas mentioned in section 1, sub-section (*3*), clauses (*a*) and (*b*) of the said Act, with a view to seeing whether the provisions of Chapter I of the Act or any rules made thereunder are being complied with.

This supersedes the orders issued in Notification No. 1464-Mis., dated the 7th July 1923.

*No. 1531Mis.—The 16th July 1923.*—Under rule 12 of the rules made under sub-section (*1*) of section 12 of the Bengal Amusements Tax Act, 1922, published under Notification No. 2928-Mis., dated the 16th September 1922, the Governor in Council is pleased to appoint Babu Sushil Chandra Ghosh, officiating Collector of Stamp Revenue and Deputy Collector of Land Revenue, Calcutta, to be the officer referred to in clauses (*1*) and (*2*) of that rule, and to authorise him to exercise all the functions of that officer within the areas mentioned in section 1, sub-section (*3*), clauses (*a*) and (*b*) of the said Act.

This supersedes the orders issued in Notification No. 1465-Mis., dated the 7th July 1923.

A. MARR,
*Secretary to the Government of Bengal.*

---

## COMMERCE DEPARTMENT.

### CERTIFICATE OF APPROVAL.

No. 3407-Com., dated the 17th July 1923.

With reference to rule 7 of the rules issued by the Government of India with their resolution No. 7552—7581-121, dated the 15th September 1913, for regulating the grant by Local Governments of licenses to prospect for minerals and the grant of mining leases in British India, it is hereby certified that Mr. D. C. Nag, of Barodi, Narainganj, district Dacca, is approved by the Government of Bengal as a fit and proper person to whom such licenses or leases can be granted in the Presidency of Bengal.

2. Under rule 8 of the aforesaid rules this certificate will expire at midnight on the 31st of December 1923.

A. MARR,
*Secretary to the Government of Bengal.*

---

## MARINE DEPARTMENT.

### NOTIFICATIONS.

*No. 79 Marine.—The 17th July 1923.*—Mr. E. R. Kearns, Second Mate Leadsman, Bengal Pilot Service, is promoted to the grade of First Mate Leadsman, with effect from the 6th July 1923 P.M.

*No. 80 Marine.—The 17th July 1923.*—Mr. A. C. Davis, Second Mate Leadsman, Bengal Pilot Service, is promoted to the grade of First Mate Leadsman, with effect from the 9th July 1923.

*No. 81Marine.—The 18th July 1923.*—Mr. E. W. Bentley, Second Mate Leadsman, is granted leave on average pay for three weeks, with effect from the 27th June 1923, under rule 81 (*b*) (*i*) of the Fundamental Rules.

*No. 82Marine.—The 18th July 1923.*—Mr. D. L. Vine, Senior Master Pilot, is granted, under rule 81 (*b*) (*i*) of the Fundamental Rules, leave on average pay for two months in extension of the leave granted to him in Bengal Government notification No. 40Marine, dated the 20th April 1923.

*No. 83Marine.—The 20th July 1923.*—Mr. G. B. Hedley, 2nd Mate Leadsman, is promoted to the grade of 1st Mate Leadsman with effect from the 9th July 1923.

*No. 84Marine.—The 20th July 1923.*—Mr. J. S. Davis, Junior Master Pilot, is permitted to act as a Senior Master Pilot with effect from the 9th July 1923.

A. MARR,
*Secretary to the Government of Bengal.*

## PUBLIC WORKS DEPARTMENT.

### ESTABLISHMENT.

### NOTIFICATIONS.

**Minister in charge: The Hon'ble Nawab Saiyid Nawab Ali Chaudhuri, Khan Bahadur, C.I.E.**

*No 37.—The 14th July 1923.*—Babu Paresh Nath Sen, Electrical Assistant Engineer, is granted, under article 81 (*b*) (*ii*) of the Fundamental Rules and note thereunder (without medical certificate), leave on average pay (entirely on account of privilege leave at his credit) for a period of ten days from the 21st June 1923 to the 30th June 1923.

**Minister in charge: The Hon'ble Nawab Saiyid Nawab Ali Chaudhuri, Khan Bahadur, C.I.E.**

*No. 38.—The 23rd July 1923.*—Babu Priya Nath Chakrabatti, Assistant Engineer, is granted, under article 81 (*d*) of the Fundamental Rules, leave on half average pay for a period of three months in extension of the leave previously granted.

G. G DEY,
*Secretary to the Government of Bengal (offg.).*

## IRRIGATION DEPARTMENT.

### ESTABLISHMENT.

### NOTIFICATIONS.

**[Sixth publication.]**

*No. 21.—The 19th June 1923.*—The following draft of amendments, which, in exercise of the powers conferred by sections 6 and 11 of the Canals Act, 1864 (Bengal Act V of 1864), the Governor in Council intends to make in the rules and schedules of rates of tolls (published in Bengal Government notification No 5, dated the 19th June 1917, in Part I of the *Calcutta Gazette* of the 20th *idem*) for the Midnapore Canal with branch to Naraingar, is hereby published for the information of persons likely to be affected thereby

II. The draft will be taken into consideration on or after the 5th August 1923, and any objections or suggestions received by the undersigned before that date will be duly considered :—

*Draft amendments.*

1. For clause (*c*) of rule 2 of the said rules, *substitute* the following, namely :—

"The maundage on which the amount of toll is calculated shall be reckoned to the nearest integral multiple of 12½ maunds, any remainder of less than 12½ maunds being rejected In the case of boats exceeding 500 maunds by measurement, the maundage shall be reckoned to the nearest integral multiple of 50 maunds rejecting any remainder of less than 50 maunds."

2. In rule 7 of the said rules for the words "one rupee" *substitute* the words "two rupees per ticket."

3. In rule 8 of the said rules—

(*i*) for the words and figures "eight annas per 100 maunds" *substitute* the words and figures "one rupee per 100 maunds."

(*ii*) for the words "one anna per timber per day" *substitute* the words "two annas per timber per day."

(*iii*) for the words and figures "two annas per 100 per day" *substitute* the words and figures "four annas per 100 per day."

(*iv*) for the words and figures "eight annas per 100 per day" *substitute* the words and figures "one rupee per 100 per day."

4. In rule 12 of the said rules for the words and figures "four annas per 100 maunds" *substitute* the words and figures "eight annas per 100 maunds."

5. For the schedules of rates of tolls to be charged on the Midnapore Canal and on the Naraingar Distributary, mentioned at the end of the said rules, *substitute* the following, namely :—

**Schedule of rates of tolls to be charged on the Midnapore Canal and the Naraingar Distributary.**

*Entering from both the East and West.*

| Description | Range I, 7 miles, Uluberia to Bansberia | Range II, 8 miles, Bansberia to Kantapukur | Range III., 11 miles, Dalnan to Panskura | Range IV, 11 miles, Panskura to Bali chak | Range V, 13 miles, Balichak to Mohanpur | Range V, 9 miles, Balichak to Kristnagar. | Range V, 4 miles, Kristnagar to Mohanpore | Naraingar Distributary Entering distributary from canal or *vice versa* |
|---|---|---|---|---|---|---|---|---|
| | Rs A | Rs A | Rs. A | Rs. A | Rs A. | Rs A. P. | Rs A P | Rs. A |
| Loaded vessels per hundred maunds. | 0 8 | 0 4 | 0 12 | 0 12 | 0 14 | 0 10 0 | 0 4 0 | 0 12 |
| Empty vessels per hundred maunds | 0 4 | 0 2 | 0 6 | 0 6 | 0 7 | 0 5 0 | 0 2 0 | 0 6 |
| Timber in rafts or loose per timber. | 0 2 | 0 2 | 0 2 | 0 2 | 0 2 | 0 1 6 | 0 0 6 | 0 2 |
| Piles in rafts or loose per hundred piles | 1 0 | 1 0 | 1 0 | 1 0 | 1 0 | 0 12 0 | 0 4 0 | 1 0 |
| Bamboos in floats per hundred | 0 4 | 0 4 | 0 4 | 0 4 | 0 4 | 0 3 0 | 0 1 0 | 0 4 |

NOTE.—Vessels which enter the canal at Kantapukur lock and do not proceed beyond 900 feet from that lock will be charged toll at the rate of two annas per 100 maunds, whether loaded or empty Tolls will be realized at Uluberia, Bansberia, Kantapukur, Dalnan, Panskura, Balichak and Kristnagar toll stations

*No. 31.—The 19th June 1923.*—The following draft of amendments, which, in exercise of the powers conferred by sections 6 and 11 of the Canals Act, 1864 (Bengal Act V of 1864), the Governor in Council intends to make in the revised rules and revised schedules of rates of tolls (published in Bengal Government notification No 8, dated the 25th May 1915, in Part I of the *Calcutta Gazette* of the 26th *idem*) for the High Tidal Canal and the portion of the Orissa Coast Canal lying in Bengal, is hereby published for the information of persons likely to be affected thereby

II. The draft will be taken into consideration on or after the 5th August 1923, and any objections or suggestions received by the undersigned before that date will be considered —

*Draft amendments.*

1. For clause (*c*) of rule 2 of the said rules, *substitute* the following, namely .—

"The maundage on which the amount of toll is calculated shall be reckoned to the nearest integral multiple of 12½ maunds, any remainder of less than 12½ maunds being rejected. In the case of boats exceeding 500 maunds by measurement, the maundage shall be reckoned to the nearest integral multiple of 50 maunds, rejecting any remainder of less than 50 maunds".

2. In rule 7 of the said rules for the words "one rupee" *substitute* the words "one rupee and eight annas per ticket".

3. In rule 8 of the said rules—

(*i*) for the words and figures "8 annas per 100 maunds" *substitute* the words and figures "12 annas per 100 maunds".

(*ii*) for the words "one anna per timber per day" *substitute* the words "one anna and six pies per timber per day."

(*iii*) for the words and figures "Two annas per 100 per day" *substitute* the words and figures "Three annas per 100 per day."

(*iv*) for the words and figures "Eight annas per 100 per day" *substitute* the words and figures "Twelve annas per 100 per day."

4. In rule 12 of the said rules for the words and figures "four annas per 100 maunds" *substitute* the words and figures "eight annas per 100 maunds".

5. For the three schedules of rates of tolls mentioned at the end of the said rules, *substitute* the following, namely :—

**Schedule of rates of tolls for local traffic to be charged on the Hijili Tidal Canal and the portion of the Orissa Coast Canal, Range III, lying within Bengal.**

| Description | Hijili Tidal Canal. | | Orissa Coast Canal. | | | |
|---|---|---|---|---|---|---|
| | Gewankhali lock to Rtamagra and *vice versa* | Terapakia lock to Kalinagar lock and *vice versa*. | Bhaltagar lock to Mosagaon and *vice-versa*. | Mosagaon to Contai and *vice versa*. | Mosagaon to Pichaboni and *vice versa* | Pichaboni to Mirgoda and *vice versa*. |
| | Range I | Range II | | Range III | | |
| | 11 miles | 18 miles. | 9 miles | 7 miles. | 7 miles. | 11 miles. |
| | Rs A | Rs A | Rs. A. | Rs A | Rs. A | Rs. A. |
| Vessels loaded per 100 maunds | 1 0 | 1 12 | 0 10 | 0 8 | 0 8 | 0 12 |
| Vessels empty per 100 maunds | 0 8 | 0 14 | 0 5 | 0 4 | 0 4 | 0 6 |
| Timber in rafts or loose per timber | 0 2 | 0 3 | 0 2 | 0 2 | 0 2 | 0 2 |
| Bamboos in floats or loose per 100 bamboos. | 0 4 | 0 6 | 0 4 | 0 4 | 0 4 | 0 4 |

NOTE.—Tolls will be charged at Gewankhali, Rtamagra, Terapakia and Kalinagar on the Hijili Tidal Canal and at Bhaltgar, Mosagaon and Pichaboni toll stations on the Orissa Coast Canal

**Schedule of rates of tolls for through traffic to be charged on the Hijili Tidal Canal and the portion of the Orissa Coast Canal, Range III, lying within Bengal.**

| From— | To— | Loaded vessels per 100 maunds | | | Empty vessels per 100 maunds. | | |
|---|---|---|---|---|---|---|---|
| | | Hijili Tidal Canal. | Orissa Coast Canal | Total | Hijili Tidal Canal. | Orissa Coast Canal. | Total. |
| | | Rs A | Rs A | Rs A | Rs A | Rs. A | Rs. A |
| Gewankhali .. | Kalinagar and *vice versa* ... | 2 8 | ... | 2 8 | 1 4 | ... | 1 4 |
| Ditto .. | Mosagaon and *vice versa* ... | 2 8 | 0 8 | 3 0 | 1 4 | 0 4 | 1 8 |
| Ditto .. | Pichaboni and *vice versa*... | 2 8 | 1 0 | 3 8 | 1 4 | 0 8 | 1 12 |
| Ditto ... | Mirgoda and *vice versa* ... | 2 8 | 1 10 | 4 2 | 1 4 | 1 2 | 2 6 |
| Ditto ... | Contai and *vice versa* ... | 2 8 | 1 0 | 3 8 | 1 4 | 0 8 | 1 12 |
| Ditto ... | Baliaghye or Karikapatna and *vice versa* | 2 8 | 0 12 | 3 4 | 1 4 | 0 6 | 1 10 |

NOTE—Tolls will be charged at Gewankhali, Rtamagra, Terapakia and Kalinagar on the Hijili Tidal Canal and Bhaltgar, Surpal, Mosagaon and Pichaboni toll stations on the Orissa Coast Canal.

**Schedule of rates of tolls for local traffic to be charged on the Pass khals and Baliaghye drain.**

| Description. | Terapakia Pass khal from Terapakia lock to Banteria and *vice versa*. | Palaboni Pass khal from its junction with Terapakia khal at Anandapur to its junction with the Sadar khal and *vice versa*. | Baliaghye drain from Surpal to Karikapatna and Baliaghye and *vice versa*. |
|---|---|---|---|
| | 10 miles | 10 miles | 11 miles |
| | Rs A | Rs. A | Rs A. |
| Loaded vessels per 100 maunds ... | 1 0 | 1 0 | 1 0 |
| Empty vessels per 100 maunds ... | 0 8 | 0 8 | 0 8 |
| Timbers in rafts or loose per timber ... | 0 2 | 0 2 | 0 2 |
| Bamboos in floats or loose per 100 bamboos. | 0 4 | 0 4 | 0 4 |

NOTE—Tolls will be charged at Terapakia and Surpal.

G. T. HUNTINGFORD,
*Secretary to the Government of Bengal (offg.).*

## DEPARTMENT OF AGRICULTURE AND INDUSTRIES.

### INDUSTRIES.

NOTIFICATIONS.

**Minister in charge : The Hon'ble Nawab Saiyid Nawab Ali Chaudhuri, Khan Bahadur, C.I.E.**

**Calcutta.**

*No. 2699Ind.—The 20th July 1923.*—Mr. B. M Das, Superintendent, Calcutta Research Tannery, is allowed leave on leave salary equivalent to full pay for one month under Government ruling 2 on article 103 (*a*) of the Fundamental Rules, with effect from the 17th July 1923, or any subsequent date on which he may avail himself of it.

J. T DONOVAN,

*Secretary to the Government of Bengal (offg.).*

### VETERINARY.

**Minister in charge : The Hon'ble Nawab Saiyid Nawab Ali Chaudhuri, Khan Bahadur, C.I.E.**

**Dacca.**

*No. 2697Vety.—The 20th July 1923.*—Babu Nripendra Nath Mazumdar, Deputy Superintendent, Civil Veterinary Department, Dacca, is allowed leave for fifteen days, viz., leave on average pay for two days with effect from the 4th July 1923, and leave on half average pay for the remaining period under rules 81 (*b*) (*ii*) and 81 (*d*) of the Fundamental Rules, in extension of the leave granted to him under the orders of the 21st June 1923

J T. DONOVAN,

*Secretary to the Government of Bengal (offg.).*

### EXCISE.

**Minister in charge : The Hon'ble Nawab Saiyid Nawab Ali Chaudhuri, Khan Bahadur, C.I.E.**

**Burdwan.**

*No 2617.—The 17th July 1923.*—Mr. M A Peychers, Superintendent of Excise and Salt, is, on expiry of his leave, posted to Burdwan.

**Minister in charge : The Hon'ble Nawab Saiyid Nawab Ali Chaudhuri, Khan Bahadur, C.I.E.**

**Burdwan. Mymensingh.**

*No. 2618.—The 17th July 1923.*—Maulvi Sultan Muhammad, Superintendent of Excise and Salt, Burdwan, is transferred to Mymensingh.

**Minister in charge : The Hon'ble Nawab Saiyid Nawab Ali Chaudhuri, Khan Bahadur, C.I.E.**

**Birbhum. Bogra.**

*No. 2619.—The 17th July 1923.*—Mr G D. Hoskins, Superintendent of Excise and Salt, Birbhum, is transferred to Bogra.

**Minister in charge : The Hon'ble Nawab Saiyid Nawab Ali Chaudhuri, Khan Bahadur, C.I.E.**

**Jessore. Birbhum.**

*No. 2620.—The 17th July 1923.*—Maulvi Muhammad Golam Kadir, probationary Superintendent of Excise and Salt, Jessore, is transferred to Birbhum, and is placed temporarily in charge of the district.

**Minister in charge : The Hon'ble Nawab Saiyid Nawab Ali Chaudhuri, Khan Bahadur, C.I.E.**

**Mymensingh. Dacca.**

*No. 2621.—The 17th July 1923.*—Maulvi Mabinuddin Ahmad, Superintendent of Excise and Salt, Mymensingh, is transferred to Dacca.

**Minister in charge : The Hon'ble Nawab Saiyid Nawab Ali Chaudhuri, Khan Bahadur, C.I.E.**

**Dacca. Bakarganj.**

*No. 2622.—The 17th July 1923.*—Rai Lalit Mohan Sen Bahadur, Superintendent of Excise and Salt, Dacca, is transferred to Bakarganj.

**Minister in charge : The Hon'ble Nawab Saiyid Nawab Ali Chaudhuri, Khan Bahadur, C.I.E.**

**Bakarganj. Jessore.**

*No. 2623.—The 17th July 1923.*—Mr. J. P. Deefholts, Superintendent of Excise and Salt, Bakarganj, is transferred to Jessore.

J. T. DONOVAN,

*Secretary to the Government of Bengal (offg.).*

### Orders by the Director of Agriculture, Bengal.

*No. 9134Agri.—The 17th July 1923.*—Babu Amrita Lal Shome, District Agricultural Officer, is granted leave on average salary for one week under rule 81 (*b*) (*ii*) of the Fundamental Rules, in extension of the leave sanctioned in this office notification No. 8441, dated the 26th June 1923.

R. S. FINLOW,
*Director of Agriculture, Bengal (offg.).*

### Orders by the Registrar of Co-operative Societies, Bengal.

*No. 11391.—The 19th July 1923.*—Whereas I am of opinion, as the result of an enquiry held into the constitution, working and financial condition of the Jalpaiguri Central Co-operative Store, Limited (registered No. 76 of 1919), in the district of Jalpaiguri, under sub-section (*1*) of section 35 of the Co-operative Societies Act, II of 1912, that the society ought to be dissolved.

Now, therefore, in exercise of the power conferred by sub-section (*1*) of section 39 of the same Act, I hereby cancel the registration of the said society.

And further, in exercise of the power conferred by sub-section (*1*) of section 42 of the same Act, I hereby appoint the Inspector of Co-operative Societies, Jalpaiguri, to be liquidator of the said society.

*No. 11584.—The 21st July 1923.*—In supersession of the notification No 1028, dated the 19th January 1922, so far as it relates to the appointment of the Inspector of Co-operative Societies, Khepupara, as liquidator of the Birpasha Joutha Gramya Bank (Bakarganj), I appoint the Inspector of Co-operative Societies, Patuakhali, as liquidator of the said society.

*No. 11585.—The 21st July 1923.*—In supersession of the notification No. 11627, dated the 1st September 1922, so far as it relates to the appointment of the Inspector of Co-operative Societies, Khepupara, as liquidator of the Rampur Co-operative Bank (Bakarganj), I appoint the Inspector of Co-operative Societies, Patuakhali, as liquidator of the said society.

J. M. MITRA,
*Registrar of Co-operative Societies, Bengal.*

### Orders by the Commissioner of Excise and Salt, Bengal.

*No. 10Exc.—The 19th July 1923.*—Babu Karuna Mohan Ghosh, officiating Inspector of Excise and Salt, Calcutta, is allowed leave on full average pay for fourteen days, with effect from the 16th to the 29th June 1923 (both days inclusive).

S. C. MUKERJEE,
*Commissioner of Excise and Salt, Bengal*

## REVENUE DEPARTMENT.

### LAND REVENUE.

### NOTIFICATIONS.

*No 5350L.R.—The 17th July 1923.*—It is hereby notified that the revenue survey of the lands falling within the district of Midnapore which are situated on the banks and in the beds of the rivers that flow through or along the boundaries of the said district, and of the lands on the shores of that part of the Bay of Bengal which adjoins that district, directed to be made by the notification No. 1899L.R., dated the 6th July 1911, as amended by notification No. 1749T.R., dated the 16th October 1916, has been completed and has been approved by Government on this date.

Midnapore.

*No. 5489L.R.—The 19th July 1923.*—Babu Mathura Nath Banarji, Deputy Magistrate and Deputy Collector, on leave, is appointed to be Deputy Collector of Land Revenue, Calcutta, and also to be Collector of Stamp Revenue, Calcutta, under section 2, sub-section (*9*) (*b*) of the Stamp Act, 1899 (II of 1899).

**Calcutta.**

*No. 5553L.R.—The 21st July 1923.*—Babu Amulya Kumar Guha, Sub-Deputy Collector and Assistant Settlement Officer, Bankura and Burdwan, is vested with the powers of a Collector under—

**Bankura. Burdwan.**

(1) the Bengal Land Revenue Settlement Regulation, 1822 (VII of 1822),
(2) the Bengal Land Revenue Settlement Regulation, 1825 (IX of 1825),
(3) the Bengal Land Revenue Assessment (Resumed Lands) Regulation, 1828 (III of 1828), and
(4) the Bengal Land Revenue (Settlement and Deputy Collectors) Regulation, 1833 (IX of 1833),

to be exercised in the district of Bankura and in the area comprised in the Asansol subdivision of the district of Burdwan.

He is also vested with the powers of a Settlement Officer under Chapter VI, Part I of the rules under the Bengal Tenancy Act in the district of Bankura and in the area comprised in the Asansol subdivision of the district of Burdwan.

M. C. MCALPIN,
*Secretary to the Government of Bengal.*

---

**LAND ACQUISITION.**

*No. 5525L.A.—The 21st July 1923.*—In exercise of the powers conferred by section 48 (*1*) of the Land Acquisition Act, I of 1894, the Governor in Council is pleased to withdraw from the acquisition of a piece of land being premises Nos. 45-1, 45-1-1, 45-3, 45-2, 45-4 and 45-5, Diamond Harbour Road and a portion of premises No. 45-3-1, Diamond Harbour Road, measuring, more or less, 5 bighas 17 cottahs 1 chitak and 41 square feet of standard measurement, equivalent to 1·9356 acres, and bounded as described below, which was included in the area notified for acquisition under declaration No. 665L.A., dated the 20th January 1920, published at page 66, Part I of the *Calcutta Gazette* of the 21st idem, and required for the construction of Armed Police barracks at the junction of Diamond Harbour Road and Mominpore Lane in Ward No. XXIV of the Calcutta Municipality —

**Calcutta. 24-Parganas.**

*Boundaries*

*North*—By Mominpore Lane.
*East*—By a portion of premises No. 45-3-1, Diamond Harbour Road and Diamond Harbour Road.
*South*—By premises No. 43, Diamond Harbour Road, already acquired under declaration No. 665L.A., dated the 20th January 1920, and premises No. 33, Mominpore Lane.
*West*—By premises No. 33, Mominpore Lane.

*No. 5529L.A.—The 21st July 1923.*—In exercise of the power conferred by section 48 (*1*) of the Land Acquisition Act I of 1894, the Governor in Council is pleased to withdraw from the acquisition of a piece of land measuring, more or less, ·0028 of an acre notified for acquisition under declaration No. 4559L.A., dated 24th April 1922, published at page 822, Part I of the *Calcutta Gazette* of the 26th idem, and required for widening Amligola road in the town of Dacca, in the mahalla of Amligola, parganas Ibrahimpur, Idgah and Makimabad, zilla Dacca.

**Dacca.**

*No. 5544L.A.—The 21st July 1923.*—Whereas it appears to the Governor in Council that lands in villages Konnagar, Hatirkul, Rishra, Mahesh, Ballabpore and Serampur, pargana Boro, district Hooghly, are likely to be needed for a public purpose, viz., for a railway siding to the Bengal Luxmi Cotton Mills, in the area bounded by the river Hooghly on the east, by the main line of the East Indian Railway on the west, by a line drawn east and west through Serampore station on the north and by a line drawn east and west through the Konnagar station on the south, notice is hereby given to all whom it may concern that, in exercise of the powers conferred by section 4 of the Land Acquisition Act, I of 1894, the Governor in Council has authorized the Engineers of the East Indian Railway Company for the time being engaged on this undertaking, with their servants and workmen, to enter upon and survey the land, and do all other acts required for the proper execution of their work as provided for or specified in the said section.

**Hooghly.**

The general route to be taken for the survey will be either from the Rishra or Serampore station side of the East Indian Railway and will terminate at the Bengal Luxmi Cotton Mills on the bank of the river Hooghly.

M. C. MCALPIN,
*Secretary to the Government of Bengal.*

## DECLARATION.

*No. 5318L.A.—The 14th July 1923.*—Whereas it appears to the Governor in Council that land is required to be taken by Government at the public expense for a public purpose, viz., for the Magura Subdivisional Officer's court compound including Guru Training School, Sub-Jail compound including tank and dispensary, Subdivisional Officer's residence with a record-room, in the village of Magura, pargana Mahamudshahi, zilla Jessore, it is hereby declared that for the above purpose four plots of land altogether measuring, more or less, 8·31 acres, bounded on the—

**Jessore.**

PLOT I :

*North*—By the river Nabaganga and a foot-path (settlement plots Nos. 5895 and 4506 respectively),
*East*—By the public path (settlement plot No. 4 06),
*South*—By the Magura pucca road (settlement plot No. 4479),
*West*—By the public path (settlement plot No. 4494),

PLOT II :

*North*—By the river Nabaganga (settlement plot No. 5895),
*East*—By the public path (settlement plot No 4494),
*South*—By the road (settlement plot No. 4480),
*West*—By the public path and settlement plots Nos. 4186, 5939, 4485, 4488 and 4489,

PLOT III :

*North*—By the foot-path (settlement plot No. 608),
*East*—By the public path (settlement plot No. 608),
*South and West*—By the settlement plot No. 618,

PLOT IV :

*North*—By the public path (settlement plot No. 608),
*East*—By the public path (settlement plot No 617),
*South*—By the public path (settlement plot No 621),
*West*—By the settlement plots Nos. 615, 614 and 611,

are required within the aforesaid village of Magura.

This declaration is made, under the provisions of section 6 of Act I of 1894, to all whom it may concern.

A plan of the land may be inspected in the office of the Subdivisional Officer of Magura.

M. C. MCALPIN,
*Secretary to the Government of Bengal.*

---

## DECLARATION.

*No. 5321L.A.—The 14th July 1923.*—Whereas it appears to the Governor in Council that land is required to be taken by Government at the expense of the Corporation of Calcutta for a public purpose, viz., for rounding off the corners at the junction of Debendra Ghosh Road and Chaulpati Lane in Ward No. XXII of the Calcutta Municipality in the town of Calcutta, it is hereby declared that for the above purpose two pieces of land, being portions of premises Nos. 18, Chaulpati Lane and 19, Debendra Ghosh Road, measuring, more or less, 6 chitaks and 10 square feet of standard measurement, equivalent to ·0063 of an acre, bounded as below :—

**Calcutta.**

PLOT A :

*North*—By Debendra Ghosh Road,
*East*—By Chaulpati Lane,
*South and West*—By the remaining portion of premises No. 18, Chaulpati Lane,

PLOT B :

*North*—By Debendra Ghosh Road,
*East and South*—By the remaining portion of premises No. 19, Debendra Ghosh Road,
*West*—By Chaulpati Lane,

are required within the aforesaid Ward No. XXII in the town of Calcutta.

This declaration is made, under the provisions of section 6 of Act I of 1894, to all whom it may concern.

A plan of the land may be inspected in the office of the First Land Acquisition Collector, at No. 2, Commercial Buildings, Calcutta.

M. C. MCALPIN,
*Secretary to the Government of Bengal.*

## DECLARATION.

*No. 5324L A.—The 14th July 1923.*—Whereas it appears to the Governor in Council that land is required to be taken by Government at the expense of the District Board of Burdwan for a public purpose, viz., for the re-excavation of Baligaria tank in the village of Maina, pargana Chutipur, zilla Burdwan, it is hereby declared that for the above purpose a piece of land measuring, more or less, 3 bighas 9 cottahs 13 chitaks of standard measurement, equivalent to 1 15 acres, bounded on the—

**Burdwan.**

*North*—By the paddy land of Jogindranath Purkait, paddy lands of Bhutnath Bhuina and the paddy land of Dasarathi Ghosh,

*East*—By the paddy land of Nanilal Purkait, paddy land of Kartik Chandra Pal, paddy land of Khudiram Ghosh and the paddy land of Golap Dasi,

*South*—By the paddy land of Bholanath Ghosh, paddy land of Sarat Chandra Ghosh and the paddy land of Sagar Chandra Ghosh, the paddy land of Kunja Behari Ghosh and the paddy land of Nanilal Purkait,

*West*—By the paddy lands of Dasarathi Ghosh, paddy land of Bhadreshwar Ghosh and the paddy land of Syed Muhammad Mamud,

is required within the aforesaid village of Maina

This declaration is made, under the provisions of section 6 of Act I of 1894, to all whom it may concern.

A plan of the land may be inspected in the office of the Collector of Burdwan

M. C. MCALPIN,
*Secretary to the Government of Bengal.*

## DECLARATION

*No. 5380L.A.- The 17th July 1923*—Whereas it appears to the Governor in Council that land is required to be taken by Government at the public expense for a public purpose, viz, for the construction of a ring bund at Nabasan in mile 202 of 24-Parganas embankment, in the village of Nabasan *alias* Hetamgar, pargana Medan Mollah, zilla 24-Parganas, it is hereby declared that for the above purpose a piece of land measuring, more or less, 6 bighas 18 cottahs 13 chitaks of standard measurement, equivalent to 2 2944 acres, bounded on the—

**24-Parganas.**

*North*—By the lands of Jogendra Nath Nag and Rama Nath Sardar and by the Government embankment land,

*East*—By the Government embankment land and land of Jogendra Nath Nag,

*South*—By the land proposed to be acquired for retired line and land of Jogendra Nath Nag,

*West*—By the lands of Jogendra Nath Nag and Rama Nath Sardar and land proposed to be acquired for retired line,

is required within the aforesaid village of Nabasan *alias* Hetamgar

This declaration is made, under the provisions of section 6 of Act I of 1894, to all whom it may concern

A plan of the land may be inspected in the office of the Executive Engineer, Canals Division.

M. C. MCALPIN,
*Secretary to the Government of Bengal.*

## DECLARATION.

*No 5493 L A —The 19th July 1923.*—Whereas it appears to the Governor in Council that an additional piece of land is required to be taken by Government at the expense of the Serampore Municipality for a public purpose, viz, for widening Baroda Prosad Dey Street, in the village of Serampore, pargana Boro, zilla Hooghly, it is hereby declared that for the above purpose a piece of land measuring, more or less, 4 chitaks and 9·37 square feet of standard measurement, equivalent to ·004 of an acre, bounded on the—

**Hooghly.**

*North, East and West*—By wall of Babu Dwijendra Nath Bhattacharji,

*South*—By Baroda Prosad Dey Street,

is required within the aforesaid village of Serampore.

This declaration is made, under the provisions of section 6 of Act I of 1894, to all whom it may concern.

A plan of the land may be inspected in the office of the Collector of Hooghly.

M. C. MCALPIN,
*Secretary to the Government of Bengal.*

## DECLARATION.

*No 5532L.A.—The 21st July 1923*—Whereas it appears to the Governor in Council that land is required to be taken by Government at the expense of the Corporation of Calcutta for a public purpose, viz., for widening a portion of Deb Lane in the village of Entally, pargana Dihi Panchannagram, zilla 24-Parganas, it is hereby declared that for the above purpose a piece of land measuring, more or less, 6 cottahs and 6 chitaks of standard measurement equivalent to ·1053 of an acre bounded on the—

24-Parganas.

*North*—By Deb lane,

*East and South*—By remaining portion of premises Nos. 52 and 52-1, South Road, Entally,

*West*—By South Road, Entally,

is required within the aforesaid village of Entally

This declaration is made, under the provisions of section 6 of Act I of 1894, to all whom it may concern.

A plan of the land may be inspected in the office of the Land Acquisition Collector at No 2, Commercial Buildings, Calcutta

M C MCALPIN,
*Secretary to the Government of Bengal.*

---

## DECLARATION.

*No 5535L.A.—The 21st July 1923*—Whereas it appears to the Governor in Council that land is required to be taken by Government at the public expense for a public purpose, viz, for the extension of the charitable dispensary at Baliati, in the village of Baliati, pargana Durgapur, zilla Dacca, it is hereby declared that for the above purpose a piece of land measuring, more or less, 1 53 acres, bounded on the—

Dacca.

*North*—By settlement plot No 934,

*East and South*—By settlement plot No. 930,

*West*—By settlement plot No. 963,

is required within the aforesaid village of Baliati.

This declaration is made, under the provisions of section 6 of Act I of 1894, to all whom it may concern.

A plan of the land may be inspected in the office of the Collector of Dacca.

M. C. MCALPIN,
*Secretary to the Government of Bengal.*

---

## DECLARATION.

*No 5538L.A.—The 21st July 1923.*—Whereas it appears to the Governor in Council that land is required to be taken by Government at the expense of the Tangail Municipality for a public purpose, viz, for the excavation of a khal in the villages of Akurtakur and Dhul, pargana Kagmari, zilla Mymensingh, it is hereby declared that for the above purpose a piece of land measuring, more or less, 7 cottahs and 4 chitaks of standard measurement, equivalent to 0·12 of an acre, bounded on the—

Mymensingh.

*North*—By the settlement plots Nos. 321 and 323 of Akurtakur and No. 163 of Dhul,

*East*—By the settlement plot No. 164 of Dhul,

*South*—By the settlement plots Nos. 318 and 171 of Akurtakur,

*West*—By the settlement plot No. 277 of Akurtakur,

is required within the aforesaid villages of Akurtakur and Dhul.

This declaration is made, under the provisions of section 6 of Act I of 1894, to all whom it may concern.

A plan of the land may be inspected in the office of the Collector of Mymensingh.

M. C. MCALPIN,
*Secretary to the Government of Bengal.*

## DECLARATION.

*No 5541L.A.—The 21st July 1923.*—Whereas it appears to the Governor in Council that land is required to be taken by Government at the expense of the District Board of Bakarganj for a public purpose, viz, for a tank at Bhawanipur in police-station Pirojpur in the village of Bhawanipur, pargana Selimabad, zilla Bakarganj, it is hereby declared that for the above purpose a piece of land measuring, more or less, 1·14 acres, bounded on the—

**Bakarganj.**

*North*—By remaining portion of plot No 441,

*East*—By remaining portions of plots Nos. 441, 450, 451 and plot No 984 of Indurkani village,

*South*—By plots Nos 447 and 448,

*West*—By the remaining portions of plots Nos 442, 443 and plot No. 433,

is required within the aforesaid village of Bhawanipur

This declaration is made, under the provisions of section 6 of Act I of 1894, to all whom it may concern.

A plan of the land may be inspected in the office of the Subdivisional Officer of Pirojpur.

M C MCALPIN,
*Secretary to the Government of Bengal.*

---

## DECLARATION.

*No 5550L A —The 21st July 1923* —Whereas it appears to the Governor in Council that a plot of land with a pucca two storied building thereon, on the north-west corner of the new police line at Khulna, is required to be taken by Government at the public expense for a public purpose, viz, for the quarters of the Sub-Assistant Surgeon, in the village of Toothpara, pargana Hogla, zilla Khulna, it is hereby declared that for the above purpose a piece of land measuring, more or less, ·11 of an acre, bounded on the—

**Khulna.**

*North*—By drain appertaining to Jessore Road,

*East and South*—By new police line,

*West*—By a blind lane,

is required within the aforesaid village of Toothpara.

This declaration is made, under the provisions of section 6 of Act I of 1894, to all whom it may concern

A plan of the land may be inspected in the office of the Collector of Khulna

M. C. MCALPIN,
*Secretary to the Government of Bengal.*

---

## DECLARATION.

*No 5559L.A —The 23rd July 1923.*—Whereas it appears to the Governor in Council that land is required to be taken by Government at the expense of the Corporation of Calcutta for a public purpose, viz., for rounding off the corner at the junction of Turner Street and Marsden Street in ward No. XIV of the Calcutta Municipality, in the town of Calcutta, it is hereby declared that for the above purpose a piece of land being a portion of premises No 6, Marsden Street measuring, more or less, 1 chitak of standard measurement, equivalent to ·001 of an acre, bounded on the—

**Calcutta.**

*North*—By Turner Street,

*East*—By Marsden Street,

*South and West*—By the remaining portion of premises No 6, Marsden Street,

is required within the aforesaid ward No. XIV of the Calcutta Municipality, in the town of Calcutta.

This declaration is made, under the provisions of section 6 of Act I of 1894, to all whom it may concern.

A plan of the land may be inspected in the office of the First Land Acquisition Collector, at 2, Commercial Buildings, Calcutta.

M. C. MCALPIN,
*Secretary to the Government of Bengal.*

## Orders by the Conservator of Forests, Bengal.

*No. 20For.—The 30th June 1923.*—Mr J. C. M. Gardner, Deputy Conservator of Forests, attached to the Darjeeling division, is posted to the charge of the Senchal Range of that division with headquarters at Jore-bungalow with effect from the 21st June 1923

Darjeeling.

E. O SHEBBEARE,
*Conservator of Forests, Bengal (offg.).*

## Orders by the Controller of Currency.

IN continuation of this office notification, dated the 20th June 1923, it is notified that the rate at which contributions to the Indian Civil Service and Indian Military Service Family Pension Funds and the Indian Military Widows' and Orphans' Funds are recoverable during the month of August 1923 is 1s. 4d the rupee. *This rate also applies to the payment of leave salaries, pensions, and annuities fixed in sterling*

2 The percentage admissible as Exchange Compensation Allowance on salary paid during the same month is Rs. 6-4-0 per Rs. 100 The allowance is subject to the maximum of Rs. 138-14 0

H. DENNING,
*Controller of the Currency (offg.)*

THE TREASURY, *Calcutta, the 20th July 1923.*

## SHERIFF'S OFFICE, THE 11TH JULY 1923.

NOTICE is hereby given that the Fourth Criminal Sessions of the year 1923 of the High Court of Judicature at Fort William in Bengal, for the town of Calcutta and Factory of Fort William, and the places subordinate thereto, will be held at the Court House, in the town of Calcutta, on Monday, the 30th day of July instant, at 11 o'clock in the forenoon, and thenceforward from day to day until the said sessions be over. And it is hereby proclaimed that all persons who are to prosecute any of the prisoners to be brought up for trial at the said sessions be present then and there to prosecute.

M M ALI NAKEY, *Sheriff*

সরিফ-আফিস সন ১৯২৩ সাল তারিখ ১১ই জুলাই।

সকলকে সমাচার দেওয়া যাইতেছে যে সুবে বাঙ্গালার ফোর্ট উইলিয়ম দুর্গের অধীন সহর কলিকাতার ও অন্যান্য স্থানের ফৌজদারী বিচার নিষ্পত্তি জন্য আগামী সন ১৯২৩ সালের ৩০শে জুলাই সোমবার বেলা ১১ ঘটিকার সময় এবং যে পর্য্যন্ত সেশিয়ানের কার্য্য শেষ না হয় প্রতিদিন উক্ত সময়ে কলিকাতার হাইকোর্টের আপন আদালত ঘরে সন ১৯২৩ সালের চতুর্থ ক্রিমিনেল সেশিয়ান বসিবেক এবং এতদ্দ্বারা প্রচার করা যাইতেছে যে যে সকল ব্যক্তি কোন কয়েদির বিরুদ্ধে ফৌজদারী মিছিল করিবেক তাহারা উক্ত স্থানে উক্ত সময়ে হাজির থাকিয়া মোকদ্দমা করে, ইতি।—

এম, এম, আলি নকি,
সরিফ।

## ORDERS BY COMMISSIONERS OF DIVISIONS.

### NOTIFICATION.

*No. 201R.G.*—Babu Jitendriya Mukherji, Sub-Deputy Collector and Chaukidari Circle Officer at the Kushtia subdivision of the district of Nadia, is allowed leave on average pay for four weeks with effect from the 3rd July 1923.

J. H. LINDSAY, *Commissioner (offg.).*

COMMR.'S OFFICE, PRESY. DIVN., CALCUTTA, *the 12th July 1923.*

NOTIFICATION.

*No. 2376J G.*—Maulvi Abul Fazl Muhammad Mahmud, Sub-Deputy Collector, Vishnupur subdivision, in the district of Bankura, is transferred to Contai, in the district of Midnapore.

J. N. GUPTA, *Commissioner.*

COMMR.'S OFFICE, BURDWAN DIVN., CHINSURA, *the 15th July 1923*

NOTIFICATION

*No 2379J.G*—Maulvi Saleh Abdur Rahim, probationary Sub-Deputy Magistrate, Hooghly Sadar, is transferred to Vishnupur in the district of Bankura.

J. N GUPTA, *Commissioner*

COMMR.'S OFFICE, BURDWAN DIVN., CHINSURA, *the 15th July 1923*

NOTIFICATION.

*No 2390J.G*—Babu Dhirjati Kumar Datta, Sub-Deputy Magistrate, Howrah Sadar, is temporarily transferred to Uluberia subdivision in that district.

J. N GUPTA, *Commissioner.*

COMMR'S OFFICE, BURDWAN DIVN, CHINSURA, *the 16th July 1923*

NOTIFICATION

*No 3283J*—Maulvi Abu Huda Sayedullah, Sub-Deputy Collector, on probation, Mymensingh, Sadar, is transferred to the Netrokona subdivision of that district as Circle Officer under the Bengal Village Self-Government Act, V of 1919.

A. N. MOBERLY, *Commissioner (offg).*

COMMR.'S OFFICE, DACCA DIVN, DACCA, *the 17th July 1923*

NOTIFICATION

*No 3291J*—Babu Badanya Kumar Roy, Sub-Deputy Collector, Patuakhali, in the district of Bakarganj, is transferred to the headquarters station of that district

A. N MOBERLY, *Commissioner (offg.)*

COMMR.'S OFFICE, DACCA DIVN, DACCA, *the 18th July 1923*

NOTIFICATION

*No 2438J G*—In supersession of this office notification No 2379J G., dated the 15th July 1923, Maulvi Saleh Abdur Rahim, Probationary Sub-Deputy Magistrate, Hooghly, is temporarily transferred to Contai in the district of Midnapore.

J. N. GUPTA, *Commissioner*

COMMR.'S OFFICE, BURDWAN DIVN, CHINSURA, *the 19th July 1923.*

NOTIFICATION.

*No. 2450J G.*—This office notification No 1975J G, dated the 11th June 1923, transferring Babu Upendra Nath Ghattak, Probationary Sub-Deputy Collector and Circle Officer of Sonamukhi Circle, in the district of Bankura, temporarily on general duty to the Sadar station of that district, is hereby cancelled.

J. N. GUPTA, *Commissioner.*

COMMR.'S OFFICE, BURDWAN DIVN., CHINSURA, *the 20th July 1923.*

## NOTIFICATION.

*No. 3217J.*—It is hereby notified for general information that under rule 63 (*2*) of the Bengal Jail Code, 1919, the following gentlemen are appointed to be non-official visitors of the Bhola sub-jail in the district of Bakarganj, for a period of two years, with effect from the date of this notification :—

1. Babu Mahendra Chandra Roy Chaudhury.
2. Khan Sahib Maulvi Efazuddin Ahmed.

A. N. MOBERLY, *Commissioner* (*offg.*).

COMMR.'S OFFICE, DACCA DIVN., DACCA, *the 14th July 1923*

## CORRIGENDUM.

*No. 2290M.*—In this office notification No. 2189M, dated the 5th July 1923, fixing the date for holding a by-election for the election of a Commissioner of the Kurseong Municipality, *read* "Monday" *for* the word "Friday"

R. R. DUTT, for *Commissioner*

COMMR.'S OFFICE, RAJSHAHI DIVN., JALPAIGURI, *the 20th July 1923*

## NOTIFICATION.

*No. 895M.*—It is hereby notified for general information that in the by election held on the 9th July 1923 in Ward No 1 of the Suri Municipality, in the district of Birbhum, Babu Mritunjoy Roy Chaudhuri was duly elected as Commissioner in place of Maulvi Abdul Kabir, deceased.

J. N. GUPTA, *Commissioner*.

COMMR.'S OFFICE, BURDWAN DIVN., CHINSURA, *the 19th July 1923*.

## NOTIFICATION.

*No. 22L.S.-G.*—It is hereby notified for general information that, under section 19 (*1*) of the Bengal Local Self-Government Act, III (B.C.) of 1885, as amended, Babu Phani Bhusan Banerjee has been duly elected to be a member of the Sadar Local Board in the Murshidabad district, in place of the Hon'ble Maharaja Sir Manindra Chandra Nandi, K.C.I.E., resigned.

J. H. LINDSAY, *Commissioner* (*offg.*).

COMMR.'S OFFICE, PRESY. DIVN., CALCUTTA, *the 17th July 1923*.

## NOTIFICATION.

*No. 24L.S.-G.*—In exercise of the power conferred on me by section 19 (*2*) of the Bengal Local Self-Government Act, III (B. C.) of 1885, as amended, I appoint Munshi Danesh Mohammad Mondal to be a member of the Sadar Local Board, Murshidabad, in place of Maulvi Muhammad Ali, deceased.

J. H. LINDSAY, *Commissioner* (*offg.*).

COMMR.'S OFFICE, PRESY. DIVN., CALCUTTA, *the 20th July 1923*.

## NOTIFICATION.

*No. 3403J.*—It is hereby notified for general information that, under section 19 (*1*) of the Bengal Local Self-Government Act (Bengal Act III of 1885), Maulvi Syedali has been duly elected to be a member of the Narayanganj Local Board in the district of Dacca, *vice* Babu Jogesh Chandra Gupta, resigned.

A. N. MOBERLY, *Commissioner* (*offg*).

COMMR.'S OFFICE, DACCA DIVN., DACCA, *the 21st July 1923*.

## NOTIFICATION.

*No. 1663L.S.-G.*—The following by-law adopted by the District Board of Hooghly as an addition to their existing by-law No. 18, at their special meeting held on the 25th June 1923 for preventing the steeping of jute, hemp, bamboos, hides or other offensive matter, is published, under rule 6 of the rules issued with Government notification No. 764T.M., dated the 7th September 1910, for general information.

The draft by-law will be taken into consideration on or after 31st August 1923 for the purpose of confirmation and any objection or suggestion which may be received by the undersigned before that date will be considered —

"No person shall steep any jute, hemp, bamboos, hides or any other offensive matter in any drain, borrow-pit, tank, *doba* or excavation situated within a distance of 300 feet from the inhabited portion of any village."

J. N. GUPTA, *Commissioner.*

COMMR.'S OFFICE, BURDWAN DIVN., CHINSURA, *the 20th July 1923*

## NOTIFICATION.

*No. 1607L.S.-G.*—It is hereby notified for general information that under section 13 of the Bengal Village Self-Government Act, 1919 (Bengal Act V of 1919), read with rule 39 of the rules for election and appointment of members of union boards made thereunder, Babu Upendra Nath Pal has been appointed by the District Magistrate of Hooghly to be a member of the Paschimpara union board in Badanganj police-station, in the Arambagh subdivision of the district of Hooghly, *vice* Babu Durga Das Bose, deceased.

J. N. GUPTA, *Commissioner.*

COMMR.'S OFFICE, BURDWAN DIVN., CHINSURA, *the 13th July 1923*

## NOTIFICATION.

*No. 1614L.S.-G.*—It is hereby notified for general information that under section 13 of the Bengal Village Self-Government Act, 1919 (Bengal Act V of 1919), read with rule 39 of the rules for election and appointment of members of union boards made thereunder, Babu Sarbari Bhusan Ghosh has been appointed by the District Magistrate of Howrah to be a member of the Sankrail union board in Sankrail police-station, in the Sadar subdivision of the district of Howrah, *vice* Babu Surja Kumar Banerjee, resigned

J. N. GUPTA, *Commissioner.*

COMMR.'S OFFICE, BURDWAN DIVN., CHINSURA, *the 13th July 1923*

## NOTIFICATION.

*No. 23L.S.-G.*—Whereas the election of members of the Islampur union committee, in thana Raninagar, in the Sadar subdivision of the Murshidabad district, constituted under Government notification No. 349T.-L.S.-G., dated the 23rd May 1918, failed, the number of voters present for each of the wards comprising the union being less than 10 per cent. of the total number of house-holders for each such ward, it is hereby notified for general information that in exercise of the power conferred on me by section 40 of the Bengal Local Self-Government Act, III (B. C.) of 1885, as amended, I appoint the following gentlemen to be members of the aforesaid union committee.—

1. Aizuddin Mandal.
2. Babu Radhakristo Das
3. " Kristo Das Gonai.
4. M. Torabuddin Biswas.
5. Babu Lalit Mohan Saha
6. M. Belat Hossain Sheikh.

2. In exercise of the power conferred on me by paragraph 2 of the Government notification No. 349T.-L.S.G., dated the 23rd May 1918, issued under section 41 of the Bengal Local Self-Government Act, III (B. C.) of 1885, as amended, I appoint the following gentlemen to be members of the aforesaid union committee.—

1. Babu Pranab Krishna Mazumdar.
2. " Hari Dhuli Sen.
3. " Radha Prasanna Dutt.

J. H. LINDSAY, *Commissioner (offg.).*

COMMR.'S OFFICE, PRESY. DIVN., CALCUTTA, *the 17th July 1923.*

## NOTIFICATION.

*No. 3247J.*—It is hereby notified for general information that, under sub-section (*2*) of section 6 of the Bengal Village Self-Government Act, 1919 (Act V of 1919), the following gentlemen have been duly elected to be members of the Fatulla union board in Fatulla police-station, in the Narayanganj subdivision of the Dacca district :—

1. Muhammed Misir Ali Mia
2. „ Abdul Gaffur.
3. Babu Surendra Mohan Das
4. Mahammed Tufani Pradhan
5. „ Sarjuddin Khandakar
6. „ Babur Ali Mia.

2. Under sub-section (*3*) of section 6 of the said Act, the following gentlemen have been appointed by the District Magistrate, Dacca, to be members of the aforesaid union board :—

1. Babu Manindra Chandra Das.
2. „ Subhankar Das.
3. „ Nitya Hari Sardar.

A. N MOBERLY, *Commissioner (offg.).*

COMMR.'S OFFICE, DACCA DIVN., DACCA, *the 16th July 1923.*

## NOTIFICATION.

*No. 3248J.*- It is hereby notified for general information that, under sub-section (*2*) of section 6 of the Bengal Village Self-Government Act, 1919 (Act V of 1919), the following gentlemen have been duly elected to be members of the Aminpur union board in Baidyerbazar police-station, in the Narayanganj subdivision of the Dacca district :—

1. Munshi Idris Ali Sikdar
2. „ Abdul Bari Bhuiya.
3. Babu Durga Charan Datta
4. „ Gostha Behari Das.
5. „ Syama Charan Bhoumik.
6. „ Pramatha Nath Ganguli

2. Under sub-section (*3*) of section 6 of the said Act, the following gentlemen have been appointed by the District Magistrate, Dacca, to be members of the aforesaid union board :—

1. Babu Krishna Kumar Karmaker
2. „ Radhika Kumar Sardar.
3. Munshi Abdur Rahim Khandakar

A. N. MOBERLY, *Commissioner (offg.)*

COMMR.'S OFFICE, DACCA DIVN., DACCA, *the 16th July 1923.*

## NOTIFICATION.

*No. 2951G.*—Under section 13 of the Bengal Village Self-Government Act, V of 1919, read with rule 38 of the Rules for the election and appointment of members of union boards, the District Magistrate of Noakhali has declared Munshi Mahamad Anwar Meah to be duly elected member of the Sandarpur union board, police-station Feni, in the district of Noakhali, in place of Munshi Basiruddin Ahmed, deceased.

A. H. CLAYTON, *Commissioner (offg.).*

COMMR.'S OFFICE, CHITTAGONG DIVN., CHITTAGONG, *the 19th July 1923.*

## NOTIFICATION.

*No. 1656L.S-G.*—It is hereby notified for general information that under section 13 of the Bengal Village Self-Government Act, 1919 (Bengal Act V of 1919), read with rule 38 of the Election Rules for union boards made thereunder, Babu Basanta Kumar Paul has been duly elected to be a member for Ward No. I of the Kalyanpur union board in Kalna police-station in the Kalna subdivision of the district of Burdwan, *vice* Babu Jogesh Chandra Mukherji, removed.

J. N. GUPTA, *Commissioner.*

COMMR.'S OFFICE, BURDWAN DIVN., CHINSURA, *the 19th July 1923.*

## NOTIFICATION.

*No. 356M.*— It is hereby notified for general information that under rule 20 (*b*) of the Manual of Rules for the management of charitable hospitals and dispensaries in Bengal, the following gentlemen have been appointed to be members of the committee for the management of the charitable dispensary at Chandrakona in the district of Midnapore :—

1. The Subdivisional Officer, Ghatal ... } *Ex officio.*
2. „ Assistant Surgeon, Ghatal ... }
3. Babu Bijoy Krishna Banerjee.
4. „ Chandi Charan Ghosal.
5. „ Jagadish Chandra De.
6. Pandit Ram Charan Ramanuj Das Mahanta.
7. Babu Durga Das Mallik.
8. „ Bankim Chandra De.
9. „ Nil Kanta De.
10. „ Kali Pada Bhattacharjee.
11. „ Ram Taran Goswami.
12. „ Sarada Charan Chakraverti.

J. N GUPTA, *Commissioner.*

COMMR.'S OFFICE, BURDWAN DIVN., CHINSURA, *the 14th July 1923*

---

## NOTIFICATION.

*No. 3355J.*—It is hereby notified for general information that, under rule 20 (*b*) of the Manual of Rules for the management of charitable hospitals and dispensaries in Bengal, the following gentlemen are appointed to be additional members of the Committee for the management of the Sadar Charitable Dispensary at Faridpur, in the district of Faridpur :—

1. Rai Kamini Kumar Roy Bahadur, B.L.
2. Babu Prokash Chandra Ghose, pleader.

A. N. MOBERLY, *Commissioner (offg.).*

COMMR.'S OFFICE, DACCA DIVN., DACCA, *the 19th July 1923.*

---

## NOTIFICATION.

*No. 249P.W.*—It is hereby notified for general information that, in exercise of the powers delegated to me by Bengal Government notification No. 3403L.S.-G., dated the 1st December 1904, I order the establishment, under section 6 (*c*) of the Bengal Ferries Act, I of 1885, of a temporary ferry—class BII—over the break at the 11th mile of the District Board Road No. 98 in village Pearapur, police-station Gaibandha, in the Gaibandha subdivision, in the district of Rangpur.

2. In exercise of the powers delegated to me by Bengal Government notification No. 217L.S.-G., dated the 12th January 1905, I also direct, under section 35 of the same Act, that the abovementioned temporary ferry shall be managed by the District Board of Rangpur and that all the proceeds of the said ferry and all the fines levied and the compensation received under the said Act in respect thereof shall be paid into the District Fund with effect from the date of this notification.

W. A. MARR, *Commissioner (offg.).*

COMMR.'S OFFICE, RAJSHAHI DIVN., JALPAIGURI, *the 16th July 1923.*

---

## NOTIFICATION.

UNDER rule 61 (*3*), section IX of the rules for the managing committees of the Government High Schools the following gentlemen have been appointed as members of the Committee for the management of the Darjeeling High School for the period ending 10th November 1925 :—

1. Kazi Samsuddin Ahmad, *vice* Maulvi S. A. Afzali.
2. Babu Surendra Mohan Chaudhuri, B.T., *vice* Babu Aswini Kumar Bhattacharjee, B.T., transferred.
3. Rev. W. G. Macken, *vice* Rev. H. C. Duncan, on leave.

F. W. STRONG, *Deputy Commissioner.*

COMMR.'S OFFICE, DARJEELING DIVN., DARJEELING, *the 20th July 1923.*

# The Calcutta Gazette

WEDNESDAY, JULY 25, 1923.


## PART IB.

### *Educational Notices.*

### GOVERNMENT COMMERCIAL INSTITUTE, CALCUTTA.

#### The Evening Lectures.

Courses of evening lectures are delivered in the following subjects. A student can take up one subject or several subjects, provided the class hours permit him to attend the lectures in each subject :—

(*a*) Book-keeping (Elementary).
(*b*) Book-keeping (Advanced).
(*c*) Shorthand (Theory).
(*d*) Shorthand (Speed)
(*e*) Typewriting.
(*f*) English (including commercial correspondence, letter-drafting and précis-writing).
(*g*) Outlines of Political Economy.
(*h*) Banking and Currency
(*i*) Annuities and Insurance.
(*j*) Mercantile Law
(*k*) Accountancy and Auditing.

The courses of lectures commence in July and continue until the following April except the course of Accountancy and Auditing, which extend over two years.

(*a*) **Book-keeping (Elementary).**—Students having a satisfactory knowledge of English and Arithmetic are admitted. Text-book—Arthur Fieldhouse's Complete Book-keeping, up to 100 exercises including partnership accounts. The fee for the full session, July to April, is Rs. 24, payable in eight monthly instalments of Rs. 3 each. Classes are held three times a week from 6 to 7 P.M.

(*b*) **Book-keeping (Advanced).**—Students who have passed the Elementary Book-keeping Examination, or who can give satisfactory proof of their knowledge of Elementary Book-keeping up to the requisite standard, are admitted. Text-book—Complete Book-keeping by Arthur Fieldhouse. The fee for the full session, July to April, is Rs 32, payable in eight monthly instalments of Rs. 4 each. Classes are held twice a week from 6 to 7 P.M.

(*c*) **Shorthand (Theory).**—Pitman's Shorthand is the system taught Students having a sufficient knowledge of English are admitted at the beginning of the session in July. Students are also admitted in December, provided they have already a sufficient knowledge of Shorthand to enable them to appreciate the lectures in the session, December to April.

# The Calcutta Gazette

WEDNESDAY, JULY 25, 1923


## PART IA.

### *Orders and Notifications by the Government of India.*

The following notification, issued by the Government of India in the Legislative Department, published in the *Gazette of India*, dated the 7th July 1923, is republished for general information.

L. BIRLEY,
*Chief Secretary to the Government of Bengal*

NOTIFICATION.

*Simla, the 5th July 1923.*

*No 133*.—In pursuance of the provisions of sub-rule (2) of rule 24 of the Legislative Assembly Electoral Rules, the Governor General is pleased to nominate Mr. Probodh Chandra Chatarji, being an official, to be a Member of the said Legislative Assembly

L. GRAHAM,
*Secretary to the Government of India (offg.).*

The following notifications, issued by the Government of India in the Finance Department, published in the *Gazette of India*, dated the 7th July 1923, are republished for general information

L. BIRLEY,
*Chief Secretary to the Government of Bengal*

NOTIFICATIONS.

CUSTOMS.

*Simla, the 7th July 1923.*

*No. 577*.—In exercise of the powers conferred by section 19 of the Sea Customs Act, 1878 (VIII of 1878), the Governor General in Council is pleased to prohibit the bringing by sea or by land into British India of any copy of any publication issued by the Indian Mujahidin Association, Chamarkand, otherwise known as the Chamarkand colony of the Hindustani Fanatics, wherever and in whatever language it may be printed.

*No. 581*.—In exercise of the powers conferred by section 19 of the Sea Customs Act, 1878 (VIII of 1878), the Governor General in Council is pleased to prohibit the bringing by sea or by land into British India of any copy of any publications issued by M N. Roy or Evelyn Roy wherever and in whatever language they may be printed.

## INTOXICATING DRUGS.

*The 7th July 1923.*

*No 579*—In exercise of the power conferred by section 19 of the Sea Customs Act, 1878 (VIII of 1878), and in supersession of the notification of the Government of India in the Department of Commerce No. 6821, dated the 30th December 1922, the Governor General in Council is pleased to restrict the taking by sea or by land out of British India of the following goods, namely —

(*a*) the derivatives of opium, namely, medicinal opium, morphine and its salts, and heroin , and

(*b*) cocaine and its salts ,

to cases in which the consignment to be exported is covered by a completed certificate in the form hereto annexed issued under the authority of the Government of the country of destination

### IMPORT CERTIFICATE

### INTERNATIONAL OPIUM CONVENTION, 1912

*Certificate of Official Approval of Import*

I hereby certify that the Ministry of being the Ministry charged with the administration of the law relating to the dangerous drugs to which the International Opium Convention of 1912 applies, has approved the importation by

(Name, address and business of importer)

(*a*)

(Exact description and amount of drug to be imported.)

of (*b*)

(Name and address of firm in exporting country from which the drug is to be obtained )

from (*c*)

(State any special conditions to be observed, *e g* , not to be imported through the post.)

subject to the following conditions (*d*) and is satisfied that the consignment proposed to be imported is required

(1) for legitimate purposes (in the case of raw opium),*

(2) solely for medicinal or scientific purposes (in the case of drugs to which Chapter III of the Convention applies)

Signed on behalf of the Ministry of

Signature

Official rank

Date

*Where the use of prepared opium has not yet been suppressed and it is desired to import opium for this purpose, a certificate should be given to the effect that it is required for the purpose of smoking under Government restrictions pending complete suppression, and that it will not be re-exported

A. C. MCWATTERS,
*Secretary to the Government of India (offg.).*

The following notifications, issued by the Government of India in the Home Department, published in the *Gazette of India*, dated the 14th July 1923, are republished for general information.

L. BIRLEY,
*Chief Secretary to the Government of Bengal*

## NOTIFICATIONS

### ESTABLISHMENTS

*Simla, the 10th July 1923*

*No. F.-137-23.*—The provisional regulations for the Indian Civil Service competitive examination to be held in India in 1924, which were published with the Home Department notification No F-137-23-Ests., dated the 5th June 1923, ceased to be provisional and came into operation on the 28th June 1923

J. CRERAR,
*Secretary to the Government of India*

### JUDICIAL

*The 10th July 1923.*

*No. F.-238-23.*—Mr. A J Chotzner, I C S, took his seat as an acting Judge of the High Court of Judicature at Fort William in Bengal on the forenoon of the 29th June 1923.

*The 12th July 1923.*

*No F-393-23.*—Mr. S R Das, Barrister-at-law, Advocate-General for the Presidency of Bengal, is granted leave of absence under rule 287 (*a*) of the Supplementary Fundamental Rules, during this year's vacation of the High Court of Judicature at Fort Willam in Bengal

*No. F-393-1-23.*—Mr. P. L Mitter, Barrister-at-law, Standing Counsel, Bengal, is appointed to act as Advocate-General for the Presidency of Bengal during the absence on leave of Mr S R Das, Barrister-at-law, or until further orders

C W. GWYNNE,
*Joint Secretary to the Government of India (offg ).*

---

The following notification, issued by the Government of India in the Foreign and Political Department, published in the *Gazette of India*, dated the 14th July 1923, is republished for general information

L. BIRLEY,
*Chief Secretary to the Government of Bengal*

## NOTIFICATION.

*Simla, the 9th July 1923*

*No. 2041-1251-G.*—Subject to the confirmation of His Majesty's Government, the Governor-General in Council is pleased to recognise provisionally the appointment of Mirza Mohamed Ispahani as Consul for Persia at Calcutta

DENYS BRAY,
*Secretary to the Government of India.*

---

The following notifications and resolution, issued by the Government of India in the Finance Department, published in the *Gazette of India*, dated the 14th July 1923, are republished for general information

L. BIRLEY,
*Chief Secretary to the Government of Bengal*

## NOTIFICATIONS

### CUSTOMS.

*Simla, the 14th July 1923 .*

*No. 614.*—In exercise of the powers conferred by section 19 of the Sea Customs Act, 1878 (VIII of 1878), the Governor General in Council is pleased to cancel the notification

in the Department of Commerce, No. 6908, dated the 3rd December 1921, relating to the prohibition of the bringing by sea or by land into British India of any copy of the newspaper entitled the "Catholic Herald" published in London.

*No. 616.*—In exercise of the powers conferred by section 19 of the Sea Customs Act, 1878 (VIII of 1878), and in supersession of the notification of the Government of India in this Department No 383, dated the 9th June 1923, the Governor General in Council is pleased to prohibit the bringing by sea into British India of any goods marked with the Royal Arms and manufactured in any place outside His Majesty's dominions.

CUSTOMS ESTABLISHMENTS.

*The 14th July 1923.*

*No 620.*—Mr. W. W. Nind reverted to the Imperial Customs Service with effect from the 14th June 1923, and is re-appointed to act as Collector in the service at Calcutta, with effect from the 25th idem

*No 621.*—Mr G N. Bower, acting Collector in the Imperial Customs Service at Calcutta, reverted to his substantive appointment of Assistant Collector in the service, with effect from the 25th June 1923

STAMPS

*The 14th July 1923*

*No 619*—In exercise of the powers conferred by section 20, sub-section (*2*) of the Indian Stamp Act, 1899 (II of 1899), the Governor General in Council is pleased to direct that the following amendment shall be made in the notification of the Government of India in the Department of Commerce, No 348, dated the 13th January 1923, as subsequently amended, namely.—

In the third column of the second item of the table for the words and figures "3/14 of a rupee, *i e*, francs 70=Rs. 15" the words and figures "1/50 of a rupee, *i e.*, francs 75=Rs 15" shall be substituted, and in the third column of the third item of the table for the words and figures "1/14,250 of a rupee, *i e*, Marks 2,13,750=Rs. 15" the words and figures "1/35,000 of a rupee, *i e*, Marks 5,25,000=Rs 15" shall be substituted.

RESOLUTION

*Simla, the 5th July 1923.*

*No. 1533-Ex*—In exercise of the powers conferred by section 96-B (*2*) of the Government of India Act, the Secretary of State for India in Council has been pleased to make the following rules regulating the grant of overseas pay to members of services or to holders of posts for which he has sanctioned such pay

2. The Secretary of State in Council has decided that these rules shall have effect from the 3rd January 1921, and that the principles laid down in the rules shall be applied retrospectively from the dates on which overseas pay came into force for the various services or posts concerned The object of the grant of retrospective effect is to place the grant of overseas pay on a uniform basis from its inception. An officer not entitled to overseas pay under these rules will not, however, be required to refund any amounts which he may have drawn in good faith.

3 It will be observed that under the rules an officer who has been promoted to an Imperial Service from a provincial or subordinate service or from an outside post and is of non-Asiatic domicile is entitled, subject to the proviso in rule 1 (*a*), to overseas pay from the date on which he became a member of the service. It has been decided that an officer who is admitted to an Imperial Service by promotion should become a member of that service in all respects and that there is no valid reason why he should be treated differently, in respect of overseas pay, from members of the service recruited from other sources This decision will not, however, supersede that embodied in clause (*1*) of the Home Department resolution No 1260, dated the 24th June 1920, because Provincial Civil Service officers on appointment to hold listed Indian Civil Service posts do not become members of the Indian Civil Service; they remain members of the Provincial Civil Service and it is considered that the pay fixed for them is a fair remuneration independently of overseas pay.

OVERSEAS PAY.

1. Overseas pay at the rate or rates sanctioned for a particular service or post may be drawn by the following classes of officers serving in such service or holding such post, namely:—

(*a*) any officer having at the date of his appointment to such service or post his domicile elsewhere than in Asia:

Provided that no such officer shall be entitled to this concession who, prior to such appointment, has for the purpose of his appointment to any office under the Government or of the conferment upon him by the Government of any scholarship, emoluments or other privilege, claimed or been deemed to be a native of India;

(*b*) any officer having at the date of his appointment his domicile in Asia, to whom this concession has been extended by any general or special order of the Secretary of State in Council.

2 For the purposes of these rules, the domicile of a person shall be determined in accordance with the provisions set out in the Schedule to these rules

Provided that a person who was born and has been educated exclusively in Asia, and has not resided out of Asia for a total period exceeding six months, shall be deemed to have his domicile in Asia

3. No officer who after his appointment to a service or post acquires a new domicile shall thereby lose his right to or become entitled to overseas pay.

4. If any question arises as to the domicile of any officer at the time of his appointment, the decision thereon of the Secretary of State in Council in the case of persons appointed by him, of the Governor General in Council in the case of persons appointed by him, or of the local Government in the case of persons appointed by them, shall be final.

THE SCHEDULE.

*Provisions for the determination of Domicile*

1. A person can have only one domicile

2 The domicile of origin of every person of legitimate birth is in the country in which at the time of his birth his father was domiciled, or, if he is a posthumous child, in the country in which his father was domiciled at the time of the father's death.

3. The domicile of origin of an illegitimate child is in the country in which at the time of his birth his mother was domiciled

4. The domicile of origin prevails until a new domicile has been acquired, and a new domicile continues until the former domicile has been resumed or another has been acquired

5.—(1) A person acquires a new domicile by taking up his fixed habitation in a country which is not that of his domicile of origin.

(2) Any person may, if the law of any country so provides, and subject to any such provisions, acquire a domicile in that country by making, in accordance with the said provisions, a declaration of his desire to acquire such domicile.

*Explanation 1*—A person is not to be considered as having taken his fixed habitation in a country merely by reason of his residing there in His Majesty's civil or military service or in the exercise of any profession or calling.

*Explanation 2.*—A person does not acquire a new domicile in any country merely by reason of residing as part of the family or as a servant of any ambassador, consul, or other representative of the Government of another country.

6. The domicile of a minor follows the domicile of the parent from whom he derives his domicile of origin:

Provided that the domicile of a minor does not change with that of his parent if the minor is married or holds any office or employment in the service of His Majesty or has set up with the consent of the parent in any distinct business.

7. After marriage a woman acquires the domicile of her husband if she had not the same domicile before and her domicile during the marriage follows the domicile of her husband:

Provided that if the husband and wife are separated by the order of a competent court or if the husband is undergoing a sentence of transportation, the wife becomes capable of acquiring an independent domicile.

8. Save as otherwise provided above a person cannot during minority acquire a new domicile.

9. An insane person cannot acquire a new domicile in any other way than by his domicile following the domicile of another person.

Ordered that the Resolution be published in the *Gazette of India.*

A. C. MCWATTERS,
*Secretary to the Government of India (offg.).*

The following resolution, issued by the Government of India in the Department of Commerce, published in the *Gazette of India*, dated the 14th July 1923, is republished for general information.

L. BIRLEY,
*Chief Secretary to the Government of Bengal.*

RESOLUTION.

*Simla, the 10th July 1923*

TARIFFS.

*No. 3748.*—On February the 16th, 1923, the following resolution was adopted by the Legislative Assembly :—

"That this Assembly recommends to the Governor General in Council—

(*a*) that he accepts in principle the proposition that the fiscal policy of the Government of India may legitimately be directed towards fostering the development of industries in India,

(*b*) that in the application of the above principle of protection, regard must be had to the financial needs of the country and to the present dependence of the Government of India on import, export and excise duties for a large part of its revenue,

(*c*) that the principle should be applied with discrimination, with due regard to the well-being of the community and to the safeguards suggested in paragraph 97 of the report of the Indian Fiscal Commission,

(*d*) that in order that effect may be given to these recommendations, a Tariff Board should be constituted for a period not exceeding one year in the first instance, that such Tariff Board should be purely an investigating and advisory body and should consist of not more than three members, one of whom should be a Government official, but with power, subject to the approval of the Government of India, to co-opt other members for particular inquiries."

2. The Government of India have decided to appoint a Tariff Board, for a period not exceeding one year in the first instance, to carry out the investigations resulting from the acceptance of that resolution and to make recommendations thereon. The following gentlemen have agreed to serve on the Board —

*President*

G. RAINY, Esquire, C.S.I., C.I.E., I.C.S.

*Members*

The Hon'ble Mr. V. G. KALE, Professor of Economics, Fergusson College, Poona.
P. P. GINWALA, Esquire, M.L.A., Bar.-at-Law.

Rai Bahadur S. N. Banerji, Assistant Secretary, Commerce Department, has been appointed Secretary to the Board.

3. The Government of India will select the industries to be taken up for investigation and determine the order of the inquiry and it will be the duty of the Tariff Board, after such examination as it thinks necessary, to make recommendations regarding the protection (if any) to be extended to those industries and the nature and extent of the protection. Firms or persons (other than those referred to in the next paragraph) desiring that the industries in which they are interested should be investigated by the Tariff Board should apply to the Secretary to the Government of India in the Commerce Department. With their applications they should send up a full statement of the reasons why they consider that protection should be extended to the industry.

4. The Board will assemble immediately at Simla. As recommended by the Fiscal Commission in paragraph 107 of its Report, the Board will examine first the question of extending protection to the manufacture of steel in India. In considering this question, the Board will take into account the effect of any recommendations it may make on industries dependent on the use of steel, and in particular, it will consider how its recommendations will affect the industries referred to in paragraph 9 of the Report of the Railway Industries Committee, and whether those industries should be accorded protection. Firms or persons interested in the steel industry or the industries dependent on the use of steel, who desire that their views should be considered by the Tariff Board, should address their representations to the Secretary to the Board.

The headquarters of the Board will be with the Government of India, but it will visit from time to time commercial and industrial centres in India for the purpose of the investigations which it may be required to undertake While the steel industry is under examination, the office of the Board will be located temporarily at Calcutta. For the investigation of other industries, it may be necessary to transfer the office from time to time to other convenient centres.

5 The Government of India trust that Local Governments and Administrations will afford the Board all the assistance which it may require and will comply with any request for information which may be addressed to them by it

*Order*—Ordered that a copy of the above resolution be communicated to all Local Governments and Administrations, the Director General of Commercial Intelligence, and to the Secretary of the Indian Tariff Board.

Ordered also that it be published in the *Gazette of India*

D T CHADWICK,
*Secretary to the Government of India*

The following order, issued by the Government of India in the Army Department, published in the *Gazette of India*, dated the 14th July 1923, is published for general information.

L BIRLEY,
*Chief Secretary to the Government of Bengal*

*Simla, the 13th July 1923*

**PART B.**

APPOINTMENTS

AUXILIARY FORCE, INDIA

*No. 939*—The undermentioned gentlemen are granted commissions, with effect from the dates specified —

*Calcutta Light Horse*

*To be Lieutenant*

Henry Meiklam Prescott Hewett, Dated 1st May 1923.

E BURDON,
*Secretary to the Government of India*

The following notification, issued by the Government of India in the Department of Industries and Labour, published in the *Gazette of India*, dated the 14th July 1923, is republished for general information.

L BIRLEY,
*Chief Secretary to the Government of Bengal*

NOTIFICATION.

CIVIL—AVIATION

*Simla, the 12th July 1923.*

*No. 24.*—In exercise of the powers conferred by section 3 of the Indian Aircraft Act, 1911 (XVII of 1911), and in modification of paragraph 4 of the Commerce Department notification No. 1736, dated the 5th March 1921, the Governor General in Council is pleased to make the following amendment in rule 26 of the Indian Aircraft Rules, 1920, regarding fees for medical examination.

1. In rule 26 of the said rules—

For the figures Rs. 64 and Rs. 32 substitute Rs 32 and Rs. 16 respectively.

A H. LEY,
*Secretary to the Government of India*

The minimum speed required to pass the examination is 80 words per minute. The class is held daily from 5 P.M.

The fee for the session, July to November, is Rs. 12, which may be paid in four monthly instalments of Rs. 3 each. The fee for the session, December to April, is Rs. 16, which may be paid in four monthly instalments of Rs. 4 each.

(*d*) **Shorthand (Speed).**—Students having a speed of 60 words per minute are admitted in July, and the class practice is from 60 to 120 words per minute

Students having a minimum speed of 80 words per minute are admitted in December, and the class practice is from 80 to 140 words per minute.

In the examination the tests are at four grades of speed, 80, 100, 120, 140 words per minute, and at higher speeds if candidates can write more rapidly Classes are held daily from 6 P.M Fees are the same as for (*c*).

(*e*) **Typewriting.**—Beginners are admitted in July Students having a minimum speed of 20 words per minute are admitted in December Text-book—Practical Course in Touch Typewriting by Charles E Smith. The minimum speed required to pass the examination at the end of April is 35 words per minute. Certificates are issued for 35, 40, 45, 50, 55, 60 words per minute For each of the speed tests there is a corresponding accuracy test in tabulating Classes are held at 5, 6 and 7 P.M. Tuition fees are the same as for (*c*) A stationery fee of Re. 1 is payable on admission.

**Combination of the above subjects and reduction of fee.**—If a student simultaneously takes up two or three of the subjects (*a*) to (*e*), a reduction of Re. 1 per instalment of each of the fees payable by him will be granted : for example, if a student is a member of both the Shorthand and the Elementary Book-keeping classes, he will have to pay instalments of Rs. 2 for each subject instead of Rs 3 for the session, July to December.

(*f*), (*g*), (*h*), (*i*) **and** (*j*)—Classes are formed in these subjects if a sufficient number of candidates apply for admission. The fee for each subject is Rs. 3 for each series of ten lectures.

(*k*) **Accountancy and Auditing.**—There are two courses of year each for ordinary students, or one year for those who are already practising as Auditors, to prepare candidates for the Government examination of Diploma in Accountancy, which qualifies them to obtain the Government license to practise as Auditors Students of this class have to attend Book-keeping and Mercantile Law classes, for which no extra fee has to be paid The fee is Rs. 144, payable in advance in four half-yearly instalments of Rs 36 each in the case of ordinary students and Rs 72 in two half-yearly instalments of Rs. 36 each in the case of those who are practising as Auditors and hold a provisional license granted by Government.

2. **Examinations.**—The examination in subjects (*a*) to (*j*) is held at the end of April, at the end of the year's course, under the control of the Government Commercial Institute Board, and successful candidates receive certificates signed by the Director of Public Instruction, Bengal, and countersigned by the Secretary to the Bengal Chamber of Commerce. The examination fee for each subject is Rs. 5.

3. **Attendance.**—Strict regularity and punctuality of attendance are observed. Students must attend 75 per cent. of the lectures in order to appear at the examination. Classes are not held in the evening on Saturday.

4. **Standard of Admission.**—Candidates who have attended the lectures of the day course are eligible for admission Others will be admitted, provided they appear qualified for the class or classes they seek to join.

5. **Prizes.**—Prizes of Rs. 50 each are offered by the Bengal Chamber of Commerce to the best candidates from the evening classes in subjects (*b*), (*d*), (*f*), (*g*), (*h*), (*i*) and (*j*). Three medals are offered by the Remington Typewriter Company to the best three students of either the day or evening classes in the Typewriting examination.

6. **Admission.**—Candidates for admission should send in their applications and register their names, with a deposit of fees, before the end of June. Candidates who desire to be admitted in December should apply before the end of November.

7. **Athletics and other Institute activities.**—Students have to pay a fee of Re. 1 on admission for athletics and other institute activities.

8. Tuition fees for different subjects mentioned above may be slightly increased. The matter is under consideration of Government.

G. K. SEN, *Principal (offg.).*

CALCUTTA, *the 5th June 1923.*

## THE GOVERNMENT COMMERCIAL INSTITUTE.

### The Day Course.

1. There is a specialized Day Course extending over two years. Candidates who have passed the Matriculation Examination are eligible for admission. Others are admitted, provided they satisfy the Education Department, by passing a preliminary test examination of a similar standard, that they have sufficient general education to enable them to derive advantage from the teaching.

2. **Compulsory subjects:—**

(a) English (modern), and especially English Correspondence, including Commercial Correspondence, letter-drafting and precis-writing
(b) Arithmetic, including Commercial and Mental Arithmetic.
(c) An Indian vernacular
(d) Commercial Geography
(e) Book-keeping (Junior).

For an Indian vernacular, the Institute provides a thorough training in Bengali Students taking up any other vernacular are given directions for the examination for which they have to prepare themselves Anglo-Indian candidates who have passed the Higher Standard examination in an Indian vernacular held by the Inspector of European Schools, Bengal, or who have passed the Lower standard examination in an Indian vernacular held by the Board of Examiners, will be further examined in the same vernacular in the following manner —

(1) They will be examined orally to test their command of the vernacular for the ordinary purposes of business.
(2) They will have to translate into English a business letter dictated in the vernacular and will be examined in both the dictation and translation.

3 **Optional Subjects.**—Shorthand and Typewriting—(A candidate may take up one or both, according to his option).

A student must take up all the compulsory subjects and must pass in each to obtain the final certificate Passing in the optional subjects—Shorthand and Typewriting—is counted towards a prize.

4 **Examination.**—At the end of the first year's course, an examination is held to determine promotion to the second year class and to decide the award of scholarships. At the end of the two years' course the final examination is held towards the end of the April or the beginning of May. A candidate who fails in one of the five compulsory subjects is not eligible for a pass certificate. A candidate who fails in one subject only in the final examination may appear again in the final examination in the following year in that subject without attending the class A candidate who fails in only two subjects in the final examination may appear in the final examination in the following year in those subjects, provided that he attends the classes in those subjects.

A candidate who attends a final examination to be examined in a subject in which he has previously failed must pass again in English, if English was not a subject in which he had failed, in order to obtain the diploma.

5. **Text-books.**—The following text-books are prescribed —
(a) English—Hooper and Graham's "Home Trade."
(b) Arithmetic—Grant and Hill's "Commercial Arithmetic" and "Mental Arithmetic."
(c) Bengali—"Kapalkundala" by Bankim Chandra Chatterjee, and "Prathamik Babosasiksha" by Santosh Nath Sett.
(d) Geography—"Commercial Geography of the World" by A. J Herbertson, "A Short Commercial Geography" by L. W. Lyde, "A School Economic Atlas" by J. G. Bartholomew and "A new Geography of the Indian Empire, Burma and Ceylon" by Morrison
(e) Book-keeping—Arthur Fieldhouse's "Complete Book-keeping."
(f) Shorthand—Pitman's Shorthand Instructor, Centenary edition.
(g) Typewriting—Practical Course in Touch Typewriting by Charles E. Smith.

The text-books cost about Rs. 35.

6. **Session and Fees.**—The session begins about the end of June and closes about the end of April. The usual summer and Puja vacations are given. The students have to pay an admission fee of Rs. 5 and monthly tuition fee at the rate of Rs. 5 beginning from June. The final examination fee is Rs 8. Tuition fees are to be paid monthly in advance after admission. Stationery fee of Re. 1 is payable once a year at the beginning of each session by the students who have taken Typewriting as optional subject. A yearly subscription of Re. 1 is also payable at the beginning of each session by students of both the first and second year classes for Athletics and other Institute activities.

7. **Attendance.**—Strict regularity of attendance is enforced. Students attending less than 75 per cent. of the lectures are debarred from promotion to the second-year class or from appearing at the final examination. Classes are held from 10-30 A.M. to 4 P.M. with half-an-hour's interval daily from 1-30 to 2 P.M. On Saturdays classes are held from 10-30 A.M. to 1-30 P.M.

8. **Scholarships and Prizes.**—Three scholarships of Rs. 12 each per mensem, tenable for one year are awarded to those students of the first-year class who, amongst those admitted, have secured the highest marks in English at the Matriculation Examination of the Calcutta University. Three scholarships of Rs. 20 each per mensem, tenable for one year, are awarded to those students of the second-year class who obtained the highest total marks at the examination held at the end of the first year's course. Holders of Junior and Senior scholarships at the Matriculation Examination are not eligible for these scholarships. The best two students in the final examination at end of two years' course obtain prizes of Rs. 75 and 50, respectively, offered by the Bengal Chamber of Commerce. The Remington Typewriter Company present medals to the best three students in typewriting at the final or special examination.

9. Applications for admission must reach the Principal before the 30th June every year. As only a limited number can be enrolled, priority of application is considered.

(A separate prospectus is issued for the evening lectures.)

G. K. SEN, *Principal (offg.).*

CALCUTTA, *the 5th June 1923.*

---

**UNIVERSITY OF CALCUTTA.**

NOTIFICATION.

It is announced for general information that a centre is created at Bankura for holding the B. Sc Examination of this University from 1924 (including the Practical Examinations in Chemistry and Physics).

By order of the Vice-Chancellor and Syndicate,

A. C. BOSE,
*Controller of Examinations.*

SENATE HOUSE, *the 13th July 1923.*

---

**UNIVERSITY OF CALCUTTA.**

No. 2150.

THE following orders of the Government of Bengal in the Ministry of Education are published for general information —

The Government of Bengal in the Ministry of Education are pleased to order that the *Bethune College, Calcutta*, shall be affiliated in *Chemistry* to the I. A. Standard with effect from the commencement of the session 1923-24; and that the *Brajamohan College, Barisal*, shall be affiliated in English, Vernacular Composition, Mathematics, Physics and Chemistry to the I. Sc Standard and in Physics to the I.A. Standard with effect from the commencement of the session 1923-24.

J. CHAKRAVORTY, *Registrar (offg.).*

SENATE HOUSE, *the 17th July 1923.*

---

**UNIVERSITY OF CALCUTTA.**

NOTIFICATION.

THE undermentioned candidate has been admitted to the Degree of Doctor of Science. The subject of the thesis submitted to and approved by the Board of Examiners is stated below against his name :—

| Name of the candidate. | Thesis |
|---|---|
| Sasindrachandra Dhar ... | "On the solutions of Mathieu's Differential Equation and allied problems." |

A. C. BOSE, *Controller of Examinations.*

SENATE HOUSE, *the 25th July 1923.*

## ORDERS BY THE HON'BLE THE PRESIDENT AND THE COUNCIL OF THE CALCUTTA SANSKRIT ASSOCIATION.

### SANSKRIT FIRST EXAMINATION, 1923.

THE undermentioned candidates are declared to have passed the Sanskrit First Examination held in February 1923 :—

(*In alphabetical order.*)

### CALCUTTA PANDIT SABHA.

| Name of candidate. | Name of teacher | Place of *tol* |
|---|---|---|
| **MUGDHABODHA VYAKARAN.** | | |
| *First Division* | | |
| Bandyopadhyaya, Surendranath ... | Pandit Srikantha Smritiratna | Baradrone, 24 Parganas |
| Biswas, Parbatinarayan . | " Phambhushan Tarkavagisha | Tekmani Sanskrit College, Benares |
| Chakravarti, Nutbihari .. | " Purandas Kavya-Sankhyatirtha .. | 15, Mohanbagan Lane, Calcutta |
| Chattopadhyay, Bhutanath ... | " Matilal Smritiratna ... | Andulmauri, Howrah |
| " Kanailal ... | " Sarada Prasad Vidyaratna ... | Dakshin Barasat, 24-Parganas |
| Chaudhury, Jatindranath ... | " Panchanan Kavya-Smrititirtha ... | 22, Haralal Das Lane, Calcutta |
| *Second Division* | | |
| Bandyopadhyaya, Benimadhab .. | Pandit Dasaratha Smrititirtha . | Dwarhatta, Hooghly. |
| " Ramapada ... | " Dwarkanath Vidyavinode . | Champdani Hooghly |
| " Rohinikanta ... | " Ramgopal Smritiratna ... | Kanarbagan, Howrah |
| " Satischandra ... | " Nrityagopal Panchatirtha ... | Sital Chatuspathi, Ballygunge, Calcutta |
| Bhattacharyaya, Abinashchandra ... | " Amulyadhan K Vyakaranatirtha ... | Sitala, Sonarpur, 24-Parganas |
| " Atulchandra . | " Rakhaldas Vidyaratna ... | 116, Kasundia Road, Howrah |
| " Bamadev . | " Gaursundar Bhagavatdarsanacharyya | 176 Upper Chitpur Road, Calcutta |
| " Bibhutibhusan ... | " Dasarathi Smrititirtha | Dwarhatta, Hoogly |
| " Haricharan .. | " Saradacharan Kavya Jyotistirtha .. | Dhannyakuria, 24-Parganas. |
| " Lalitmohan . | " Nibaranchandra Smrititirtha .. | Tarakeswar, Hooghly |
| " Satischandra ... | " Dasarathi Smrititirtha ... | Dwarhatta, Hooghly |
| " Satischandra .. | " Ishanchandra Vidyaratna ... | Santi Sitalatala, Rasipur, 24-Parganas |
| Chakravarti, Bhudarchandra .. | " Kalipada Siromani ... | Chandpala, 24-Parganas |
| " Gopalchandra . | " Nakuleswar Kavyaratna ... | Basirhat, 24 Parganas |
| " Indubhushan .. | " Kalipada Siromani ... | Chandpala, 24 Parganas |
| " Trepuracharan . | " Sivaram Kavyatirtha | Aklaki, Hooghly |
| " Upendranath .. | " Rajkumar Vedantatirtha .. | Kaikala, Hooghly |
| Chattopadhyaya, Bhubanmohan .. | " Dasarathi Smrititirtha . | Dwarhatta, Hooghly |
| " Ramakrisna ... | " Harikishore Kavyatirtha ... | Khardaha, 24 Parganas. |
| " Suryyakumar ... | " Nrityagopal Panchatirtha ... | Sitalchatuspathi, Ballygunge, Calcutta |
| Chaudhuri, Sudhirmohan . | " Rajanikanta Kavyapuranatirtha ... | Behala, 24-Parganas |
| Ghosal, Bibhutibhusan .. | " Biresnath Kavyatirtha ... | Mulajore Sanskrit College, 24-Parganas |
| Goswami, Nabinchandra . | " Ramchandra Mallik Kavyasankhyatirtha ... | Bagbazar Street, Calcutta |
| " Radharaman . | " Deveshchandra Vidyaratna ... | Sanskrit Collegiate School, Calcutta |
| Kundu, Gobindakumar . | " Surendranath Shastri ... | 7, Bhim Ghosh Lane, Calcutta |
| Mandal, Jishnuchandra . | " Rajanikanta Kavyapuranatirtha ... | Behala, 24-Parganas |
| Mitra, Krisnanath ... | " Prajendranath Smrititirtha .. | Maheshpur, Jessore. |
| Mukhopadhyaya, Amulyachandra .. | " Saradaprasad Vidyaratna ... | Dakshin Barasat, 24-Parganas. |
| " Khagendranath ... | " Sasibhushan Mukhopadhaya ... | Bhabanipur, 24 Parganas |
| " Nrityagopal . | " Rakhaldas Vidyaratna .. | 116, Kasundia Road, Howrah. |
| " Probodhkumar ... | " Amulyadhan Kavyavyakaranatirtha... | Sitala, Sonapur, 24-Parganas |
| " Rairaman .. | " Ramratna Vedantaratna .. | Chundernagar |
| " Sachinandan ... | " Nibaranchandra Smrititirtha ... | Tarkeswar, Hooghly |
| Ray, Adyanath ... | " Ramchandra Mallick Sankhyatirtha ... | 17, Barabazar Street, Calcutta. |
| Sanyal, Krisnagopal ... | " Radhaballav Jyotistirtha ... | Sanskrit Collegiate School, Calcutta |
| Sen, Bhupendranath ... | " Sitanath Sen Kaviratna and Dwarakanath Tarkatirtha ... | Paruha, Murshidabad. |
| **KALAP.** | | |
| *First Division* | | |
| Dutta, Rameschandra ... | Pandit Pratapchandra Kavya Vyakaran Smrititirtha ... | 53, Raja Navakrisna Street, Calcutta. |

## CALCUTTA PANDIT SABHA—*contd.*

| Name of candidate. | Name of teacher. | Place of *tol*. |
|---|---|---|
| | **KALAP—*concld.*** | |
| | ***Second Division.*** | |
| Bal, Bimalchandra ... | Pandit Saradacharan Jyotiratna ... | 16, Nabinkundu Lane, Calcutta. |
| Bandyopadhyay, Batakrisna ... | " Dakshinacharan Smrititirtha ... | 5, Biswakosh Lane, Calcutta |
| Bhattacharyya, Abinaschandra ... | " Sosibhusan Siroratan .. | 91, Kalighat Road, Calcutta. |
| " Kalicharan ... | " Lakshmikanta Kavya Vyakaran Sankhyatirtha ... | 23, Rupnarayan Nandan Lane, Bhawanipur, Calcutta |
| " Kalinath ... | " Haridas Siddhantabagisa ... | Nakipur, Khulna. |
| " Haranchandra ... | " Krisnaprasanna Tarkabagisa ... | 29, Haralal Das Lane, Calcutta |
| " Prakashchandra .. | " Saradacharan Jyotistirtha ... | Dhanyakuria, 24-Parganas |
| Chakravarty, Amulyakumar ... | " Chandicharan Tarkatirtha ... | Shivakumarbhaban, Calcutta. |
| " Satyaranjan ... | " Surendrakumar Kavyatirtha ... | 98 Cornwallis Street, Calcutta |
| Das, Basantakumar ... | " Bipadbhanjan Vyakarantirtha ... | Jibsaya, Kola, Dacca. |
| " Probodhchandra ... | " Pratapchandra Kavya Vyakaran Smrititirtha .. | 53, Raja Nabakrisna Street, Calcutta |
| " Rameschandra ... | " Surendrakumar Kavyatirtha ... | 98, Cornwallis Street, Calcutta |
| Dasgupta, Jyotischandra .. | " Ashutosh Kavyatirtha .. | Khalisakota, Barisal |
| Dutta, Bholanath | " Pratapchandra Kavya Vyakaran Smrititirtha ... | 53, Raja Nabakrisna Street, Calcutta |
| Samajdar, Sasthicharan ... | " Ramachandra Shastri ... | 12, Sitanath Road, Calcutta |
| Sengupta, Jogendrachandra .. | " Lakhsmikanta Kavya Sankhyatirtha | 23, Rupnarayan Nandan Lane, Calcutta |
| " Ramchandra ... | " Ambikacharan Vidyabinode ... | 440, Kalighat Road, Calcutta |
| | **SUPADMA** | |
| | ***Second Division*** | |
| Bhattacharyya, Panchanan ... | Pandit Biresnath Kavyatirtha ... | Malajore Sanskrit College, 24-Parganas. |
| " Tarapada ... | " Akshayakumar Shastri ... | 6, Goabagan Street, Calcutta. |
| Chattopadhyaya, Divakar ... | " Purshottam Kavyatirtha ... | Sirampur Srinath Vidyalaya, Hooghly |
| Das-Ghosh, Nitaichandra ... | " Priyanath Tarkatirtha .. | Kasipur, 24-Parganas |
| De, Brajendrakumar ... | " Surendranath Shastri ... | 7, Bhim Ghosh Lane, Calcutta |
| Nath, Kasiswar ... | " Priyanath Tarkatirtha ... | Kasipur, 24 Parganas |
| Sarkar, Bibhutibhushan ... | " Ashutosh Siroratna ... | 109, Baranasi Ghosh Street, Calcutta |
| | **SANKSHIPTASARA** | |
| | ***Second Division*** | |
| Mukhopadhyaya, Birendranath ... | Pandit Ramanganath Kavyatirtha ... | Jhikhira, Hooghly |
| | **HARINAMAMRITA VYAKARAN.** | |
| | ***Second Division*** | |
| Bhattacharyya, Sasankabhusan ... | Pandit Abibhusan Kavyatirtha ... | Paikpara, 24-Parganas. |
| | **LAGHU KAUMUDI** | |
| | ***First Division.*** | |
| Bhattacharyya, Shyamacharan ... | Pandit Kulachandra Siromani ... | Uttarpara, Hooghly |
| Dwivedi, Srinath ... | " Chandrikdatta Misra ... | Shivakumarbhavan, Calcutta |
| Ghosh, Bipinkrishna ... | " Matilal Smritiratna ... | Andulmauri, Howrah |
| Gupta, Dwarakaprasad ... | " Chitrabahal Misra ... | Pustikarveda Pathshala, Bagbazar, Calcutta. |
| Jha, Ganesh ... | " Yogi Jha Vyakarantirtha ... | 12, Sikdarpara Street, Calcutta. |
| Misra, Abhinandan ... | " ditto ... | Visuddhananda Vidyalaya, Calcutta. |
| " Ramgobinda ... | " Brajabhusan Misra ... | Shivakumarbhavan, Calcutta. |
| Pandeya, Brajabhusan ... | " Teknath Misra ... | ditto. |
| Sarma, Basantilal ... | " Hanumandatta Kavyatirtha ... | 6, Mallick Street, Calcutta. |
| " Bhagavan ... | " Siddhinath Misra ... | Shivakumarbhavan, Calcutta. |
| Tripathi, Joynath ... | " ditto ... | ditto. |
| " Ramkishore ... | " Saradaprasad Misra ... | ditto. |

## CALCUTTA PANDIT SABHA—*concld.*

| Name of candidate | Name of teacher | Place of *tol.* |
|---|---|---|
| **LAGHU KAUMUDI—*concld*** | | |
| *Second Division.* | | |
| Bandyopadhyaya, Keshavchandra ... | Pandit Sukritiswar Kavyatirtha ... | 237, Bakulbagan, Bhawanipur, Calcutta |
| " Kshitischandra ... | " Jamininath Smritibhusan ... | Golakhali, Pabna. |
| Basu, Jaharlal ... | " Kulachandra Siromani ... | Uttarpara, Hooghly |
| Bhattacharyya, Basudev ... | " Dwarakanath Nyayasastri ... | 6-22, Kevalkrisna Sur Street, Calcutta |
| " Kalinarayan ... | " Gobindachandra Siddhantaratna ... | 16, Paikpara Road, 24-Parganas |
| " Ramtaran ... | " Priyanath Tarkatirtha ... | Kasipur, 24-Parganas |
| Chakravarty, Ganeschandra .. | " Gobindachandra Siddhantaratna ... | Paikpara Road, 24-Parganas. |
| Chaturvedi, Ramkriti ... | " Raghuvir Trivedi . | Bisuddhananda Vidyalaya, Calcutta. |
| Chaudhury, Kalikanta .. | " Priyanath Tarkatirtha .. | Kasipur, 24-Parganas |
| Ghosh, Murarimohun ... | " Teknath Misra ... | Shivakumar Bhavan, Calcutta. |
| Jha, Gangadhar ... | " Biswanath Thakur .. | Bisuddhananda Vidyalaya, Calcutta |
| " Madhukar | " Devananda Jha . | ditto. |
| " Muniswar ... | " Krishnachandra Jha . | ditto. |
| " Radhakanta .. | " Yogi Jha Vyakarantirtha .. | ditto |
| " Umakanta . | " ditto . | ditto |
| Mazumdar, Kishoribhusan ... | " Teknath Misra ... | Shivakumar Bhavan, Calcutta |
| Misra, Mahedwarprasad ... | " Brajabhusan Misra .. | ditto |
| " Nandalal | " Muralidhar Misra . | ditto. |
| " Ramapati .. | " Siddhinath Misra .. | ditto |
| " Ramsurat . | " Saradaprasad Misra ... | ditto. |
| " [illegible] .. | " ditto .. | ditto |
| Nandy, Premananda ... | " Haridhan Kavya Vyakaranatirtha ... | 68, Sutrapur Road, Dacca |
| Ojha, Narasinha Datta ... | " Saradaprasad Misra | Shivakumar Bhaban, Calcutta |
| Pandeya, Badiriprasad ... | " Muralidhar Misra ... | ditto |
| " Lalliprasad ... | " Brajabhusan Misra ... | ditto |
| Pathak, Mathuraprasad ... | " Chandrikadutta Misra ... | ditto |
| Puranik, Sankarsarma ... | " ditto ... | ditto |
| Sarma, Badiriprasad ... | " Raghuvir Trivedi . | Visuddhananda Vidyalaya, Calcutta |
| " Balakrisna ... | Mahamahopadhyaya Jaydeb Misra ... | Sakshi Vinayak, Benares. |
| " Baidyanath ... | Pandit Muraridhar Misra ... | Shivakumar Bhavan, Calcutta. |
| " Bhagavandatta ... | " Hanumandatta Kavyatirtha . | 6, Mallick Street, Calcutta |
| " Jayram ... | " ditto ... | ditto |
| " Mahadeo | " Umapati Trivedi ... | 2, Mitra Lane, Calcutta |
| " Madanlal ... | " Yogiyha Vyakarantirtha .. | Visuddhananda Vidyalaya, Calcutta |
| " Madhav ... | " ditto | ditto |
| Tewari, Shivaprasad .. | " Hanumandatta Kavyatirtha . | 6, Mallick Street, Calcutta |
| Tripathi, Badirinarayan .. | " Brajabhusan Misra ... | Shibakumarbhavan, Calcutta |
| " Jagannath ... | " Mahavirprasad Misra ... | 81 1-2, Upper Chitpur Road, Calcutta |
| " Kedarnath ... | " Teknath Misra ... | ditto |
| " Shibchandra ... | " Sakalnarayan Sarma ... | Sanskrit College, Calcutta |
| " Rameshhasan . | " Brajabhusan Misra .. | Shivakumarbhavan, Calcutta |
| Yoshi, Ramanarayan ... | " Hanumandatta Kavyatirtha .. | 6, Mallick Street, Calcutta |
| **SARASWAT** | | |
| *First Division.* | | |
| Bhattacharyya, Mokhodacharan ... | Pandit Jyotiprasad Veda Kavyaratna ... | 42-1, Balaram De Street, Calcutta. |
| *Second Division.* | | |
| Bhattacharyya, Gopalchandra .. | Pandit Pramadacharan Kaviratna ... | 10, Serpentine Lane, Calcutta |
| Das, Baidyanath ... | " Umapati Trivedi .. | 2, Mitra Lane, Calcutta |
| " Tribhangamurari ... | " Shivaram Kavyatirtha ... | Aklaki, Hooghly. |
| Jha, Lakshmikanta ... | " Devananda Jha ... | Bisuddhananda Vidyalaya, Calcutta. |
| " Tulakrishna .. | " Krishnachandra Jha ... | ditto. |
| Misra, Jamunaprasad ... | " Umapati Trivedi ... | 2, Mitra Lane, Calcutta |
| **CHANDRIKA.** | | |
| *First Division* | | |
| Pandeya, Basudev ... | Pandit Raghuvir Trivedi ... | Bisuddhananda Vidyalaya, Calcutta. |
| " Shyamsundar ... | " ditto. ... | ditto. |

## CALCUTTA CENTRE.

| Name of candidate | Name of teacher. | Place of *tol*. |
|---|---|---|
| | **SARASWAT CHANDRIKA** | |
| | *Second Division* | |
| Jha, Parameswar .. | Pandit Yogi Jha Vyakarantirtha ... | Bisuddhananda Vidyalaya, Calcutta |
| Misra, Haranarayan .. | " Raghuvir Trivedi .. | ditto. |
| " Jadunandan ... | " Harihar Misra | Seth Ganapati Vidyalaya, Ranchi. |
| " Kameswar ... | " Ramadhyan Misra ... | Kachchara, Gaya |
| " Kuverdatta ... | " Harihar Misra, Kavyatirtha ... | Ranchi. |
| " Nathuni .. | " ditto ... | ditto. |
| Pandeya, Ambikadatta ... | " Dhakkanath Misra ... | Mokama, Patna |
| Pathak, Mahavali Prasad ... | " Raghuvir Trivedi ... | Bisuddhananda Vidyalaya, Calcutta. |
| " Pantharopan ... | " Vidyadhar Misra ... | Madhupur, Santal Parganas. |
| Prasad, Ramchandra ... | " Mathuranath Pandeya ... | Sanskrit Bhavan, Patna |
| Sarma, Damodar ... | " Chandrasekhar Sarma ... | Lakshmisarai, Monghyr |
| " Ramakumar .. | " Raghuvir Trivedi ... | 2, Mitra Lane, Calcutta |
| Tripathi, Ramtahal .. | " Hanumandatta Joshi ... | 6, Mallick Street, Calcutta |
| | **KAVYA** | |
| | *First Division.* | |
| Biswas, Surendranath .. | Pandit Surendranath Sastri . | 7, Bhim Ghosh Lane, Calcutta |
| Bhattacharyya, Brahmananda .. | " Sitanath Siddhantabagisa .. | 81, Raja Navakrisna Street, Calcutta |
| Chakravarty, Basantakumar ... | " Priyanath Tarkatirtha ... | Kasipur, 24-Parganas |
| " Ramkrisna ... | " Upendramohan Kavya Sankhyatirtha | 12, Harikrishna Set Lane, Kasipur, 24-Parganas. |
| Chattopadhyay, Nanigopal .. | " Matilal Smrititirtha ... | Maniari, Howrah |
| De, Manasakumar ... | " Pratapchandra Kavya Vyakaran Smrititirtha ... | 53, Raja Navakrisna Street, Calcutta. |
| Gupta, Mahadevprasad ... | " Kasinath Ji .. | Natalea, Mirzapur. |
| Mukhopadhyay, Gopikrisna ... | " Surendranath Kavya Smrititirtha ... | 38-1, Ramtanu Bose Lane, Calcutta |
| Sarma, Kedarnath ... | Mahamahopadhyay Ramanathanath Tarkabhusan .. | Khalishpura, Benares |
| " Madanmohan ... | Pandit Muraridhar Jha ... | Ramkathra, Benares. |
| | *Second Division.* | |
| Acharyya, Ekkaricharan .. | Pandit Mrityunjay Vidyabhusan ... | Basudevpur, Hooghly. |
| Bhattacharyya, Birajacharan ... | " Ishanchandra Vidyalankar .. | Sitalatala, Kasipur, 24-Parganas |
| " Gobindachandra ... | " Dasarathi Smrititirtha ... | Dwarhatta, Hooghly. |
| " Nareschandra ... | " Kiranmohan Sarkar Kavyatritha, B A | Gabtali, Dacca. |
| " Sasisekhar ... | " Haridas Siddhantabagis ... | Nakipur, Khulna |
| Bisharad, Anantamohan ... | " Pratapchandra Kavya Smrititirtha ... | 53, Raja Navakrisina Street-Calcutta |
| Chakravarty, Bhavataran .. | " Narendranath Panchatirtha ... | 87, Amherst Street, Calcutta. |
| " Bhupendranath ... | " Sibaram Kavyatirtha ... | Aklakhi, Hooghly |
| " Dukhharan ... | " Upendramohan Kavya Sankhyatirtha | 12, Harikrishna Set Lane, Kasipur, 24-Parganas. |
| " Girindrachandra ... | " Nilmani Sastrasagar ... | 75-2, Masjidbari Street, Calcutta |
| " Harendrakumar ... | " Ramgopal Smritiratna ... | Korarbagan, Howrah. |
| " Kiranchandra ... | " Sasikumar Tarkatirtha ... | Gabkhan, Barisal. |
| " Nilkanta ... | " Nityagopal Panchatirtha ... | Ballygunge, Calcutta |
| Chattopadhyaya, Abhayapada ... | " Prabhakar Kavya Smrithi Mimansatirtha | 26, Tagore Castle Street. Calcutta. |
| " Nalinikanta, B.A ... | " Brajendranath Smrititirtha ... | Mahespur, Jessore |
| Chaudhuri, Harendrakumar .. | Private | |
| " Matilal ... | Pandit Priyanath Tarkatirtha ... | Kasipur, 24-Parganas. |
| Das, Bhadreswar ... | " Narayanchandra Kavyaratna ... | Ugardaha, Hooghly |
| De, Indrakumar ... | " Jogendranath Tarkatirtha ... | Kasipur, 24 Parganas. |
| Devi, Srimati Panna ... | " Surendramohan Vedantatirtha ... | 8-2, Mahamaya Lane, Kalighat, Calcutta. |
| " Srimati Renu ... | " ditto ... | ditto. |
| Dwivedi, Ramsankar ... | " Rajmaniji ... | Burehnath, Mirzapore. |
| Gangopadhyaya, Batakrisna ... | " Purusbottama Kavyatirtha ... | Srirampur, Hooghly. |
| " Manindrakumar ... | " Haripada Smrititirtha ... | Mulajore, 24-Parganas |
| Ghosh, Saratchandra ... | " Priyanath Tarkatirtha ... | Kasipur, ditto. |
| Ghosal, Girijaprasanna . | " Nishikanta Kavyatirtha ... | Ariadaha, ditto. |
| Goswami, Jitendranath ... | " Abhibhusan Kavyatirtha ... | Paikpara, ditto |
| Gupta, Binaybhushan Das ... | " Nepalchandra Kavyatirtha ... | Kalia, Jessore. |
| " Chittaranjan Sen ... | " Surendranath Kavya Smrititirtha ... | 38-1, Ramtanu Bose Lane Calcutta |
| " Harakumar ... | " Bimalacharan Tarkatirtha ... | 8, Raibagan Street, Calcutta. |
| " Indubhusan ... | " Dasarathi Smrititirtha ... | Dwarhatta, Hooghly. |

## CALCUTTA PANDIT SABHA—*contd.*

| Name of candidate | | Name of teacher | | Place of *tol* |
|---|---|---|---|---|
| | | **KAVYA.** | | |
| | | *Second Division* | | |
| Haldar, Hiralal | .. | Pandit Dasarathi Smrititirtha | . | Dwarhatta, Hooghly. |
| Hazra, Batakrishna | ... | Private | | |
| Jha, Chedi | . | Pandit Taracharan Bhattacharyya | ... | Tekmari S. College, Benares. |
| Mazumdar, Ambikacharan | ... | ,, Bamamali Vidyaratna | .. | Pathura Patty, Kalighat, Calcutta |
| Misra, Kamalaprasad | ... | ,, Gaurilal Misra | ... | Tikari, Gaya |
| Mitra, Sitalcharan | ... | ,, Jnanadacharan Chattopadhyaya | . | Gopalnagar, Midnapore |
| Mukhopadhyaya, Gangadhar | ... | ,, Haripada Smrititirtha | | Molajar, 24 Parganas |
| ,, Bhavaprasad | .. | ,, Srikrishna Siddhantabagisa | ... | Chatra, Hooghly. |
| Panda, Ramlochan | ... | ,, Sasadhar Vidyaratna | . | Ballavpur, Hooghly. |
| ,, Sasadhar | .. | ,, Narendranath Panchatirtha | ... | 87, Amherst Street, Calcutta |
| Pandeya, Lakshmiprasad | .. | ,, Vidyadhar Misra | .. | Madhupur, Santal Parganas |
| ,, Udaybat | . | ,, Rajmani Ji | . | Burchnath, Mirzapur |
| Pathak, Annadaprasad | . | ,, Surendranath Smrititirtha | .. | 38 1, Ramtanu Bose Lane, Calcutta |
| ,, Digindranath | | ,, Bidhubhushan Kavyatirtha | ... | Bathnajani, Mymensingh |
| Sarma, Kisborikanta | .. | ,, Raghuvir Trivedi | . | Bisuddhananda Vidyalaya, Calcutta |
| ,, Liladhar | .. | ,, Mangalananda Sarma | .. | 55, Sukea's Street, Calcutta |
| Sinha Jnanananda | | ,, Lakshmikanta Sankhyatirtha | . | 23, Rupnarayan Nandan Lane, Bhawanipur, Calcutta |
| Ukil, Hariprasad | .. | ,, Prafullakumar Tattwanidhi | | 27, Gobinda Ghoshal Lane, Bhawanipur, Calcutta |
| | | **SMRITI** | | |
| | | *First Division* | | |
| Bhattacharyya, Ramchandra | .. | Pandit Krishnacharan Tarkalankar | . | Bisuddhananda Vidyalaya, Calcutta |
| | | *Second Division* | | |
| Bandyopadhyaya, Bibhutibhusan | .. | Pandit Akshaykumar Smrititirtha | . | 31-2, Nayanchand Dutta Street, Calcutta |
| Bhattacharyya, Ashwinikanta | .. | ,, Narendranath Panchatirtha | ... | 87, Amherst Street, Calcutta |
| ,, Bhaveschandra | .. | ,, Nibaranchandra Tarka Smrititirtha | ... | Mulajore Sanskrit College, 24 Parganas |
| ,, Haritaran | . | ,, Krishnacharan Tarkalankar | ... | Bisuddhananda Vidyalaya, Calcutta |
| ,, Manindranath | ... | ,, Anathbandhu Siddhantabagisa | . | Sanskrit College, Calcutta |
| ,, Nagendranath | .. | ,, Ramchandra Smriti Kavyatirtha | ... | 29, Haralal Das Lane, Calcutta |
| Chakravarty, Ashutosh | ... | ,, Amritahari Smrititirtha | ... | Belpukur, Nadia |
| ,, Devendranath | . | ,, Narendranath Panchatirtha | . | 87, Amherst Street, Calcutta |
| ,, Satischandra | ... | ,, Ashutosh Smriratna | ... | 109, Baranasi Ghosh Street, Calcutta |
| ,, Surendranath | ... | ,, Devakrishna Vedantatirtha | | 1, Madan Mitra Lane, Calcutta |
| Mahapatra, Godavari | | Private | | |
| | | **SANKHYA** | | |
| | | *Second Division* | | |
| Bhattacharyya, Dasarathi | ... | Pandit Kalicharan Smriti Purantirtha | ... | Agarpara, 24-Parganas |
| ,, Devendranath | ... | ,, Ramchandra Shastri | ... | 12, Sitanath Road, Calcutta |
| ,, Lahtanga | ... | ,, Srijib Bhattacharyya, M A. | ... | Bhatpara, 24-Parganas. |
| ,, Nagendranath | ... | ,, Narendranath Panchatirtha | ... | 87, Amherst Street, Calcutta. |
| Goswami, Atulkrishna | ... | ,, Brajalal Goswami | ... | Chaitanya Chatuspathi, Navadwip, Nadia. |
| Mahapatra, Nilkanta | .. | Private | | |
| Misra, Gobindachandra | ... | Pandit Umacharan Bhattacharyya | ... | Dasaswamedha, Benares |
| Mukhopadhyaya, Kalikinkar | ... | ,, Srijeb Nyayatirtha, M A. | ... | Bhatpara, 24-Parganas |
| ,, Subodhchandra | ... | ,, Akhoykumar Shastri | ... | 6, Goabagan Street, Calcutta |
| Sastri, Y Nagesha | ... | Private. | | |
| Sen, Sachindralal | ... | Pandit Ashutosh Kavyatirtha | ... | Khalisakota, Barisal. |
| | | **VEDANTA.** | | |
| | | *First Division* | | |
| Bhattacharyya, Ajitnath | ... | M M. Durgacharan Sankhya-Vedantatirtha | | Bhawanipur, Calcutta |

## CALCUTTA PANDIT SABHA—*contd.*

| Name of candidate. | Name of teacher | Place of tol |
|---|---|---|
| | **VEDANTA—*concld*** | |
| | ***Second Division*** | |
| Bandyopadhyaya, Saileswar | Pandit Dwarkanath Vidyavinode | Champdani, Hooghly |
| Bhattacharyya, Ashutosh | " Gaursundar Bhagavatdarshanacharyya | 176, Upper Chitpur Road, Calcutta |
| " Anantakumar | " Upendramohan Kavya-Sankhyatirtha | 12, Harikrishna Set Lane, Kasipu 24-Parganas |
| " Bhabanibhusan | " Devakrishna Vedantatirtha | 1, Madan Mitra Lane, Calcutta |
| " Biswanath | " Gangacharan Vedanta-Vidyasagar | Kengragachi, Khulna. |
| " Kasiswar | M M Durgacharan Sankhya-Vedantatirtha | Bhawanipur, Calcutta. |
| " Nagendranath | Pandit Krisnacharan Tarkalankar | Visuddhyananda Vidyalaya, Calcutta |
| " Surendrachandra | Private | |
| Chakravarty, Kalipada | Pandit Matilal Smritiratna | Andulmauri, Howrah |
| De, Harendranath | " Jogendranath Tarkatirtha | Kasipur, 24-Parganas |
| Devi, Srimati Radhalata | " Krishna Prasanna Tarkabagisa | 5-B, Radhakantaji Street, Calcutta |
| Ghosal, Padmalochan | " Jogendranath Tarkatirtha | Sanskrit College, Calcutta |
| Goswami, Manoranjan | " ditto | ditto. |
| Gupta, Nagendranath Das | M M Gananath Sen | 94, Grey Street, Calcutta. |
| Ray, Jaygopal | Pandit Abhibhusan Kavyatirtha | Paikpara, 24-Parganas |
| Smrititirtha, Surendrachandra | " Niharanchandra Tarkatirtha | Barahanagar, 24-Parganas |
| " Thaneswar | " Mrityunjay Smrititirtha | Mrityunjay Chatuspathi, Belpukur |
| | **MIMANSA** | |
| | ***First Division*** | |
| Bhattacharyya, Kulesnath | Pandit Mrityunjay Smrititirtha | Mrityunjay Chatuspathi, Belpukur Nadia |
| | ***Second Division*** | |
| Acharyya, Jatindranath | Pandit Narayanchandra Smrititirtha | Bhatpara, 24-Parganas |
| Bandyopadhyaya, Bimalananda | " ditto | ditto |
| Bhagavati, Kamalakanta | " Mrityunjay Smrititirtha | Mrityunjay Chatuspathi, Belpukur Nadia |
| Bhattacharyya, Dhirendranath | " Deviprasanna Smritibhushan | Belpukur, Nadia |
| " Ramaprasad | " Sitikanta Vachaspati | Sanskrit College, Calcutta |
| " Suryyakanta | " Narayanchandra Smrititirtha | Bhatpara, 24 Parganas |
| Misra, Dukhamochan | " Devananda Jha | Visuddhananda Vidyalaya, Calcutta |
| Sankhyatirtha, Upendranath | " Jogendranath Tarkatirtha | Sanskrit College, Calcutta |
| Sarma, Binayaka | " Madhab Sastri Bhandari | Marwari Sanskrit Pathshala Benares |
| | **UPANISHAD.** | |
| | ***Second Division.*** | |
| Bhattacharyya, Rajkumar | Pandit Priyanath Tarkatirtha | Kasipur, 24 Parganas |
| Chakravarty, Harendranath | " Dwarakanath Nyayasastri | 6-2, Kevalkrisna Sur Street Calcutta |
| Kavyatirtha, Ramdhan | " Surendranath Sastri | 7, Bhim Ghosh Lane, Calcutta. |
| | **PURAN** | |
| | ***Second Division.*** | |
| Bhattacharyya, Amulyacharan | Pandit Ramgopal Smritiratna | Korarbagan, Howrah |
| " Kalikumar | " Priyanath Tarkatirtha | Kasipur, 24 Parganas. |
| " Matilal | " Dwarakanath Vidyavinode | Champdani, Hooghly |
| " Ramhari | " Devakrisna Vedantatirtha | 1, Madan Mitra Lane, Calcutta. |
| " Vanamali | " Matilal Kavyatirtha | Champdani, Hooghly |
| Chakravarty, Abanibhusan | " Matilal Smritiratna | Andulmauri, Howrah. |
| " Ramprasad Thakur | " Kalicharan Smriti Purantirtha | Agarpara, 24-Parganas |
| " Sasadhar | " Brajendranath Smrititirtha | Maheshpur, Jessore. |
| Goswami, Hareram | " Devakrisna Vedantatirtha | 1, Madan Mitra Lane, Calcutta. |
| Gupta, Gopeswar Sen | " ditto | ditto. |
| Jha, Bighnes | " Biswanath Thakur | Visuddhananda Vidyalaya, Calcutta |
| " Bireswar | " Krisnachandra Jha | ditto |
| " Jaygobinda | " Yogi Jha Vyakaranatirtha | ditto. |
| " Jaynath | " ditto | ditto. |
| Kavyatirtha, Gopalchandra | " Surendranath Shastri | 7, Bhim Ghosh Lane, Calcutta. |
| " Kshetradas, B.A. | " Rajanikanta Kavya Puranatirtha | Behala, 24-Parganas. |

## CALCUTTA PANDIT SABHA—*contd.*

| Name of candidate | Name of teacher | Place of *tol* |
|---|---|---|
| | **PURAN—*concld*** | |
| | ***Second Division*** | |
| Misra, Chandrasekhar | Pandit Krisnachandra Jha | Bisuddhananda Vidyalaya, Calcutta |
| " Jugeswar | " ditto | ditto |
| " Prasannakumar | " Yogi Jha Vyakarantirtha | ditto |
| " Shivakumar | " Brajabhusan Misra | Shivakumarbhavan, Calcutta |
| Mukhopadhyaya, Nalinchandra | " Aswinikumar Vidyavinode | 11-4, Dhakuria Road, Calcutta |
| Pandeya, Binayakdatta | " Brajabhushan Misra | Shivakumarbhavan, Calcutta |
| Pathak, Lakshminath | " Chandrikadatta Misra | ditto. |
| Tripathi, Brigunath | " ditto | ditto |
| Trivedi, Rammares | " Raghunath Trivedi | Madhob Misra Pathsala, Howrah |
| | **SADHARAN DARSAN** | |
| | ***Second Division*** | |
| Das, Navadwipchandra | Pandit Ramkantha Tarkatirtha | Baishnab Darsan Vidyalay, Navadwip |
| | **JYOTISH** | |
| | ***First Division*** | |
| Bhattacharyya, Nakuleswar | Pandit Baradacharan Jyotishsekhar | 42-1, Balaram De Street, Calcutta |
| Jha, Muktinath | " Krisnachandra Jha | Bisuddhananda Vidyalaya, Calcutta |
| Kavyatirtha, Mumindranath, B A | " Ramdev Smrititirtha | 29, Badurbagan Street, Calcutta |
| Yoshi, Hanumandatta | " Krisnachandra Jha | Bisuddhananda Vidyalaya, Calcutta |
| | ***Second Division*** | |
| Das, Priyanath | Pandit Ramratna Vedantaratna | Chandannagar, Hooghly. |
| Goswami, Brajaranjan | " ditto | ditto. |
| Kapta, Krishnacharyya | Mahamahopadhyaya Muralydhar Jha | Queens College, Benares |
| Misra, Bhrigu | Pandit Krisnachandra Jha | Bisuddhananda Vidyalaya, Calcutta |
| " Nrisingha | " ditto | ditto. |
| Pathak, Dineswar | " ditto | ditto |
| | **NAVYA NYAYA** | |
| | ***First Division*** | |
| Gangopadhyaya, Nangopal | Pandit Upendranath Tarkatirtha | Kadamtala, Chinsura, Hooghly |
| | ***Second Division*** | |
| Bhattacharyya, Anantakumar | Pandit Anantakumar Tarkatirtha and Hari das Vidyaratna | Uttarpara, Hooghly. |
| " Badyanath | " Brajendranath Smrititirtha | Mahespur, Jessore |
| " Rajendranath | " Amarendramohan Tarkatirtha | 8-2, Mahamaya Lane, Kalighat, Calcutta |
| " Sasimohan | " Kunjabihari Tarkasiddhanta | Sanskrit College, Calcutta |
| " Tarapada | " ditto | ditto. |
| Pandey, Sibnandan | " Chandicharan Tarkatirtha | Sibkumarbhavan, Calcutta. |
| Vedantatirtha, Narendrachandra, B A | " Rameschandra Tarkatirtha | Saktiasram, Dacca |
| | **JAIN NYAYA (DIGAMBARA)** | |
| | ***First Division*** | |
| Jain, Bimaldas | Pandit Ambadas Shastri | Bhadaunighat, Sibala, Benares |
| | **SAMAVEDA** | |
| | ***First Division.*** | |
| Acharyya, Sachchidananda | Pandit Haripada Smrititirtha | Mulajore Sanskrit College, 24-Parganas |
| Bandyopadhyaya, Balaicharan | " Dwarakanath Vidyavinode | Chatra, Hooghly. |
| " Bireswar | " Devananda Jha | Bisuddhananda Vidyalaya, Calcutta |
| " Surendranath | " Kulachandra Siromani | Uttarpara, Hooghly. |

## CALCUTTA PANDIT SABHA—*concld.*

| Name of candidate | Name of teacher | Place of *tol* |
|---|---|---|
| | **SAMAVEDA**—*concld* | |
| | ***First Division*** | |
| Bhattacharyya, Krisnadhan | Pandit Rohinikumar Kavyaratna | Jujarsa, Howrah. |
| " Narendranath | " Priyanath Tarkatirtha | Kasipur, 24-Parganas |
| " Ramchandra | " Gobindachandra Siddhantaratna | 16, Parkpara Road, 24-Parganas |
| " Tarapada | " Chandicharan Tarkatirtha | Shibakumarbhaban, Calcutta |
| Burma, Mahendranath Deb | " Priyanath Tarkatirtha | Kasipur, 24 Parganas |
| Chakravarty, Janakinath | " Bipinbihari Vedantabhusan | Nakuleswartala, Kalighat, Calcutta. |
| " Khagendranath | " Haripada Smrititirtha | Mulajore Sanskrit College, 24-Parganas |
| Chaudhuri, Monoranjan | " Jogendranath Tarkatirtha | Kasipur, 24-Parganas |
| Mukhopadhyaya, Kamalendusekhar | " Kishorimohan Kavya-Smrititirtha | 29-1, Bajeshpur Road, Howrah |
| Ray, Nishakar | " Bireswar Kavyatirtha | Mukajore Sanskrit College, 24-Parganas. |
| Sarbabhauma, Ramchandra | " Bibhutibhusan Kavyatirtha | 82, Beadon Street, Calcutta |
| Sastri, Raghunath | " Biswanath Thakur | Bisuddhananda Vidyalaya, Calcutta |
| | ***Second Division*** | |
| Bandyopadhyaya, Basantakumar | Pandit Nityagopal Panchatirtha | Ballygunge, Calcutta |
| Bhattacharyya, Ardhendusekar | " Rajanikanta Kavya Purantirtha | Behala, 24-Parganas. |
| " Kameswar | " Ramratna Vedantatirtha | Chandernagar, Hooghly |
| Brahmachari, Banawarilal | " Lalitkumar Sankhyatirtha | Pangsa, Faridpur |
| Chakravarty, Nrisingha Prasad | " Dwarkanath Vidyavinode | Champdani, Hooghly |
| " Pashupati | " Rajkumar Vedatirtha | Kaikala, Howrah |
| Chattopadhyaya, Jatindranath | " ditto | ditto |
| " Priyanath | " Devendranath Vidyaratna | Mahes, Hooghly |
| Jha, Golab | " Biswanath Thakur | Visuddhananda Vidyalaya, Calcutta |
| " Murardhar | " ditto | ditto |
| " Nageswar | " Devananda Jha | ditto |
| Misra, Kamalakanta | " ditto | ditto |
| " Srinath | " Bahuballav Shastri | Sanskrit College, Calcutta. |
| Mukhopadhyaya, Bipulaksha | " Ramchandra Shastri | 12, Sitanath Road, Calcutta |
| " Tarapada | " Bibhutibhusan Kavyatirtha | 82, Beadon Street, Calcutta |
| Panda, Haripada | " Brajanath Kavya Vedantatirtha | Serampur, Hooghly |
| Pandeya, Baidyanath | " Yogi Jha Vyakaranatirtha | Visuddhananda Vidyalaya, Calcutta |
| Ray, Chaturbhuj | " Biswanath Thakur | ditto |
| | **SUKLA YAJURVEDA** | |
| | ***Second Division*** | |
| Chakravarty, Kalipada | Pandit Devananda Jha | Visuddhananda Vidyalaya, Calcutta. |
| Jha, Ayodhyanath | " ditto | ditto. |
| " Bhupnandan | " ditto | ditto |
| " Jatadhar | " Biswanath Thakur | ditto. |
| Misra, Mahes | " Brajabhusan Misra | ditto |
| Pandeya, Ramkrisna | " Manisharan Sukul | Jahanavad, Gaya. |
| Thakur, Jagadish | " Biswanath Thakur | Visuddhananda Vidyalaya, Calcutta. |
| Tripathi, Ramekval | " Siddhinath Misra | Shivakumar Bhavan, Calcutta. |
| Vajpeyi, Baidyanath | " ditto | ditto |
| | **BAISHNAV DARSAN** | |
| | ***Second Division.*** | |
| Bhattacharyya, Ramendrasundar | Pandit Gaursundar Bhagavatdarsancharyya | 176, Upper Chitpur Road, Calcutta. |
| | **PALISUTRA PITAK.** | |
| | ***First Division*** | |
| Bhattacharyya, Kalipada | Pandit Dwarkanath Nyayasastri | 6-2, Kebalkrisna Sur Street, Calcutta. |
| Mandal, Bishnuchandra, B.A. | " Rajanikanta Kavya Purantirtha | Behala, 24-Parganas |
| | ***Second Division.*** | |
| Vyakarantirtha, Sridhar | Pandit Dwarkanath Nyayasastri | 6-2, Kebalkrisna Sur Street, Calcutta. |

## PARIKSHA SABHA, BHATPARA.

### LAGHU KAUMUDI

***First Division.***

## PARIKSHA SABHA, BHATPARA—*contd.*

| Name of candidate | Name of teacher | Place of *tol* |
|---|---|---|
| | **SARASWAT CHANDRIKA** | |
| | ***First Division*** | |
| Kabi, Kalidas | Pandit Purandas Kavya Sankhyatirtha | 15, Mohanbagan Lane, Calcutta |
| | **KALAP** | |
| | ***Second Division*** | |
| Bhattacharyya, Phanindranath | Pandit Aswinikumar Smritibhusan | Pratappur, Chinsura, Hooghly. |
| Chakravarti, Anantakumar Thakur | " ditto | ditto |
| | **MUGDHABODHA** | |
| | ***First Division*** | |
| Sarma, Sailendra | Pandit Purandas Sankhyatirtha | 15, Mohanbagan Lane, Calcutta. |
| | ***Second Division*** | |
| Bhattacharyya, Biswanath | Pandit Upendranath Tarkatirtha | Chinsura, Hooghly |
| " Lakshmikanta | " Kamalkrishna Smrititirtha | Bhatpara, 24 Parganas |
| Chattopadhyay, Dwijapada | " Upendranath Tarkatirtha | Chinsura, Hooghly |
| | **SUPADMA.** | |
| | ***First Division*** | |
| Pal, Nimaidas | Pandit Kebalkrishna Kavyatirtha | Bhatpara, 24-Parganas |
| | **KAVYA** | |
| | ***First Division*** | |
| Mukhopadhyay, Ajitkumar | Pandit Kamalkrishna Smrititirtha | Bhatpara, 24-Parganas. |
| | ***Second Division*** | |
| Bhattacharyya, Bhabatosh | Pandit Kamalkrishna Smritirtha | Bhatpara, 24 Parganas |
| " Dinabandhu | " Upendranath Tarkatirtha | Chinsura, Hooghly |
| " Parbaticharan | " Sitanath Vedantasastri | ditto. |
| Panda, Mahadeb | " Panchanan Sastri | Bhatpara, 24-Parganas |
| | **SMRITI (*ka*)** | |
| | ***Second Division*** | |
| Kavya Sankhyatirtha, Jagadindranath | Pandit Upendranath Tarkatirtha | Chinsura, Hooghly |
| | **VEDANTA (*ka*)** | |
| | ***Second Division*** | |
| Bhattacharyya, Anirudhya | Pandit Manmathanath Tarkatirtha | Bhubaneswari Chatuspathi, Bhatpara, 24 Parganas |
| " Kalyay | " Ramsahay Vedantasastri | Kantalpara, Naihati, 24-Parganas |
| | **VEDANTA (*kha*)** | |
| | ***Second Division*** | |
| Bhattacharyya, Balaram | Pandit Panchanan Tarkatirtha | Bhatpara, 24-Parganas. |
| | **SANKHYA.** | |
| | ***Second Division*** | |
| Kavyatirtha, Pasupati | Pandit Basudeb Smrititirtha | Bardyapur, Burdwan. |
| Sarma, Jadabeswar | " Ashutosh Vidyabhusan | Khalisakota, Barisal |
| | **PURAN.** | |
| | ***Second Division.*** | |
| Chattopadhyaya, Durgaskumar | Pandit Upendranath Tarkatirtha | Chinsura, Hooghly |

## PARIKSHA SABHA, BHATPARA—*concld.*

| Name of candidate | | Name of teacher | | Place of *tol* |
|---|---|---|---|---|
| | | **SAMA VEDA** | | |
| | | *Second Division* | | |
| Bhattacharyya, Bholanath | ... | Pandit Ramalkrishna Smrititirtha | . | Bhatpara, 24-Parganas. |
| " Haranath | ... | " Kaliprasanna Vidyaratna | .. | Santipur, Nadia. |
| " Nanigopal | .. | " Panchanan Shastri | ... | Bhatpara, 24-Parganas |
| Chakravarti, Nagendranath | .. | " Kalicharan Smriti Purantirtha | ... | Agarpara, Kamarhati, 24-Parganas |
| Goswami, Gopiranjan | ... | " Basudeb Smriti Mimansatirtha | ... | Baidyapur, Burdwan. |

## BIBUDHA JANANI SABHA, NABADWIP.

| | | | | |
|---|---|---|---|---|
| | | **LAGHU KAUMUDI.** | | |
| | | *Second Division* | | |
| Bhattacharyya, Upendrachandra | . | Pandit Janakinath Smrititirtha | .. | Dhankati, Faridpur |
| Chattopadhyaya, Sibadatta | ... | " Ramgopal Tarkatirtha | | Nabadwip, Nadia |
| Datta, Nabadwipchandra | . | " Lalitkumar Sankhyatirtha | .. | Pangsa, Faridpur |
| Kavyatirtha, Anandagopal | .. | " Abhibhusan Kavyatirtha | . | Nabadwip, Nadia. |
| Karmakar, Satishchandra | . | " Lalitkumar Sankhyatirtha | . | Pangsa, Faridpur |
| Pramanik, Baidyanath | | " ditto | ... | ditto |
| | | **SARASWAT** | | |
| | | *Second Division* | | |
| Bandyopadhyaya, Jogeswar | ... | Pandit Brajaraj Bhagabatratna | ... | Nabadwip, Nadia. |
| " Lalhari | ... | " Tripathanath Smrititirtha | ... | ditto |
| Bhattacharyya, Manoranjan | ... | " Niranjan Vidyabhusan | | ditto |
| Chakravarti, Harihar | ... | " Atulkrishna Kavyatirtha | .. | ditto. |
| Goswami, Gaurgopal | ... | " ditto | ... | ditto |
| " Syamsundar | ... | " Brajaraj Goswami | ... | ditto |
| Mukhopadhyaya, Deb | ... | " Abinashchandra Nyayaratna | ... | ditto |
| Ray, Herambakanta | ... | " Brajaraj Bhagabatratna | .. | ditto |
| Sarma, Nitai | ... | " Sibnath Tarkatirtha | ... | ditto |
| Singha, Mahendrajit | ... | " Brajaraj Bhagabatratna | ... | ditto |
| | | **CHANDRIKA** | | |
| | | *Second Division* | | |
| Bhattacharyya, Phanibhusan | ... | Pandit Atulkrishna Kavyatirtha | ... | Nabadwip, Nadia |
| Chakravarti, Madhusudan | ... | " Abhibhusan Kavyatirtha | ... | ditto |
| Singha, Parthabir | ... | " Bhabananda Das | ... | ditto |
| " Upendra | ... | " Sibnath Tarkatirtha | ... | ditto |
| | | **HARINAMAMRITA VYAKARAN** | | |
| | | *First Division* | | |
| Bhattacharyya, Bankimbihari | . | Pandit Adwaitadas Pandit | ... | Nabadwip, Nadia |
| Gangopadhyaya, Nabakumar | ... | " Bhabananda Das | ... | ditto. |
| | | *Second Division* | | |
| Baishnab, Nabadwip Chandra Das | ... | Pandit Adwaitadas Pandit | ... | Nabadwip, Nadia. |
| Chakrabarti, Debendrachandra | ... | " Jogeshchandra Smritiratna | ... | ditto. |
| Das, Achyutananda | ... | " Adwaitadas Pandit | ... | ditto. |
| " Madanmohan | ... | " ditto | ... | ditto. |
| Goswami, Gaurgopal | ... | " Brajaraj Bhagabatratna | ... | ditto. |
| " Harendralal | ... | " ditto | ... | ditto. |
| " Jaminimohan | ... | " Sitikantha Smritirtha | ... | ditto. |
| | | **KALAP.** | | |
| | | *Second Division.* | | |
| Debnath, Kumudbandhu | ... | Pandit Bhabananda Das | ... | Nabadwip, Nadia. |
| Goswami, Gopendrakrishna | ... | " Abhibhusan Kavyatirtha | ... | ditto. |
| Sannyal, Abinashchandra | ... | " Ramchandra Kavyatirtha | ... | Tangail, Mymensingh. |

## BIBUDHA JANANI SABHA, NABADWIP.

| Name of candidate | Name of teacher | Place of *tol* |
|---|---|---|
| | **MUGDHABODHA** | |
| | *Second Division* | |
| Bairagya, Gaurdas | Pandit Abhibhusan Kavyatirtha | Paikpara, Kasipur, 24 Parganas |
| Bandyopadhyay, Radhamohan | „ Jatindranath Tarkatirtha | Nabadwip, Nadia |
| „ Sibaprasad | „ Abhibhusan Kavyatirtha | Paikpara, Kasipur, 24 Parganas |
| Bhaduri, Kalipara | „ Atulkrishna Kavyatirtha | Nabadwip, Nadia |
| Bhattacharyya, Bibhutibhusan | „ Atulkrishna Kavyatirtha | ditto |
| „ Krishnanath | „ Prangopal Tarkatirtha | ditto |
| „ Manoranjan | „ Atulkrishna Kavyatirtha | ditto |
| Chakravarti, Manindramohan | „ Sitikantha Smrititirtha | ditto |
| Chattopadhyaya, Gaurmani | „ Sibnath Tarkatirtha | ditto |
| „ Prabodhchandra | „ Srimohan Chudamani | Sarak, Bahirgachi, Nadia |
| Goswami, Abanibhusan | „ Atulkrishna Kavyatirtha | Nabadwip, Nadia |
| „ Gorachand | „ Abhibhusan Kavyatirtha | ditto |
| „ Madhusudan | „ Tripathanath Smrititirtha | ditto |
| „ Prafullachandra | „ Atulkrishna Kavyatirtha | ditto |
| „ Rebatiraman | „ Jogeshchandra Smritiratna | ditto |
| „ Sanatan | „ Tripathanath Smrititirtha | ditto |
| Mallick, Purnachandra | „ Abhibhusan Kavyatirtha | Paikpara, Kasipur, 24 Parganas |
| Mukhopadhyaya, Abanikumar | „ Aswinikumar Kavyatirtha | Pohtapara, Murshidabad |
| „ Brajabihari | „ Tripathanath Smrititirtha | Nabadwip, Nadia |
| Ray, Basantakumar | „ Sitikantha Smrititirtha | ditto |
| „ Ganganarayan | „ Aswinikumar Kavyatirtha | Pohtapara, Murshidabad |
| „ Radhaballabhdatta | „ Bhabananda Das | Nabadwip, Nadia |
| „ [illegible] | „ Abhibhusan Kavyatirtha | Paikpara, Kasipur, 24-Parganas. |
| | **PRAYOG RATNAMALA** | |
| | *Second Division* | |
| Bhattacharyya, Herambanath | Pandit Upendranath Sankhyatirtha | Nabadwip, Nadia |
| „ Sankarnath | „ ditto | ditto |
| Goswami, Balaichand | „ Bhabananda Das | ditto |
| | **KAVYA** | |
| | *Second Division* | |
| Datta, Prankrishna | Pandit Bhabananda Das | Nabadwip, Nadia |
| Goswami, Brajendrakumar | „ ditto | ditto. |
| „ Nandagopal | „ Prangopal Siddhantaratna | ditto |
| Singha, Sudhanna | „ Jatindranath Tarkatirtha | ditto |
| | **NYAYA (*ka*)** | |
| | *Second Division* | |
| Das Sarma, Ramballabh | Mahamahopadhyaya Sitaram Nyayacharyya | Nabadwip, Nadia. |
| Misra, Purusottam | Pandit, Jatindranath Tarkatirtha | ditto |
| Sarma, Kedarnath | „ ditto | ditto |
| Trivedi, Dhaneswardatta | Mahamahopadhyaya Sitaram Nyayacharyya | ditto. |
| Tripathi, Ramdhari | Ditto | ditto |
| | **PURAN** | |
| | *Second Division* | |
| Acharyya, Satischandra | Pandit Tripathanath Kavya Smrititirtha | Nabadwip, Nadia. |
| Chottaraj, Chaitanyacharan | „ Lalitamohan Kaviratna | ditto. |
| Gaswami Jogendrakumar | „ Ramkantha Tarkatirtha | ditto. |
| „ Ramaprasad | „ Abhibhusan Kavyatirtha | ditto |
| „ Rashamaya | „ ditto | ditto |
| Kavyatirtha, Brajadhan | „ Tripathanath Kavya Vyakaran Smrititirtha | ditto. |
| Kavya Smrititirtha, Gaurgopal | „ Prangopal Siddhantaratna | ditto |
| | **VAISHNAB DARSAN** | |
| | *Second Division* | |
| Das, Bhabananda | Pandit Ramkantha Tarkatirtha | Nabadwip, Nadia |
| Gangopadhyaya, Banamali | „ ditto | ditto |
| Goswami, Mohinimohan | „ ditto | ditto |

## BIBUDHA JANANI SABHA, NABADWIP—*concld.*

| Name of candidate | Name of teacher | Place of *tol.* |
|---|---|---|
| | **SAMA VEDA** | |
| | *First Division* | |
| Chakravarti, Harikrishna | Pandit Lahtamohan Kaviratna | Nabadwip, Nadia |
| | *Second Division.* | |
| Chakravarti Radhakanta | Pandit Tripathanath Kavya Vyakaran Smrititirtha | Nabadwip, Nadia. |

## PANDIT SAVA BERHAMPUR.

| | | |
|---|---|---|
| | **LAGHU KAUMUDI** | |
| | *Second Division* | |
| Panda, Byomkesh | Pandit Debendranath Smrititirtha | Dekhuria, Birbhum. |
| | **SARASWAT** | |
| | *Second Division* | |
| Das, Ramaprasad | Pandit Faratkumar Kavya Smrititirtha | Kutubpur, Malda |
| Ghosh, Kshirodechandra | ditto | ditto |
| Nandi, Anilchandra | ditto | ditto |
| Sarkar, Mrityunjoy | ditto | ditto |
| | **SANKSHIPTASAR** | |
| | *Second Division* | |
| Adhikari, Ramanath | Pandit Satyanarayan Tarkachudamani | Kundala, Birbhum |
| Bhattacharyya, Kamakhyanath | " Ramtaran Tarkalankar | Brahmanbara, Birbhum |
| " Nangteswar | " Indranarayan Tarkaratna | Bhahan, Birbhum. |
| " Ramanath | " Batukbhairab Kavya Smrititirtha | Gumta, Birbhum |
| " Sambhunath | " Indranarayan Tarkaratna | Bhahan, Birbhum |
| Misra, Jibankrishna | " Bipinbihari Smrititirtha | Panchthupi, Murshidabad |
| | **MUGDHABODHA** | |
| | *First Division* | |
| Bhattacharyya, Siddas | Pandit Trailokyanath Smritibhusan | Lalgola, Murshidabad |
| Chakravarti, Kalikumar | " Rameshchandra Vedantabisarad | Kandi, Murshidabad |
| | *Second Division* | |
| Bandyopadhyaya, Nirajakshya | Pandit Bipinbihari Smrititirtha | Panchthupi, Murshidabad. |
| Bhattacharyya, Ramanath | " Rasaraj Kavyaratna | Rusora, Murshidabad |
| Chakravarti, Satyakumar | " Rameshchandra Vedantabisarad | Kandi, Murshidabad |
| Chattopadhyaya, Jaydeb | " Bhutnath Vedantasastri | Suri, Birbhum. |
| " Narendranath | " Ramsaran Vidyabagisa | Ghatbandar, Murshidabad. |
| " Tarabrahma | " Tarimcharan Tarkatirtha | Beha, Birbhum |
| Gupta, Gangadhar Sen | " Nanigopal Kavya Vyakarantirtha | Berhampur, Murshidabad. |
| " Kalipada Das | " Bhutnath Vedantasastri | Suri, Birbhum. |
| " Sambhucharan Das | " Pasupati Tarkaratna | Paikar, Birbhum |
| Maitra, Paramananda | " Ramsaran Vidyabagisa | Ghatbandar, Murshidabad. |
| Mazumdar, Tarapada | " Rishibhusan Smrititirtha | Manikyadihi, Kaligunge, Nadia |
| Mukhopadhyaya, Ramendramohan | " Bipinbihari Smrititirtha | Panchthupi, Murshidabad |
| Ray, Gobindacharan | " Rishibhusan Smritiratna | Manikyadihi, Kaligunge, Nadia. |
| Sen, Mrigankasekhar | " Nanigopal Kavya Vyakarantirtha | Berhampur, Murshidabad. |
| | **KAVYA.** | |
| | *Second Division.* | |
| Acharyya, Debendranath | Pandit Krishnaratna Nyayaratna | Kaligram, Malda |
| Bhattacharyya, Baidyanath | " Satkari Kavya Smrititirtha | Bilsa, Birbhum. |
| " Bhupendranath | " Saratkumar Kavya Smrititirtha | Kutubpur, Malda. |
| " Bijaygopal | " Bhutnath Vedantasastri | Suri, Birbhum. |
| " Haripada | " Ramsaran Vidyabagisa | Ghatbandar, Murshidabad |
| " Kanikura | " Satkari Kavya Smrititirtha | Bilsa, Birbhum |
| " Tarakumar | " Sasikumar Vidyabhusan | Berhampur, Murshidabad. |
| Das, Radhikaprasad | " Ramsaran Vidyabagisa | Ghatbandar, ditto. |
| Ghatak, Rambhadra | " Sasikumar Vidyabhusan | Berhampur, ditto |
| Goswami, Krishnabandhu | " Krishnaratna Nyayaratna | Kaligram, Malda. |
| " Radhapada | " Nrityagopal Kavyatirtha | Mahamadpur, Murshidabad |

## PANDIT SABHA BERHAMPUR—*concld.*

| Name of candidate. | Name of teacher. | Place of *tol*. |
|---|---|---|
| | **SMRITI** | |
| | *Second Division* | |
| Bhattacharyya, Sibsankar | Pandit Satkari Smrititirtha | Bilsa, Birbhum |
| Mukhopadhyaya, Anadicharan | " Isanchandra Smritipanchanan | Berhampur, Murshidabad. |
| | **PURAN** | |
| | *Second Division* | |
| Mitra, Phanibhusan | Pandit Saratkumar Kavya Smrititirtha | Kutubpur, Malda. |
| | **SAMA VEDA** | |
| | *Second Division* | |
| Bandyopadhyaya, Pundarikakshya | Pandit Bipinbihari Smrititirtha | Panchthupi, Murshidabad |
| | **MIMANSA.** | |
| | *Second Division* | |
| Bhattacharyya, Bhudebchandra | Pandit Satkari Kavya Smrititirtha | Bilsa, Birbhum. |
| [illegible] Bhujangabhusan | " ditto | ditto |

## VIDYOTSAHINI SABHA, NARAIL.

| | | |
|---|---|---|
| | **KALAP** | |
| | *Second Division.* | |
| Chakravarti, Jaminikanta | Pandit Kedarnath Kavya Vyakarantirtha | Patna, Bardia, Jessore. |
| | **SUPADMA** | |
| | *Second Division* | |
| Bhattacharyya, Anantakumar | Pandit Arunkanta Smrititirtha | Jaypur, Lalagara, Jessore |
| " Chittaranjan | " ditto | ditto. |
| Chakravarti, Dayamaya | " ditto | ditto. |
| | **KAVYA.** | |
| | *First Division* | |
| Bhattacharyya, Syamapada | Pandit Bijaynath Siromoni | Barukhali, Jessore. |
| Pattak, Gurudas | " Girishchandra Tarkatirtha | Itna, Jessore |
| | *Second Division* | |
| Dey, Jyotishchandra | Pandit Girishchandra Tarkatirtha | Itna, Jessore. |
| Ray, Jogendranath | " Mahadeb Vedantabhusan | Kalora, Jessore |
| | **SANKHYA.** | |
| | *Second Division* | |
| Bhattacharyya, Hemantakumar | Pandit Mahadeb Vedantabhusan | Kalora, Jessore. |
| | **PURAN** | |
| | *Second Division.* | |
| Bhattacharyya, Upendranath | Pandit Aswinikumar Smritiratna | Pratappur, Hooghly. |
| | **SMRITI (*Kha*).** | |
| | *First Division.* | |
| Kavyatirtha, Hemendranath | Pandit Debendranath Kavya Smrititirtha | Siddhipasa, Khulna. |

## SARASWAT SAMITI, DAULATPUR.

| Name of candidate | | Name of teacher | | Place of tol. |
|---|---|---|---|---|
| | | **LAGHU KAUMUDI** | | |
| | | *First Division.* | | |
| Bhattacharyya, Srinath | ... | Pandit Ramlal Smrititirtha | ... | Sripurbangram, Khulna. |
| Chakravarti, Kshirodebandhu | ... | " ditto | ... | ditto. |
| | | **KALAP.** | | |
| | | *Second Division* | | |
| Aich, Prabhatchandra | ... | Pandit Satischandra Kavya Smrititirtha | ... | Daibajnahati, Khulna. |
| Biswas, Bhupendranath | ... | " ditto | .. | ditto. |
| De, Khagendranath | ... | " Taranath Nyayatarkatirtha | ... | Sangdia, Solarkola, Khulna |
| Ghosal, Upendranath | ... | " Ramlal Smrititirtha | ... | Sripurbangram, Khulna |
| | | **SUPADMA** | | |
| | | *First Division* | | |
| Chakravarti, Gopalchandra | ... | Pandit Taranath Nyayatarkatirtha | .. | Sangdia, Solarkola, Khulna. |
| Chattopadhyaya, Saradindu | ... | " Nagendranath Kavyatirtha | ... | Mansa, Khulna |
| Sengupta, Satyendranath | ... | " Haricharan Kavyatirtha | ... | Phultala, Khulna. |
| | | *Second Division.* | | |
| Bandyopadhyaya, Kartickchandra | ... | Pandit Birajamohan Kavyatirtha | ... | Dakshinsripur, Khulna |
| Bhattacharyya, Manmathanath | ... | " Kalipada Vyakaranatirtha Purantirtha | | Karapara, Khulna |
| Bishnu, Phanindranath | ... | " Nagendranath Kavyatirtha | ... | Mansa, Khulna |
| Chakravarti, Bijaylal | ... | " ditto | .. | ditto. |
| " Debendranath | ... | " Surendranath Smrititirtha | ... | Bhugilhat, Jessore. |
| " Karunamya | .. | " Kalipada Vyakaran Purantirtha | ... | Karapara, Khulna. |
| " Narayandas | ... | " Taraprasanna Tarkatirtha | ... | Mulghar, Khulna. |
| " Rameshchandra | ... | " Taranath Nyayatarkatirtha | ... | Sangdia, Solarkola, Khulna. |
| " Sailendranath | ... | " ditto | ... | ditto. |
| " Trailokyanath | ... | " Surendranath Smrititirtha | ... | Bhugilhat, Jessore |
| Chattopadhyaya, Kanailal | ... | " Nagendranath Kavyatirtha | ... | Mansa, Khulna. |
| " Kshitishchandra | ... | " Taranath Nyyaatarkatirtha | ... | Sangdia, Solarkola, Khulna. |
| Chaudhury, Haranchandra | ... | " ditto | ... | ditto |
| Das, Banamali | ... | " Sasadhar Smritirtha | ... | Pilgunge, Khulna |
| " Nilkamal | ... | " Surendranath Smrititirtha | ... | Bhugilhat, Jessore |
| Debnath, Ajitkumar | ... | " Kalipada Vyakaran Purantirtha | ... | Karapara, Khulna |
| Gangopadhyaya, Nanigopal | ... | " Taraprasanna Tarkatirtha | ... | Mulghar, Khulna |
| Ghosh, Sachindrakumar | ... | " Nepalchandra Kavyatirtha | ... | Daulatpur, Khulna |
| " Santoshkumar | .. | " Haricharan Kavyatirtha | ... | Phultala, Khulna |
| " Sudhirkumar | ... | " Nagendranath Kavyatirtha | .. | Mansa, Khulna. |
| Mazumdar, Gopalchandra | ... | " Nepalchandra Kavyatirtha | ... | Daulatpur, Khulna |
| Mukhopadhyaya, Tapodhan | ... | " Trailokyanath Smrititirtha | .. | Pratapkati, Rupdia, Jessore. |
| Ray, Binodebihari | ... | " Mahendranath Smrititirtha | ... | Bamagati, Bagerhat, Khulna. |
| Samaddar, Kalicharan | ... | " ditto | ... | ditto. |
| Sen, Binayendranath | ... | " Nagendranath Sastri | ... | Jessore, Jessore |
| Sikdar, Jyotishchandra | ... | " Kalipada Vyakaran Purantirtha | ... | Karapara, Khulna. |
| | | **MUGDHABODHA** | | |
| | | *Second Division* | | |
| Mukhopadhyaya, Kaminikumar | ... | Pandit Jogindrakumar Smrititirtha | ... | Fulhara, Faridpur. |
| | | **KAVYA** | | |
| | | *First Division.* | | |
| Sarkar, Kshitishchandra | ... | Pandit Upendranath Smrititirtha | ... | Daulatpur, Khulna. |
| | | *Second Division.* | | |
| Bhattacharyya, Nirmalchandra | ... | Pandit Nagendranath Sastri | ... | Jessore, Jessore. |
| Biswas, Jatindranath | ... | " Nepalchandra Kavyatirtha | ... | Daulatpur, Khulna. |
| Chakravarti, Gobardhan | ... | " Ramlal Smrititirtha | ... | Sripurbangram, Khulna. |
| Chattopadyaya, Amalkumar | ... | " Nepalchandra Kavyatirtha | ... | Daulatpur, Khulna. |
| Debnath, Murarikrishna | ... | " Kedareswar Kavyatirtha | ... | Nawapara, Pilgunge, Khulna. |
| Mitra, Naliniranjan | ... | " Nepalchandra Kavyatirtha | ... | Daulatpur, Khulna. |
| Rajak, Manibhusan, B.A. | ... | " Akshayendranath Kavyatirtha | ... | Kaheara, Khulna. |

## SARASWAT SAMITI, DAULATPUR—*concld.*

| Name of candidate | | Name of teacher | | Place of *tol* |
|---|---|---|---|---|
| | | **SMRITI (*Ka*)** | | |
| | | *Second Division* | | |
| Bhattacharyya, Amritalal | ... | Pandit Ramlal Smrititirtha | ... | Sripurbangram, Khulna. |
| " Kshetramohan | .. | " ditto | ... | ditto |
| Mukhopadhyaya, Bishnupada | .. | " Ramcharan Kavya Tarkatirtha | ... | Champaful, Khulna. |
| | | **NAYA (*Kha*).** | | |
| | | *Second Division* | | |
| Bhattacharyya, Bhabanicharan | ... | Pandit Taranath Nyayatarkatirtha | ... | Sangdia, Solarkola, Khulna. |
| | | **JYOTISH** | | |
| | | *Second Division* | | |
| Ray, Kalipada | ... | Pandit Upendranath Smrititirtha | ... | Daulatpur, Khulna. |
| | | **SAMA VEDA** | | |
| | | *Second Division.* | | |
| Bhattacharyya, Basudeb | ... | Pandit Jaminikanta Tarkatirtha | ... | Daulatpur, Khulna. |
| Chaudhu[illegible]krishna | .. | " Panchanan Kavya Tarkatirtha | ... | Champaful, Khulna. |
| Kushari, Annadacharan | ... | " Sasadhar Smrititirtha | ... | Pilgunge Khulna. |
| Mukhopadhyaya, Prafullakumar, B A | ... | " Hrishikesh Kavyatirtha | ... | Baraipara, Raipura, Khulna |
| " Suklal | ... | " Satischandra Smriti Kavyatirtha | ... | Daibajuahati, Khulna |
| Nath, Kalikanta | ... | " Kedareswar Kavyatirtha | ... | Nawapara, Pilgunge, Khulna |
| Ray, Kshitindrachandra | ... | " Jogendranath Smriti Sankhyatirtha | | Goalpara, Sripur, Jessore |
| | | **MIMANSA** | | |
| | | *Second Division* | | |
| Bhattacharyya, Narendrakumar | ... | Pandit Ashutosh Smrititirtha | ... | Sangdia, Solarkola, Khulna |
| Kavyatirtha, Basantakumar | ... | " ditto | .. | ditto. |

## BIJAY CENTRE, BURDWAN.

### LAGHU KAUMUDI

*Second Division*

| | | | | |
|---|---|---|---|---|
| Chattopadhyaya, Anadibhusan | ... | Pandit Tarapada Smrititirtha | ... | Sridharpur, Burdwan |
| Chaube, Badrinarayan | ... | " Jadunath Misra | . | Karambag, Deoghar, Santhal Parganas. |
| Deb, Gurusiddha | ... | " Taracharan Bhattacharyya | ... | Tekmani Sanskrit College, Benares |
| Jha, Phekan | ... | " Basudeb Misra Vyakarantirtha | ... | Sokahara, Barauni Junction, Monghyr. |
| Misra, Chandiprasad | ... | " Ramanath Ray | ... | P. N S. College, Jamdaha, Bhagalpur |
| " Dasarath | ... | " Manjilal Misra | ... | Rajgangasthan, Lakuddi, Burdwan |
| Pandeya, Bhubaneswar | ... | " Raghunath Pathak | ... | Bhandaro, Sarwa, Southal Parganas |
| Pathak, Jaydeb | ... | " Basudeb Misra Vyakarantirtha | ... | Sokahara, Barauni Junction Monghyr |
| " Mangal | ... | " ditto | ... | ditto |
| Sarma, Rabedatta | ... | " Taracharan Bhattacharyya | ... | Tekmani Sanskrit College, Benares. |

### SARASWAT CHANDRIKA

*Second Division*

| | | | | |
|---|---|---|---|---|
| Jha, Bralmadeb | ... | Pandit Jagadananda Thakur | ... | Barahiya, Monghyr |
| " Gadadhar | ... | " ditto | ... | ditto |
| " Kapileswar | ... | " Srikrishna Misra | ... | Banadwar, Monghyr. |
| " Ramprapat | ... | " Jagadananda Thakur | ... | Barahiya, Monghyr. |
| Misra, Kesabnandan | ... | " Debikanta Thakur | ... | Muzaffarpur. |
| Panda, Badrinarayan | ... | " Rameswar Pathak Kavya Vyakarantirtha | ... | Dhauni, Hariharpur, Santhal Parganas. |
| " Ramprasad | ... | " ditto | ... | ditto |
| Pathak, Taradatta | ... | " Srikrishna Misra | ... | Banadwar, Monghyr. |
| Sarma, Radheyam | ... | " Jagadananda Thakur | ... | Barahiya, Monghyr. |

## BIJAY CENTRE, BURDWAN—*contd.*

| Name of candidate | Name of teacher. | Place of *tol* |
|---|---|---|
| | **SARASWAT.** | |
| | *Second Division.* | |
| Chakravarti, Ramendranath ... | Pandit Herambanath Kavya Vyakarantirtha | Kalna, Burdwan. |
| Pal, Jitendranath ... | " ditto ... | ditto. |
| Pandeya, Darbari ... | " Raghunath Pathak ... | Bhandaro, Sonthal Parganas. |
| | **KALAP** | |
| | *Second Division* | |
| Pande, Ramaprasad ... | Pandit Jagadishchandra Smriti Vyakaran tirtha ... | Pakur, Sonthal Parganas |
| | **SANKSHIPTASAR.** | |
| | *Second Division* | |
| Bhattacharyya, Anathbandhu ... | Pandit Harakali Vidyaratna ... | Barabanan, Gotan, Burdwan. |
| " Bhabadeb ... | " Dwarkesh Tarkabhusan ... | Searsole, Burdwan. |
| " Hangseswar ... | " ditto ... | ditto |
| " Tulsidas ... | " Nalinakshya Tarkatirtha .. | Ikhrah, Burdwan |
| Misra, Syamapada ... | " Lakshminarayan Smritiratna ... | Kajora, Andul, Burdwan. |
| | **MUGDHABODHA.** | |
| | *First Division.* | |
| Goswami, Indranarayan ... | Pandit Charukrishna Smriti Tarkatirtha ... | Amadpur, Burdwan. |
| | *Second Division* | |
| Bhattacharyya, Dhirendra ... | Pandit Anantaram Shastri ... | ঠঠ Mirghat, Benares. |
| " Rammaya ... | " Lalitprasad Kavya Vyakarantirtha .. | Gopalpur, Burdwan. |
| Chakravarti, Akshayachandra ... | " Jatishchandra Misra Vyakarantirtha | D ঠ্ঠ, Nadia Chatra, Benares. |
| Ghosal, Rakshyakali ... | " Jagadishchandra Smriti Vyakaran tirtha ... | Pakur, Sonthal Parganas. |
| Mukhopadhyaya, Prafullakumar ... | " Ramhari Smrititirtha ... | Bijay Chatuspathi, Burdwan. |
| Ray, Rampada ... | " Hangseswar Vidyaratna ... | Abhirampur, Aral, Burdwan. |
| | **KAVYA** | |
| | *First Division* | |
| Bhattacharyya, Rajendrachandra ... | Pandit Anantaram Shastri ... | ঠঠ, Mirghat, Benares. |
| | *Second Division.* | |
| Bandyopadhyaya, Nalinakshya ... | Pandit Haranchandra Smrititirtha ... | Tiluri, Bankura. |
| " Sibchandra ... | " Ramhari Smrititirtha ... | Bijay Chatuspathi, Burdwan. |
| Bhattacharyya, Jitendranath ... | " Khudiram S. Vyakarantirtha ... | Bamira, Bankura |
| " Kahkinkar ... | " Tarapada Smrititirtha ... | Sridharpur, Burdwan. |
| Deharu, Mahalinga ... | " Taracharan Bhattacharyya ... | Tekmani Sanskrit College, Benares. |
| Debsarma, Gurulinga ... | " ditto ... | ditto |
| " Shankar ... | " ditto ... | ditto |
| Jha, Bital ... | " ditto ... | ditto. |
| " Shibshankar ... | " Jadunath Misra ... | Karambagh, Deoghar, Sonthal-Parganas. |
| Lingaswami, Chidghan ... | " Taracharan Bhattacharyya ... | Tekmani Sanskrit College, Benares. |
| Misra, Dayamaya ... | " Tinkari Chakravarti ... | Guhagram, Burdwan. |
| " Sibnandan ... | Private. | |
| Mukhopadhyaya, Bholanath ... | Pandit Lalitanga Kavyatirtha ... | Patrasayer, Bankura. |
| " Byomkesh ... | " Rambrahma Tarkatirtha ... | Ghurisa, Birbhum. |
| " Rakhakrishna ... | " Jyotirmaya Vyakarantirtha ... | Torkona, Burdwan. |
| Nayek, Syamapada ... | " Dwarkesh Tarkabhusan ... | Sealsole, ditto. |
| Sastri, Siddhalinga ... | " Taracharan Bhattacharyya ... | Tekmani S. College, Benares |
| Sibacharyya, Sibalinga ... | " ditto ... | ditto. |

## BIJAY CENTRE, BURDWAN—*concld.*

| Name of candidate. | Name of teacher. | Place of *tol* |
|---|---|---|
| | **SMRITI (*Ka*).** | |
| | *Second Division.* | |
| Bhattacharyya, Ganeshchandra ... | Pandit Rambari Smrititirtha ... | Bijay Chatuspathi, Burdwan |
| " Gaurisankar ... | " ditto ... | ditto |
| " Haridas ... | " Bamandas Vidyaratna .. | Rani H. K S College, Rajshahi. |
| " Panchananda . | " Rambari Smrititirtha ... | Bijay Chatuspathi, Burdwan |
| " Rammaya ... | " Rambrahma Tarkatirtha ... | Ghurisa, Birbhum |
| | **NYAYA (*Ka*)** | |
| | *First Division* | |
| Chattopadhyaya, Bholanath .. | Pandit Bireswar Tarkatirtha ... | Bijay Chatuspathi, Burdwan |
| | *Second Division* | |
| Bhattacharyya, Mrityunjay ... | Pandit Bireswar Tarkatirtha ... | Bijay Chatuspathi, Burdwan |
| Chakravarti, Durgadas ... | " Nalinakshya Tarkatirtha ... | Ikhrah, Burdwan |
| Surma, Basaraj ... | " Bamacharan Tarkatirtha ... | Visudhyananda Vidyalaya, Benares |
| | **VEDANTA (*Ka*)** | |
| | *First Division* | |
| Bhattacharyya, Kumarishchandra ... | Pandit Rameshchandra Vedantatirtha ... | Bijay Chatuspathi, Burdwan |
| | *Second Division* | |
| Bhattacharyya, Durgacharan .. | Pandit Rameshchandra Vedantatirtha .. | Bijay Chatuspathi, Burdwan |
| " Gaurisankar .. | " Rampada Tarka Vedantatirtha .. | Bolepur, Birbhum |
| " Syamadas . | " ditto ... | ditto |
| Mukhopadhyaya, Bankimchandra ... | " Rameshchandra Vedantatirtha ... | Bijay Chatuspathi, Burdwan |
| | **VEDANTA (*Kha*)** | |
| | *Second Division* | |
| Chakravarti, Sachindrachandra ... | Pandit Rameshchandra Vedantatirtha ... | Bijay Chatuspathi, Burdwan |
| | **SANKHYA** | |
| | *Second Division.* | |
| Chaturvedi, Raghunath .. | Pandit Basudeb Vyakarantirtha ... | Sakahara, Barauni-Junction, Monghyr |
| Gupta, Asitaranjan Sen .. | " Rameshchandra Vedantatirtha ... | Bijay Chatuspathi, Burdwan. |
| | **PURAN** | |
| | *Second Division* | |
| Gangopadhyaya, Satkari . | Pandit Lalitanga Kavyatirtha ... | Patrasayer, Bankura |
| | **SAMA VEDA** | |
| | *Second Division* | |
| Chakravarti, Krishnapada ... | Pandit Lalitprasad Kavyatirtha ... | Gopalpur, Burdwan. |
| K. Smrititirtha, Jaykali ... | " Rambari Smrititirtha ... | Bijay Chatuspathi, Burdwan. |
| | **MIMANSA.** | |
| | *Second Division.* | |
| Adhikari, Nagendranath ... | Pandit Rambari Smrititirtha ... | Bijay Chatuspathi, Burdwan |
| Kavyatirtha, Benimadhab ... | " ditto ... | ditto. |

## CHAITANNYADAYINI SABHA, SRIKHANDA.

| Name of candidate. | | Name of teacher. | | Place of tol. |
|---|---|---|---|---|
| | | **HARINAMAMMRITA VYAKARAN** | | |
| | | *Second Division.* | | |
| Chakravarti, Naresh Chandra | ... | Pandit Adwaitadas Babaji | ... | Nabadwip, Nadia |
| Thakur, Achyutananda | ... | " Rakhalananda Thakur | ... | Srikhanda, Burdwan. |
| | | **SANKSHIPTASAR.** | | |
| | | *Second Division* | | |
| Bandyopadhyaya, Nandalal | ... | Pandit Panchanan Vedantasastri | ... | Majigram, Burdwan. |
| Sarkar, Sambhunath | ... | " Ramkinkar Vidyaratna | ... | Chandipur, Birbhum. |
| | | **MUGDHABODHA.** | | |
| | | *First Division.* | | |
| Acharyya, Gayanath | . | Pandit Basantakumar Vidyabhusan | ... | Kirnahar, Birbhum |
| Bhattacharyya, Haripada | ... | " ditto | ... | ditto |
| " Jagadish Chandra | .. | " Sasibhusan Siromani | .. | Gangatikuri, Burdwan. |
| Chakravarti, Bhanab Chandra | . | " Panchanan Smritiratna | ... | Khatundi, Burdwan |
| " Durga Sankar | ... | " Mrityunjoy Kavyatirtha | ... | Galatun, Burdwan. |
| Das, Nityananda | ... | " Rakhalananda Thakur | ... | Srikhanda, Burdwan |
| Dasbairagya, Nrityagopal | ... | " Basantakumar Vidyabhusan | . | Kirnahar, Birbhum |
| | | *Second Division.* | | |
| Bhattacharyya, Harijhan | ... | Pandit Sasibhusan Siromani | ... | Gangatikuri, Burdwan. |
| " Suryyakanta | .. | " Durgadas Smrititirtha | ... | Saragram Jamna, Burdwan |
| Chattopadhyaya, Ramkinkar | ... | " ditto | ... | ditto |
| Gangopadhyaya, Niranjan | .. | " ditto | ... | ditto. |
| Goswami, Rammohan | ... | " Rasbinohan Goswami | . | Kanaidanga, Burdwan. |
| | | **KAVYA** | | |
| | | *First Division* | | |
| Pathak, Kamalakanta | ... | Pandit Radharaman Vedantatirtha | ... | Labhpur, Birbhum |
| | | *Second Division* | | |
| Chakravarti, Kamakhyapada | .. | Pandit Sibaram Smrititirtha | ... | Baharan, Burdwan. |
| Datta, Bholanath | . | " Radharaman Vedantatirtha | . | Labhpur, Birbhum. |
| Thakur, Nimananda | .. | " Rakhalananda Thakur | ... | Srikhanda, Burdwan. |
| | | **SMRITI.** | | |
| | | *Second Division.* | | |
| Bandyopadhyaya, Batakrishna | ... | Pandit Sasibhusan Siromani | ... | Gangatikuri, Burdwan. |
| Bhattacharyya, Basudeb | ... | " ditto | ... | ditto. |
| | | **SANKHYA.** | | |
| | | *First Division.* | | |
| Bhoumik, Surendranath | ... | Pandit Prangopal Goswami Siddhantaratna | | Nabadwip, Nadia. |
| | | **SAMA VEDA.** | | |
| | | *Second Division.* | | |
| Das Gupta, Ramranjan | ... | Pandit Sibaram Smrititirtha | ... | Baharan, Burdwan. |

## VIDYOTSAHINI SABHA, MIDNAPORE.

| Name of candidate | Name of teacher | Place of *tol* |
|---|---|---|
| **SARASWAT CHANDRIKA** | | |
| *Second Division* | | |
| Acharyya, Ramanath ... | Pandit Brindabanchandra Acharyya ... | Kharsawan, Singbhum |
| **SARASWAT.** | | |
| *Second Division* | | |
| Bandyopadhyaya, Madhusudan . | Pandit Ramendranath Kavya Vyakarantirtha | Ranchi, Ranchi |
| Lahiri, Paramananda ... | " ditto ... | ditto |
| **SANKSHIPTASAR** | | |
| *Second Division* | | |
| Bhattacharyya, Jibanchandra . | Pandit Jogendranath Tarkalankar ... | Kathalia, Midnapore |
| " Kenaram ... | " ditto ... | ditto |
| " Pulinbihari ... | " Rakhalchandra Kavyatirtha ... | Pingla, Midnapore |
| Chakravarti, Tribenilal | " Private | |
| Satpathi, Bhubanmohan . | " Banabihari Bhattacharyya, B A .. | Chirimarsai, Midnapore |
| **SUPADMA** | | |
| *Second Division* | | |
| Jana, Kunjabihari | Pandit Ramendranath Kavyatirtha ... | Ranchi, Ranchi. |
| **MUGDHABODHA** | | |
| *Second Division* | | |
| Chakravarti, Amulyacharan . | Pandit Rakhalchandra Kavyatirtha ... | Pingla, Midnapore |
| Sen, Tinkaricbandra . | " Rajanikanta Kavyatirtha ... | Ballabhpur Midnapore |
| Trivedi, Nabendusundar .. | " ditto . | ditto |
| **KAVYA** | | |
| *First Division.* | | |
| Ghatak, Radharaman ... | Pandit Bhupatibhusan Kavya Vyakaran Smrititirtha ... | Bani *tol*, Rajgram, Bankura |
| M. Venkata Subrahmanya Sastri . | " Umapati Trivedi ... | 2, Mitra Lane, Calcutta |
| *Second Division.* | | |
| Acharyya, Sibcharan . | Pandit Brindabanchandra Acharyya ... | Kharsawan, Singbhum |
| Bhattacharyya, Sriram ... | " Raghunam Siromani ... | Kadakuli, Bankura |
| Mahapatra, Anadimandan .. | " Chaturbhuj Kavyatirtha ... | Panchetgar, Midnapore |
| Sarangi, Sambhunath . | " Siddheswar Smrititirtha ... | Dubra, Gidni, Midnapore. |
| Shahoo Akshaykumar ... | " Iswarchandra Kavyatirtha .. | Chandri, Midnapore |
| Bhaskaracharyya Totapalli Subrahmanya Sastri . | " Umapati Trivedi ... | 2, Mitra Lane, Calcutta |
| Khadri Venkata Sesha Shastri .. | " ditto . | ditto |
| Sabarda Venkataram Shastri .. | " ditto ... | ditto. |
| **SMRITI** | | |
| *Second Division* | | |
| Chakravarti, Phanindranath ... | Pandit Ramrakshya Tarkatirtha ... | Aligunge, Midnapore |
| **SAMA VEDA.** | | |
| *Second Division.* | | |
| Satpathi, Bibhubhusan ... | Pandit Trailokyanath Kavya Vyakarantirtha | Bani *tol*, Bellyabera, Midnapore. |
| **MIMANSA.** | | |
| *Second Division.* | | |
| Chakravarti, Dibakar ... | Pandit Mahendranath Vyakarantirtha ... | Habibpur, Midnapore. |
| " Haripada ... | " ditto ... | ditto. |
| **PURAN.** | | |
| *Second Division* | | |
| Bhattacharyya, Anathbandhu ... | Pandit Ramammrita Panchatirtha ... | Khunberia, Midnapore. |

## VIDYOTSAHINI SABHA, MIDNAPORE—*concld*

| Name of candidate | Name of teacher | Place of tol. |
|---|---|---|
| | **SANKHYA** | |
| | *Second Division.* | |
| Bhattacharyya, Banbihari | Pandit Ramrakshya Tarkatirtha | Aligunge, Midnapore |

## SANSKRIT SAMITI, GHATAL.

| | | |
|---|---|---|
| | **SARASWAT** | |
| | *Second Division* | |
| Chakravarti, Bishnupada | Pandit Bhupatycharan Kavya Vyakarantirtha | Khakarda, Midnapore. |
| " Khudiram | " ditto | ditto |
| Pattanayak, Birendranath | " Narayan Kavyatirtha | Mahisadal, Midnapore |
| | **SANKSHIPTASAR** | |
| | *Second Division* | |
| Bhattacharyya, Karunamay | Pandit Satischandra Smrititirtha | Irpala, Midnapore |
| " Panchanan | " ditto | ditto |
| Chakravarti, Radhapada | " Bibhutibhushan Bhattacharyya | Khanjapur, Midnapore. |
| " Sridamchandra | " Charuchandra Smrititirtha | Chakdighi, Burdwan |
| Chattopadhyaya, Bhudebchandra | " ditto | ditto |
| Harh, Tripuracharan | " Srischandra Tarkatirtha | Narajole, Midnapore. |
| | **MUGDHABODHA** | |
| | *Second Division* | |
| Acharyya, Surendranath | Pandit Ramendranath Smrititirtha | Dona, Midnapore |
| Chakravarti, Jnanendranath | " Upendranath Haldar | Rameswarpur, Howrah |
| Misra, Harikrishna | " Gopalchandra Smrititirtha | Deoha, Midnapore |
| | **KAVYA** | |
| | *First Division* | |
| Chakravarti, Asutosh | Pandit Surendranath Tarkaratna | Udang, Howrah |
| " Chandicharan | " Asutosh Kavya Vyakarantirtha | Badanganj, Hooghly. |
| | *Second Division.* | |
| Bhattacharyya, Rambrahma | Pandit Rameswar Kavya Smrititirtha | Karkai, Midnapore |
| Chakravarti, Biseswar | " Manmathanath Jyotisekhar | Ghatal |
| " Jogendranath | " ditto | ditto |
| " Satischandra | " Srischandra Tarkatirtha | Narajole, Midnapore. |
| | **SMRITI.** | |
| | *Second Division.* | |
| Uthasani, Meherlal | Pandit Surendranath Tarkatirtha | Udang, Howrah |
| Vyakarantirtha, Sripaticharan Das | " Ramendranath Smrititirtha | Dona, Midnapore. |
| | **PURAN** | |
| | *Second Division* | |
| Bhattacharyya, Tarapada | Pandit Navakanta K. S T. Darsantirtha | Bhamna, Midnapore. |
| | **JYOTISH.** | |
| | *Second Division* | |
| Bhattacharyya, Gourmohan | Pandit Manmathanath Jyotisekhar | Ghatal, Midnapore |
| | **SAMAVEDA.** | |
| | *Second Division* | |
| Bhattacharyya, Ramnafar | Pandit Rameswar Kavya Smrititirtha | Karkai, Midnapore |
| | **MIMANSHA.** | |
| | *Second Division.* | |
| Kairi, Kesorimohan | Pandit Satischandra Smrititirtha | Irpala, Midnapore. |

## SANSKRIT SAMITI, BARABERIA

| Name of candidate | Name of teacher | Place of tol |
|---|---|---|
| | **MUGDHABODHA** | |
| | *Second Division* | |
| Bhattacharyya, Iswar | Pandit Bhagabatcharan Kavyabhushan | Dhanda, Midnapore |
| Pati, Kshpada | " Narayanchandra Vyakarantirtha | Chaknan, Narghat, Midnapore |
| | **SARASWAT** | |
| | *Second Division* | |
| Bhoj, Gangadhar | Pandit Annadacharan Kavya Vyakarantirtha | Barasabra, Midnapore |
| Deb Sarma, Manindranath | " Sailajakanta Nyayaratna | Barisa, Bhemua, Midnapore |
| Mirdha, Gobardhan | " Narayanchandra Vyakarantirtha | Chaknan, Narghat, Midnapore. |
| " Narayanchandra | " Bhagabati Kavyabhusan | Dhanda, Midnapore |
| Panda, Bholanath | " Syamsundar Vyakarantirtha | Simulkhanda, Kalagachia, Midnapore |
| " Bhupendranath | " Narayanchandra Vyakarantirtha | Chaknan, Narghat, Midnapore |
| " Debendranath | " ditto | ditto |
| Sanbaghna, Ashutosh | " Padmalochan Vedatirtha | Dwarakapur, Totanala, Midnapore |
| | **SANKSHIPTASAR** | |
| | *First Division* | |
| Bhattacharyya, Upendranath | Pandit Gayeswar Kavyatirtha | Tikasi, Heria, Midnapore |
| | *Second Division* | |
| Panda, Basantakumar | Pandit Annadacharan Kavya Vyakarantirtha | Barasabra, Sabang, Midnapore. |
| | **SAMA VEDA** | |
| | *First Division* | |
| Panda, Sitanath | Pandit Saradaprasad Vyakarantirtha | Lakhya, Midnapore |
| | *Second Division* | |
| Chakravarti, Sambash | Pandit Dinanath Kavyatirtha | Bamdebberia, Midnapore |
| Misra, Ganapati | " Sailajakanta Nyayaratna | Barisa, Bhemua, Midnapore |
| | **SANKHYA** | |
| | *Second Division* | |
| Bhattacharyya, Ramanath | Pandit Surendranath Sankhya Vedantatirtha | Kishorepur, Totanala, Midnapore |

## SANSKRIT SAMITI, CONTAI

| | | |
|---|---|---|
| | **LAGHU KAUMUDI.** | |
| | *Second Division* | |
| Kar, Bijaykrishna | Pandit Baradakanta Kavyatirtha | Mugberia, Midnapore |
| | **SARASWAT CHANDRIKA** | |
| | *First Division* | |
| Panda Surendranath | Pandit Lambodar Misra Kavyatirtha | Egra, Midnapore |
| | *Second Division.* | |
| Acharyya, Adharchandra | Pandit Chaturbhuj Kavyatirtha | Mahabasra, Egra, Midnapore |
| " Bhuvanchandra | " Jaynarayan Misra Kavyatirtha | Samantakanda, Kharungar, Midnapore |
| " Sibnarayan | " ditto | ditto |
| " Tapodhan | " Upendranath Vyakarantirtha | Gopalchak, Basantia, Midnapore |

## SANSKRIT SAMITI, CONTAI—*contd.*

| Name of candidate | | Name of teacher | Place of *tol.* |
|---|---|---|---|
| | | **SARASWAT CHANDRIKA—*concld*** | |
| | | ***Second Division*** | |
| Bhattacharyya, Srinathchandra | ... | Pandit Kalikumar Kavya Vyakarantirtha ... | Mahajan, Sagareswar, Midnapore. |
| Das, Prankrishna | ... | „ Basantakumar Misra Kavya Vyakarantirtha ... | Panchrole, Midnapore. |
| „ Ramanath | ... | „ Kalikumar Darsanacharyya ... | Talari, Khakra, Balasore. |
| Dinda, Bibhutibhusan | ... | „ Kartickchandra Smrititirtha ... | Padurbheri, Janka, Balasore |
| Dubai, Lakshminarayan | .. | „ Madhusudan Kar Kavyatirtha ... | Kumirda, Midnapore |
| Hota, Madhabchandra | .. | „ Upendranath Vyakarantirtha ... | Gopalchak, Basantia, Balasore |
| Kar, Gobindachandra | ... | „ Pramathanath Kavyatirtha ... | Chandanpur, Mirgoda, Midnapore |
| „ Prabhaschandra | . | „ Dwarkanath Kavyatirtha ... | Atilagori, Contai, Midnapore. |
| „ Sriniba | ... | „ Upendranath Vyakarantirtha ... | Gopalchak, Basantia, Midnapore |
| Misra, Aswinikumar | ... | „ Kartikchandra Smrititirtha ... | Padurbheri, Janka, Midnapore |
| „ Bhubanchandra | ... | „ Bhutnath Misra Kavyatirtha ... | Lakhi, Heria, Midnapore |
| „ Himanshusekhar | ... | „ Lambodar Misra Kavyatirtha ... | Egra, Midnapore. |
| „ Hemantakumar | ... | „ Basantakumar Misra Kavya Vyakarantirtha ... | Panchrole, Midnapore. |
| „ Kalipada | .. | „ Chaturbhuj Kavyatirtha ... | Mahabisra, Egra, Midnapore. |
| „ Kartickchandra | ... | „ Pramathanath Kavyatirtha ... | Chandanpur, Mirgoda, Midnapore |
| Mukhopadhyaya, Atulchandra | ... | „ Bhupendranath Kavya Vyakarantirtha ... | Kosaidighi, Mugberia, Midnapore |
| Nanda, Brajendranath | ... | „ Baradakanta Kavyatirtha ... | Mugberia, Midnapore |
| Pahari, Bhupendranath | ... | „ Kartikchandra Smrititirtha ... | Padurbheri, Janka, Midnapore. |
| „ Syamapada | ... | „ Trailokyanath Kavya Sankhyatirtha | Sarda, Contai, Midnapore |
| Panda, Bhutnath | .. | „ Jogendranath Kavyatirtha ... | Mohali, Heria, Midnapore. |
| „ Ganeshchandra | ... | „ Chaturbhuj Kavyatirtha . | Mahabisra, Egra, Midnapore |
| „ Gobindaprasad | ... | „ Baradakanta Kavyatirtha ... | Mugberia, Midnapore |
| „ Gopalchandra | ... | „ Pitambar Kavya Vyakaran Sankhyatirtha ... | Dandpur, Nandigram, Midnapore. |
| „ Indubhusan | ... | „ ditto ... | ditto |
| „ Rajblochan | .. | „ ditto .. | ditto |
| „ Ramakanta | ... | „ Upendranath Vyakarantirtha ... | Gopalchak, Basantia, Midnapore |
| Pani, Ramakanta | ... | „ Kalikumar Kavya Vyakarantirtha ... | Mahajan, Sagareswar, Midnapore. |
| Panigrahi, Bhupendranath | .. | „ Kartickchandra Smrititirtha .. | Padurbheri, Janka, Midnapore |
| „ Rudranarayan | ... | „ Lambodar Misra Kavyatirtha ... | Egra, Midnapore |
| Pari, Mukundamurari | ... | „ Krishnachandra Tarka Vyakarantirtha ... | Sipur, Panchrole, Midnapore |
| Pariari, Jogendranath | .. | „ Chaturbhuj Kavyatirtha ... | Mahabisra, Egra, Midnapore |
| Pati, Tribikram | ... | „ Krishnachandra Tarka Vyakarantirtha ... | Sipur, Panchrole, Midnapore. |
| Tripathi, Byomkesh | ... | „ Baradakanta Kavyatirtha ... | Mugberia, Midnapore. |
| „ Rameswar | . | „ Madhusudan Kar Kavyatirtha ... | Kumirda, Midnapore |
| | | **SARASWAT** | |
| | | ***Second Division.*** | |
| Acharyya, Jajneswar | ... | Pandit Sripaticharan Kavyatirtha ... | Balageria, Midnapore |
| „ Lakshmikanta | . | „ ditto ... | ditto |
| „ Manindranath | ... | „ Jogendranath Kavyatirtha ... | Mohati, Heria, Midnapore |
| Adhikari, Kunjabihari Das | . | „ ditto ... | ditto |
| „ Trailokyanath Das | ... | „ ditto ... | ditto. |
| Bhattacharyya, Nabakumar | ... | „ Kalikumar Kavya Vyakaran Sankhyaratna ... | Mahajan, Midnapore |
| Chakravarti, Anandachandra | .. | „ Bhutnath Misra Kavyatirtha ... | Lakhi, Heria, Midnapore. |
| „ Girijamohan | ... | „ Rameshchandra Panchatirtha ... | Basudebpur, Midnapore |
| „ Jajneswar | . | „ Madhusudan Kar Kavyatirtha ... | Kumirda, Midnapore. |
| Das, Dasarathi | ... | „ Jaynarayan Misra Kavyatirtha ... | Samantakhanda, Midnapore |
| „ Girishchandra | ... | „ Mahendranath Vyakarantirtha ... | Dokhali, Midnapore |
| „ Gobardhan | .. | „ Trailokyanath Kavya Sankhyatirtha | Sarda, Midnapore |
| „ Gopinath | ... | „ Mahendranath Kavya Purantirtha ... | Bahiri, Deulbar, Midnapore |
| „ Prafullakumar | ... | „ Kalikumar Kavya Vyakaran Sankhyaratna ... | Mahajan, Midnapore. |
| „ Rameshchandra | ... | „ ditto ... | ditto |
| Dhara, Rakhaldandra | ... | „ Bhutnath Kavyatirtha ... | Nandigram, Midnapore |
| Jana, Lalitkumar | ... | „ Bhutnath Misra Kavyatirtha ... | Lakhi, Heria, Midnapore |
| Kar, Kalikinkar | ... | „ Kalikumar Kavya Vyakaran Sankhyaratna ... | Mahajan, Midnapore. |
| „ Rajanikanta | ... | „ Bipin Bihari Kavyatirtha ... | Golara, Midnapore |
| „ Sitanath | ... | „ Basantakumar Misra Kavya Vyakarantirtha. .. | Panchrole, Midnapore. |
| Khatua, Kishorimohan | ... | „ Madhabchandra Vyakarantirtha ... | Chingurdania, Heria, Midnapore. |

## SANSKRIT SAMITI, CONTAI—*contd.*

| Name of candidate | Name of teacher | Place of *tol* |
|---|---|---|
| | **SARASWAT—*concld*** | |
| | ***Second Division*** | |
| Maiti, Iswarchandra .. | Pandit Bhutnath Kavyatirtha ... | Nandigram, Midnapore |
| „ Karahcharan ... | ditto ... | ditto |
| Misra, Jatindranath ... | „ Pitambar Kavya Vyakaran Sankhya tirtha . | Daudpur Midnapore |
| „ Mangobinda ... | „ Chaturbhuj Kavyatirtha .. | Mahabisra Egra, Midnapore |
| „ Nalinakshya ... | „ Lambodar Kavyatirtha | Basanti, Midnapore |
| „ Rameswar ... | „ Madhusudan Kar Kavyatirtha | Kumirda, Midnapore |
| „ Sripada ... | „ Pitambar Kavya Vyakaran Sankhya tirtha | Daudpur, Midnapore |
| Nanda, Gaurikanta .. | „ Kalikumar Vyakarantirtha ... | Anaha, Mirgoda, Midnapore |
| „ Sarbeswar . | „ Jogendranath Kavyatirtha . | Mahati, Heria, Midnapore. |
| Palai, Sristidhar .. | „ Bhutnath Misra Kavyatirtha . | Laksha, Heria, Midnapore |
| Pahari, Dinabandhu ... | „ Pitambar Kavya Vyakaran Sankhya-tirtha . | Daudpur, Midnapore. |
| „ Janakinath .. | „ Jaynarayan Misra Kavyatirtha .. | Samantakhanda, Midnapore. |
| Panchadhyayi, Sasibhusan ... | „ Mahendranath Vyakarantirtha .. | Dekhah, Midnapore |
| Panda, Bhutnath ... | „ Pitambar Kavya Vyakaran Sankhya-tirtha ... | Daudpur, Midnapore |
| „ Damodar . | „ Lambodar Misra Kavyatirtha ... | Egra, Midnapore |
| „ Manibhusan | „ Jogendranath Kavyatirtha . | Mohati, Heria, Midnapore |
| „ Narendranath .. | „ Trailokyanath Kavyatirtha ... | Saraswatipur, Midnapore |
| „ [illegible]nath ... | „ Jogendranath Kavyatirtha . | Mohati, Heria, Midnapore. |
| „ Satischandra . | „ Pitambar Kavya Vyakaran Sankhya tirtha . | Daudpur, Midnapore |
| „ Surendranath .. | „ Bipinbihari Kavyatirtha | Golara, Midnapore |
| Raut, Kshemapada ... | „ Debendranath Vidyabhusan . | Suntia, Mohanpur, Midnapore |
| Ray, Ganganarayan ... | „ Jaynarayan Misra Kavyatirtha .. | Samantakhanda, Midnapore |
| „ Jadabendranath . | „ Ramjiban Kavya Smrititirtha .. | Baighai, Midnapore. |
| „ Jogendranath | „ Bhutnath Kavyatirtha . | Nandigram, Midnapore |
| „ Nagendranath . | „ Mahendranath Vyakarantirtha . | Dekhah, Midnapore |
| Sadhaki, Abinashchandra . | „ Sagarchandra Kavyratna | Rajarampur, Midnapore. |
| Tripathi, Lakshmikanta | „ Damodar Kavyatirtha | Krishnagar, Heria, Midnapore |
| | **CHANDRIKA** | |
| | ***First Division*** | |
| Acharyya, Jiban Krishna ... | Pandit Upendranath Vyakarantirtha | Gopalchak, Basantia, Midnapore. |
| Bhattacharyya, Sitaram . | „ Sitanath Das Kavyatirtha | Garkrishnagar, Contai, Midnapore |
| Pati, Krishnachandra . | „ Krishnachandra Tarka Vyakarantirtha | Sipai, Panchrole, Midnapore |
| Pradhan, Bipinbihari .. | „ Pitambar Kavya-Smrititirtha ... | Janka, Midnapore. |
| | ***Second Division*** | |
| Acharyya, Dinanath ... | Pandit Baradakanta Kavyatirtha . | Mugberia, Midnapore |
| „ Ramanath | „ Chaturbhuj Kavyatirtha | Mahabisra, Midnapore |
| Bhattacharyya, Basantakumar .. | „ Kalikumar Kavya-Vyakarantirtha | Mahajan, Sagareswar, Midnapore |
| „ Bipinbihari .4 | „ Kalikumar Darsanacharyya | Talari, Kakhra, Balasore |
| „ Dinabandhu ... | „ Kalikumar Kavya Vyakarantirtha .. | Mahajan, Sagareswar, Midnapore. |
| Chakravarti, Bibhutibhusan . | „ Sitanath Das Kavyatirtha .. | Garkrishnagar, Contai, Midnapore |
| Das, Bankimchandra | „ ditto ... | ditto |
| „ Mrityunjay . | „ Basantakumar Misra Kavya Vyakaran tirtha .. | Panchrole, Midnapore |
| „ Ramanath .. | „ Madhusudan Kar Kavyatirtha | Kumirda, Midnapore |
| Ghosh, Pareshchandra . | „ Pitambar Kavya Smrititirtha | Janka, Midnapore |
| Kar, Ashutosh . | „ Bipinbihari Kavyatirtha .. | Golara, Midnapore |
| „ Kaminikanta ... | „ Pramathanath Kavyatirtha | Chandanpur, Midnapore |
| Misra, Bhupendranath ... | „ Chaturbhuj Kavyatirtha . | Mahabisra, Midnapore |
| „ Dhananjay .. | „ Kartickchandra Smrititirtha .. | Padurbheri, Janka, Midnapore. |
| „ Purnachandra ... | „ Baradakanta Kavyatirtha ... | Mugberia, Midnapore |
| Nanda, Jnanendranath ... | „ Chaturbhuj Kavyatirtha ... | Mahabisra, Midnapore |
| „ Pasupati ... | „ Adharchandra Das ... | Contai, Midnapore |
| Pahari, Purnachandra ... | „ Madhusudan Smritiratna ... | Benamuri, Midnapore |
| Panda, Bhutnath . | „ Pitambar Kavya Smrititirtha ... | Janka, Midnapore |
| „ Chintamany ... | „ Basantakumar Misra Kavya Vyakaran-tirtha ... | Panchrole, Midnapore |
| „ Lakshman Charan ... | „ Kartickchandra Smrititirtha ... | Padurbheri, Janka, Midnapore |
| „ Nilmani ... | „ Upendranath Vyakarantirtha ... | Gopalchak, Basantia, Midnapore |
| „ Srikanta ... | „ ditto ... | ditto |
| „ Surendranath .. | „ Trailokyanath Kavya Sankhyatirtha | Sarda, Contai, Midnapore |
| „ Syamacharan ... | „ Kalikumar Vyakarantirtha .. | Anaha, Mirgoda, Midnapore |
| Pani, Ramanath ... | „ Kalikumar Kavya Vyakarantirtha ... | Mahajan, Sagaroswar, Midnapore |

## SANSKRIT SAMITI, CONTAI—*contd.*

| Name of candidate | Name of teacher | Place of *tol* |
|---|---|---|
| | **CHANDIKA—*concld*** | |
| | ***Second Division*** | |
| Pradhan, Rakhalchandra | Pandit Pitambar Kavya Smrititirtha | Janka, Midnapore. |
| Singhatal, Sasadhar | " Rameshchandra Panchatirtha | Basudebpur, Midnapore |
| Tripathi, Debendranath | " Baralakanta Kavyatirtha | Mugberia, Midnapore. |
| Upadhyaya, Ashutosh | " Upendranath Vyakarantirtha | Gopalchak, Basantia, Midnapore |
| | **SANKSHIPTASAR** | |
| | ***Second Division*** | |
| Acharyya, Jaynarayan | Pandit Jaynarayan Misra Kavyatirtha | Samantakhanda, Midnapore |
| Das, Harekrishna | " Lambodar Kavyatirtha | Basantia, Midnapore. |
| Misra, Rabindranath | " Dibakar Vedantapanchanan | Contai, Midnapore. |
| Pahari, Abantikumar | " Ganganarayan Siromani | Benamundi, Contai, Midnapore |
| " Ganganarayan | " Akshayanarayan Jyotirbinode | Depal, Midnapore |
| " Jibankrishna | " Lambodar Kavyatirtha | Egrachandaneswar, Midnapore |
| " Rameswar | " Ramanath Kavyabhusan | Nandigram, Midnapore. |
| Panda, Bankimchandra | " Jitendra Kavyaratna | Marisda, Deulbar, Midnapore. |
| " Purusottam | " Radhakrishna Smritiratna | Jhasa, Basantia, Midnapore |
| " Rambari | " Pitambar Kavya Smrititirtha | Janka, Midnapore. |
| Satpathi, Chandranath | " Ramanath Kavyabhusan | Nandigram, Midnapore |
| " Rakhalchandra | " ditto | ditto |
| " Surendranath | " ditto | ditto |
| Tripathi, Srimbash | " ditto | ditto |
| " Tarendranath | " Girishchandra Kavya Vyakarantirtha | Biruha, Midnapore. |
| | **MUGDHABODHA** | |
| | ***Second Division*** | |
| Tripathi, Hemchandra | Pandit Dwarkanath Tripathi Vidyaratna | Nilda, Midnapore |
| | **KAVYA** | |
| | ***First Division.*** | |
| Mahapatra, Giridhari | Pandit Bipin Bihari Kavyatirtha | Golara, Midnapore. |
| Singha, Pareshchandra | " Jogendranath Kavyatirtha | Mohati, Heria, Midnapore. |
| | ***Second Division.*** | |
| Adhikari, Bhutnath Das | Pandit Damodar Kavyatirtha | Krishnagar, Heria, Midnapore. |
| Bhattacharyya, Priyanath | " Brajanath Vedantaratna | Tatanala, Midnapore |
| Chakravarti, Upendranath | " Dibakar Vedantapanchanan | Contai ditto |
| Das, Jnanendranath | " Ramanath Kavyabhusan | Nandigram, Midnapore |
| Dwivedi, Haribar | " Debendranath Vidyabhusan | Santia, ditto. |
| Misra, Byomkesh | " Trilochan K. Smrititirtha | Simulia, ditto. |
| " Dibakar | " Jogendranath Kavyatirtha | Mohati Heria, Midnapore |
| " Purusattam | " Chaturbhuj Kavyatirtha | Mahabara, ditto |
| Panda, Atulchandra | " Jogendranath Kavyatirtha | Mohati, Heria, ditto |
| " Bamacharan | " Upendranath Vyakarantirtha | Gopalchak, ditto. |
| " Harishchandra | " Basantakumar Misra Kavya Vyakarantirtha | Panchrole, ditto. |
| " Sibaprasad | " Ranjiban Kavya Smrititirtha | Baighai, ditto |
| Panigrahi Ramakanta | " Chaturbhuj Tarkatirtha | Haipur, ditto |
| " Syamapada | " Sripaticharan Kavyatirtha | Bolageria, ditto. |
| Ray, Jagadish Chandra | " Girishchandra Kavya Vyakarantirtha | Biruha, ditto |
| Sarangi, Pramathanath | " Dhyambar Kavyatirtha | Tajpur, ditto |
| Satpathi, Rakhalchandra | " Pitamber Kavya Vyakaran Sankhyatirtha. | Daudpur, ditto |
| | **SMRITI (*Ka*).** | |
| | ***Second Division.*** | |
| Pahari, Bhupendranath | Pandit Chandramohan Smrititirtha | Tajpur, Midnapore |
| Panda, Jnanadacharan | " Dibakar Vedantapanchanan | Contai, dirto |
| Sarangi, Manmathanath | " Chandramohan Smrititirtha | Tajpur, ditto. |
| Vyakarantirtha, Bhubanmohan | " Lakshmanchandra Nyayasiromani | Baram, Reapara, Midnapore. |

## SANSKRIT SAMITI CONTAI—*concld.*

| Name of candidate. | Name of teacher | Place of *tol* |
|---|---|---|
| | **SMRITI (*Ga*).** | |
| | ***Second Division*** | |
| Tripathi, Kripasindhu ... | Pandit Dibakar Vedantapanchanan ... | Contai, Midnapore |
| | **SANKHYA.** | |
| | ***Second Division*** | |
| Panda, Hemantakumar ... | Pandit Pitambar Kavya Vyakaran Sankhya tirtha ... | Nandigram, Midnapore |
| | **PURAN.** | |
| | ***Second Division*** | |
| Das, Iswarchandra .. | Pandit Sagarchandra Kabiratna .. | Rajarampur, Midnapore |
| | **JYOTISH** | |
| | ***Second Division*** | |
| Misra, B[illegible]takumar ... | Pandit Dibakar Vedantapanchanan . | Contai, Midnapore |
| | **SAMA VEDA** | |
| | ***Second Division.*** | |
| Acharyya, Naranarayan .. | Pandit Madhusudan Kar Kavyatirtha .. | Kumirda, Midnapore |
| Misra, Bhaskarananda ... | " Sitanath Das Kavyatirtha ... | Kishorenagar, Midnapore |
| " Nisikanta ... | " Trailokyanath Kavya Sankhyatirtha | Sarda, Contai, Midnapore |
| Nanda, Lakshmikanta ... | " Baradakanta Kavyatirtha ... | Mugberia, Midnapore |
| Panda, Bhupendranath ... | " Upendranath Vyakarantirtha ... | Gopalchak, Basantia, Midnapore |
| " Rajanikanta ... | " Jogendranath Panda Kavyatirtha .. | Mohati, Heria, Midnapore. |
| Pati, Srinibash .. | " Sripaticharan Kavyatirtha ... | Balageria, Midnapore |
| Tripathi, Trailokyanath ... | " Dwarkanath Tripathi Vidyaratna ... | Nilda, Mohanpur, Midnapore. |
| | **MIMANSA** | |
| | ***Second Division*** | |
| Kavyatirtha, Ramkrishna ... | Pandit Krishna Chandra Tarka-Vyakaran tirtha .. | Sripur, Panchrole, Midnapore. |
| Pahari, Hemchandra ... | " Dinanath Kavyatirtha ... | Nandigram, Midnapore |

## SARASWAT SAMAJ, BANKURA

### SANKSHIPTASAR

| | | |
|---|---|---|
| | ***Second Division*** | |
| Bandyopadhyaya, Kamalakanta .. | Pandit Ramnath Kavyatirtha . | Ramchandrapur, Manbhum |
| Bhattacharyya, Santoshkumar ... | " Kumudkanta Smritibhusan .. | Bankura, Bankura |
| Chakravarti, Bholanath .. | " Ramnath Kavyatirtha .. | Ramchandrapur, Manbhum |
| " Harishankar ... | " Anangamohan Tarkabhusan .. | Bankura, Bankura |
| Chattopadhyaya, Gaurisankar ... | " Kumudkanta Smritibhusan .. | ditto |
| Dhar, Satischandra ... | " Dwarkanath Vedantatirtha ... | Kusumtikuri, Bankura |
| Goswami, Ambujakshya .. | " Anangamohan Tarkabhusan ... | Bankura, Bankura |
| " Anilkrishna ... | " Ramgati Vidyanidhi ... | ditto |
| " Satyaban ... | " Kumudkanta Smritibhusan ... | ditto |
| Nayak, Upendranath ... | " Srinathchandra Kavya Vyakaran-tirtha ... | Brahmandiha, Bankura |
| Pathak, Kiritibhusan ... | " Anangamohan Tarkabhusan ... | Bankura, Bankura |
| " Nibaranchandra ... | " ditto ... | ditto |
| Patra, Mahadeb ... | " Ramgati Vidyanidhi ... | ditto |
| " Sitanath ... | " ditto ... | ditto |
| Sanmigrahi, Gobindalal ... | " Chintamani Kavya Vyakaran Tarka-tirtha ... | Bankata, Simlapal, Bankura |
| Satpathi, Nityananda ... | " Kalipada Kavyatirtha ... | Gaurra, Simlapal, Bankura. |
| " Surendranath ... | " ditto ... | ditto. |
| Sural, Gourchandra ... | " Ramgati Vidyanidhi ... | Bankura, Bankura |

## SARASWAT SAMAJ, BANKURA—*concld.*

| Name of candidate | Name of teacher. | Place of *tol* |
|---|---|---|
| | **MUGDHABODHA** | |
| | *Second Division* | |
| Chattopadhyaya, Debendranath | Pandit Anangamohan Tarkabhusan | Bankura, Bankura |
| Gangopadhyaya, Kalipada | „ Chintamany Kavya Vyakaran Tarkatirtha | Bankata, Bankura. |
| Mahapatra, Balbhadra Singha | „ ditto | ditto. |
| Mukhopadhyaya, Kalikrishna | „ Anangamohan Tarkabhusan | Bankura, Bankura |
| Patra, Ashutosh | „ Srinathchandra Kavya Vyakaran-tirtha | Brahmandia, Harmarsa, Bankura |
| Ray, Mahadeb | „ Anangamohan Tarkabhusan | Bankura, Bankura. |
| | **KAVYA** | |
| | *Second Division* | |
| Bandyopadhyaya, Manoranjan | Pandit Ramgati Vidyanidhi | Bankura, Bankura |
| Barat, Mriganka Shekhar | „ Kumudkanta Smritibhusan | ditto. |
| Bhattacharyya, Ramkrishna | „ Ramgati Vidyanidhi | ditto |
| Mahanti, Banamali | „ Dwarkanath Vedantatirtha | Kusumtikuri, Bankura |
| Pathak, Trilochan | „ Anangamohan Tarkabhusan | Bankura, Bankura |
| Satpathi, Jaygopal | „ Chintamany Kavya Vyakaran Tarkatirtha | Bankata, Simlapal, Bankura. |
| „ Purnachandra | „ Mahadev Kavyatirtha | Kendberia, Simlapal, Bankura. |
| „ Ramkrishna | „ ditto | ditto |
| | **MIMANSA** | |
| | *Second Division* | |
| Singha, Jatindramohan | Pandit Chintamani Kavya Vyakarantarkatirtha | Bankata, Bankura |
| | **PURAN** | |
| | *Second Division.* | |
| Bandyopadhyaya, Badyanath | Pandit Kumudkanta Smritibhusan | Bankura, Bankura |
| Goswami, Radhikaprasad | ditto | ditto |

## DACCA.

### LAGHU KAUMUDI

*Second Division*

| | | |
|---|---|---|
| Basu, Nirmalendu | Pandit Rameshchandra Tarkatirtha | Saktiasram, Dacca. |
| Bhattacharyya, Jamimikumar | „ Herambanath Tarkatirtha | Sanskrit College, Dacca |
| „ Jamimnath | „ Rameshchandra Tarkatirtha | Saktiasram, Dacca |
| „ Mukundakumar | „ Kalichandra Bidyabhusan | Murapara, Dacca |
| Bhaumik, Jajneswar | „ Herambanath Tarkatirtha | Sanskrit College, Dacca |
| Chakravarti, Ashutosh | „ Haridhan Kavya Vyakarantirtha | 68, Sutrapur Road, Dacca |
| „ Gobindachandra | „ ditto | ditto |
| „ Kalikinkar | „ Krishnakishore Sankhyabhusan | Medinimandal, Dacca |
| „ Kshitimohan | „ Gaganchandra Tarkatirtha | Kalikapur, Simulia, Dacca |
| „ Raharan | „ Gaurangachandra Kavyatirtha | Sutrapur, Dacca. |
| „ Saradakishore | „ Haridhan Kavya Vyakarantirtha | 68, Sutrapur Road, Dacca. |
| Pal, Bipinbihari | „ Tripuracharan Tarkabagisa | Tantar, Ruadi, Dacca |
| Sen, Asokachandra | „ Haridhan Kavya Vyakarantirtha | 68, Sutrapur Road, Dacca |
| „ Satyaranjan | „ ditto | ditto. |

### KALAP

*First Division.*

| | | |
|---|---|---|
| Thakur, Purnachandra | Pandit Kalidas Vidyabinode | Iswarpathsala, Unasia, Faridpur. |

*Second Division*

| | | |
|---|---|---|
| Acharyya, Hemchandra | Pandit Kishormohan Saptasastri | Sabhar, Dacca |
| „ Narayanchandra | „ Ramacharan Vyakarantirtha | Jantrail, Dacca. |
| „ Narendrachandra | „ Debicharan Tarkabhusan | Tolbasail, Dacca. |

## DACCA—*contd.*

| Name of candidate | | Name of teacher | | Place of *tol* |
|---|---|---|---|---|
| | | **KALAP—*concld*** | | |
| | | ***Second Division*** | | |
| Baul, Jitendramohan | .. | Pandit Bhajakrishna Smritiranjan | .. | Narsingdi, Dacca |
| Bandyopadhyaya, Amulyakumar | ... | " Herambanath Tarkatirtha | .. | Sanskrit College, Dacca |
| Bhattacharyya, Harendranath | ... | " ditto | . | ditto. |
| " Harinarayan | ... | " Bireswar Kavyatirtha | .. | Medinimandal, Dacca |
| Chakravarti, Gangacharan | ... | " Krishnakishore Sankhyabhusan | ... | ditto |
| " Hiralal | ... | " Brajendradas Kavyatirtha | ... | Rajdia, Sirajdighia, Dacca |
| " Jogindramohan | . | " Madanmohan Kavyatirtha | . | Ujanchar, Tippera |
| " Madhabchandra | ... | " Krishnacharan Siromani | .. | Basail, Tolbassail, Dacca |
| " Prangopal | ... | " Lalmohan Kavya Vyakarantirtha | ... | Sonargaon, Dacca |
| " Rajendrachandra | ... | " Bamacharan Vyakarantirtha | ... | Jantrail, Dacca |
| Chattopadhyaya, Pramathanath | ... | " Rameshchandra Tarkatirtha | ... | Saktiasram, Dacca |
| Das, Manomohan | . | " Kalichandra Vidyabhusan | .. | Murapara, Dacca |
| " Srikumar | . | " Debicharan Tarkabhusan | . | Tolbassail, Dacca |
| Gupta, Satyanarayan Sen | .. | " Kalicharan Smrititirtha | .. | Narayangunge, Dacca |
| Mukhopadhyaya, Kshetradas | .. | " Herambanath Chakravarti | ... | 58-1, Tikatooly, Ramna, Dacca |
| Saha, Radhasyam | .. | " Kishorimohan Saptasastri | | Sabhar, Dacca |
| Sarkar, Matilal | ... | " Kailashchandra Vidyabhusan | . | Amtali, Dacca |
| Sen, Pramodechandra | ... | " Kalicharan Smrititirtha | . | Narayanganje, Dacca |
| Sil, Madhusudan | ... | " Krishnakishore Sankhyabhusan | .. | Medinimandal, Dacca |
| " Prabhatchandra | | " Rashbihari Vidyaratna | ... | Baghia, Dacca |
| | | **MUGDHABODHA** | | |
| | | ***Second Division*** | | |
| Brahmachari, Krishnaprasad | | Pandit Kalicharan Smrititirtha | . | Tanbazar, Dacca |
| Datta, Birajbihari | ... | " ditto | . | ditto |
| | | **SARASWAT.** | | |
| | | ***First Division*** | | |
| Batabyal, Aghorenath | ... | Pandit Abhayacharan Chakravarti, M.A | .. | 95, Narayanganj Road, Dacca |
| | | ***Second Division*** | | |
| Chakravarti, Dineshchandra | .. | Pandit Kalikrishna Vidyabinode | ... | Krishnapura, Dacca |
| Chaudhury, Manoranjan | .. | " Bhudebchandra Kavyatirtha | | Gararia, Nagari, Dacca |
| Gupta, Sailendramohan Sen | ... | " Kailashchandra Vidyabhusan | ... | Amtali, Dacca |
| Pal, Narendrachandra | ... | " Bhudebchandra Kavyatirtha | ... | Gararia, Nagari, Dacca |
| | | **KAVYA** | | |
| | | ***First Division*** | | |
| Goswami, Hrishikesh | .. | Pandit Kalichandra Vidyabhusan | . | Murapara, Dacca |
| | | ***Second Division*** | | |
| Bhattacharyya, Atalbihari | .. | Pandit Rameshchandra Tarkatirtha | ... | Saktiasram, Dacca |
| " Jogendrachandra | ... | " Lalmohan Kavya Vyakarantirtha | .. | Sonargaon, Dacca |
| " Jogeshchandra | .. | " Tarakeswar Smrititirtha | ... | Patgram, Dacca |
| " Nakuleswar | ... | " Krishnakishore Sankhyabhusan | .. | Medinimandal, Dacca. |
| Chakravarti, Bipinchandra | .. | " Madhusudan Kavya Vyakarantirtha | | 64, Bhajahari Seth Lane, Wari, Dacca |
| De, Harendrachandra | .. | " Upendrachandra Smrititirtha | .. | Prasannachandra Saraswat Chatuspathi, Dacca |
| " Pramodechandra | ... | " Madhusudan Kavya Vyakarantirtha | | 64, Bhajahari Seth Lane, Wari, Dacca |
| Sarkar, Prabhatkiran | ... | " ditto | ... | ditto |
| " Ramlal | ... | " Herambanath Tarkatirtha | ... | Sanskrit College, Dacca. |
| | | **SAMA VEDA.** | | |
| | | ***First Division.*** | | |
| Debsarma, Durgakumar | ... | Pandit Rameshchandra Tarkatirtha | ... | Saktiasram, Dacca |
| Sanyal, Anantakumar | ... | " Kalicharan Smrititirtha | ... | Narayanganj, Dacca. |

## DACCA—*concld.*

| Name of candidate | Name of teacher. | Place of *tol* |
|---|---|---|
| | **SAMA VEDA—*concld.*** | |
| | ***Second Division*** | |
| Bhattacharyya, Surendranath | Pandit Rameshchandra Tarkatirtha | Saktiasram Dacca. |
| " Upendrakishore | " Upendrachandra Smrititirtha | Prasannachandra Saraswat Chatuspathi, Dacca. |
| | **SANKHYA.** | |
| | ***Second Division*** | |
| Bhattacharyya, Sasibhusan | Pandit Herambanath Tarkatirtha | Sanskrit College, Dacca. |
| | **PURAN.** | |
| | ***Second Division*** | |
| Bhattacharyya, Jaykumar | Pandit Rameshchandra Tarkatirtha | Saktiasram, Dacca |
| " Satyendrakumar | " Upendrachandra Smrititirtha | Prasannachandra Saraswat Chatuspathi, Dacca. |
| Chakravarti, Nagendrakumar | " Rameshchandra Tarkatirtha | Saktiasram, Dacca |
| Goswami, Binodebihari | " Herambanath Tarkatirtha | Sanskrit College, Dacca |
| | **SADHARAN DARSAN** | |
| | ***Second Division*** | |
| Bhattacharyya, Tarinikumar | Pandit Rameshchandra Tarkatirtha | Saktiasram, Dacca |
| | **MIMANSA.** | |
| | ***Second Division*** | |
| Bhattacharyya, Dharaninath | Pandit Upendrachandra Smrititirtha | Prasannachandra Saraswat Chatuspathi, Dacca |
| " Niradacharan | " ditto | ditto |
| | **SMRITI (*Ka*).** | |
| | ***Second Division*** | |
| Thakur, Jajneswar | Pandit Kalidas Vidyabinode | Iswarpathsala, Unasia, Faridpur |

## ARYA SAMMILANI SABHA, BAKLA.

| | | |
|---|---|---|
| | **SARASWAT** | |
| | ***Second Division*** | |
| Gupta, Surendranath Das | Pandit Kalikanto Siromani | Unasia, Faridpur |
| Kar, Sudamchandra | " ditto | ditto. |
| Pal, Rajendralal | " Asutosh Kavyatirtha | Khalisakota, Barisal |
| | **MUGDHABODHA** | |
| | ***Second Division*** | |
| Chaudhury, Charuchandra | Pandit Aswinikumar Kavyatirtha | Gaila, Barisal |
| Gupta, Bimalacharan Sen | " ditto | ditto |
| | **KALAP** | |
| | ***First Division.*** | |
| Bhattacharyya, Krishnadas | Pandit Kasinath Vidyaratna | Chandai, Barisal |
| Biswas, Manaranjan | " Jatindranath Das Gupta | Gaila, Barisal. |
| Chakravarti, Sasadhar | " Kalibandhu Kavyatirtha | Jasirkati, Barisal |
| Chaudhury, Niranjan Rai | " Jitendranath Das Gupta | Gaila, Barisal |
| Gupta Sridhardas | " Jatindranath Das Gupta | ditto |
| Pal, Banbehari | " ditto | ditto. |

## ARYA SAMMILANI SABHA, BAKLA—*concld.*

| Name of candidate. | Name of teacher. | Place of *tol* |
|---|---|---|
| | **KALAP—*concldd.*** | |
| | ***Second Division.*** | |
| Bandyopadhyaya, Haralal ... | Pandit Manaranjan Kavyaratna ... | Kasipara, Barisal |
| Bhattacharyya, Annadacharan ... | " Kasinath Vidyaratna .. | Chandsi, Barisal |
| " Sachhidananda ... | " ditto .. | ditto |
| Biswas, Saratchandra ... | " Jatindranath Dasgupta ... | Gaila, Barisal |
| Chakravarti, Harinarayan .. | " Kasinath Kavyatirtha .. | Chandsi, Barisal |
| " Prafullakumar ... | " Kalikanta Siromani ... | Arya Vidyalaya, Unasia, Faridpur |
| Das, Raicharan ... | " Kasinath Vidyaratna .. | Chandsi, Barisal |
| Gupta, Birendranath Sen ... | " Jatindranath Dasgupta ... | Gaila, Barisal |
| Karmakar, Ramanath Rai .. | " Kalidas Vidyavinode ... | Unasia Iswar Pathsala, Faridpur |
| Thakur, Kesabchandra .. | " Sriprasanna Kavyatirtha ... | Gaila, Barisal. |
| | **KAVYA.** | |
| | ***First Division*** | |
| Bhattacharyya, Krishnadas | Pandit Kasinath Vidyaratna | Chandsi, Barisal |
| | ***Second Division*** | |
| Bhattacharyya, Narayanchandra | Pandit Sriprasanna Kavyatirtha .. | Gaila, Barisal |
| " Nilratan ... | " Kasinath Vidyaratna ... | Chandsi, Barisal. |
| Chakravarti, Dhirendranath | " Kalidas Vidyaratna . | Iswar Pathsala, Unasia, Faridpur. |
| Chattopadhyaya, Rameschandra ... | " Jatindranath Dasgupta . | Gaila, Barisal |
| Das, Manomohan . | " Sriprasanna Kavyatirtha ... | ditto |
| Dutta, Bembhushan ... | " Kasinath Vidyaratna ... | Chandsi, Barisal |
| Mukhopadhyaya, Ramrup . | " Jatindranath Dasgupta ... | Gaila, Barisal |
| Thakur, Suryakanta .. | " Kalibandhu Kavyatirtha .. | Joysirkat Batajore, Barisal |
| | **SMRITI** | |
| | ***Second Division.*** | |
| Bhattacharyya, Sureschandra .. | Pandit Madhusudan Smritiratna ... | Bijerpur, Barisal |
| | **SANKHYA.** | |
| | ***First Division*** | |
| Bhattacharyya, Bhudevchandra .. | Pandit Asutosh Kavyatirtha and " Aswini Kumar Kavyatirtha .. | Khalisakota, Barisal and Gaila Barisal. |
| | ***Second Division.*** | |
| Gupta, Ramanimohan Sen . | Pandit Jatindranath Das Gupta ... | Gaila, Barisal |
| | **SAMVEDA.** | |
| | ***Second Division*** | |
| Das, Sudhannyakumar .. | Pandit Baradakanta Vidyaratna ... | Unasia, Faridpur |
| Chakravarti, Lakshminarayan ... | " Kalidas Vidyavinode ... | Iswar Pathsala, Unasia, Barisal. |
| | **MIMANSA.** | |
| | ***Second Division.*** | |
| Chakravarti, Haricharan ... | Pandit Madhusudan Smritiratna ... | Bejorpath, Barisal |

## DHARMARAKSHINI SABHA, BARISAL.

| | | |
|---|---|---|
| | **KALAP.** | |
| | ***Second Division*** | |
| Bhattacharyya, Anantakumar .. | Pandit Ashutosh Kavyatirtha ... | Khalisakota, Barisal |
| Brahma, Jitendranath ... | " Chintaharan Smrititirtha ... | Kirtipasa, Barisal. |
| Chakravarti, Narayanchandra ... | " Chandracharan Tarkalankar ... | Krishnakathi, Barisal |
| Chattopadhyaya, Sitalchandra ... | " Ashutosh Kavyatirtha ... | Khalisakota, Barisal. |

## DHARMARAKSHINI SABHA, BARISAL—*concld.*

| Name of candidate. | Name of teacher. | Place of *tol* |
|---|---|---|
| | **KALAP—*concld.*** | |
| | ***Second Division.*** | |
| Das, Rashbihari ... | Pandit Chintaharan Smrititirtha ... | Kirtipasa, Barisal. |
| Gangopadhyaya, Bhubaneswar ... | „ Rajanimath Smrititirtha .. | Jalabari, Barisal. |
| Goswami, Sukhadeb ... | „ Basantakumar Kavyatirtha . | Gopalgunge, Faridpur. |
| Gupta, Indubhusan ... | „ Ashutosh Kavyatirtha ... | Khalisakota, Barisal |
| Mukhopadhyaya, Niranjan ... | „ Umeshchandra Das Gupta ... | Keindihar, Barisal |
| Ray, Manindranath ... | „ Ashutosh Kavyatirtha . | Khalisakota, Barisal. |
| | **MUGDHABODHA.** | |
| | ***Second Division*** | |
| Basu, Bhujangabhusan ... | Pandit Kishorimohan Basu Kavyatirtha ... | Pirojpur, Faridpur |
| Bhattacharyaya, Atalchandra .. | „ Binodebihari Smrititirtha .. | Amgram, Faridpur. |
| | **LAGHU KAUMUDI** | |
| | ***Second Division.*** | |
| Chakrabarti, Chittaranjan ... | Pandit Chintaharan Smrititirtha .. | Kirtipasa, Barisal |
| Chattopadhyay, Amritalal ... | „ ditto ... | ditto |
| Das, Aswinikumar ... | „ ditto ... | ditto |
| Ghoshal, Adharnath ... | „ ditto ... | ditto |
| Mukhopadhyaya, Gopalchandra ... | „ ditto ... | ditto |
| | **SARASWAT** | |
| | ***First Division.*** | |
| Mukhopadhyaya, Nibaranchandra ... | Pandit Chintaharan Smrititirtha . | Kirtipasa, Barisal. |
| | ***Second Division*** | |
| Bhattacharyya, Chandrakanta ... | Pandit Chintaharan Smrititirtha ... | Kirtipasa, Barisal. |
| „ Surendranath ... | „ Ashutosh Kavyatirtha ... | Khalisakota, Barisal. |
| Chakravarti, Anantakumar | „ Chintaharan Smrititirtha ... | Kirtipasa, Barisal |
| „ Binodelal ... | „ ditto .. | ditto |
| Gupta, Jitendranath ... | „ Sasikumar Tarkatirtha ... | Gabkhan, Jhalakati, Barisal |
| | **KAVYA.** | |
| | ***First Division.*** | |
| Gupta, Sudhirkumar Sen .. | Pandit Ashutosh Kavyatirtha ... | Khalisakota, Barisal |
| | ***Second Division.*** | |
| Chakravarti, Gopalgobinda ... | Pandit Harendranath Siddhantabhusan ... | Kamini Sundari Chatuspathi, Barisal. |
| „ Jitendranath ... | „ ditto ... | ditto |
| Gupta, Bankim Das ... | „ Ashutosh Kavyatirtha ... | Khalisakota, Barisal |
| „ Indubhusan Das ... | „ Harendranath Siddhantabhusan ... | Kamini Sundari Chatuspathi, Barisal. |
| Kaith, Rajendrachandra ... | Private. | |
| Mistri, Upendranath ... | Pandit Sasikumar Tarkatirtha ... | Gabkhan, Jhalakati, Barisal |
| Nath, Harekrishna ... | „ ditto ... | ditto. |
| | **PURAN,** | |
| | ***Second Division.*** | |
| Chakravarti, Hiralal ... | Pandit Banamali Nyayaratna .. | Kachua, Baisari, Barisal |
| | **SMRITI.** | |
| | ***Second Division.*** | |
| Bhattacharyya, Sibdas ... | Pandit Harendranath Siddhantabhusan ... | Kamini Sundari Chatuspathi, Barisal. |
| „ Taranath ... | „ Ramlal Smrititirtha ... | Bangram, Khulna. |

## HITAISHINI SABHA, IDILPUR.

| Name of candidate. | Name of teacher | Place of tol |
|---|---|---|
| **LAGHU KAUMUDI** | | |
| *Second Division.* | | |
| Bhattacharyya, Jagadishchandra | Pandit Janakinath Smrititirtha | Dhankathi, Faridpur. |
| Chakravarti, Harinath | " Sitanath Vyakarantirtha | Kethuri, Pamala, Noakhali. |
| **SARASWAT** | | |
| *First Division* | | |
| Bhattacharyya, Ramanikumar | Pandit Nagendrakumar Kavyatirtha | Boalhabari, Tippera. |
| *Second Division* | | |
| Barnik, Rajendrakumar | Pandit Nagendrakumar Kavyatirtha | Boalhabari, Tippera |
| Nath, Indrakumar | " Prabhatchandra Smritipanchanan | Gobindapur, Barisal. |
| **KALAP** | | |
| *First Division* | | |
| Bhattacharyya, Binodebandhu | Pandit Sitanath Vyakarantirtha | Kethuri, Pamala, Noakhali. |
| " Dharmendranath | " Kalimohan Smrititirtha | Singardaha, Faridpur. |
| Chakravarti, Jagadischandra | " Annadacharan Tarkabagisa | Mulgaon, Faridpur |
| " Ramanimohan | " Nagendrakumar Kavyatirtha | Boalhabari Tippera |
| " Surendrakumar | " Rajanikanta Vidyabhusan | Dighaldi, Boalhabari, Tippera |
| Chaudhury, Amulyacharan Ray | " Annadacharan Tarkabagisa | Mulgaon, Faridpur. |
| " Narendrachandra Ray | " ditto | ditto |
| Das Gupta, Sakhanath | " Parsanath Smriti Vyakarantirtha | Shahaspur, Barisal |
| Mukhopadhyaya, Pareshnath | " Annadacharan Tarkabagisa | Mulgaon, Faridpur. |
| *Second Division* | | |
| Bhattacharyya, Anadicharan | Pandit Harimohan Kabya Smrititirtha | Ganganagar, Gayghar, Faridpur. |
| " Manindramohan | " ditto | Ditto |
| Chakravarti, Harimohan | " Rajanikanta Vidyabhusan | Dirghaldi, Boalhabari, Tippera. |
| " Radhakrishna | " Harimohan Kavya Smrititirtha | Ganganagar, Gayghar, Faridpur |
| Chakravarti Thakur, Birendrakumar | " Syamacharan Smriti Vyakarantirtha | Bajapti, Tippera |
| Chattopadhyaya, Kalachand | " Pramathanath Smritibhusan | Madaripur, Faridpur |
| Datta, Manoranjan | " Syamacharan Smriti Vyakarantirtha | Bajapti, Tippera |
| " Srinath | " ditto | ditto |
| Karmakar, Bhubanmohan | " Annadacharan Tarkabagisa | Mulgaon, Gosainhat, Faridpur |
| " Nepalchandra | " ditto | ditto. |
| " Niranjan | " Syamacharan Smriti Vyakarantirtha | Bajapti, Tippera. |
| Rai Chaudhury, Manindramohan | " Annadacharan Tarkabagisa | Mulgaon, Gosainhat, Faridpur |
| Sil, Rajendrachandra | " Pramathanath Smritibhusan | Madaripur, Faridpur |
| **UPANISAD** | | |
| *Second Division* | | |
| Samajdar, Bamanchandra | Pandit Annadacharan Tarkabagisa | Mulgaon, Gosainhat, Faridpur |
| **SANKHYA** | | |
| *Second Division.* | | |
| Bhattacharyya, Suryyakanta | Pandit Rajanikanta Vidyabhusan | Dirghaldi, Boalhabari, Tippera. |
| **SAMA VEDA.** | | |
| *Second Division.* | | |
| Bandyopadhyaya, Mathuranath | Pandit Annadacharan Tarkabagisa | Mulgaon, Gosainhat, Faridpur |
| Basistha, Rohinikanta | " Prabhatchandra Smritipanchanan | Gobindapur, Barisal |
| Goswami, Haripada | " ditto | ditto. |

## DHARMA SABHA, MYMENSINGH.

| Name of candidate. | Name of teacher | Place of *tol* |
|---|---|---|
| | **KALAP.** | |
| | ***First Division.*** | |
| Bagchi, Shibkali | Pandit Durgasundar Tarkatirtha ... | Mymensingh |
| Bhattacharyya, Srinath | " Gaurgovinda Goswami ... | Behali, Sylhet |
| " Kshitishchandra ... | " Sureschandra Smrititirtha ... | Jasodal, Mymensingh |
| Chakravarti, Dines Chandra ... | " Revatiraman Vidyaratna and Baradakanta Vidyavinode ... | Sukhair, Sylhet |
| | ***Second Division.*** | |
| Acharyya, Narendrachandra ... | Pandit Harischandra Acharyya ... | Dwipeswar, Mymensingh. |
| Barua, Aswinikumar, I ... | " Bepinchandra Smritikantha ... | Narayankhila, Mymensingh |
| " Aswinikumar, II ... | " ditto ... | ditto |
| Bhattacharyya, Baradakanta .. | " Gaurgovinda Goswami .. | Behali Sylhet. |
| " Jnanendranath ... | " Kaminimohan Vidyalankar .. | Atharabari, Mymensingh |
| " Kalisaran ... | " Sureschandra Smrititirtha .. | Jasodal, Mymensingh |
| " Saileshchandra ... | " Narendrakisore Siddhantabhushan ... | Katihali, Mymensingh |
| " Surendrakumar ... | " Gaurgovinda Goswami ... | Behali, Sylhet. |
| Chakravarti, Aswinikumar ... | " Ganeschandra Kavyatirtha ... | Satpai, Mymensingh |
| " Birojakanta ... | " Chandrakisore Smritibhushan .. | Kanihari, Mymensingh |
| " Birendrachandra ... | " Kalichandra Smrititirtha ... | Panchpai, Mymensingh |
| " Devendranath ... | " Tarakchandra Kavya Vyakarantirtha | Muktagacha, Mymensingh |
| " Prafullakumar .. | " Moheschandra Sankhya Vyakarantirtha | Hatdehala, Mymensingh. |
| " Gajendrachandra ... | " Revatiraman Vidyaratna and Baradakanta Vidyavinode . | Sukhair, Sylhet |
| " Jatindrachandra .. | " ditto .. | Ditto |
| " Krishnaprasanna ... | " Rajendrachandra Smrititirtha ... | Masua, Mymensingh. |
| " Revatiraman .. | " Revatiraman Vidyaratna and Baradakanta Vidyavinode ... | Sukhair, Sylhet |
| " Surendrachandra .. | " Gangacharan Vidyanidhi . | Mymensingh |
| " Surendrachandra ... | " Ganeschandra Kavyatirtha ... | Satpai, Mymensingh. |
| Goswami, Jagatbandhu ... | " Krishnakumar Vidyavinode ... | Masua Mymensingh |
| Gupta, Dineschandra Sen .. | " Surendranath Smrititirtha .. | Isvargaon, Mymensingh |
| " Ganeschandra Sen ... | " Gangacharan Vidyanidhi ... | Mymensingh. |
| Pandit, Jogendramohan ... | " Brajendrachandra Kavyatirtha .. | Lakhia, Mymensingh. |
| Rai, Sochindramohan ... | " Durgasundar Tarkatirtha ... | Mymensingh |
| | **MUGDHABODHA** | |
| | ***Second Division.*** | |
| Acharyya, Radhikaranjan ... | Pandit Kasinath Kavyatirtha ... | Binafair, Mymensingh. |
| Bhattacharyya, Biswanath ... | " Durgasundar Vidyavinode ... | Sakuai, Mymensingh |
| Chakravarti, Monindrachandra ... | " Durgabandhu Kavyatirtha ... | Dubail, Mymensingh. |
| Sil, Sachindrachandra ... | " Navadwipchandra Bhaktivinode ... | Asma, Mymensingh. |
| | **LAGHA KAUMUDI.** | |
| | ***First Division*** | |
| Sarma, Sishirkumar ... | Pandit Surendramohan Sankhya Kavyatirtha ... | Algi, Dacca. |
| | ***Second Division.*** | |
| Bagchi, Sasisekhar ... | Pandit Moheschandra Sankhyatirtha ... | Hatdehala, Mymensingh. |
| Bhattacharyya, Abinashchandra ... | " Sureschandra Vidyanidhi ... | Jasodal, Mymensingh. |
| " Gangacharan ... | " Kalikrishna Siddhantashastri ... | Atharabari, Mymensingh. |
| " Haradas ... | " Devendranarayan Vidyabhushan ... | Jasodal, Mymensingh. |
| " Hemeschandra ... | " Kalikrishna Siddhantashastri ... | Atharabari, Mymensingh. |
| " Jagadischandra ... | " Narendrakisore Siddhantabhushan ... | Katihali, Mymensingh |
| " Srinibas .. | " Devendranarayan Vidyabhusan ... | Jasodal, Mymensingh. |
| Chakravarti, Kshetramohan ... | " Surendramohan Kavyatirtha ... | Algi, Dacca. |
| " Mathuranath ... | " Kaminimohan Vidyalankar ... | Atharabari, Mymensingh. |

## MYMENSINGH CENTRE—*concld.*

| Name candidate | Name of teacher | Place of *tol* |
|---|---|---|
| | **KAVYA** | |
| | *Second Division* | |
| Bhattacharyya, Haridas | Pandit Narendrakisore Siddhantabhushan | Katihali, Mymensingh |
| Chakravarti, Nalinikanta | " Kalikisore Siddhanta Shastri | Atharabari, Mymensingh |
| Chaudhuri, Hemeschandra | " Prasannanath Kavyabhushan | Jaipur Town, Mymensingh |
| | **SMRITI (*Ka*)** | |
| | *Second Division* | |
| Bhattacharyya, Dharanikumar | Pandit Harendrachandra Smrititirtha | Gauripur, Mymensingh |
| Chakravarti, Abinashchandra Kavyatirtha | " Mukundakisore Smritiratna | Adhistapara, Mymensingh |
| | **SAMA VEDA.** | |
| | *Second Division* | |
| Bhattacharyya, Asutosh | Pandit Girindranath Vedantaratna | Durgabari, Mymensingh |
| Chakravarti, Bharatchandra | " Gangacharan Vidyaratna | Mymensingh |
| " Chakradhar | " Girischandra Kavyaratna | Radhanathpur, Mymensingh. |
| Rai, Nripendrakisore | " Moheschandra Sankhyatirtha | Hatdihali, Mymensingh. |
| | **NYAYA (*Ka*).** | |
| | *First Division.* | |
| Bhattacharyya, Rameschandra | Pandit Kalikrishna Tarkatirtha | Gauripur, Mymensingh |
| | *Second Division* | |
| Bhattacharyya, Dineschandra | Pandit Kalikrishna Tarkatirtha | Gauripur, Mymensingh |
| " Durgasaday | " ditto | ditto |
| | **SANKHYA** | |
| | *Second Division* | |
| Bhattacharyya, Purnachandra | Pandit Kalikrishna Siddhanta Shastri | Atharabari, Mymensingh. |
| | **MIMANSA** | |
| | *Second Division.* | |
| Chakravarty, Dineschandra | Pandit Kalikrishna Tarkatirtha | Gauripur, Mymensingh |

## RANI HEMANTA KUMARI SANSKRIT COLLEGE, RAJSHAHI.

| | | |
|---|---|---|
| | **MUGDHABODHA.** | |
| | *First Division.* | |
| Chakravarty, Durgadas | Pandit Ramanikanta Siddhantaratna | Rani Hemanta Kumari Sanskrit College, Rajshahi |
| Sarkar, Manindranath | " Sivadas Kavyatirtha | Bonia, Rajshahi |
| | *Second Division.* | |
| Chakravarty, Jyotishchandra | Pandit Surendranath Kavya Vyakaranatirtha | Harina, Rajshahi. |

## RANI HEMANTA KUMARI SANSKRIT COLLEGE, RAJSHAHI—*concld.*

| Name of candidate | | Name of teacher | | Place of *tol* |
|---|---|---|---|---|
| | | **LAGHU KAUMUDI** | | |
| | | ***Second Division*** | | |
| Jha, Bhabataran | ... | Pandit Jasodhar Jha | ... | Araidanga, Maldah |
| Kumar, Satyendranath | ... | " ditto | ... | ditto |
| Misra, Jitendranath | .. | " ditto | ... | ditto |
| | | **SARASWAT** | | |
| | | ***Second Division*** | | |
| Mahanta, Gopeswardas | ... | Pandit Nerendrachandra Kavyatirtha | . | Natore, Rajshahi |
| | | **KAVYA** | | |
| | | ***Second Division*** | | |
| Goswami, Nikunjabehari | ... | Pandit Narendrachandra Kavyatirtha | ... | Natore, Rajshahi. |
| | | **VEDANTA** | | |
| | | ***Second Division*** | | |
| Bhattacharyya, Pulinbihari | ... | Pandit Ramkrishna Tarkatirtha | ... | Rani Hemanta Kumari Sanskrit College, Rajshahi. |
| | | **UPANISHAD** | | |
| | | ***Second Division.*** | | |
| Bhattacharyya, Girijapada | ... | Pandit Saratkumar Kavya Smrititirtha | ... | Kutubpur, Maldah |

## JNANADA SAMITI, PABNA

| | | | | |
|---|---|---|---|---|
| | | **LAGHU KAUMUDI** | | |
| | | ***First Division*** | | |
| Bhattacharyya, Jadunath | .. | Pandit Durgaprasanna Vidyabhusan | ... | Saraswat *tol*, Pabna |
| | | ***Second Division*** | | |
| Adhikari Radharaman | ... | Pandit Jajneswar Tarkaratna | ... | Tebaria, Nadia |
| Bhattacharyya, Sriram | ... | " Durgaprasanna Vidyabhusan | ... | Saraswat *tol*, Pabna |
| Chakravarty, Ajitnath | ... | " Jaminimath Smritibhusan | ... | Galaikhali, Pabna. |
| " Bhabanicharan | ... | " ditto | ... | ditto. |
| " Brajanath | ... | " ditto | ... | ditto. |
| " Gourgopal | ... | " Durgaprasanna Vidyabhusan | ... | Saraswat *tol*, Pabna |
| " Harshanath | .. | " Jaminimath Smritibhusan | ... | Galaikhali, Pabna |
| " Kalipada | ... | " ditto | ... | ditto. |
| " Prabhatchandra | ... | " ditto | ... | ditto. |
| Chanda, Makhanlal | ... | " ditto | ... | ditto |
| Mukhopadhyaya, Khagendranath | ... | " Jajneswar Tarkaratna | ... | Tebaria, Nadia. |
| | | **CHANDRIKA.** | | |
| | | ***First Division.*** | | |
| Chakravarty, Amiyanath | ... | Pandit Satinath Smrititirtha | ... | Daulatpur, Pabna |
| | | ***Second Division.*** | | |
| Chakravarty, Rebatikanta | ... | Pandit Taranath Saptatirtha | ... | Darsan *tol*, Pabna. |

## JNANADA SAMITI, PABNA—*concld.*

| Name of candidate. | Name of teacher | Place of *tol* |
|---|---|---|
| **KALAP** | | |
| *Second Division.* | | |
| Bandyopadhaya, Bhairabchandra ... | Pandit Jamunnath Smritibhusan ... | Galaikhali, Pabna |
| Bhattacharyya, Sudhindranath ... | „ Satinath Smrititirtha ... | Daulatpur, Pabna |
| Chakravarty, Bimalmadhab ... | Mahamohopadhaya Kailaschandra Kavya-Vyakarantirtha ... | Sirajgunje, Pabna. |
| „ Jadabchandra ... | Pandit Jamunnath Smritibhusan ... | Galaikhali, Pabna |
| **MUGDHABODHA** | | |
| *First Division* | | |
| Bhattacharyya, Priyanath .. | Pandit Taranath Saptatirtha ... | Darsan *tol*, Pabna |
| Pal, Abinaschandra ... | „ Satinath Smrititirtha . | Daulatpur, Pabna |
| Ray, Kalidas ... | „ Kailashchandra Sankhyatirtha ... | Sirajgunje, Pabna |
| **MUGDHABODHA** | | |
| *Second Division* | | |
| Acharyya, Jatindranath ... | Pandit Satinath Smrititirtha . | Daulatpur, Pabna |
| „ Nareschandra .. | „ Taranath Saptatirtha .. | Darsan *tol*, Pabna |
| Bhattacharyya, Brajagopal .. | „ Kumudbandhu Smriti Kavyatirtha . | Gauradahar, Pabna |
| „ Susilkumar ... | „ Basantakumar Shastri .. | Chatmahar, Pabna |
| Chakravarty, Hiralal ... | „ Bisweswar Vidyaratna .. | Sthal, Pabna |
| „ Narendranath ... | „ Kumudbandhu Smriti Kavyatirtha .. | Gauradaha, Pabna. |
| Das, Abanimohan .. | „ Taranath Saptatirtha .. | Darsan *tol*, Pabna. |
| „ Bharatchandra .. | „ Satinath Smrititirtha .. | Daulatpur, Pabna |
| Maitra, Jatindramohan ... | „ Basantakumar Shastri ... | Chatmahar, Pabna |
| „ Sureschandra ... | „ Satinath Smrititirtha ... | Daulatpur, Pabna |
| Sarbajna, Jagadishchandra .. | „ Bisweswar Vidyaratna ... | Sthal, Pabna |
| Sil, Jagadishchandra ... | „ ditto ... | Ditto Pabna |
| **KAVYA** | | |
| *Second Division* | | |
| Bandyopadhyaya, Santoshchandra ... | Mahamahopadhyya, Kailashchandra Sankhyatritha | Sirajgunge, Pabna |
| Bhattacharyya, Kshetranath ... | Pandit Bisweswar Vidyaratna .. | Sthal, Pabna |
| „ Manmathanath ... | „ Taranath Saptatirtha ... | Darsan *tol*, Pabna |
| Chakravarty, Nityagopal ... | „ ditto .. | ditto |
| „ Phanibhusan .. | „ Lalitkumar Sankhyatirtha ... | Pangsa, Faridpur. |
| Ray, Banikantha .. | „ Jamunnath Smritibhusan . | Galaikhali, Pabna |
| „ Kshetramohan .. | „ Bisweswar Vidyaratna .. | Sthal, Pabna. |
| **SANKHYA** | | |
| *Second Division* | | |
| Chakravarty, Kunjabihari ... | Pandit Taranath Saptatirtha ... | Darsan *tol*, Pabna. |
| Bhattacharyya, Haripada ... | „ ditto ... | ditto |
| **VEDANTA.** | | |
| *Second Division* | | |
| Kavyatirtha, Pramathanath ... | Pandit Satinath Smrititirtha ... | Daulatpur, Pabna. |
| **MIMANSA** | | |
| *Second Division* | | |
| Debsarma, Tarakripa ... | Pandit Taranath Saptatirtha ... | Darsan *tol*, Pabna. |

## JNANADA SAMITI, PABNA—*concld*

| Name of candidate | Name of teacher | Place of *tol* |
|---|---|---|
| | **SMRITI** | |
| | *Second Division* | |
| Bhattacharyya, Jibananda ... | Pandit Taranath Saptatirtha ... | Darson *tol*, Pabna |
| | **SAMAVEDA.** | |
| | *First Division* | |
| Bhattacharyya, Monoranjan ... | Pandit Durgaprasanna Vidyabhusan ... | Pabna |
| | *Second Division* | |
| Bhattacharyya Chakradhar ... | Pandit Kumudbandhu Kavya Smrititirtha ... | Ganradaha, Pabna |

## SANSKRIT SAMITI, NAOGAON.

| | | |
|---|---|---|
| | **LAGHU KAUMUDI** | |
| | *Second Division* | |
| Chakravarti, Ashutosh .. | Pandit Lalitmohan Smrititirtha . | Naogaon, Rajshahi |
| " Panchanan | ditto .. | ditto. |
| | **SARASWAT** | |
| | *Second Division* | |
| Adhikari, Hemchandra ... | Pandit Surendramohan Kavyatirtha ... | Naogaon, Rajshahi |
| Sarkar, Jogendranath .. | " Mahimchandra Vidyaratna .. | Narayanpur Joysurkati, Bogra. |
| | **KALAP** | |
| | *First Division.* | |
| Sarkar, Binodelal .. | Pandit Jaminimarayan Siddhanta Siromani | Khanjanpur, Bogra |
| | *Second Division* | |
| Chakravarti, Anadicharan .. | Pandit Gopalnath Tarkatirtha ... | Serpur, Bogra |
| " Sureshchandra ... | " Mahimchandra Vidyaratna ... | Narayanpur, Joypurhat, Bogra |
| | **SUPADMA** | |
| | *Second Division* | |
| Chakravarti, Harendramohan ... | Pandit Lalitmohan Smrititirtha ... | Naogaon, Rajshahi. |
| | **MUGDHABODHA** | |
| | *Second Division.* | |
| Bhattacharyya, Krishnachandra ... | Pandit Sasibhushan Smritiratna ... | Kashimpur, Rajshahi |
| Chakravarti, Jogendranath ... | " Mahimchandra Vidyaratna ... | Narayanpur, Bogra. |
| Dass, Satishchandra ... | " Srinibashkanta Kavya Vyakarantirtha | Jaloia, Bogra |
| Sarkar, Prabhashchandra ... | " Mahimchandra Vidyaratna ... | Narayanpur, Jaypur, Bogra |
| | **KAVYA** | |
| | *Second Division.* | |
| Bandyopadhyaya, Gangeshchandra ... | Pandit Ramanimohan Vidyaratna ... | Natore, Rajshahi. |
| Chakravarti, Haridas ... | " Lalitmohan Smrititirtha .. | Naogaon, Rajshahi |
| | **SMRITI.** | |
| | *Second Division* | |
| Kavyatirtha, Kumudikanta ... | Pandit Sasibhushan Smritiratna ... | Kashipur, Rajshahi. |

## SANSKRIT SAMITI, NAOGAON—*concld.*

| Name of candidate | Name of teacher | Place of tol. |
|---|---|---|
| | **VEDANTA.** | |
| | *Second Division* | |
| Goswami, Hrishikesh | Pandit Lahtmohan Smrititirtha | Naogaon, Rajshahi |
| | **UPANISAD** | |
| | *Second Division* | |
| Chakravarti, Harinath | Pandit Lahtmohan Smrititirtha | Naogaon, Rajshahi |
| | **SAM VEDA** | |
| | *Second Division* | |
| Bhattacharyya, Girindranath | Pandit Lahtmohan Smrititirtha | Naogaon, Rajshahi |
| Chakravarti, Upendrakumar | " ditto | ditto |

## DHARMA SABHA, RANGPUR.

| | | |
|---|---|---|
| | **MUGDHABODHA** | |
| | *Second Division* | |
| Bhattacharyya, Ashutosh | Pandit Sureshchandra Vachaspati | Janadanga, Utipur, Rangpur |
| " Nahiranjan | " ditto | ditto |
| Goswami, Brajendrakumar | " Lahtmohan Goswami Kavya Vyakaranatirtha | Mahiganja, Rangpur |
| | **SARASWAT** | |
| | *Second Division* | |
| Adhikari, Madhabchandra | Pandit Basantakumar Kavya Smrititirtha | Raikali, Bogra |
| Chakravarti, Madanmohan | " ditto | ditto |
| Changadhar, Hemchandra | " ditto | ditto |
| Dass, Lakshminarayan | " ditto | ditto |
| Mahanta, Kedarnath | " Iswarchandra Smrititirtha | Malatinagar, Bogra |
| Majumdar, Durjadhan | " Basantakumar Kavya Smrititirtha | Raikali, Bogra |
| Some, Bholanath | " Iswarchandra Smrititirtha | Malatinagar Bogra |
| | **KALAP** | |
| | *Second Division* | |
| Bhaduri, Jotsnasankar | Pandit Bhabaranjan Tarkatirtha | Rangpur. |
| Bhattacharyya, Kalachand | " Amarchandra Sankhyatirtha | Dinajpur. |
| " Kalipada | " Bhabaranjan Tarkatirtha | Rangpur |
| " Rameshchandra | " Ramkamal Sastri | Gaibandha, Rangpur |
| Das, Girishchandra | " Mahimchandra Smritibharati | Bhaitarbanda, Rangpur |
| Sarma, Burendramohan | " ditto | ditto |
| | **LAGHU KAUMUDI** | |
| | *Second Division* | |
| Chakravarti, Kamadasankar | Pandit Mahim Chandra Smritibharati | Bhaitarbanda, Rangpur |
| Pramanick, Kubirchandra | " Iswarchandra Smrititirtha | Malatinagar, Bogra |
| | **CHANDRIKA.** | |
| | *Second Division* | |
| Adhikari, Krishnakanta | Pandit Basantakumar Kavya Smrititirtha | Raikali, Bogra |
| Basak, Rajgobinda | " ditto | ditto |

## DHARMA SABHA, RANGPUR—*concld.*

| Name of candidate | Name of teacher | Place of *tol* |
|---|---|---|
| | **KAVYA** | |
| | *Second Division* | |
| Bhadurı, Nagendrakumar | Pandit Sureshchandra Vachaspati | Janardanga, Utipur, Rangpur |
| Bhattacharyya, Debnath | " Saradacharan Kabibhushan | Rajarampur, Dinajpur |
| | **SMRITI** | |
| | *Second Division* | |
| Chakravarti, Girijasankar | Pandit Mahimchandra Smrititirtha | Bhaitarband, Rangpur |
| | **PURAN** | |
| | *Second Division* | |
| Baksh, Kumudinikanta | Pandit Sureshchandra Vachaspati | Janardanga, Utipur, Rangpur |

## VIDYAVINODINI SABHA, CHITTAGONG.

| | | |
|---|---|---|
| | **CHANDRICA** | |
| | *Second Division* | |
| Acharyya, Anantalal | Pandit Tripuracharan Siromoni | Ea[illegible]zar, Chittagong |
| " Aparnacharan | " ditto | ditto. |
| Adhikari, Sarodakumar | " ditto | ditto |
| Bhattacharyya, Chandrakumar | " Rajanikanta Kavyatirtha | Sanskrit College, Chittagong |
| Chakravarti, Anadisankar | " Srinath Vidyaratna | Paraikora, Chittagong |
| " Jamini mohan | " ditto | ditto |
| " Niranjan | " ditto | ditto |
| Chaudhury, Amarendralal | " ditto | ditto |
| " Amulyagopal | " Kshitishchandra Kavyaratna | Sarala Sundari *tol*, Chittagong |
| " Sibaprasanna | " Tripuracharan Siromoni | Enathbazar, Chittagong |
| Dhar, Uttarkumar | " Srinath Vidyaratna | Paraikora, Chittagong |
| Gupta, Nikhilchandra Das | " ditto | ditto |
| Majumdar, Gangadhar | " ditto | ditto |
| " Upendrakumar | " Tripuracharan Siromoni | Enathbazar, Chittagong. |
| Ray, Ramlal | " Srinath Vidyaratna | Paraikora, Chittagong |
| | **SARASWAT CHANDRIKA** | |
| | *Second Division.* | |
| Ghosal, Dwijendranath | Pandit Kshitishchandra Kavyaratna | Sarala Sundari *tol*, Chittagong |
| Sen, Tejendranarayan | " ditto | ditto |
| | **SARASWAT** | |
| | *Second Division* | |
| Baidya, Phanindralal | Pandit Krishnakanta Kritiratna | Khitapchar, Chittagong |
| Bhattacharyya, Bhubaneswar | " Srinath Vidyaratna | Paraikora, Chittagong |
| " Sitalchandra | " ditto | ditto. |
| Biswas, Hariranjan | " ditto | ditto |
| " Nagendralal | " Krishnakanta Kritiratna | Khitapchar, Chittagong |
| Chakravarti, Bipinchandra | " Tripuracharan Siromoni | Enathbazar, Chittagong. |
| " Hrishikesh | " Rajanikanta Kavyatirtha | Sanskrit College, Chittagong |
| " Nagendralal | " Srinath Vidyaratna | Paraikora, Chittagong. |
| " Rajeswar | " Rajanikata Kavyatirtha | Sanskrit College, Chittagong |
| " Sachindralal | " Srinath Vidyaratna | Paraikora, Chittagong. |
| " Sachindranath | " Saratchandra Tarkatirtha | Municipal *tol*, Chittagong |
| Das, Niradbihari | " Mahimchandra Siromoni | Durgapur, Chittagong. |
| Dastidar, Nirendralal | " Rajanikanta Kavyatirtha | Sanskrit College, Chittagong |
| Khastgir, Niranjan | " Srinath Vidyaratna | Paraikora, Chittagong. |
| Nandi, Brajendralal | " Rajanikanta Kavyatirtha | Sanskrit College, Chittagong |
| Ray, Pareshnath | " Srinath Vidyaratna | Paraikora, Chittagong |
| Sen, Rabindranath | " ditto | ditto. |

## VIDYAVINODINI SABHA, CHITTAGONG—*contd.*

| Name of candidate | Name of teacher | Place of *tol* |
|---|---|---|
| **KALAP** | | |
| *First Division* | | |
| Chakravarti, Surendrakumar | Pandit Surendrakumar Tarkatirtha | Jagatpur Asram, Chittagong |
| " Surendramohan | " Srinath Vidyaratna | Paraikora, Chittagong |
| De, Sudhangsubikash | " Maheshchandra Vidyaratna | Anwara, Chittagong |
| Deb, Abanikumar | " Surendrakumar Tarkatirtha | Jagatpur Asram, Chittagong |
| *Second Division* | | |
| Acharyya, Prankrishna | Pandit Mahimchandra Siromani | Durgapur, Chittagong |
| Bhattacharyya, Debendranath | " Tripuracharan Siromani | Enathbazar, Chittagong |
| " Manindralal | " Atulananda Vidyanidhi | Anwara, Chittagong |
| " Nirendralal | " Maheshchandra Vidyaratna | ditto |
| Chakravarti, Basantakumar | " Mahimchandra Siromani | Durgapur, Chittagong |
| " Bimalacharan | " Srinath Vidyaratna | Paraikora, Chittagong |
| " Birendrakumar | " Mahimchandra Siromani | Durgapur, Chittagong |
| " Debendrakumar | " Surendrakumar Tarkatirtha | Jagatpur Asram, Chittagong |
| " Jajneswar | " Krishnakanta Kritiratna | Khitapchar, Chittagong |
| " Jitendranath | " Maheshchandra Vidyaratna | Anwara, Chittagong |
| " Krishnachandra | " ditto | ditto |
| " Manindralal | " Atulananda Vidyanidhi | Ramkrishna Asram, Chittagong |
| " Rebatiranjan | " Maheshchandra Vidyaratna | Anwara, Chittagong |
| " Sanatan | " Tripuracharan Siromani | Enathbazar, Chittagong |
| " Saratchandra | " Mahimchandra Siromani | Durgapur, Chittagong. |
| " Surendralal | " Prasannakumar Smritiratna | Jujkhola, Chittagong |
| Chaudhury, Dineshchandra | " Maheshchandra Vidyaratna | Anwara, Chittagong |
| " Khagendralal | " Prasannakumar Smritiratna | Jujkhola, Chittagong |
| " Nirmalchandra | " Maheshchandra Vidyaratna | Anwara, Chittagong |
| Das, Narendralal | " Rajanikanta Kavyatirtha | Sanskrit College, Chittagong |
| " Parbaticharan | " Prankrishna Vidyaratna | Charbadu, Noakhali |
| Dastidar, Dhirendralal | " Rajanikanta Kavyatirtha | Sanskrit College, Chittagong |
| Datta, Jagatbandhu | " Tripuracharan Siromani | Enathbazar, Chittagong |
| De, Ambikacharan | " Maheshchandra Vidyaratna | Anwara, Chittagong |
| " Jagatchandra | " ditto | ditto |
| " Nibaran | " ditto | ditto |
| " Sadananda | " ditto | ditto |
| " Tripuracharan | " Bamacharan Smrititirtha | Fateabad, Chittagong |
| Kanongoe, Bimalchandra | " Tripuracharan Siromani | Enathbazar, Chittagong |
| Nandi, Bibhutibhusan | " Surendrakumar Tarkatirtha | Jagatpur Asram, Chittagong |
| Parial, Madhabananda | " Tripuracharan Siromani | Enathbazar, Chittagong |
| Rudra, Manomohan | " Maheshchandra Vidyaratna | Anwara, Chittagong |
| **LAGHU KAUMUDI** | | |
| *First Division* | | |
| Chaudhury, Jatindrakumar | Pandit Kshitishchandra Kavyaratna | Saralasundari *tol*, Chittagong |
| *Second Division* | | |
| Bhattacharyya, Sachinath | Pandit Saratchandra Tarkatirtha | Municipal *tol*, Chittagong |
| Chakravarti, Annadacharan | " Tripuracharan Siromani | Enathbazar, Chittagong |
| " Dhirendrakumar | " ditto | ditto |
| " Debendralal | " Rajanikanta Kavyatirtha | Sanskrit College, Chittagong |
| " Jaminikanta | " Kalikrishna Tarkapanchanan | ditto |
| " Janakinath | " Rajanikanta Kavyatirtha | ditto |
| " Jyotishchandra | " ditto | ditto |
| Chaudhury, Bhagabanchandra | " Kshitishchandra Kavyaratna | Saralasundari *tol*, Chittagong |
| Das, Trailokyanath | " ditto | ditto |
| Gupta, Sachindramohan Datta | " ditto | ditto |
| Khastgir, Susilkumar | " ditto | ditto |
| Sen, Binaykumar | " ditto | ditto |
| **KAVYA** | | |
| *Second Division* | | |
| Bhattacharyya, Dhirendranath | Pandit Surendrakumar Tarkatirtha | Jagatpur Asram, Chittagong |
| " Prafullakumar | " Saratchandra Tarkatirtha | Municipal *tol*, Chittagong |
| " Pratapchandra | " Srinath Vidyaratna | Paraikora, Chittagong |

## VIDYAVINODINI SABHA, CHITTAGONG—*concld.*

| Name of candidate | Name of teacher | Place of *tol* |
|---|---|---|
| | **KAVYA—*concld*** | |
| | ***Second Division.*** | |
| Chakravarti, Birendrakishore ... | Pandit Mahimchandra Siromani ... | Durgapur, Chittagong |
| " Pratapchandra | " Kalikinkar Tarkapanchanan | Sanskrit College, Chittagong |
| " Radhakrishna . | " ditto ... | ditto. |
| Mahalanobis, Dhirajmohan . | " Srinath Vidyaratna ... | Paraikora, Chittagong |
| Ray, Kshetramohan ... | " Tripuracharan Siromani .. | Enathbazar, Chittagong |
| | **VEDANTA** | |
| | ***Second Division*** | |
| Chakravarti, Manindrachandra . | Pandit Saratchandra Tarkatirtha .. | Municipal *tol*, Chittagong |
| | **SANKHYA** | |
| | ***Second Division*** | |
| Kanungoe, Manindralal | Pandit Ramsankar Sankhyatirtha .. | Sanskrit College, Chittagong |
| | **SAMA VEDA** | |
| | ***Second Division*** | |
| Bhattacharyya, Bamandas ... | Pandit Baradacharan Smrititirtha .. | Sitakunda, Chittagong |
| " Ramanimohan . | " Atulananda Vidyanidhi ... | Anwara, Chittagong |
| | **PALI SUTTA PITAK** | |
| | ***Second Division*** | |
| Barua, Bhangalal .. | Pandit Dharmananda Vikshu . | Rangunia, Chittagong |
| " Sukhadaprasad . | " Dharmaratna Vikshu .. | Rajabhaban, Chittagong |
| Sukhenchandra .. | " ditto . | ditto |
| Sraman, Harmani . | " ditto ... | ditto |

## JNANADAYINI SABHA, PATIYA

| | | |
|---|---|---|
| | **SARASWAT** | |
| | ***Second Division*** | |
| Bhattacharyya, Bankanta .. | Pandit Kalikanta Smrititibhusan ... | Bhatikhain, Chittagong |
| Chakravarty, Kasinath ... | " Nagendrachandra Smrititirtha .. | Shyam Ray's Hat, Saroatali, Chittagong |
| " Taracharan ... | " Purnachandra Smrititratna .. | Dheoa, Raojan, Chittagong |
| Pal, Hirendralal ... | " Kalikanta Smrititibhusan ... | Bhatikhain, Chittagong |
| | **KALAP** | |
| | ***First Division*** | |
| Chaudhury, Nangopal .. | Pandit Bagalacharan Kavyatirtha .. | Patiya, Chittagong |
| | ***Second Division.*** | |
| Acharyya, Ambikacharan .. | Pandit Surendralal Smrititirtha ... | Alampur, Chittagong. |
| Arch, Monmohon ... | " Nagendrachandra Smrititirtha ... | Shyam Ray's Hat, Saroatali, Chittagong. |
| Bhattacharyya, Aswinikumar ... | " Kalikanta Smrititibhusan ... | Bhatikhain, Chittagong. |
| " Bireswar ... | " Kamalakanta Kavyatirtha ... | Suchakradandi, Chittagong |
| " Harikishore ... | " Binodebikash Nyayatirtha ... | Shuchia, Chittagong. |
| " Jagatkrisna ... | " Kalikanta Smrititibhusan ... | Bhatikhain, Chittagong. |
| " Jogendrabijay .. | " Nagendrachandra Smrititirtha ... | Shyam Ray's Hat, Saroatali, Chittagong. |
| " Manindralal ... | " Jagatbandhu Tarkabagis ... | Ranchana, Chittagong |
| " Manmathanath ... | " Bagalacharan Kavyatirtha ... | Patiya, Chittagong. |
| " Tarakchandra ... | " Binodebikash Nyayatirtha ... | Shuchia, Chittagong. |

## JNANADAYINI SABHA, PATIYA—*concld.*

| Name of candidate | Name of teacher. | Place of *tol* |
|---|---|---|
| | **KALAP** | |
| | *Second Division* | |
| Biswangri, Rebatiraman | Pandit Bagalacharan Kavyatirtha | Patiya, Chittagong |
| Chakravarty, Binodebihari | " Ramchandra Smrititirtha | Raujan, Chittagong |
| " Bidhubhusan | " Bipinbihari Kavyatirtha | Sripur, Chittagong |
| " Dhirendralal | " Mahendralal Kritisromani | Rajanagar, Chittagong. |
| " Jatindralal | " Nagendrachandra Smrititirtha | Shyam Ray's hât Saroatali, Chittagong |
| " Jatindralal | " Binodebikash Nyayatirtha | Shuchia, Chittagong |
| " Rabindraranjan | " Kalikanta Smritibhusan | Bhatikhain, Chittagong |
| " Ramchandra | " Bagalacharan Kavyatirtha | Patiya, Chittagong |
| " Sasadhar | " Surendralal Smrititirtha | Alampur, Chittagong |
| Chaudhury, Arabinda | " Bagalacharan Kavyatirtha | Patiya, Chittagong |
| " Birajchandra | " Surendrakumar Kavyatirtha | Anwara, Chittagong |
| " Kunjabihari | " Nagendrachandra Smrititirtha | Shyam Ray's hât, Saroatali, Chittagong |
| " Nirmalchandra | " ditto | ditto |
| " Sasadharbrahman | " Binodbekash Nyayatirtha | Shuchia, Chittagong |
| " Sukhendubikash | " Kamalakanta Kavyatirtha | Suchakradandi, Chittagong |
| Das, Niroderanjan | " Bagalacharn Kavyatirtha | Patiya, Chittagong |
| Datta, Devendralal | " ditto | ditto |
| Guha, Phanibhusan | " ditto | ditto |
| Gupta, Rameshchandra | " Kamalakanta Kavyatirtha | Suchakradandi, Chittagong |
| Mazumdar, Birendralal | " Nandakumar Smritiratna | Joara, Chittagong |
| " Rabendranath Sen | " Binodebikash Nyayatirtha | Shuchia, Chittagong |
| Pal, Nirmalchandra | " Kalikanta Smritibhusan | Bhatikhain, Chittagong |
| " Rajkumar | " Bagalacharan Kavyatirtha | Patiya, Chittagong |
| Palit, Dhirendralal | " Purnachandra Smrititirtha | Dheon, Chittagong |
| Sabhasamudaryya, Ramanimohon | " Nagendrachandra Smrititirtha | Shyam Ray's Hat, Saroatali, Chittagong. |
| Sarma, Harishchandra | " Umacharan Tarkaratna | Kalisahar, Chittagong |
| Sarmacharyya, Annadacharan | " Binodebikash Nyayatirtha | Shuchia, Chittagong |
| Waddadar, Hridayranjan | " Kalikanta Smritibhusan | Bhatikhain, Chittagong |
| | **SANKSHIPTASARA.** | |
| | *Second Division* | |
| Bhattacharyya, Sudhansubemal | Pandit Surendralal Smrititirtha | Alampur, Chittagong |
| | **SUPADMA** | |
| | *Second Division* | |
| Acharyya, Radhakrisna | Pandit Nagendralal Smrititirtha | Shyam Ray's Hat, Saroatali, Chittagong |
| Chakravarty, Devendralal | " Surendralal Smrititirtha | Alampur, Chittagong |
| | **MUGDHABODHA** | |
| | *Second Division* | |
| Banik, Ramanimohan | Pandit Ramchandra Smrititirtha | Sultanpur, Chittagong |
| Bhattacharyya, Biswanath | " Kalikanta Smritibhusan | Bhatikhain, Chittagong. |
| Chakravarty, Jogendrachandra (II) | " ditto | ditto. |
| De, Debendralal | " Bagalacharan Kavyatirtha | Patiya, Chittagong |
| Sen, Saileudralal | " ditto | ditto. |
| | **KAVYA** | |
| | *Second Division* | |
| Bhattacharyya, Shyamacharan | Pandit Bagalacharan Kavyatirtha | Patiya, Chittagong |
| Chakravarty, Nikunjabihari | " Umacharan Tarkaratna | Kalisahar, Chittagong. |
| Das, Bangshimohan | " Kalikanta Smrititirtha | Bhatikhain, Chittagong. |
| | **SMRITI** | |
| | *Second Division* | |
| Chakravarty, Ashutosh | Pandit Umacharan Tarkaratna | Kalisahar, Chittagong. |
| Vyakaranatirtha, Suryyamohan | " ditto | ditto. |

## SUHRID SAMMILANI SABHA, NOAKHALI.

| Name of candidate | Name of teacher | Place of *tol.* |
|---|---|---|
| | **LAGHU KAUMUDI** | |
| | *First Division* | |
| Nath, Ramanimohan ... | Pandit Saradacharan Kavyaratna ... | Mangalkandi, Noakhali |
| | *Second Division* | |
| Chakravarti, Manomohan ... | Pandit Saradacharan Kavyatirtha ... | Mangalkandi, Noakhali |
| Dasgupta, Amiyabhusan ... | " ditto .. | ditto |
| Pal, Atindrakumar ... | " ditto ... | ditto. |
| | **SARASWAT** | |
| | *Second Division.* | |
| Acharyya, Sachindrakumar ... | Pandit Baikunthachandra Kavya Vyakaran tirtha . | Begamganj, Noakhali |
| Basu, Sudhiranjan . | " ditto .. | ditto |
| Chakravarti, Binodebihari .. | " Jasodakumar Smriti Vyakarantirtha and Ashutosh Sankhya Vedantatirtha ... | Noakhali, Noakhali |
| " Jitendrakumar .. | ditto ... | ditto |
| " Manoranjan . | Pandit Baikunthachandra Kavya Vyakarantirtha .. | Begumganj, Noakhali |
| Ray, Nagendrakumar | " Saradacharan Smriti Vyakarantirtha | Babupur, Noakhali |
| | **KALAP** | |
| | *First Division.* | |
| Acharyya, Haripada | Pandit Saradacharan Kavyaratna . | Mangalkandi Noakhali. |
| | *Second Division.* | |
| Acharyya, Anadiprasanna ... | Pandit Debendranath Siddhantabhusan . | Sondalpur, Noakhali |
| " Bipinbihari . | " Nandakumar Vidyabinode ... | Bijaypur Noakhali |
| " Kalimohan | " Kaliprasanna Vidyanidhi . | Khilpara, Noakhali |
| " Kalimohan . | " Kurunath Vyakaran Nyayatirtha .. | Feni, Noakhali |
| " Sureshchandra ... | " Surendrachandra Smriti Vyakarantirtha .. | Babupur, Noakhali |
| " Trinathprasanna ... | " Kaliprasanna Vidyanidhi .. | Khilpara, Noakhali |
| Adhikari, Radhakanta ... | " Indrakumar Vidyaratna . | Bhanu, Noakhali |
| Bhattacharyya, Mahimmohan . | " Kurunath Vyakaran Nyayatirtha ... | Feni, Noakhali |
| Chakravarti, Adinath . | " Surendrachandra Smriti Vyakarantirtha ... | Babupur, Noakhali. |
| " Basantakumar . | " Jamininath Siddhanta Vachaspati and Anandamaya Vyakarantirtha ... | Ghoshkanta, Noakhali |
| " Jadabchandra . | " Kurunath Vyakaran Nyayatirtha .. | Feni, Noakhali. |
| " Jibanhari ... | " Jasodakumar Smriti Vyakarantirtha and Ashutosh Sankhya Vedantatirtha | Noakhali, Noakhali |
| " Madhabchandra ... | " Surendrachandra Smriti Vyakarantirtha ... | Babupur, Noakhali |
| " Rabindrakumar .. | " Saradacharan Kavya Vyakarantirtha | Sonachaka, Noakhali. |
| " Radhakamohan ... | " Saratchandra Kavyatirtha ... | Raipura, Noakhali. |
| " Upendrachandra .. | " Jasodakumar Smriti Vyakarantirtha and Ashutosh Sankhya Vedantatirtha ... | Noakhali, Noakhali |
| Gupta, Ramkanai Das .. | " Saradacharan Kavya Vyakarantirtha | Sonachaka, Noakhali. |
| " Sachindrakumar Das ... | " Mahendrachandra Kavyatirtha .. | Sripur, Nandigram, Noakhali. |
| Majumdar, Kshitishchandra ... | " Surendrachandra Smriti Vyakarantirtha ... | Babupur, Noakhali |
| " Prakashchandra | " Nandakumar Vidyabinode ... | Bijaypur, ditto. |
| " Rameshchandra ... | " Kaliprasanna Vidyanidhi ... | Khilpara, ditto. |
| Nath, Basantakumar ... | " Jasodakumar Smriti Vyakarantirtha and Ashutosh Sankhya Vedantatirtha .. | Noakhali, Noakhali. |
| Ray, Sitanath ... | " Nabinchandra Nyayapanchanan ... | Tarakucha, Noakhali |
| Sil, Binodebehari ... | " ditto ... | ditto. |
| | **KAVYA** | |
| | *Second Division.* | |
| Chakravarti, Dhirendranath ... | Pandit Jasodakumar Smriti Vyakarantirtha and Ashutosh Sankhya Vedantatirtha ... | Noakhali, Noakhali. |

## SUHRID SAMMILANI SABHA, NOAKHALI—*concld*

| Name of candidate | Name of teacher | Place of *tol* |
|---|---|---|
| | **SMRITI (*Ka*)** | |
| | ***Second Division*** | |
| Acharyya, Janakinath | Pandit Jasodakumar Smriti Vyakarantirtha and Ashutosh Sankhya Vedanta tirtha | Noakhali, Noakhali |
| Chakravarti, Gopalkrishna | ,, ditto | ditto |
| | **VEDANTA** | |
| | ***Second Division*** | |
| Chakravarti, Ramanimohan | Pandit Jasodakumar Smriti Vyakarantirtha and Ashutosh Sankhya Vedanta tirtha | Noakhali, Noakhali |
| | **JYOTISH** | |
| | ***Second Division*** | |
| Acharyya Jogeshchandra | Pandit Nandakumar Vidyabinode | Bijaypur, Noakhali |
| | **SAMA VEDA** | |
| | ***Second Division*** | |
| Chakravarti, Rameshchandra | Pandit Saradacharan Kavyatirtha | Sonachaka, Noakhali |

## DHARMA SAMITI, COMILLA.

| Name of candidate | Name of teacher | Place of *tol* |
|---|---|---|
| | **LAGHU KAUMUDI** | |
| | ***First Division*** | |
| Chakravarti, Durgacharan | Pandit Sureshchandra Kavyatirtha | Comilla, Tippera |
| | ***Second Division*** | |
| Acharyya, Chandrakumar | Pandit Rajanikanto Vyakarantirtha | Kangai, Tippera |
| Adhikari, Anandachandra | ,, Kasichandra Kaviratna | Pachthupi, Tippera |
| Bir, Jagadbandhu | ,, Rajanikanta Vyakarantirtha | Kangai, Tippera |
| Chakravarti, Binaykrishna | ,, Sureshchandra Kavyatirtha | Comilla, ditto |
| ,, Pyarimohan | ,, ditto | ditto |
| Pal, Harachandra | ,, Rajanikanta Vyakarantirtha | Kangai, Tippera |
| Sarma, Nilmadhab | ,, ditto | ditto. |
| | **SARASWAT** | |
| | ***Second Division.*** | |
| Acharyya, Chandramohan | Pandit Pratapchandra Vyakarantirtha | Kangai, Tippera |
| Adhikari, Dinabandhu | ,, Rajanikanta Vyakarantirtha | ditto |
| Bhattacharyya, Ramakshaya | ,, Sureshchandra Kavyatirtha | Comilla, Tippera |
| ,, Sureshchandra | ,, ditto | ditto |
| Chakravarti, Rajanikanta | ,, Sureshchandra Vyakarantirtha | Mehari, Tippera |
| ,, Ramanimohan | ,, Sureshchandra Kavyatirtha | Comilla, ditto |
| Deb, Jatindralal | ,, ditto | ditto |
| | **MUGDHABODHA.** | |
| | ***Second Division*** | |
| Chakravarti, Kaminikumar | Pandit Pratapchandra Vyakarantirtha | Kangai, Tippera |
| ,, Saratchandra | ,, Surendrachandra Vyakarantirtha | Mehari, ditto. |

## DHARMA SAMITI, COMILLA—*concld.*

| Name of candidate | Name of teacher | Place of *tol.* |
|---|---|---|
| **KALAP** | | |
| *First Division* | | |
| Bhattacharyya, Gurubandhu | Pandit Suryyakumar Smrititirtha | Comilla, Tippera. |
| Chakravarti, Apurbachandra | " ditto | ditto |
| " Haradayal | " ditto | ditto |
| " Nisikanta | " Akhilchandra Vidyarnab | Madhyakhanda, Tippera |
| " Pulinbihari | " Suryyakumar Smrititirtha | Comilla, Tippera. |
| " Sureshchandra | " ditto | ditto |
| Chaudhury, Samarendramohan | " ditto | ditto |
| *Second Division* | | |
| Acharyya, Abinashchandra | Pandit Gobindachandra Vidyanidhi | Dotala, Tippera |
| Adhikari, Jaychandra | " Sureshchandra Kavyatirtha | Comilla, Tippera |
| " Sudhangsubhusan | " Rajanikanta Smritiratna | Gopinathpur, Chittagong |
| Banik, Debendrakumar | " ditto | ditto |
| " Sachindrakumar | " Benudhar Tarkatirtha | Uddhar, Tippera |
| Bhattacharyya Kalachand | " Suryyakumar Smrititirtha | Comilla, Tippera |
| " Nagendrachandra | " Sureshchandra Kavyatirtha | ditto |
| " Narendrakumar | " Rajanikanta Smritiratna | Gopinathpur, Chittagong. |
| Chakravarti, Kalibar | " Benudhar Tarkatirtha | Uddhar, Tippera. |
| " Nalinmohan | " Dwarakanath Vidyanidhi | Aynatali, Tippera |
| " Nibaranchandra | " Suryyakumar Smrititirtha | Comilla, Tippera. |
| " Pratulkumar | " ditto | ditto |
| " Satyendrachandra | " Annadacharan Vyakarantirtha | Tamrasasan, Tippera |
| De, Chandranath | " Sasimohan Vidyabinode | Ghalpasa, Tippera |
| " Sitalchandra | " Benudhar Tarkatirtha | Uddhar, Tippera |
| Deb, Bidhubhusan | " Rajanikanta Smritiratna | Gopinathpur, Chittagong |
| Gun, Bimalacharan | " ditto | ditto |
| Nag, Jogendranath | " ditto | ditto |
| Ray, Sisirkumar | " ditto | ditto |
| Sarma, Anathbandhu | " Annadacharan Vyakarantirtha | Tamrasasan, Tippera |
| " Gobindachandra | " Purnachandra Kavyatirtha | Kasadda, Tippera |
| " Nityahari | " Sureshchandra Kavyatirtha | Comilla, Tippera |
| " Radhamadhab | " Annadacharan Vyakarantirtha | Tamrasasan, Tippera |
| Sil, Baikunthakumar | " Sailendrachandra Vyakarantirtha | Maykhar Tippera. |
| **PRAKRIYA KAUMUDI** | | |
| *First Division* | | |
| Chakravarti, Harimohan | Pandit Sureshchandra Kavyatirtha | Comilla, Tippera |
| *Second Division* | | |
| Chakravarti Rohinikanta | Pandit Sureshchandra Kavyatirtha | Comilla, Tippera |
| **KAVYA** | | |
| *Second Division* | | |
| Chakravarti, Manindranath | Pandit Kulatosh Vyakarantirtha | Sonamura, Tippera |
| Sarma, Rashimohan | " Sureshchandra Kavyatirtha | Comilla, Tippera. |
| **SAMA VEDA** | | |
| *Second Division* | | |
| Vyakarantirtha, Brajendrachandra | Pandit Kasichandra Kaviratna | Panchthupi, Comilla, Tippera. |

## VIDYOTSAHINI SABHA, BRAHMANBERIA.

### LAGHU KAUMUDI.

| | | |
|---|---|---|
| *Second Division.* | | |
| Bhattacharyya, Kaibalyanath | Pandit Sachindranath Vidyalankar and Harendranath Vidyabinode | Kalikachha, Tippera. |
| " Ramankrishna | " ditto | ditto. |
| Goswami, Narmadakumar | " ditto | ditto |

## VIDYOTSAHINI SABHA, BRAHMANBERIA—*concld.*

| Name of candidate. | Name of teacher. | Place of *tol*. |
|---|---|---|
| **SARASWAT** | | |
| *Second Division* | | |
| l, Kalikumar | Pandit Rajanikanta Nayayaratna | Rasullabad, Tippera |
| **KALAP.** | | |
| *Second Division.* | | |
| charyya, Bhabanikanta | Pandit Sachindranath Vidyalankar and Harendranath Vidyabinode | Kalikachha, Tippera |
| " Bhagabanchandra | " Narendrachandra Kavyatirtha | Paltan, Tippera |
| attacharyya, Bankimchandra | " Harendrachandra Kavyatirtha | Medda, Tippera. |
| " Hirendrachandra | " ditto | ditto |
| " Khagendranath | " ditto | ditto. |
| " Rajanikanta | " Surendrachandra Tarkasastri | Bezura, Sylhet |
| " Rameshchandra | " Rajanimohan Smritibhusan | Baniachang, Sylhet |
| " Ranajakumar | " Harendrachandra Kavyatirtha | Medda, Tippera |
| " Subodhchandra | " ditto | ditto |
| " Umeshchandra | " Rajanikanta Nyayaratna | Rasullabad, Tippera |
| akravarti, Prabodhchandra | " Pratapchandra Smritibhusan | Brahmanberia, Tippera |
| atta, Debendrakumar | " Harendrachandra Kavyatirtha | Medda, Tippera |
| " Narendramohan | " ditto | ditto |
| rma, Jaminikumar | " Rajanimohan Smritibhusan | Baniachang, Sylhet |
| **MUGDHABODHA** | | |
| *Second Division* | | |
| hattacharyya, Birendrachandra | Pandit Narendrachandra Kavyatirtha | Paltan, Tippera |
| **KAVYA** | | |
| *Second Division.* | | |
| hattacharyya, Kaliprasanna | Pandit Chandrakanta Nyayaratna | Sahapur, Tippera |
| " Nabadwipchandra | " Akshayakumar Smritibhusan | Jethagram, Tippera |
| hakravarti, Gopendrachandra | " Bidhubhusan Kavyatirtha | Jalsukha, Sylhet. |
| **NYAYA (*Kha*).** | | |
| *Second Division* | | |
| hattacharyya, Jnanadacharan | Pandit Chandrakishore Nyayaratna | Sahapur, Tippera |
| **SAMA VEDA** | | |
| *Second Division* | | |
| hattacharyya, Rajanikanta | Pandit Chandrakishore Nyayaratna | Sahapur, Tippera |
| " Sunilkumar | " Rashmohan Smritibhusan | Agartala, Tippera |

## DARJEELING HIGH SCHOOL CENTRE.

| | | |
|---|---|---|
| **KALAP** | | |
| *Second Division.* | | |
| ar, Sachindrakumar | Pandit Balaram Ojha Kavyatirtha | Darjeeling. |
| **SARASWAT CHANDRICA.** | | |
| *Second Division.* | | |
| Bhup Bahadur | Pandit Balarama Ojha Kavyatirtha | Darjeeling |
| Mailu Sinha Rai | " ditto | ditto. |

## TARINIPREYA SANSKRIT SAMITI, GAURIPUR.

| Name of candidate | Name of teacher. | Place of *tol* |
|---|---|---|
| | **PRAYOGRATNAMALA** | |
| | ***First Division*** | |
| Chakravarti, Pankajlochan | Pandit Ramanath Vidyalankar | Gauripur, Assam |
| Goswami, Charuchandra Dev | " ditto | ditto |
| Sarma, Jadavchandra | " ditto | ditto. |
| | ***Second Division*** | |
| Bhagabati, Dugdhanath | Pandit Ramanath Vidyalankar | Gauripur, Assam |
| | **KAVYA** | |
| | ***Second Division.*** | |
| Bhattacharyya, Dhirayyanath | Pandit Ramanath Vidyalankar | Gauripur, Assam |
| Devi, Srimati Amala | " Saranan Tarkatirtha | ditto |
| Goswami, Haragovinda Dev | " Ramanath Vidyalankar | ditto |
| | **SMRITI.** | |
| | ***Second Division*** | |
| Sarma, Durgakanta | Pandit Ramanath Vidyalankar | Gauripur, Assam |
| Vyakarantirtha, Dhireswar | " Saranan Nyayatarkatirtha | ditto |

## PRACHYA SIKSHA PARISHAD, SILCHAR

| | | |
|---|---|---|
| | **SARASWAT** | |
| | ***Second Division.*** | |
| Singha, Babudhan | Pandit Chaitanyamohan Kavyatirtha | Ghoramara, Sylhet |
| " Bhuban | " ditto | ditto |
| " Nabakumar | " ditto | ditto |
| " Krishnababa | " ditto | ditto |
| | **KALAP** | |
| | ***Second Division*** | |
| Dasamukhya, Pulinchandra | Pandit Suryakumar Tarkasaraswati | Silchar |
| | **KAVYA** | |
| | ***Second Division*** | |
| Bhattacharyya, Rakesranjan | Pandit Brajanath Smrititirtha | Kamargaon, Sylhet |
| Chaudhuri, Bibhutibhushan Laskar | " Rebatiraman Tarkaratna | Kayesthagram, Sylhet. |

## SANSKRIT SANJIVAN SABHA, NALBARI.

| | | |
|---|---|---|
| | **PRAYOGRATNAMALA.** | |
| | ***First Division*** | |
| Bhagabati, Bhabadeb | Pandit Gopalchandra Smriti Tarka Vyakaranatirtha | Kanthalkuchi, Kamrup |
| Bhattacharyya, Raghunath | " ditto | ditto. |
| Chakravarti, Rameswar | " ditto | ditto. |
| Goswami, Jagannath | " Sanapati Vidyabagisa | Atgharia, Kamrup. |
| Misra, Hareswar | " Panchanan Vyakarantirtha | Bangaon, Kamrup. |
| Sarma, Dharmanath | " Sambhunath Sastri Smriti Vyakarantirtha | Bahajani, Kamrup |

## SANSKRIT SANJIVAN SABHA, NALBARI—*concld.*

| Name of candidate | Name of teacher | Place of *tol.* |
|---|---|---|
| | **PRAYOGRATNAMALA—*concld.*** | |
| | ***Second Division*** | |
| Bhattacharyya, Hareswar ... | Pandit Biswanath Smriti Bhagabatvagisa ... | Haridanga, Tihu, Kamrup |
| Chakravarti, Ganeswar .. | " Panchanan Vyakarantirtha | Bangaon, Kamrup. |
| Dalai, Gobindachand .. | " Jaynath Smriti Bhagabatbagisa | Bamunkuchi, Kamrup |
| Goswami, Achyutananda ... | " Raghunath Vyakarantirtha | Helcha, Tihu, Kamrup |
| " Bangsibadan ... | " Gopalchandra Smriti Tarka Vyakarantirtha ... | Kanthalkuchi, Kamrup |
| " Damodar ... | " Panchanan Vyakarantirtha ... | Bangaon, Kamrup |
| Sarma, Adyanath ... | " ditto ... | ditto |
| " Girishchandra ... | " Lalitchandra Smritiratna ... | Kakaya, Belsar, Kamrup |
| " Harakumar .. | " Puspakanta Sastri ... | Baranaddi, Kamrup |
| " Hareswar ... | " Sambhunath Sastri Smriti Vyakarantirtha .. | Bahajani, Kamrup. |
| " Kamalakanta . . | " Biswanath Smriti Bhagabatbagisa ... | Haridanga, Tihu, Kamrup |
| " Kasinath .. | " Raghunath Siromoni ... | Guakuchi, Kamrup |
| " Lakshminath .. | " Sambhunath Sastri Smriti Vyakarantirtha ... | Bahajani, Kamrup. |
| " Maneswar ... | " Hareswar Sarma Upadhyaya ... | Bamundi, Kamrup |
| " Padmakanta . . | " Kamaleswar Vidyabinode ... | Balabangaon, Kamrup |
| " Sibnath | " Sauridatta Vyakarantirtha ... | Larama Kamrup |
| " Srikantha . | " Sambhunath Sastri Smriti Vyakarantirtha | Bahajani, Kamrup |
| " Uttamchandra . | " Puspakanta Sastri ... | Baranaddi, Kamrup |
| | **KAVYA.** | |
| | ***Second Division*** | |
| Bhattacharyya, Dinanath . | Pandit Raghunath Siromoni | Guakuchi, Kamrup |
| " Guruprasad ... | " ditto .. | ditto |
| | **SMRITI.** | |
| | ***First Division*** | |
| Vyakarantirtha Narapati .. | Pandit Raghunath Seromani ... | Guakuchi, Nalbari, Kamrup |
| | **SAMA VEDA** | |
| | ***Second Division*** | |
| Bhagabati, Krishnakanta . | Pandit Gopalchandra Smriti Vyakaran Tarka tirtha ... | Kanthalkuchi, Kamrup |
| Bhattacharyya, Mahendranath ... | " ditto ... | ditto |
| Dalai, Dhireswar ... | " Jaynath Vyakarantirtha .. | Bamunkuchi, Kamrup |
| Sarma, Mahikanta ... | " Kamaleswar Vidyaratna ... | Tipu, Kamrup |
| | **SYLHET CENTRE.** | |
| | **LAGHU KAUMUDI.** | |
| | ***Second Division.*** | |
| Mazumdar Jyotishchandra . | Pandit Rajendrakumar Sankhyatirtha .. | Brahmansasan, Sylhet. |
| | **KALAP** | |
| | ***Second Division.*** | |
| Bhattacharyya, Ketakiranjan ... | Pandit Birajanath Smrititirtha ... | Mithapur, Sylhet |
| " Lalangakumar .. | " Rajendrakumar Sankhyatirtha ... | Brahmansasan, Sylhet |
| " Rasamay ... | " Birajanath Smrititirtha ... | Mithapur, Sylhet. |
| Chakravarti, Nagendrachandra ... | " Mahendranath Smritibhusan ... | Dacca Dakhin, Sylhet. |
| " Pabitranath ... | " Mahendrakumar Smritibhusan ... | ditto. |
| Goswami, Haripada ... | " Rajendrakumar Sankhyatirtha ... | Brahmansasan, Sylhet |
| Sarmacharyya, Hridoychandra ... | " Birajanath Smrititirtha ... | Mithapur, Sylhet |
| | **KAVYA** | |
| | ***Second Division.*** | |
| Bhattacharyya, Haridhan ... | Pandit Dwijendrachandra Smrititirtha .. | Sandilyasasan Sylhet |
| " Jogendrakumar ... | " Nalinimohan Shastri, M.A ... | Sylhet. |

## SYLHET CENTRE—*concld.*

| Name of candidate. | Name of teacher. | Place of *tol*. |
|---|---|---|
| | **SMRITI.** | |
| | *Second Division.* | |
| Chakravarti, Bimalacharan | ... Pandit Doyalkrishna Smritatirtha | .. Kadipur, Sylhet. |
| | **NYAYA** | |
| | *Second Division* | |
| Bhagabati, Kanakchandra | ... Pandit Akhilchandra Tarkatirtha | ... Government Sanskrit College, Sylhet |
| Bhattacharyya, Ramdan | ... " ditto | ... ditto. |
| | **VEDANTA.** | |
| | *Second Division* | |
| Goswami, Pankajbehari | ... Pandit Harsanath Smritirtha | Government Sanskrit College, Sylhet |

## SANSKRIT SCHOOL COMMITTEE, MANDALA, C. P.

### LAGHU KAUMUDI

*Second Division*

| | | |
|---|---|---|
| Arvikar, Sankar | . Pandit Pandrinath Shastrighatey | ... Nagpur, C P |
| Bishma, Ananda | ... " ditto | ... " |
| Goswami, Keshoo | " ditto | ... ditto |
| Tewari, Naramprasad | ... " Puranchandra Dwivedi | ... Woodburn Pathsala, Mandala, C. P |
| Rao, Narainkrishna | ... " Pandrinath Shastri | ... Nagpur, C P |

### KAVYA

*Second Division*

| | | |
|---|---|---|
| Tewari, Kasinath | ... Pandit Puranchandra Dwivedi | .. Woodburn Pathsala, Mandala, C. P. |

### PURAN

*Second Division*

| | | |
|---|---|---|
| Sahasrabudhya, Sankargopal | ... Pandit Pandrinath Sastrighatey | ... Nagpur, C P. |

## HITAKARINI SABHA, JUBBALPUR.

### LAGHU KAUMUDI

*First Division*

| | | |
|---|---|---|
| Sarma, Indrapatprasad | ... Pandit Gayaprasad Sarma | ... Rewah, Rewah |
| " Pyarelal | ... " Ramratan Tripathi | ... Chawarpatha, Narsinghar. |

*Second Division*

| | | |
|---|---|---|
| Batoo, Ramswarup | ... Pandit Jiwaram Sharma | ... Chandpur, Bijnour, |
| Chaube, Ramswarup | ... " Sadasheo Shastri | ... Rewah, Rewah. |
| Pande, Babulal | . " Laxmanprasad Shastri | .. Katnimurwara, Jubbalpur |
| Sarma, Angadprasad | ... " Prayagdatta Shukla | ... Sihora, Jubbalpur. |
| " Balaprasad | ... " Sadasheo Shastri | ... Rewah, Rewah. |
| " Balkrishna | " Narbadaprasad Sastri | ... Harda, Hasangabad. |
| " Bhayalal | ... " ditto | . ditto. |
| " Chandrabhanu | ... " Ramratan Tripathi | ... Chawarpatha, Narsinghar |
| " Dasarathprasad | ... " Laxmanprasad Sastri | ... Katnimurwara, Jubbalpur. |
| " Girijaprasad | ... " Ramratan Tripathi | ... Chawarpatha, Narsinghar. |
| " Janakiprasad | ... " Sadasheo Shastri | ... Rewah, Rewah. |
| " Mamraj | ... " Laxmanprasad Sastri | ... Katnimurwara, Jubbalpur. |
| " Murarilal | ... " ditto | ... ditto. |
| " Ramchandra | ... " Jiwaram Sharma | ... Chandpur, Bijnour |

## KAVYA HITAKARINI SABHA, JUBBALPUR—*concld.*

| Name of candidate | Name of teacher | Place of *tol.* |
|---|---|---|
| | **LAGHU KAUMUDI—*concld*** | |
| | ***Second Division*—concld** | |
| Sarma, Ramprasad | Pandit Narbadaprasad Sastri | Harda, Hosangabad. |
| " Rohiniprasad | " Prayagdatta Shukla | Sihora, Jubbalpur |
| " Satyapall | ..... | ..... |
| " Shivagobinda | Pandit Kanhaiyalal Sastri | Cawnpore, Cawnpore |
| " Surajbhan | " Laxmanprasad Sastri | Katnimurwara, Jubbalpur |
| " Swayambarprasad | " Sadasheo Shastri | Rewah, Rewah |
| Tripathi, Rambit | " ditto | ditto. |
| " Vishnu Datta | " Prayagdatta Sukla | Sihora, Jubbalpur |
| | **SARASWAT CHANDRIKA** | |
| | ***Second Division*** | |
| Sarma, Chintaman | Pandit Laxmanprasad Sastri | Katnimurwara, Jubbalpur |
| " Gobardhanlal | " Laxmishankar Sarma | Narsinghar, Bhupal |
| " Hanumanprasad | " Ramprasad Pathak | Rewah, Rewah |
| " Ramprasad | " Laxmishankar Sarma | Narsinghar, Bhupal |
| " Ramsajiwan | " Nandkishore Sarma | Rewah, Rewah |
| " Ramsewak | " ditto | ditto |
| " Sunda lal | " Laxmanprasad Sastri | Katnimurwara Jubbalpur |
| | **SARASWAT** | |
| | ***Second Division*** | |
| Sarma, Ganeshprasad | Pandit Bansgopal Garge | Katnimurwara Jubbalpur |
| " Matilal | " Debiprasad Shastri | Narsinghar, Bhupal. |
| " Ramprasad | " Bansgopal Garge | Katnimurwara, Jubbalpur |
| " Umasankar | " Debiprasad Shastri | Narsinghar, Bhupal. |
| | **KAVYA.** | |
| | ***Second Division*** | |
| Misra, Durgaprasad | Private | Seswara, Barabanki |
| Sarma, Brijnandanram | Pandit Sadasheo Shastri | Rewah, Rewah. |
| " Dharm Pal | " Manishi Shastri | Delhi, Delhi |
| Sastri, Manishi | " Shusil Deo | ditto |
| Verma, Harisankar | " Bhawanprasad Sarma | Hosangabad |
| | **PURAN** | |
| | ***Second Division*** | |
| Sarma, Sadasheo Deo | Pandit Jagannath Shastri | Rewah, Rewah. |

## SANSKRIT SCHOOL COMMITTEE KHAIRAGARH, C P

| | | |
|---|---|---|
| | **LAGHUKAUMUDI.** | |
| | ***Second Division.*** | |
| Sharma, Ayodhyaprasad | Pandit Kashidatta Jha Purantirtha | Khairagarh, Raipur |
| Shrivastava, Santoshlal | ditto | ditto. |
| | **SMRITI** | |
| | ***Second Division.*** | |
| Jha, Sheodatta | Pandit Kashidatta Jha Purantirtha | Khairagarh, Raipur |
| | **UPANISAD** | |
| | ***Second Division*** | |
| Suvanakar, Mahiram | Pandit Kashidatta Jha Purantirtha | Khairagarh, Raipur. |
| Thakur, Triambaknath | ditto | ditto |

## NAGPUR CENTRE.

| Name of candidate | | Name of teacher. | | Place of *tol*. |
|---|---|---|---|---|
| | | **LAGHU KAUMUDI** | | |
| | | ***Second Division.*** | | |
| Joshi, Jangulal | Pandit | Pandit Shivakumar Shastri | ... | Sudarsan Pathsala, Nagpur |
| Kamalakar, Vyankatesh | | " Vyankat Ramanacharyya | ... | Sangli, Sangli |
| Kashikar, Ramchandra | | " Wasudeo Shastri Ghate Kavyatirtha | | Saraswat Bhaban, Nagpur. |
| Munje, Chintaman | | " Bala Shastri Ghate | ... | ditto |
| Vajpeyi, Mahesh Datta | ... | " Shivakumar Shastri | ... | Sudarsan Pathsala, Nagpur. |
| | | **KAVYA** | | |
| | | ***First Division*** | | |
| Joshi, Narayan | ... | Pandit Pandharinath Shastri Ghate | ... | Nagpur, Nagpur. |
| Kale, Gajanan | ... | Ditto | . | ditto |
| | | ***Second Division*** | | |
| Bedekar, Sadashiva | ... | Pandit M B Pastokar, M A, LL B | ... | Amraoti, Amraoti. |
| Ghadge, Chintaman | . | " Trimbakyageshwar Joshi | ... | Nagpur, Nagpur |
| Kale, Ramdas | ... | " Shankargopal Sahasrabudha | ... | ditto |
| Mulmule, Dhandiraj | ... | " Mahadeo Muralidhar Shastri | ... | Murtizapur, Akola. |
| Nandurkar, Narayan | ... | " Shriniwas Sastri Hardas | ... | Nagpur, Nagpur |
| Sadhu, Purusattam | ... | " Shankargopal Sahasrabudha | ... | ditto |
| Sangit, Atmaram | . | " Bithal Shastri Dhoke | ... | Umred, Nagpur |
| Tembhekar, Narayan | | " Shriniwas Shastri Hardas | ... | Nagpur, Nagpur. |
| | | **VEDANTA (*Ka*)** | | |
| | | ***Second Division*** | | |
| Sarma, Narayan | | Pandit Narayan Shastri Ghuse | ... | Bori, [illegible]pur |
| | | **PURAN** | | |
| | | ***Second Division*** | | |
| Ayachita, Shriniwas | .. | Pandit Pandharinath Shastri Ghate | ... | Nagpur, Nagpur |
| Durge, Govinda | .. | " Gadi Shastri Pendke | .. | Umred, Nagpur. |
| Sangamkar, Vinayak | .. | " Pandharinath Shastri Ghate | ... | Nagpur, Nagpur |

## STATE EDUCATION COMMITTEE, DATIYA.

| | | | | |
|---|---|---|---|---|
| | | **LAGHU KAUMUDI** | | |
| | | ***Second Division*** | | |
| Das, Mangal | ... | Pandit Kamalapati Nicharele | ... | Datia, Datiya State. |
| Dwivedi, Ambikadatta | .. | " Ramanath Chaturvedi | .. | Vanipara, Cawnpore |
| Purohit, Sivacharan | ... | " Kapileswar Jha Vyakarantirtha | .. | Datiya, Datiya State |
| Sarma, Gopinath | ... | " Dukhaharan Jha | .. | Sanskrit Pathsala, Jalaun |
| Tripathi, Vanmali Sarma | ... | " Ramballabh Sastri | ... | Vittalnath Pathsala, Haroti |
| | | **SARASWAT CHANDRIKA** | | |
| | | ***Second Division*** | | |
| Dehulia, Ramdas | .. | Pandit Vasantaram Tripathi | ... | Charkhari, Hamirpur |
| Misra, Gayaprasad | ... | " Ramnath Chaturvedi | ... | Vanipara, Cawnpore |
| Pathak, Jagannathprasad | .. | " Vasantaram Tripathi | ... | Charkhari, Hamirpur |
| | | **KAVYA.** | | |
| | | ***First Division.*** | | |
| Sarma, Patkurchikanthamani | ... | Pandit Patkuchi Balkrishna Sastri | ... | Rajkiya Pathsala, Datiya. |
| | | ***Second Division.*** | | |
| Dikshit, Bansgopal | ... | Pandit Prabhudayal Vishagratna | ... | Auraiya, Etawah. |
| Misra, Ramashraya | ... | " Chandrasekhar Sastri | ... | Cawnpore, Cawnpore. |
| Nágarch, Munai | ... | " Kapileswar Jha Vyakarântirtha | .. | Rajkiya Sanskrit Pathsala, Datiya. |
| Sarma, Bhramarlal | ... | " Ramballabh Sastri | ... | Kotah, Haroti State. |
| " Gobardhan | ... | " ditto | ... | ditto. |
| " Kanhaiyalal | ... | Private. | | |
| " Pitambardatta | ... | Pandit Lakshmikumar Tatacharya | ... | Darbar High School, Bondi, Rajputana. |
| Sukla, Hariballabh Sarma | ... | " Ramballabh Sastri | ... | Kotah, Haroti State. |

## SANATAN DHARMA SABHA, INDORE.

| Name of candidate | Name of teacher. | Place of tol |
|---|---|---|
| | **LAGHU KAUMUDI** | |
| | ***First Division*** | |
| Babulal | Pandit Chandraballabh Ji | Badwani, Nimad |
| Bai, Yamuna | „ Sadasiv Shastri | Indore |
| | ***Second Division*** | |
| Amritalal | Pandit Gajanan Ji Shastri | Badawani, Nimad, C. I. |
| Babulal | „ Chandraballabh Ji | ditto. |
| Balakrisna | „ Ramkrishna Shastri | Indore |
| Chaturmal | „ Gajanan Shastri | ditto |
| Damodar | „ Shibasankar Shastri | Mandasor, Gwalior |
| Dattatraya | „ C. P. Shastri | Indore |
| Debdatta | „ Shibasankar Shastri | Mandasor, Gwalior |
| Devi, Kamala | „ Dharandhar Shastri | Ajmere |
| Ganapati | „ Gajanan Ji Shastri | Badawani, Nimad, C. I. |
| Gaurisankar | „ Sitalprasad Sastri | Khandwa, Nimad |
| Ghanashyam | „ Gangadhar Shastri | Manasa, Rampura, C. I. |
| Ghisalal | „ Dwarakanath Shastri | Mhowkamp, Indore |
| Jagannath | „ Ramdatta Ji | Pilmeeta, Pilmeeta |
| Kanaiyalal | „ Jaysankar Shastri | Sailana. |
| Laluram | „ Ramdatta Ji | Pilmeeta, Pilmeeta |
| Laxmilal | „ Ramchandra Ji | Bhilwada, Udaipur |
| Murlydhar | „ Chandraballabh Ji | Badwani, Nimad |
| Nandakishore | „ Pannalal Shastri | Ujjain |
| Jwala, Prasad | „ Sitalprasad Shastri | Khandwa, Nimad |
| Ramchandra | „ Chandraballabhji | Badwani, Nimad |
| Ranganath | „ Ramdattaji | Pilmeeta, Pilmeeta |
| Sadashib | „ Chandraballabhji | Badwani, Nimad |
| Sarma, Balakrisna | „ Sitalprasad Shastri | Khandwa, Nimad |
| „ Bhauram | „ ditto | ditto |
| „ Chunilal | „ Mahadev Shastri | Indore |
| „ Devidatta | „ Pannalal Shastri | Ujjain |
| „ Kasinath | „ Chandraballabhji | Badwani, Nimad |
| „ Kasinath | „ Sitalprasad Shastri | Khandwa, Nimad |
| „ Ladulal | „ Pannalal Shastri | Ujjain |
| „ Mathuralal | „ Dharandhar Shastri | Ajmere |
| „ Purushattam | „ Gajananji Shastri | Badwani, Nimad, C. I. |
| „ Ramchandra | „ Ramdattaji | Pilmeeta, Pilmeeta |
| „ Sitaram | „ Sitalprasad Shastri | Khandwa, Nimad |
| „ Sridhar | „ Chandraballabji | Badwani, Nimad |
| „ Visnu | „ Sital Prasad Sastri | Khandwa Nimad |
| Bhabani Sankar | „ Jaysankar Shastri | Sailana |
| Hari Sankar | „ Pannalal Shastri | Ujjain. |
| Maya Sankar | „ Gangadhar Shastri | Manasa, Rampura, C. I. |
| Srikrisna | „ Shitalprasad Shastri | Khandwa, Nimad |
| Surendranath | „ Srikrisna Shastri | Indore |
| Viswanath | „ Chandraballabhji | Badawani, Nimad. |

## JAIN VYAKARANA (DIGAMBARA)

| | | |
|---|---|---|
| | ***First Division.*** | |
| Hiralal | Pandit Shambhunathji | Indore. |
| Kamataprasad | „ Mahadewprasadji | Byawar, Ajmere |
| Manikyalal | „ Shambhunathji | Indore |
| | ***Second Division*** | |
| Jain, Baburam | Pandit Mahadewprasadji | Byawar, Ajmere. |
| Onkarlal | „ ditto | ditto |
| Monoharlal | „ ditto | ditto |
| Pannalal | „ Shambhunathji | Indore |
| Shankarlal | „ Mahadewprasadji | Byawar, Ajmere. |

## INDORE CENTRE.—*contd.*

| Name of candidate | | Name of teacher. | | Place of *tol* |
|---|---|---|---|---|
| | | **KAVYA** | | |
| | | *First Division* | | |
| Premballabh | | Pandit Birupaksha Badayar | ... | Indore |
| Sundarlal | | ,, Ramdayal Shastri | ... | ditto |
| | | *Second Division.* | | |
| Bai, Kushanta | ... | Pandit Gajanan Shastri | .. | Indore |
| Basudev | ... | ,, Mahadew Shastri | ... | ditto. |
| Bhargav | ... | ,, C P Shastri | ... | ditto |
| Bhalchandra | ... | ,, Narayan Shastri | ... | ditto |
| Bhuralal | ... | ,, Pannalal Shastri | ... | Ujjain. |
| Dinkar | .. | ,, Narayan Shastri | ... | Indore |
| Ganapat | . | ,, Chandraballabh Shastri | ... | Badawari, Nimad. |
| Janardan | .. | ,, C. P. Shastri | ... | Indore. |
| Kantaran | . | ,, ditto | . | ditto. |
| Kasinath | .. | ,, Mahadeb Shastri | ... | ditto |
| Lokaman | ... | ,, C P Shastri | .. | ditto |
| Narahari | ... | ,, Gangadhar Shastri | ... | Manasa, Rampura |
| Narayan | ... | ,, C P Shastri | . | Indore |
| Narmadaprasad | .. | ,, ditto | . | ditto |
| Pannalal | | ,, ditto | ... | ditto. |
| Pundalik | .. | ,, ditto | . | ditto |
| Raghunandan | ... | ,, Pannalal Shastri | ... | Ujjain |
| Ramchandra | . | ,, Ramkrisna Shastri | ... | Indore |
| Ramchandra | . | ,, C P. Shastri | | ditto |
| Sadashib | . | ,, ditto | ... | ditto |
| Sankar | . | ,, Damodar Shastri | . | ditto |
| Sitaram | | ,, Sridhar Shastri | .. | ditto |
| Srikrisna | | ,, C. P. Shastri | ... | ditto. |
| Trimbak | . | ,, ditto | ... | ditto |
| Trimbak | . | ,, W G. Urdhareshi | ... | ditto |
| Venkatesh | . | ,, Ramchandra | . | ditto |
| Visnu | | ,, C P. Shastri | .. | ditto |
| Yashawant | . | ,, Birupaksha Badiyar | ... | ditto |
| Yashawant | . | ,, C P. Shastri | ... | ditto. |
| | | **SMRITI** | | |
| | | *Second Division* | | |
| Narayan | | Pandit Purushottam Shastri | | Indore |
| | | **JAIN NYAYA (DIGAMBAR).** | | |
| | | *Second Division* | | |
| Fulchand | ... | Pandit Jivandhar | .. | Indore |
| Jain, Kasiram | . | ,, Nandkisore Shastri | ... | Byawar, Ajmere |
| ,, Kamalkishore | . | ,, ditto | ... | ditto. |
| ,, Nandkishore | . | ,, ditto | ... | ditto |
| ,, Ramsarup | . | ,, ditto | ... | ditto |
| ,, Srimbash | . | ,, ditto | ... | ditto. |
| | | **VEDANTA** | | |
| | | *Second Division* | | |
| Sarma, Jajneswar | ... | Pandit Srikrishna Shastri | ... | Indore |
| | | **PURAN** | | |
| | | *Second Division* | | |
| Hari | ... | Pandit Narayan Shastri | ... | Indore |
| | | **JYOTISH** | | |
| | | *Second Division.* | | |
| Lakshmidatta | ... | Pandit Ramsuchit Shastri | ... | Indore. |
| Sarma, Dwarkanath | ... | ,, ditto | ... | ditto |
| ,, Hariprasad | ... | ,, ditto | ... | ditto. |

## INDORE CENTRE—*concld.*

| Name of candidate | Name of teacher. | Place of *tol.* |
|---|---|---|
| | **RIGVEDA.** | |
| | *Second Division* | |
| Ramchandra ... | Pandit Mahadew Shastri | Indore |
| | **SUKLA YAYURVEDA** | |
| | *Second Division* | |
| Damodar . | Pandit Narayan | ... Indore |
| Matiram ... | „ Birupaksha Badiyar | .. ditto |
| Sukla, Ramchandra . | „ Chandraballabh Shastri | .. Badawani |
| | **MIMANSA** | |
| | *Second Division* | |
| Sarma, Purushottam .. | Pandit Sripad Shastri | ... Indore |
| „ Raghunath ... | „ Chandraballabh Shastri | Badawani |

## GOKULDAS TEJPAL SANSKRIT COLLEGE, BOMBAY

| | | |
|---|---|---|
| | **LAGHU KAUMUDI** | |
| | *First Division* | |
| Barma, Sadasiva | Pandit Ramapati Misra . | Gokuldas Tejpal Sanskrit College, Bombay |
| | *Second Division* | |
| Barma, Adityanarayan . | Pandit Ramapati Misra . | Gokuldas Tejpal Sanskrit College, Bombay |
| „ Chunilal | „ Shastri Girjashankar Nathji | Ahmedabad, Ahmedabad |
| „ Dayasankar ... | „ Hargobinda Shastri | Old Hanuman Lane, Bombay |
| „ Jagannath | „ Shastri Girjashankar Nathji . | Ahmedabad, Ahmedabad |
| „ Ramsuchidas .. | „ Ramapati Misra .. | Gokuldas Tejpal Sanskrit College, Bombay |
| Vishnab, Girivardas .. | „ Vyakarantirtha Gaurishankar Durlabhram Shastri ... | Raipurchakla, Ahmedabad |
| „ Narmadadas ... | „ Vyakaranacharyya Shastri Rewashankar Girijashankar Sarma ... | Ahmedabad, Ahmedabad |
| | **KAVYA** | |
| | *First Division* | |
| Sarma, Shalgram ... | Pandit Ramapati Misra .. | Gokuldas Tejpal Sanskrit College, Bombay |
| | *Second Division* | |
| Devi, Srimati Bhagbati .. | Pandit Shastri Jibran Jaishankar Vishram | Girgaon, Bombay |
| „ Srimati Jayganga . | „ ditto ... | ditto |
| Sarma, Chimanlal .. | Pandit Ramapati Misra .. | Madhabbag, Bombay |
| „ Ganesh | „ Pursottam Sastri Dasputra ... | Jawhar State, Thana |
| „ Ganesh ... | „ Pursottam Laxman Garge ... | Nasik, Nasik |
| „ Hari ... | „ Kavyatirtha Shastri Bhicoji Vishnu Joshi ... | Gokuldas Tejpal S College, Bombay. |
| „ Keshabananda ... | „ Vyakaranacharyya Sastri Reva Shankar ... | Ahmedabad, Ahmedabad |
| „ Krishna Ji ... | „ Hari Shastri Garge ... | Nasik, Nasik |
| „ Mahavir Prasad ... | „ Ramapati Misra ... | Sandurst Road, Bombay. |
| „ Narbada Shankar .. | „ Sastri Kripashankar Bhagvanji ... | Suryyapur, Surat |
| „ Ramanlal ... | „ Vyakarantirtha Gaurisankar Durlabhram Sastri ... | Raipurchakla, Ahmedabad |
| „ Tikaram ... | „ Ramapati Misra ... | Gokuldas Tejpal S College, Bombay. |
| A. T. Sivaram Sastri ... | „ Kavya Subbharao Sastri ... | Suryapur Anantapur |

## GOKULDAS TEJPAL SANSKRIT COLLEGE, BOMBAY—*concld.*

| Name of candidate. | | Name of teacher | | Place of *tol* |
|---|---|---|---|---|
| | | **NYAYA (*Ka*)** | | |
| | | *Second Division* | | |
| Sarma, Raghunath | ... | Pandit Narayan Sastri Marathe | ... | Vai, Satara. |
| | | **PURAN** | | |
| | | *Second Division* | | |
| Sarma, Ananda Shankar | ... | Pandit Vyakarantirtha Sastri Gaurishankar Durlabhram Pandeya | ... | Raipurchakla, Ahmedabad |
| " Lakshmi Shankar | ... | " ditto | ... | ditto |
| | | **JYOTISH** | | |
| | | *Second Division* | | |
| Sarma, Gobinda | ... | Pandit Dattatraya Sastri Joshi | .. | Miraj, Belgaum |

## BANAMALI CENTRE, BRINDABAN.

| | | | | |
|---|---|---|---|---|
| | | **HARINAMAMMRITA VYAKARAN.** | | |
| | | *Second Division.* | | |
| Das, Adwaita | ... | Pandit Krishnagobinda Das | ... | Brindaban, Muttra |
| " Krishna | ... | " ditto | ... | ditto |
| Sarma, Gourdas | ... | " ditto | ... | ditto |
| | | **BAISHNAB DARSAN** | | |
| | | *Second Division* | | |
| Das, Narottam | ... | Pandit Krishna Chandra Bhagabatbhusan | ... | Brindaban, Muttra |
| Goswami, Krishna Chaitannya | ... | " Madhusudan Goswami | .. | ditto |
| " Nandakishore | .. | " Krishna Chandra Bhagabatbhusan | ... | ditto |
| Mazumdar, Haranath | ... | " ditto | ... | ditto. |
| Sarma, Bhatta Giridhar | ... | " ditto | ... | ditto. |

## MIDNAPUR CENTRE.

| | | | | |
|---|---|---|---|---|
| | | **KAVYA.** | | |
| | | (Supplementary List) | | |
| | | *Second Division* | | |
| Vaskaracharyya Totapalli Subrahmanya Sastri | ... | Pandit Umapati Trivedi | ... | 2, Mitra Lane, Calcutta. |
| M. Venkata Subrahmanya Sastri | ... | " ditto | ... | ditto |
| Khadri Venkata Sesha Sastri | ... | " ditto | ... | ditto. |
| Sabada Venkataram Sastri | ... | " ditto | ... | ditto. |

ASHUTOSH SHASTRI,
*Secretary, Calcutta Sanskrit Association*

CALCUTTA SANSKRIT ASSOCIATION, *the 14th July 1923.*

## Board of Intermediate and Secondary Education, Dacca.

### Text-books for 1925.

### INTERMEDIATE EXAMINATION.

### I. For all students.

#### 1. English.

| | | |
|---|---|---|
| Stevenson, R. L. | ... | The Treasure Island. |
| Conrad | ... | Typhoon. |

#### 2. Vernacular.

(i) BENGALI.

| | | |
|---|---|---|
| Rabindranath Tagore | ... | Galpaguchcha, Part I. |
| Bankimchandra Chatterjee | ... | Kapala-kundala. |
| Ramendrasundar Trivedi | ... | Charita-katha |

(ii) URDU.

| | | |
|---|---|---|
| Shibli | ... | Al Mamun. |
| Hali | ... | Musaddas-i-Hali. |
| Habibar Rahman Sherwani | ... | Ulema-i-Salaf |
| Sir Iqbal | ... | Shikwa |

### II. One of the following groups to be selected by students.

#### GROUP A (Arts Course).

3 to 6. Any four of the following :—

#### (a) English Literature.

| | | |
|---|---|---|
| Shakespeare | ... | Julius Caesar |
| Tennyson | ... | The Passing of Arthur |
| Hardy, Thomas | ... | A Pair of Blue Eyes |
| Keats | ... | Ode to Autumn and Ode to the Nightingale. |
| Rhys, Ernest | ... | Modern English Essays, Vol IV (J. M. Dent & Sons) Selections to be notified later. |

#### (b) History.

The following books are recommended for use by students in studying the subject in accordance with the syllabus prescribed —

| | | |
|---|---|---|
| Breasted and Robinson (Ginn & Co.) | ... | Outlines of European History, Part I, sections 1-22, 58 and 59. |
| Grant, A. J. (Longmans Green & Co.) | ... | Outlines of European History. |
| Higham, C. S. S. (Longmans Green & Co.) | ... | History of the British Empire. |

The books are to be supplemented by a general course of lectures on Indian, Chinese and Islamic history and civilisation.

The following book is recommended for more advanced reading and for the guidance of lecturers :—

| | | |
|---|---|---|
| Wells, H. G. | ... | The Outline of History. |

(c) Geography.

The following books are recommended for use by students in studying the subject in accordance with the syllabus prescribed :—

| | | |
|---|---|---|
| Hughes and Gregory | ... | Class-book of Physical and Astronomical Geography |
| Blandford | ... | Rudiments of Physical Geopraphy for Indian Schools. |
| Smith and Lyde | ... | A Brief Introduction to Commercial Geography (New Edition). |
| Simmons and Richardson | ... | Introduction to Practical Geography. |
| Elderton, W. A. | ... | Maps and Map-drawing. |
| Herbertson | ... | Senior Geography (Post-war Edition). |
| Lyde | ... | The World (Post-war Edition). |
| Fry | ... | Text-book of Geography (Post-war Edition). |

(d) Logic.

The following books are recommended for use by students in studying the subject in accordance with the syllabus prescribed :—

| | | |
|---|---|---|
| Ray, P. K. | ... | A Text-book of Deductive Logic. |
| Welton, J. | ... | Manual of Logic, Vol. II. (Inductive). |

(e) Mathematics.

No text-books are prescribed or recommended.

(f) Economics.

The following books are recommended for use by students in studying the subject in accordance with the syllabus prescribed .—

| | | |
|---|---|---|
| Moreland | ... | Introduction to Economics. |
| Banerjee, P. N. | ... | Indian Economics |
| Gide | ... | Principles of Political Economics (Only the Chapters bearing on 'Money') |
| Strickland | ... | Co-operation in India. |

(g) Classical Language.

(i) SANSKRIT.

| | | |
|---|---|---|
| Kalidasa | ... | Raghuvansa, Cantos I, II and III |
| Bhartrihari | ... | Nitishataka. |
| Dandin | ... | Gomini Vrittanta from Dasakumar Charita. |

(ii) ARABIC.

Calcutta University Selections compiled and edited by E D. Ross, C.I.E., PH. D. (the whole).

(iii) PERSIAN.

Calcutta University Selections, compiled and edited by E. D. Ross, C.I.E., Ph. D omitting all Arabic portions and also pages 62—76.

(iv) BENGALI (for female candidates).

| | | |
|---|---|---|
| Kaliprasanna Ghosh | ... | Ma na Mahashakti. |
| Rabindranath Tagore | ... | Loka-sahitya. |
| Syed Imdad Ali | ... | Tapasi Rabeya. |
| Saratchandra Chatterjee | ... | Bindur Chhele. |
| Beharilal Chakrabarti | ... | Vanga Sundari. |
| Kritibas | ... | Ramayan (Ayodhyakanda). |
| Rabindranath Tagore | ... | Chayanika (Selections to be notified later). |
| Michael Madhusudan | ... | Chaturdashpadi Kabita (Selections to be notified later). |

GROUP B (Science Course).

3. Mathematics.

Same as for Group A.

4 to 6 Any three of the following —

(a) PHYSICS.

The following books are recommended for use by students in studying the subject in accordance with the syllabus prescribed —

| | | |
|---|---|---|
| Aldous | ... | Elementary Course of Physics |
| Rajanikanta De | ... | Introduction to the Study of Sound. |
| Glazebrooke | ... | Heat. |
| Glazebrooke | ... | Light |
| Hadely | ... | Elementary Electricity and Magnetism |
| Watson | ... | Elementary Practical Physics. |

(b) CHEMISTRY

The following books are recommended for use by students in studying the subject in accordance with the syllabus prescribed —

| | | |
|---|---|---|
| Perkin and Lean | ... | Introduction to the Study of Chemistry |
| P C. Ray | ... | Elementary Inorganic Chemistry. |
| P C Ray | ... | Practical Inorganic Chemistry |
| Haridas Shaha and Kumudnath Chaudhuri | ... | A Course of Practical Chemistry for Intermediate Students. |
| D. N Mukerjee | ... | Elements of Inorganic Chemistry |
| Donnington | ... | A Class-book of Chemistry (Parts I-IV) (Macmillan & Co.). |
| H C Mookerjee | .. | Inorganic Chemistry. |
| William Jago | ... | Inorganic Chemistry (Stage II) |

(c) BOTANY.

The following books are recommended for use by students in studying the subject in accordance with the syllabus prescribed —

| | | |
|---|---|---|
| Bailey, L. H. | ... | Botany, an Elementary Text for Schools (latest edition). |
| Fyson, P. F. | ... | Botany for India. |
| Woodhead | ... | The Study of Plants |
| Bose, G C. | ... | A Manual of Indian Botany |

(d) GEOGRAPHY

Same as Group A

GROUP C (Islamic Course).

Text-books are printed separately.

GROUP D (Course in Dyeing).

3. Mathematics.

No text-books are prescribed or recommended.

4. Physics.

Same as Group B.

### 5. Chemistry.

(a) INORGANIC CHEMISTRY.

Same as for Group B

(b) ORGANIC CHEMISTRY.

| | | |
|---|---|---|
| Cohen | .. | Class Book of Organic Chemistry. |
| Ghosh, J. C. | ... | Organic Chemistry (to supplement the above). |

### 6. Principles of Dyeing.

The following books are recommended for reference :—

| | | |
|---|---|---|
| Knévht, E., Rawson, C., Lowenthal, R | ... | Manual of Dyeing. |
| Hubner, J. | ... | Dyeing of Vegetable Fibrous Materials. |
| Hummel, J | ... | Dyeing of Textile Fibres |
| Beech, F. | ... | Cotton Dyeing. |
| Beech, F | ... | Wool Dyeing |
| Hust, G. | ... | Silk Dyeing |
| Georgevics, G. Von | .. | The Chemical Technology of the Textile Fibres |

## GROUP E (Commerce Course).

### 3. Book-keeping and Simple Accountancy.

The following book is recommended for use by the students in studying the subject, in accordance with the syllabus prescribed —

| | | |
|---|---|---|
| Grierson | ... | Practical Book-keeping for Commercial Classes. |

### 4. Commercial Correspondence and Methods of Business.

The following book is recommended for use by students in studying the subject in accordance with the syllabus prescribed

| | | |
|---|---|---|
| Patton ... ... | ... | Commercial Correspondence and Office Routine. (For reference). |
| Pitman ... ... | ... | Commercial Correspondence and Commercial English. |

5, 6. Any two of the following —

(a) ECONOMICS.

Same as for Group A.

(b) HISTORY.

The following books are recommended for use by students in studying the subject in accordance with the syllabus prescribed :—

| | | |
|---|---|---|
| Grant, A. J. ... | ... | Outlines of European History. |
| Highman, C. S. S. ... | ... | History of British Empire. |
| Fraser ... ... | ... | British India (Story of the Nation Series). |

Imperial Gazetteer of India—Vol. III, Chap. V, pages—267—305.

As the information given in the Imperial Gazetteer has now become, in some respects, out of date, it should be revised by the teacher in the light of the following books :—

| | | |
|---|---|---|
| Hamilton, C. J. ... | ... | Trade Relations Between India and England. |
| Ainscough, T. M. ... | ... | Review of the Conditions and Prospects of British Trade in India. |
| Cotton ... ... | ... | Hand-book of Commercial Information for India. |

(c) GEOGRAPHY.

The following books are recommended for use by students in studying the subject in accordance with the syllabus prescribed :—

| | | |
|---|---|---|
| Thornton | ... | Primary Physical Geography (Longmans, Green & Co.). |
| Blandford | ... | Rudiments of Physical Geography for Indian Schools. |
| Unstead and Taylor | ... | Commercial Geography: General and Regional. |
| Lyde | ... | The World (Post-war Edition) |
| Howarth | ... | Commercial Geography. (Oxford Geographies) (For reference) |
| Chisholm | ... | Hand-book of Commercial Geography |
| Imperial Gazetteer of India, Vol. III. Bertholomew and Lyde | ... | Atlas of Economic Geography |

(d) MATHEMATICS

No text-books are prescribed or recommended

K. I. HUQUE,

*Secretary, Board of Intermediate and Secondary Education, Dacca.*

DACCA, *the 30th June 1923*

---

**Board of Intermediate and Secondary Education, Dacca.**

**ISLAMIC INTERMEDIATE EXAMINATION, 1925.**

**1. English.**

| | | |
|---|---|---|
| Stevenson, R. L. | ... | The Treasure Island |
| Conrad | ... | Typhoon. |

**2. Vernacular.**

(i) BENGALI

| | | |
|---|---|---|
| Rabindranath Tagore | ... | Galpaguchcha, Part I. |
| Bankimchandra Chatterjee | ... | Kapala-Kundala. |
| Ramendrasundar Trivedi | ... | Charita-katha. |

(ii) URDU.

| | | |
|---|---|---|
| Shibli | ... | Al Mamun. |
| Hali | ... | Musaddas-i-Hali. |
| Habibar Rahman Sherwani | ... | Ulema-i-Salaf. |
| Sir Iqbal | ... | Shikwa. |

### 3. Arabic.

Poetry.—Qasidat-ul-Bardah, Qasidat-ul-Farazdaq on Imam Zain-ul-Abedin, Diwan-u-Abil-'Atáhiah.

Prose.—Khutabun-Nabiye was Sahábah, up to the end of the Khutbah of Hazrat Mu'áwiah, Maqámat-uz-Zamakhshary, (20 Máqámáhs), Maqámát-ul-Badi', up to the end of Al-Máqámat-ul-Isfahániah; Salásil-ul-Qiráah (A[illegible]amul-Ikhtira'át.)

Rhetoric.—'Ilm-ul-Adab, Part I) fil-Inshá wal 'Arooz (Up to the end of Chapter II, fil-Badiy'il-Lafziy)

Grammar, Composition and Essay.—General Exercises

### 4. Fiqh and Usul.

Multaqual Abhur.—Kitabun-Nekáh, up to the end of Kitabis-Sarf omitting BabuNikahir-Raqiq, wal-kafir, Kitabul 'Ataq, Kitabul-Hudood, Kitabus-Sariqah, Kitabus-Sair

Khulasat-ul-Usl.—Ta'rifu 'Ilmil-Usul, Mouzu', Ghayah, Ta'rifu-l-Hukm, Khitabut-Takhf, Khitabul-Waz'e Al-Adillah

(i) *Ar-Rukn-ul-Awal*.—Ta'rifu-l-Kitab, (Al-Khass), Ta'rifuhu, Hukmuhu, Al-Amr, Hukmuhu, Al-Adá, Al-Qazá, Al-Husn, Al-Qubh, Al-Hasan le 'Ainihi wal-Mulhaq bihi, Al-Hasan le Ghairihi wal-Mulhaq bihi, Ta'rifun Nahye wa Hukmuhu, Al-Manhiyu An'hu le 'Ainihi ao le Ghairihi, Hissiyun ao Shary'iun, Ahkamuhu, Al-Mutlaq, Al-Muqayyad, (Al-A'mmy Ta'rifuhu, Hukmuhu, Qasrul-A'mm, Takhsisul-A'mm, Hukmuhu, Alfazul-U'moom, Al-Mashtarak, Al-Jam'ul-Munkar, Az-Zahir, An-Nass, Al-Mufassar, Al-Muhkam, Al-Khafiy, Al-Mushkal, Al-Mujmal, Al-Mutashábeh, Al-Haqiqat wal-Majáz, As Sarih, Al-Kenáyah, Ad-Dallu be 'Ibaratihi, be Isharathi, wa be Nassihi, (Babul-Bayán,) Bayánut-Taqrir, Bayanut-Tafsir, Bayánut-Taghyir, Bayanuz-Zururah, Bayanut-Tabdil wa Aqsamuhu

(ii) *Ar-Ruknus-Sáni*.—Ta'rifus-Sunnah, Mutawatir, Mashhoor, Khabar-i Ahad, Sharaitur Ráwi, Al-Kalám a'lar Ráwi Inqitáu'l-Hadis A'nin Nabiy, At-Ta'an fil Hadis, Mahall-ul-Khabar wa A'nwán'hu, Fi'luhu Alaihis-Salam, Taqriruhu, Al-Wahyu, Sharáin' man Qablaná, Taqlidus-Sahábiy.

(iii) *Ar-Ruknus-Sális*.—Al-Ijmáa', Ruknuhu Ahliatu man Yuna'qidu bihi, Shurutuhu, Marátibuhu, Sanaduhu.

(iv) *Ar-Ruknur-Rábe'*.—Al-Qayás, Ta'rifuhu, Bayanu Hujjiatihi, Shurutuhu, Arkánuhu, Ma'rifatul-I'lalish Shary'iah, An-Nass, Al-Ijmá'u, Al-Munásabah-Al-I'llatul-Mujawizah wal-Mujibah, Al-Mua'razah wat-Tarjih, Mabhasul-Ijtihád.

### 5. Hadis (*including Usul-i Hadis*)

Mishkát-ul-Masábih.—Al-Faslul-Awal Was-Sáni min Kulli Báb, omitting the following:—

Salát-ul Khusoof, Al'-Atirah, Al-Haiz, Al-Mustaházah, Al-I'tikáf, Ikhtiláf-ul-Qiráah, Dukhul-u-Makkah, At-Tawaf, Al-Wokuf bi-Arafah, Ad-Dafu' min 'Arafah wal-Muzdalifah, Ramyul Jimár, Al-Hadyu, Al-Halq, Adamu Wojubit-Tartib bainal-Halq wan-Nahr, Al-Muhrim, Khutbatu Youmin-Nahr, Al-Muhrim Yajtanibus-Said, Ihyául-Mowát; Ash-Sharb, Al-'Atáyá, An-Nazar ilal-Mukhtubah, Al-Mubasharah, Khayar-ul-Amah ba'dal-Atq, Al-Imán Shartun fil-Kaffárah, Al-La'an, Al'Istibrá wa Haqqul-Mamluk, Kitábul-A'tq ilá Ibtidá-i-Ketabil-A'dáb, Bábul-Fitan ilá Ibtidá-i-Bab-i-Fazáile Sayyidil-Mursaleen, Babul-Karámat ilá A'khiri Kitab.

Usul-i-Hadis.—General lectures.

### 6. Logic.

TASAWWURAT.

Taqsimul-I'lm.—(Tasawwur, Tasdiq, Badihiy, Nazariy), Al-Mantiq, Al-Hájatu ilaihi, Mouzu', Ghâyat; Ad-Dalâlât, Al-Lafzul-Mufrad wal Murakkab (ilá Akhirıl-Aqsâm); Taqsim-ul-Mafhum: Al-Kulliy wal Juzyiy, Al-Kulliyul-Mumtaniu'l-Afrâd wal Mumkinu'l-Afrâd, (ilá Akhirıl-Aqsâm); An-Nisabul Arba'ah bainal Kulliyat.

Al-Kulliyatul-Khams.—Al-Jins, An-Nao', Al-Fasl, Al-Khassah, Al-A'razul 'Amm, Taqsimul Arazil-Lazim wal Mufariq; Al-Kullıul Mantiqiy wat-Taby'iy wal-'Aqliy.

Al-Mu'arrif —Sharâitul-Mu'arrif, Inqisâmuhu ilá Aqsâmihi.

TASDIQUAT.

Al-Qazâyâ.—Al-Qaziyatul-Hamliah, Taqsimuhâ · (i) Mujebah, Sâlebah, (ii) Shakhsiyah, Taby'iah, Mahsurah, Muhmalah, (iii) Kharijiah, Haqiqiah, Zahiriah, I'ayanus-Salb wal-U'dool.

Al-Muwajjahât—Al-Basitah wal-Murakkabah.

Ash-Shartiyât—Al-Qaziatu sh-Shartiyah, Taqsimuhâ · (i) Mujebah, Salibah, (ii) Muttasilah, Luzumiah, Ittifâqiah, (iii) Haqiqiah, Mania'tul-Jame', Mania'tul Khuluwi minal-Munfasilatil-A'nadiah wal-Ittifâqiah, Bayânush-Shakhsiah wal-Mahsurah wal-Muhmalah minash-Shartiyah

At-Tanâquz.—Sharait-ut-Tanâquz wa Naqizul-Qazâyâ.

Al-A'ks —Al-A'ksul-Mustawiy, A'ksul-Muwajjaha't, A'ksun-Naqiz a'lâ rayil-Qudamâ

Al-Qayâs.=Al-Istisnayiy, Al-Iqtiraniy, Taqsimul-Iqtiraniy (Hamliy, Shartiy), Al-Asghar, As-Sughrâ, Al-Akbar, Al-Kubrâ, Al-Haddul-Awsat, Al-Ashkâlul-Arba'ah, Sharaitu Intajish-Shaklil-Awal was-Saniwas-Sâlis, Intajul-Istisnayiil-Ittisaliy wal-Infisaliy; Taqsimul-Qayâs (Burhaniy Jadaliy, Khitabiy, She'riy, Safastiy).

General lecturers from such books as Ad-Durus ul-Mantiqiah, (Cairo), Lubâbul-Ishârat (Imâm Razi), etc

### 7. Koran and Kalam.

Al-Qur-ân-ul-Karim.—Translation and explanation including Tafsir-u-Ahammil-Maqâmât. From the beginning up to the end of Surât-ul-A'araf.

Ma'âlim-u-Usul-id-Din (Imam Razi)—I—VII.

### 8. Islamic History.

Islamic History.—With special reference to the lives of the Prophet and Khulafâ-i-Rashideen, with a knowledge of the geography of the subject

The following books are recommended :—

1. Tabaquat-ibn-Saada.
2. Tarikh-ul-Ummat, Parts I & II (by Aslam Jairajpuri).
3. History of the Saracens, by Syeed Ameer Ali.

K. I. HUQUE,

*Secretary, Board of Intermediate and Secondary Education.*

DACCA, *the 28th June 1923.*

## Results of the Government Commercial Course Final Examination, 1923.

THE following candidates have passed the Final Examination in the compulsory subjects noted below, and in the optional subject or subjects noted against each :—

[Arranged in order of merit.]

### Government Commercial Institute.

| | | |
|---|---|---|
| 1. | Bishnupada Bhattacharjee | ... Shorthand (100 words in a minute)<br>Typewriting (45 words in a minute) |
| 2 | Benoy Brata Chakravarty | ... Typewriting (45 words in a minute) |
| 3 | Satishchandra Mandal | ... Shorthand (100 words in a minute).<br>Typewriting (35 words in a minute) |
| 4 | Pankajkumar Chatterjee | ... Shorthand (80 words in a minute).<br>Typewriting (30 words in a minute) |
| 5. | Birendranarayan Gangopadhya | ... Shorthand (80 words in a minute)<br>Typewriting (30 words in a minute) |
| 6. | Rathindramohan Sarkar | ... Shorthand (80 words in a minute).<br>Typewriting (30 words in a minute) |
| 7 | Lakshminarayan Seal | ... Typewriting (35 words in a minute) |
| 8. | Abhudeb Mukerjee | ... Typewriting (30 words in a minute) |
| 9 | Ramanikanta Adhikari | ... Shorthand (80 words in a minute)<br>Typewriting (30 words in a minute). |
| 10 | Chandicharan Dutt | ... Typewriting (35 words in a minute) |
| 11 | Sailendranath De | |
| 12 | Bhupalchandra Basu. | |
| 13 | Haribhusan Dass. | |
| 14 | Haripada Bhattacharjee | ... Typewriting (35 words in a minute) |
| 15. | Nagendrachandra Mottia | ... Typewriting (30 words in a minute) |
| 16 | Aswinikumar Chatterjee | ... Typewriting (30 words in a minute) |
| 17. | Biseswar Chaudhuri | |
| 18 | Benode Behari Mukerjee | ... Typewriting (35 words in a minute) |
| 19 | Abanranjan Ghose. | |

Compulsory subjects—

(1) English, English correspondence, including Commercial correspondence, letter drafting and précis-writing,
(2) Arithmetic, including Commercial and Mental Arithmetic,
(3) Commercial Geography,
(4) Book-keeping and
(5) Commercial Bengali.

G. K. SEN,
*Secretary, Government Commercial Institute Board (offg.).*

CALCUTTA, *the 10th July 1923.*

---

## Results of the Government Commercial Course Special Examinations, 1923.

[Arranged in order of roll number]

### Calcutta Centre.

#### Advanced Book-keeping.

| | |
|---|---|
| Jagat Bandhu Das | ... Private. |
| Profulla Kumar Dutt | ... Private. |
| Durga Pada Chakraborty | ... Government Commercial Institute |
| Dibakar Bhattacharjee | ... Ditto. |
| Tarun Gopal Dutt | ... Private |
| Narayan Chandra Banerjee | ... Government Commercial Institute. |
| Jatindra Krishna Dutt | ... Private. |
| Bibhuti Bhusan Banerjee | ... Government Commercial Institute. |
| Kishori Mohan Mozoomder | ... Ditto. |
| Narendra Nath Chatterjee | ... Ditto |
| Krishna Dhon Dev | ... Private. |
| Bejoy Kumar Mookerjee | ... Government Commercial Institute |
| Jitendra Nath Ray | ... Ditto |
| Prosutosh Biswas | ... Ditto. |
| Rishi Lall Ghosh | ... Ditto. |
| Bibhabasu Mukerjee | ... Ditto. |

| | | |
|---|---|---|
| Manindra Lall Chakravortty | ... | Goverment Commercial Institute |
| Narayan Dass Sadhu | ... | Ditto |
| Bhobotaran Mullick | ... | Ditto. |
| John Bernard Conquo | ... | Private. |
| Alwyn Clair Cockle Coxe | ... | Private |
| Keki Kaikhushru Wadia | ... | Private |
| Colin Hugh Campbell | ... | Private |
| Kalipada Lahiri | ... | Government Commercial Institute |
| Indu Kumar Ghosh | ... | Bathibor's Accountancy class |
| Miss Clarice Marry Atkinson | ... | [illegible] |
| Reginald George Woodward | ... | [illegible] |
| Tham Khai Hong | ... | Ditto |
| Satish Chandra Chaudhury | ... | Ditto. |
| Cyril Marsh | ... | Ditto |
| Surendra Nath Ray | ... | Ditto |
| Bernard Owen Connelly | .. | Ditto |
| Irenaeus Herbert Remedios | . | Ditto |
| Denzil Arthur Rundlett | ... | Ditto |
| Nisha Bhusan Ghose | ... | Commercial College |
| Kali Charan Nandy | ... | Private |

**Junior Book-keeping.**

| | | |
|---|---|---|
| Muktipada Chattopadhyaya | ... | Private. |
| Bijali Bhusan Chatterjee | .. | Private |
| Himansu Kumar Bose | ... | Private |
| Anil Coomer Khan | ... | Private |
| Jnanendra Dutt | ... | Private |
| Sasanka Bhusan Roy | ... | Private. |
| Bhudeb Chandra Mondal | . | Private |
| Surendra Nath Sen | .. | Private |
| Bijoy Krishna Bose | .. | Government Commercial Institute. |
| Sachindra Mohan Karmakar | | Ditto |
| John Bernard Conquo | ... | Private |
| Alwyn Clair Cockle Coxe | ... | Private |
| Jamshedjee Peroshaw Pestonjee | .. | Private |
| Peshotan Rustomjee Kutar | ... | Private |
| Gangeswar Chakrabartty | . | Maharaja Cossimbazar's Commercial Institute |
| Bankim Behari Ghose | ... | Government Commercial Institute |
| Rohini Kumar Chakrabartty | . | Bathibor's Accountancy Class |
| Charles deBeaufort Griffiths | ... | Ditto |
| Prabhas Chandra Chowdhury | . | Private |
| Chandra Sekhar Sett | .. | Commercial College. |
| Haralal Dutt | ... | Commercial Coaching Institute |
| Surendra Nath Sarcar | . | Ditto |
| Debendra Nath Sarcar | .. | Ditto |
| Nikunja Behari Gusthipaty | .. | Ditto |
| Ali Muhammed | . | Ditto |
| Gustaso J. Lala | .. | Bathibor's Accountancy Class |
| Gora Chand Nandi | ... | Government Commercial Institute |
| Hari Charan Dass | . | Ditto |
| Nagendra Kumar Chakrabarti | . | Ditto |
| Ganesh Chandra Bagchi | ... | Ditto |
| Ram Chandra Ganguly | ... | Ditto. |
| Siva Prosad Mukherjee | ... | Ditto |
| Prafulla Kumar Bit | ... | Ditto |
| Fani Bhusan Banerji | ... | Ditto |
| Monoranjan Chakrabarty | .. | Ditto |
| Probat Kumar Mozumdar | ... | Ditto |
| Ashwini Kumar Dutta | ... | Ditto |
| Aswini Kumar Acharya | ... | Ditto |
| Debendra Nath Dutt | ... | Ditto |
| Baidya Nath Goswami | ... | Ditto. |
| Nitya Nanda Charan Auddya | ... | Ditto |
| Bejoy Mohan Bose | ... | Ditto |

**Shorthand.**

(Speed —140 words per minute )

| | | |
|---|---|---|
| Gopal Dhon Ghattak | ... | Government Commercial Institute |
| Kanai Lall Seal | ... | Ditto. |
| Joytish Chandra Mozumdar | ... | Ditto |
| Tarak Nath Dutt | ... | Ditto |

(Speed—120 words per minute.)

| | | |
|---|---|---|
| Sushil Krishna Dutt | ... | Commercial Coaching Institute |
| Ananda Mohan Dutt | ... | Ditto |
| Phanindra Nath Ghose | ... | Ditto. |
| Golok Behari Mukherjee | ... | Private |

(Speed—100 words per minute.)

| | | |
|---|---|---|
| Santi Kumar Mitra | ... | Private |
| Annada Prasad Banerjee | ... | Private |
| Dulal Chand Mullick | ... | Maharaja Cossimbazar's Commercial Institute. |
| Kshitish Chandra Banerjee | ... | Ditto. |
| Jogesh Chandra Mitra | ... | Ditto |
| Dinesh Chandra Bhattacharjee | ... | Ditto. |
| Mohammad Basheratullah | ... | Private |
| Jatindra Narayan Bose | ... | Private |
| Dwijendra Chandra Mazumdar | ... | Private |
| Phanindra Nath Ghose | ... | Commercial Coaching Institute. |
| Indra Kumar Mukherjee | ... | Ditto |
| Deb Sankar Chatterjee | ... | Ditto |
| Prasad Chandra De | ... | Ditto |
| Nanda Dulal Roy | ... | Ditto |
| Anil Chandra Sinha | ... | Maharaja Cossimbazar's Commercial Institute. |
| Sudhir Chandra Guha | ... | Ditto |

(Speed—80 words per minute)

| | | |
|---|---|---|
| Krishna Nath Banerjee | ... | Private |
| Jnanendra Nath Chatterjee | .. | Private |
| Tarak Das Bhattacharjee | ... | Maharaja Cossimbazar's Commercial Institute |
| Rahini Kumar Karmaker | ... | Ditto |
| Satyasaran Bagchi | ... | Ditto |
| Gopal Chandra Mukherjee | ... | Commercial Coaching Institute. |
| Indu Bhusan Sanyal | ... | Ditto |
| Narendra Nath Banerjee | ... | Private |
| Santosh Kumar Mukherjee | ... | Nag's Commercial Chamber. |
| Prafulla Kumar Basu | . | Government Commercial Institute |
| Bhabesh Chandra Ghosh | .. | Ditto |
| Birendra Kumar Das | ... | Ditto |
| Pradyot Kumar Banerjee | .. | Ditto |
| Provat Kumar Mazumdar | ... | Ditto |
| Krishna Ballav Mitra | ... | Ditto |
| Gopal Chandra Das | ... | Ditto |

**Typewriting.**

(Speed—60 words per minute)

| | | |
|---|---|---|
| Subodh Kumar Mookerjee | ... | Central School of Shorthand and Typewriting. |
| Panchanon Mukherjee | ... | Private |

(Speed—50 words per minute)

| | | |
|---|---|---|
| Surendra Nath Sarcar | ... | Commercial Coaching Institute |
| Bhupendra Nath Mukherji | ... | Government Commercial Institute |

(Speed—45 words per minute)

| | | |
|---|---|---|
| Phanindra Nath Chatterjee | ... | Private |

(Speed—40 words per minute)

| | | |
|---|---|---|
| Jitendra Nath Majumder | ... | Private. |
| Narayan Chandra Banerjee | ... | Government Commercial Institute |
| Jyotsna Nath Basu | .. | Ditto |
| Chandra Sekhar Sett | ... | Commercial College |
| Madhusudan Gupta | ... | Commercial Coaching Institute. |
| Debendra Nath Sarcar | ... | Ditto. |
| Chuni Lal Bhattacharji | ... | Ditto |

(Speed—35 words per minute)

| | | |
|---|---|---|
| Rajendra Kumar Mukherjee | ... | Central School of Shorthand and Typewriting. |
| Narayan Chandra De | ... | Ditto. |
| Narendra Kumar Chatterjee | ... | Government Commercial Institute. |
| Ranga Lal Paul | ... | Ditto. |
| Pulin Behari Banerji | ... | Ditto. |
| Nur Hamid | ... | Commercial Coaching Institute. |
| Radhaballav Chakravarti | ... | Ditto |
| Rajani Kanta Mukherji | ... | Government Commercial Institute. |
| Bhabesh Chandra Ghosh | ... | Ditto |
| Benoybhusan Paul | ... | Private. |

(Speed—35 words per minute.)

| | | |
|---|---|---|
| Provat Kumar Mazumdar | ... | Government Commercial Institute. |
| Gopal Chandra Das | ... | Ditto |
| Sushil Chandra Barari | ... | Private. |
| Sarat Chandra Bhattacharyya | ... | Government Commercial Institute |
| Amarendra Nath Roy Chaudhury | ... | Ditto. |

## Dacca Centre.

### Advanced Book-keeping.

| | | |
|---|---|---|
| Chandra Bhusan Nag | ... | Commercial Academy, Dacca |
| Hira Prasad Das | .. | Ditto |
| Khagendra Nath Das | ... | Ditto |
| Prakash Chandra Bose | ... | Ditto |

### Junior Book-keeping.

| | | |
|---|---|---|
| Bhupendra Mohan Dutt Gupta | ... | Private |
| Jatindra Mohan Amin | ... | Commercial School, Dacca. |
| Mahendra Nath Guha | ... | Ditto. |
| Suresh Chandra Ghose | .. | Ditto |
| Binay Krishna Gupta | ... | Ditto. |
| Suresh Chandra Dutt | ... | Ditto |
| Monoranjan Das | ... | Ditto |
| Monmatha Nath Goswami | ... | Commercial Academy, Dacca |
| Annada Charan Dey | . | Ditto |
| Nishi Kanta Baladhikari | .. | Ditto |
| Benoy Krishna Nag | .. | Ditto |
| Kshitindra Chandra Roy | .. | Ditto |
| Nagendra Chandra Roy | ... | Ditto |
| Chandra Bhusan Nag | ... | Ditto |
| Khagendra Nath Das | .. | Ditto |
| Prakash Chandra Bose | .. | Ditto |
| Sudhir Chandra Gupta | | Ditto |
| Satyaranjan Sen | .. | Ditto |
| Pramatha Kumar Ghose | ... | Ditto |
| Rangopal Sarkar | .. | Ditto |
| Profulla Chandra Bhattacharjee | .. | Ditto. |
| Surendra Kumar Das | ... | Commercial School, Dacca |

### Shorthand.

(Speed—120 words per minute)

| | | |
|---|---|---|
| Annada Charan Dutt | ... | Commercial Academy, Dacca |

(Speed—100 words per minute)

| | | |
|---|---|---|
| Dhirendra Nath Banerjee | ... | Commercial School, Dacca |
| Sisu Kumar Das | ... | Ditto |
| Indu Bhusan Chatterjee | ... | Ditto. |
| Hemendra Kumar Das-Gupta | ... | Ditto. |
| Jatindra Mohan Amin | .. | Ditto |
| Satya Ranjan Dutt | ... | Commercial Academy, Dacca |
| Hira Prosad Das | . | Ditto |
| Khagendra Nath Das | ... | Ditto |
| Prakash Chandra Bose | ... | Ditto. |
| Narayan Chandra Sarkar | ... | Ditto |
| Paresh Nath Guha | .. | Ditto |
| Mohini Mohan Chakravarty | .. | Ditto |
| Haripada Chakravarty | ... | Ditto |
| Satya Ranjan Sen | .. | Ditto |
| Kamakhya Ch Dutt Roy | ... | Commercial Academy, Dacca |
| Sudhanshu Kumar Mitra | ... | Government Commercial Institute, Calcutta |

(Speed—80 words per minute.)

| | | |
|---|---|---|
| Digendra Chandra De Sarkar | ... | Commercial School, Dacca. |
| Manindra Kumar Gangopadhyay | ... | Commercial Academy, Dacca |
| Narayan Chandra Bhattacharjee | ... | Ditto. |
| Hari Narayan Paul | ... | Ditto |
| Subodh Chandra Roy | ... | Ditto. |
| Usha Ranjan Rudra | ... | Ditto. |
| Dhirendra Kumar Mukherjee | ... | Ditto |
| Manindra Kumar Chakravarty | ... | Ditto |
| Jogendra Kumar Ghosh | .. | Ditto |
| Nirmal Chandra Ghosal | .. | Government Commercial Institute, Calcutta |

### Typewriting.

(Speed—50 words per minute.)

| | | |
|---|---|---|
| Satyaranjan Dutt | ... | Commercial Academy, Dacca |
| Dhirendra Kumar Mukherjee | ... | Ditto. |

(Speed—45 words per minute)

| | | |
|---|---|---|
| Subodh Chandra Roy | ... | Commercial Academy, Dacca |

(Speed—40 words per minute)

| | | |
|---|---|---|
| Sishu Lal Chatterjee | ... | Commercial School, Barisal |
| Kshitish Chandra Ghose | .. | Commercial School, Dacca. |
| Nirode Krishna Majumdar | ... | Ditto |
| Nishi Kanta Baladhikari | ... | Commercial Academy, Dacca |
| Haripada Chakravarty | ... | Ditto. |
| Jogendra Chandra Day Sa | ... | Ditto |
| Kunja Lal Nag | .. | Ditto |
| Hem Nath Sarma | ... | Ditto |
| Dhirendra Chandra Choudhury | ... | Commercial Training School, Mymensingh |

(Speed—35 words per minute)

| | | |
|---|---|---|
| Pabitra Ranjan Kar | ... | Commercial School, Dacca |
| Dhirendra Nath Banerjee | .. | Ditto |
| Suresh Chandra Dutt | ... | Ditto |
| Narayan Chandra Bhattacharjee | ... | Commercial Academy Dacca |
| Khagendra Nath Das | .. | Ditto |
| Narayan Chandra Sarkar | . | Ditto |
| Usha Ranjan Rudra | .. | Ditto. |
| Manindra Kumar Chakravarty | ... | Ditto |
| Nishi Kanta Das | ... | Ditto |
| Somesh Chandra Sen | ... | Ditto |
| Ghanashyam Basak | ... | Ditto |
| Ramesh Chandra Chakravarty | ... | Ditto |
| Surendra Chandra Dass | ... | Commercial School, Dacca |

G. K SEN,
*Secretary, Government Commercial Institute Board (offg.).*

CALCUTTA, *the 10th July 1923.*

---

## FINAL TITLE COURSE (THIRD YEAR CLASS) EXAMINATION.

THE following candidates have passed the Final Title Course (Third year class) Examination held in March 1923 :—

### CALCUTTA MADRASAH.

*Second Division.*

1. Md Ansarullah
2. Md Abdul Karim

J. M. BOTTOMLEY,
*Registrar, Central Examination of Bengal Madrasah.*

---

## EDUCATION DEPARTMENT, BENGAL.

### NOTIFICATION.

THE undermentioned candidate is awarded a Post-Graduate Scholarship of Rs. 100 a month for one year with effect from the 1st July 1923. The scholarship will be drawn from the date on which the scholar actually undertakes his research work :—

| Serial No. | Name of scholar | Subject of research. | Place of work. |
|---|---|---|---|
| 1 | Babu Hem Chandra Banerjee, M A. | Problems in silent reading | Training College, Dacca. |

E. F. OATEN,
*Assistant Director of Public Instruction, Bengal.*

CALCUTTA, *the 21st July 1923.*

## NOTIFICATION.

### Test Examination of private candidates for the Matriculation Examination, 1924.

A TEST examination of private students who have not attended any high school, recognised or unrecognised, for at least one year previous to the ensuing examination, will be held at Rangpur and Darjeeling, on Monday, the 3rd December 1923, and the four following days. Such candidates only as reside in any of the districts of the Rajshahi Division and Cooch-Behar will be admitted to the examination. The term "Private Students" includes *bona fide* schoolmasters.

2. Private students are those who have not attended any school for at least one year previous to the Matriculation Examination.

3. Each private candidate will have to pay a fee of Rs. 5, which is to be remitted to the Inspector of Schools, Rajshahi Division at Jalpaiguri, and not to the undersigned personally, so as to reach him on or before the 1st November 1923, along with an application for permission to appear at the test examination. Candidates applying after the prescribed date will have to pay a fine of Rs 2 for each week's delay Under no circumstances will the admission fee be refunded. No application will, however, be received after the 30th November 1923

4. Each application (printed copy of which can be had in the office of the Inspector of Schools) for permission to appear at the test examination must be accompanied by information on the points noted below —

(*a*) The name of the school in which the candidate last studied.

(*b*) The transfer certificate (in original) granted to the candidate by the headmaster of the school in which he last read, or

(*c*) in the case of a candidate who previously appeared at the Matriculation Examination, the Registrar's receipt (in original) for the fees paid

(*d*) The age of the candidate. No candidate who has not completed the age of 16 years on the first day of the month in which the Matriculation Examination is held shall be allowed to appear at it.

(*e*) In the case of a schoolmaster, a certificate of good conduct from the Secretary of the school in which he is serving or from the Deputy Inspector of Schools of the district concerned.

(*f*) A certificate from a respectable person to the effect that the candidate has prosecuted a regular course of study and has been subjected to proper discipline, and that he has not read in any school since the last Matriculation Examination

(*g*) A statement by the candidate giving the following facts —

(1) Residence giving the names of the village, post office and district clearly.
(2) Father's name
(3) The name of the centre at which he intends to appear.
(4) Second language besides English.
(5) Vernacular language from which translation is to be made into English in English first paper
(6) Which of the following subjects to be taken up :—

(*i*) Additional mathematics
(*ii*) Additional paper in the classical language.
(*iii*) History.
(*iv*) Geography
(*v*) Elementary mechanics.

5. The Inspector of Schools on being satisfied will issue a passport for admission to the test examination. No candidate will, however, be admitted unless he is identified to the satisfaction of the headmaster of the school at which he appears

6. The headmasters of the institutions named above should direct candidates who appear at their schools to fill up the application form for permission to appear at the Matriculation Examination in their presence. These applications will be forwarded to the office of the Inspector of Schools. The Inspector of Schools will then countersign the applications of those candidates who pass the test and forward them to the candidates direct for transmission to the Registrar with the fees for the examination.

7. In no circumstances should the fee for the Matriculation Examination be sent to the Inspector's office. It should be sent to the Registrar by the candidates themselves, together with the countersigned applications.

8. The Matriculation Examination will be held in March 1924, and the applications and fees must reach the office of the Registrar on or before the date fixed by the University.

*N.B.*—A student who failed to pass the annual examination for promotion to class X at the end of the session of 1921 and then left the school can under no circumstances be allowed to appear at the examination.

**Intermediate and B. A. Examinations.**

1. Deputy Inspectors of Schools, Sub-Inspectors of Schools and *bonâ fide* matters of English Schools, who have served as such for the full period of three academical years preceding the examinations, will be admitted to the abovementioned examinations.

2. Candidates for the Intermediate and B. A. Examinations must produce certificates of character and length of service from the Secretaries of their respective schools. Candidates for the B. A Examination must forward with their applications their I. A. or F. A. certificates, and those for the Intermediate Examination their Entrance or Matriculation certificates. Those candidates who were admitted to a former examination must produce the Registrar's receipt in addition.

3. Under section 19 of the Indian Universities Act, candidates for the Intermediate and B. A. Examinations are informed that their applications for admission to these examinations will not be considered unless they enclose with their applications to this office the sanction of the Senate to appear at the said examinations. Candidates who have applied for or have obtained the special permission of the Senate for the purpose are required, under section 9, Chapter XV of the Revised Regulations dealing with the registration of University students, to apply at once to the Registrar for the registration of their names as "University students." No person will be deemed a "University student" unless and until his name has been duly registered, and none but "University students" will be eligible for admission to any University examination other than the Matriculation.

4. The printed form of application should be carefully and correctly filled in and submitted to this office on or before the 7th January 1924, together with other papers mentioned in rules 2 and 3, after which no application will be received.

5. The examinations will be held on dates to be notified by the University. Application with the countersignature of the undersigned and fees for the examination must reach the office of the Registrar on dates to be fixed by the University and must be sent to that office by the candidates direct.

M. AHMED,

*Inspector of Schools, Rajshahi Divn (offg.)*

JALPAIGURI, *the 21st July 1923.*

---

**Test Examination of the Private Candidates for the Matriculation Examination, 1924.**

(This application must reach the Office of the Inspector of Schools, Rajshahi Division, on or before the 1st November 1923.)

APPLICATION

To

THE INSPECTOR OF SCHOOLS,

RAJSHAHI DIVISION

SIR,

I request permission to present myself at the ensuing Test Examination of the Private Candidates for the Matriculation Examination of 1924.

I beg to enclose herewith my Transfer certificate / Registrar's receipt

The fee of rupees five is remitted by postal money-order.

I am,

SIR,

Yours obediently,

Address_____

## CERTIFICATE I.

This certificate is to be signed by a respectable gentleman.

I CERTIFY that the above-named candidate has prosecuted a regular course of study and has been subject to proper discipline and that he has not read in any school since the last Matriculation Examination and that he bears a good moral character.

(Signature)

Designation

Date

## CERTIFICATE II

(In case of Schoolmasters only)

I CERTIFY that Babu has been serving in School for years and bears a good moral character

Secretary to the School

Deputy Inspector of Schools,

District

## Particulars to be filled in by the candidate.

1. Name of the candidate .. ...
2. Father's name . . ..
3. Caste or creed . . .
4. Residence—
   - Village . ... ...
   - Post office ... .. ...
   - District ... ... ..
5. Age of the candidate on the 1st of March 1924.
6. Name of school in which the candidate last studied ... ... ...
7. The name of the centre at which he intends to appear at the Final Matriculation Examination ... ... ...
8. The name of the centre at which he intends to appear at the Test Examination ...
9. Vernacular language from which the translation is to be made into English in the first English paper ... ... ...
10. Additional subjects to be taken up—
    - (i) Additional Mathematics.
    - (ii) Additional paper in the classical language.
    - (iii) Drawing.
    - (iv) Geography.
    - (v) Elementary Mathematics.

# The Calcutta Gazette

WEDNESDAY, JULY 25, 1923.


## PART II.

### *Advertisements.*

### LAND SALE NOTICES.

#### Advertisement of sale.

NOTICE is hereby given that the undermentioned plots of land, no longer required by Government, situated along the Assam Bengal Railway, in the district of Mymensingh, will be put up to sale at 12 o'clock, on the 30th August 1923

The purchasers of the several plots of land will be subject to the following conditions —

*1st* —The purchasers will have no power to make any excavations on the land nearer than fifteen feet from the railway boundary, or to plough the land nearer than three feet from the same

*2nd* —If the amount of purchase money does not exceed Rs 100, the whole amount must be paid down at once

*3rd* —If the amount of purchase-money exceed Rs 100, one-fourth of the amount must be immediately deposited If the balance be not paid by noon of the fifteenth day after the sale, reckoning the day of sale as one, or if that day be a close holiday, then by noon of the first succeeding office day, the sale shall be cancelled, the sum deposited being forfeited to Government, and the lot again put up for sale at the risk of the defaulting purchaser, after issue of advertisement, as in the case of original sale

*4th* —The plots of land will be sold revenue-free to the highest bidders

*5th* —The sale will become final on receipt by the Collector of the orders of the Commissioner confirming it, and a regular conveyance will then be granted to the purchaser.

| 1 | 2 | 3 | 4 | 5 | 6 | | 7 | | 8 | 9 |
|---|---|---|---|---|---|---|---|---|---|---|
| Consecutive lot No. | Name of district | Pargana and mauza | Number of mile on which land is situate. | Situated on which side of the railway | Approximate area of lot in bighas and in acres | | Land excluded from sale from each lot. | | Commencement and termination of lot | Boundary of lot |
| | | | | | B. K. C. | Acres and decimals. | Reasons for exclusion | Acres and decimals | | |
| 1 | Mymensingh. | Pargana Mymensingh, mauza Char Iswardia | . | On the northern side of Assam-Bengal railway at Jogendranagar jute siding | . | 0·0689 | . | | | *North*—By settlement plot No. 2107 and lands of Kangugain and Jogar Mea<br>*East*—By settlement plots Nos 2174 and 2175 and lands of Ikram Sheik and Sonai Bibi.<br>*South and West*—By settlement plot No. 2108 and lands of Kutub Moral. |

D M SEN, *for* Collector

Mymensingh Collectorate, the 19th June 1923.

## Notification B.

NOTICE is hereby given, under sections 5 and 13, Act XI of 1859, that unless the arrears mentioned below are paid on or before the next latest date of payment, viz., the 28th June 1923, the undermentioned estates or shares of estates in the district of Midnapore will be put up for sale at the office of the Collector of that district on the 26th September, at 12 o'clock for the said arrears

When in columns 5, 7 and 9 of the following statement it is stated that only a share is to be sold, it is to be understood that a separate account is kept for that share —

| Tauzi No. | Name of mahal and pargana | Sadar jama of whole estate | Whether the whole estate is to be sold | If only a share is to be sold, specification of such share or shares. | Names of proprietors of property to be sold | If only a share is to be sold, the sadar jama of such share | If the whole estate is to be sold, the arrears due from it. | If only a share is to be sold, the arrears due from it | Nature and amount of demand for which to be sold. |
|---|---|---|---|---|---|---|---|---|---|
| 1 | 2 | 3 | 4 | 5 | 6 | 7 | 8 | 9 | 10 |
| | | Rs A P | | | | Rs A P | | Rs. A P | |
| 923 | Pargana Kashijora, mahal Dandeswar | 1,924 4 0 (including police) | | Residuary share excluding separate account Nos 1 to 4 only. 5 as 14 gds 2 c 2 kt share of the mahal will be sold<br>All other shares than that specified will be excluded from the sale | Gouranga Prasad Bhuian and 7 others | 689 8 6 (including police) | | 307 4 2 | |
| 947 | Pargana Kashijora, mahal Gograss Patna | 1,512 2 3 (including police). | | Separate account No 1. 10 as 13 gds 1 c 1 kt share of the mahal will be sold<br>All other shares than that specified will be excluded from the sale | Mr R K. Nag and 5 others | 1,008 1 6 (including police) | | 85 15 0 (January and March 1923), including police | |
| 1466 | Pargana Khandar mahal Barh Banshi | 19,085 0 0 | | Residuary share excluding separate account Nos 1 to 20 and 22 to 44 only<br>The following shares of the manzas will be sold — | Nagendra Kumar Nag and 10 others | 937 2 0 | | 113 5 1 (September 1921 to March 1923) | |

| Mauza— | A | G | C | Kt. | Dt |
|---|---|---|---|---|---|
| Ashapura | 0 | 4 | 1 | 2 | 1 |
| Atmarambarh | 0 | 8 | 3 | 1 | 2 |
| Atmarambarh kismat | 0 | 17 | 3 | 0 | 1 |
| Ashidangor | 0 | 17 | 3 | 0 | 1 |
| Ashidangor kismat | 0 | 17 | 3 | 0 | 1 |
| Ayimachauk | 0 | 6 | 0 | 1 | 1 |
| Bankabheri | 0 | 6 | 0 | 1 | 1 |
| Ballavbarh | 1 | 15 | 2 | 0 | 2 |
| Bara Chahara | 0 | 8 | 3 | 1 | 2 |
| Bagelighia Sana | 1 | 15 | 2 | 0 | 2 |
| Bagell Palasia | 1 | 15 | 2 | 0 | 2 |
| Bagageria | 0 | 8 | 3 | 1 | 2 |
| Bagali chak | 4 | 5 | 1 | 1 | 0 |
| Baghadangot | 0 | 8 | 3 | 1 | 2 |
| Bakhrabadpatra | 0 | 17 | 3 | 0 | 1 |
| Barhbandi | 1 | 15 | 2 | 0 | 2 |
| Baruachak | 1 | 15 | 2 | 0 | 2 |
| Banspakhuria | 4 | 5 | 1 | 1 | 0 |
| Bilkuma | 1 | 15 | 2 | 0 | 2 |
| Benode chak | 1 | 5 | 1 | 0 | 1 |
| Bishnu Pandit | 8 | 3 | 1 | 0 | 2 |
| Brindaban chak kismat | 0 | 1 | 15 | 2 | 2 |
| Bharat chak | 0 | 8 | 3 | 1 | 2 |
| Bhim chak | 3 | 0 | 0 | 0 | 0 |
| Bhojraj chak | 0 | 4 | 1 | 2 | 1 |
| Chaturbhuj chak | 0 | 8 | 3 | 1 | 2 |
| Chandagobra kismat | 0 | 8 | 3 | 1 | 2 |
| Chand kuri | 0 | 4 | 1 | 2 | 1 |
| Chapanbara | 0 | 4 | 1 | 2 | 1 |
| Chonga | 0 | 17 | 3 | 0 | 1 |
| Dalamandan chak | 0 | 8 | 3 | 1 | 2 |
| Darhra | 0 | 4 | 1 | 2 | 1 |
| Darara chak kismat | 0 | 4 | 1 | 2 | 1 |
| Dwaripatna | 0 | 17 | 3 | 0 | 1 |
| Dantorda chak | 0 | 4 | 1 | 2 | 1 |
| Duria | 0 | 11 | 1 | 0 | 0 |
| Duria chak | 0 | 17 | 3 | 0 | 1 |
| Eral chak | 1 | 5 | 1 | 0 | 1 |
| Eral Dakshin | 0 | 17 | 3 | 0 | 1 |
| Eral kismat | 1 | 5 | 1 | 0 | 1 |
| Eral Uttar | 1 | 5 | 1 | 0 | 1 |
| Fasil chak | 0 | 4 | 1 | 2 | 1 |
| Gangadasbarh kismat | 0 | 17 | 3 | 0 | 1 |
| Gangadas chak | 0 | 4 | 1 | 2 | 1 |
| Ganak chak | 0 | 17 | 3 | 0 | 1 |
| Gumoriabheri | 0 | 6 | 0 | 1 | 1 |
| Gomunda chak | 0 | 6 | 0 | 1 | 1 |
| Gopal chak | 0 | 4 | 1 | 2 | 1 |
| Haribarh | 0 | 17 | 3 | 0 | 1 |
| Harinathchak | 0 | 8 | 3 | 1 | 2 |
| Hariram | 0 | 17 | 3 | 0 | 1 |
| Hariram chak | 0 | 17 | 3 | 0 | 1 |
| Hatpatna | 1 | 15 | 2 | 0 | 2 |
| Hosenpur | 0 | 17 | 3 | 0 | 1 |
| Jal chak | 0 | 8 | 3 | 1 | 2 |
| Jadu chak | 0 | 17 | 3 | 0 | 1 |
| Jamini chak | 0 | 17 | 3 | 0 | 1 |
| Jugalbarh kismat | 0 | 17 | 3 | 0 | 1 |
| Juned chak | 0 | 17 | 3 | 0 | 1 |

| Tauzi No. | Name of mahal and pargana. | Sadar jama of whole estate. | Whether the whole estate is to be sold. | If only a share is to be sold, specification of such share or shares | Names of proprietors of property to be sold | If only a share is to be sold, the sadar jama of such share | If the whole estate is to be sold, the arrears due from it. | If only a share is to be sold, the arrears due from it | Nature and amount of demand for which to be sold |
|---|---|---|---|---|---|---|---|---|---|
| 1 | 2 | 3 | 4 | 5 | 6 | 7 | 8 | 9 | 10 |
| | | Rs A P. | | Mauza— A G. C Kt DL | | | | | |
| 1466 | Pargana Khandar, mahal Barh Bandhi | 19 085 0 0 | | Jotbori chak 0 4 1 2 1 | | | | | |
| | | | | Kalang Kathara 3 0 0 0 0 | | | | | |
| | | | | Kalagachhia chak 1 15 2 0 2 | | | | | |
| | | | | Kanchanpur 1 15 2 0 2 | | | | | |
| | | | | Kapasgeria 1 15 2 0 2 | | | | | |
| | | | | Kapasgeria kismat 1 15 2 0 2 | | | | | |
| | | | | Kasia chak 0 4 1 2 1 | | | | | |
| | | | | Kaidam 0 4 1 2 1 | | | | | |
| | | | | Kolunda 1 15 2 0 2 | | | | | |
| | | | | Krishnagenia 1 15 2 0 2 | | | | | |
| | | | | Khanika 0 4 1 2 1 | | | | | |
| | | | | Kharikabarh 0 17 3 0 1 | | | | | |
| | | | | Kharika chak 0 4 1 2 1 | | | | | |
| | | | | Khandarbho l 0 6 0 1 1 | | | | | |
| | | | | Kharan chak 0 4 1 2 1 | | | | | |
| | | | | Lal chak 0 4 1 2 1 | | | | | |
| | | | | Lawdangra 0 17 3 0 1 | | | | | |
| | | | | Luabat 1 15 2 0 2 | | | | | |
| | | | | Maharak chak 1 15 2 0 2 | | | | | |
| | | | | Madhuban chak 0 17 3 0 1 | | | | | |
| | | | | Mahabat chak 0 17 3 0 1 | | | | | |
| | | | | Mahammad Kasim chak 1 15 2 0 2 | | | | | |
| | | | | Mazafor chak 0 4 1 2 1 | | | | | |
| | | | | Mangalpur 0 17 3 0 1 | | | | | |
| | | | | Mandhar chak 1 15 2 0 2 | | | | | |
| | | | | Masagan 0 17 3 0 1 | | | | | |
| | | | | Modinahari chak 0 17 3 0 1 | | | | | |
| | | | | Madhabpur 0 17 3 0 1 | | | | | |
| | | | | Mahammad Ali chak 0 4 1 2 1 | | | | | |
| | | | | Malpari 0 8 3 1 2 | | | | | |
| | | | | Malpari chak 0 8 3 1 2 | | | | | |
| | | | | Malikara 0 4 1 2 1 | | | | | |
| | | | | Mamudpur 0 17 3 0 1 | | | | | |
| | | | | Mamudabaz 0 17 3 0 1 | | | | | |
| | | | | Mangial 1 15 2 0 2 | | | | | |
| | | | | Masa chak 1 5 0 0 1 | | | | | |
| | | | | Matkadpur 0 17 3 0 1 | | | | | |
| | | | | Matkadpur kismat 0 17 3 0 1 | | | | | |
| | | | | Mirza chak 0 17 3 0 1 | | | | | |
| | | | | Nayan chak 0 8 3 1 2 | | | | | |
| | | | | Nai 0 4 1 2 1 | | | | | |
| | | | | Nibra 1 15 2 0 2 | | | | | |
| | | | | Nibra chak 1 15 2 0 2 | | | | | |
| | | | | Nurmahammad chak 1 15 2 0 2 | | | | | |
| | | | | Nur kismat 1 15 2 0 2 | | | | | |
| | | | | Nidhua 0 8 3 1 2 | | | | | |
| | | | | Nidhua kismat 0 8 3 1 2 | | | | | |
| | | | | Nidhua chak 0 8 3 1 2 | | | | | |
| | | | | Paramananda chak kismat 0 8 3 1 2 | | | | | |
| | | | | Paschingeria 1 15 2 0 2 | | | | | |
| | | | | Pathra chak 0 17 3 0 1 | | | | | |
| | | | | Patna chak 0 6 0 1 1 | | | | | |
| | | | | Pindragoria 1 15 2 0 2 | | | | | |
| | | | | Pithapur 1 15 2 0 2 | | | | | |
| | | | | Pithapurbarh 1 15 2 0 2 | | | | | |
| | | | | Pithapur chak 1 15 2 0 2 | | | | | |
| | | | | Purbagoria 1 15 2 0 2 | | | | | |
| | | | | Putrangi 0 17 3 0 1 | | | | | |
| | | | | Prasadbarh kismat 1 0 0 0 0 | | | | | |
| | | | | Pratappur 0 17 3 0 1 | | | | | |
| | | | | Ratanchack kismat 3 0 0 0 0 | | | | | |
| | | | | Rampal chak 1 15 2 0 2 | | | | | |
| | | | | Ditto 1 15 2 0 2 | | | | | |
| | | | | Saiad Bibi chak 1 15 2 0 2 | | | | | |
| | | | | Safachar chak 1 15 2 0 2 | | | | | |
| | | | | Safi chak 1 15 2 0 2 | | | | | |
| | | | | Sufaraz chak 3 0 0 0 0 | | | | | |
| | | | | Saluka kismat 0 4 1 2 1 | | | | | |
| | | | | Sandchara 0 8 3 1 2 | | | | | |
| | | | | Samchara 0 4 1 2 1 | | | | | |
| | | | | Sahinagpur 0 17 3 0 1 | | | | | |
| | | | | Saranga chak 0 17 3 0 1 | | | | | |
| | | | | Sesai 0 17 3 0 1 | | | | | |
| | | | | Sikharchak 0 17 3 0 1 | | | | | |
| | | | | Subhadra chak 0 17 3 0 1 | | | | | |
| | | | | Sujanagor 0 17 3 0 1 | | | | | |
| | | | | Sanchar kismat 0 4 1 2 1 | | | | | |
| | | | | Saula Dakshin 0 17 3 0 1 | | | | | |
| | | | | Shyambhuian chak 1 15 2 0 2 | | | | | |
| | | | | Taladiha 0 6 0 1 1 | | | | | |
| | | | | Tulshi chak 0 4 1 2 1 | | | | | |
| | | | | Teghari Jantalida 3 0 0 0 0 | | | | | |

[ILLEGIBLE], *for* Collector

Midnapore, the 17th May 1923

## The Commissioners for the Port of Calcutta.

**Notice of sale under sections 118 and 119 of the Calcutta Port Act, III of 1890 (B.C.).**

NOTICE is hereby given that the liability of the Commissioners for the undermentioned goods consigned to order ex the undermentioned vessels has, in terms of section 113 of the abovementioned Act, ceased on the expiration of three clear days from the date of landing These goods accordingly remain on the Port Commissioners' premises at the sole risk and expense of the owners, and if not cleared on or before the 10th September 1923, on payment of all charges due, will be sold by public auction

| Date of landing. | Marks and numbers. | Quantity. | Description. |
|---|---|---|---|
| | **SHED No. 7.** | | |
| | **SS. "Matiana."** | | |
| 28th June 1923... | A W J 221 in a diamond, H C on top, B C below, 21-23 | 3 | Cases |
| 2nd July " ... | 491-4 in a triangle, A L on top, C below, 107 | 1 | Case |
| 29th June " ... | B K Paul & Co .. ... | 6 | Cases medicine |
| 30th " " ... | F E in a circle, 333-52 . ... | 20 | Cases |
| 28th " " ... | 5802 in a diamond, 253 ... ... | 1 | Cask |
| 30th " " .. | 1217 in a diamond, G C on top, M C below, 1-4 | 4 | Cases |
| 28th " " ... | 2987 29710 in a diamond, G A on top, & Co below, Lucknow | 3 | Packages soap |
| 28th " " . | 2987 29703 in a diamond, G A on top, & Co below, Lucknow | 1 | Case boot polish |
| 30th " " ... | 50117 H D D & Co in a block, M P on top . | 1 | Case medicine |
| 30th " " ... | Hafiz, 58 89 ... ... ... | 32 | Cases |
| 29th " " ... | J R D-8 in a diamond, G A on top, Z E below, 1 2 | 2 | Do |
| 29th " " ... | G 5755 in a triangle, K H on top ... | 1 | Case electric medical goods |
| 29th " " ... | = 5754 = ... ... ... | 1 | Ditto. |
| 28th " " ... | K E D 1328 in a diamond, B B & Co below, 10 | 1 | Drum |
| 30th " " ... | L E E W in a diamond, Lucknow below, 150 | 1 | Case |
| 29th " " ... | Mohamed Yakub in a block, 5-6 ... | 2 | Cases |
| 28th " " ... | D. S. ... ... ... | 5 | Cases sugar of milk. |

| Date of landing. | Marks and numbers | Quantity | Description |
|---|---|---|---|
| | **SHED No. 7—*concld*** | | |
| | **SS. "Matiana"—*concld.*** | | |
| 30th June 1923 .. | P I C in a diamond, 1 . .. | 1 | Case |
| 30th " " ... | 1015 in a diamond, B B & Co below | 1 | Case medicine |
| 28th " " ... | B P & S Lucknow ... ... | 15 | Cases whisky |
| 28th " " .. | R S A in a diamond, Lucknow below . | 10 | Cases paint and varnish |
| 30th " " ... | S A in a diamond, A L below, 9-10 . | 2 | Cases |
| 28th " " .. | S M & Co Ld in a diamond, I S on top, Allahabad below, 110-117 | 8 | Do |
| 28th " " ... | S E C 6721 in a diamond, 412 3 | 2 | Do |
| 30th " " . | Samples in a diamond, G A on top, Z E below, 1 | 1 | Case |
| 28th " " .. | T & C, 77-112 . .. | 36 | Cases |
| 29th " " .. | W G S S, 1 ... .. . | 1 | Case |
| 28th " " .. | Z & Co in a diamond, 1 | 1 | Do |
| | **SHED No. 8.** | | |
| | **SS. "Penang Maru."** | | |
| 15th June 1923 | 22 in a diamond, G S on top | 3 | Cases glass bangles |
| 16th " " | - 55 - . | 1 | Ditto |
| 15th " " . | = 23 - | 2 | Ditto |
| 15th " " ... | = 20 — | 2 | Ditto |
| 15th " " ... | — 24 = .. ... | 6 | Ditto |
| 16th " " ... | = 21 — . | 3 | Ditto |
| 15th " " .. | = 25 — .. . | 2 | Ditto |
| 15th " " ... | = 85 = ... . . | 1 | Case glass bangles |
| 14th " " ... | R in a diamond or R C in a diamond | 1 | Bag betelnuts |
| 14th " " .. | R C in a diamond or R in a diamond . | 1 | Bag sago |
| 15th " " ... | Thakur in a diamond, K C on top ... | 15 | Cases glass beads |
| 14th " " ... | A M in a diamond ... ... | 4 | Packages merchandise |
| 16th " " ... | A H ... ... ... | 1 | Package merchandise |
| 14th " " ... | M J .. ... ... | 1 | Ditto |
| 14th " " ... | N O in a diamond, S P below ... | 1 | Ditto |
| 14th " " ... | J S N in heart, D on top ... ... | 1 | Bag merchandise |
| 14th " " ... | O R J ... ... ... | 5 | Bags empty. |

| Date of landing. | Marks and numbers. | Quantity | Description. |
|---|---|---|---|
| | **SHED No. 8—*contd.*** | | |
| | **SS. "Honolulu Maru."** | | |
| 28th June 1923... | A K O ... ... .. | 2 | Bags betelnuts |
| 28th „ „ ... | 1407 in a diamond, I P on top, S C below | 7 | Cases asbestos packing |
| 28th „ „ ... | K S Co / S 141 / 14 W in a block .. ... | 20 | Cases glassware. |
| 28th „ „ ... | K S Co / S 141 / 10 W in a block ... ... | 15 | Ditto |
| 28th „ „ ... | K S Co / S 136 / 53 in a block ... ... | 12 | Ditto |
| 29th „ „ ... | Q No 3440 / R No 221 in a diamond, H A on top, M E below, 163-4 | 2 | Cases |
| 28th „ „ ... | R K C in a block, Sample on top ... | 1 | Case glassware |
| 28th „ „ ... | Thakur in a diamond, K C on top ... | 7 | Cases glass beads |
| | **SS. "Malakand."** | | |
| 23rd „ „ ... | 1093 in a triangle, A K on top, 1-10 | 10 | Bales |
| 25th „ „ ... | 153 in a diamond, A W on top, J Co below, 30. | 1 | Case |
| 25th „ „ ... | 2008 / C 3323 in a diamond, G A on top, & Co below, 20. | 1 | Do |
| 23rd „ „ ... | G C C & Co in a block, M & C on top, 508. | 1 | Do. |
| 23rd „ „ ... | M P / 50136 / H W M ... ... ... | 64 | Cases condiments |
| 25th „ „ ... | 104 / 147 in a diamond, M C on top, 28 ... | 1 | Case |
| 25th „ „ ... | = 104 / 149 =, 30 ... ... | 1 | Case |
| 25th „ „ ... | = 104 / 148 =, 29 ... ... | 1 | Case. |
| 25th „ „ ... | = 104 / 146 =, 27 ... ... | 1 | Case |
| 23rd „ „ ... | N P ... ... ... | 1 | Case olive oil. |

| Date of landing | Marks and numbers | Quantity | Description |
|---|---|---|---|
| | **SHED No. 8—*concld.*** | | |
| | **SS. "Malakand"—*concld*** | | |
| 23rd June 1923... | 2210/070 in a diamond, A OHMS D on top, Lucknow University below | 1 | Case scientific apparatus |
| 25th " " .. | R L Benares .. ... ... | 1 | Bale cotton yarn |
| 22nd " " . | C & Co Ltd C M W Ltd 9976-80 ... .. | 5 | Packages |
| 22nd " " .. | C & W Ltd C M W Ltd 9982 ... ... | 1 | Package |
| 23rd " " ... | S K S, 6-9 ... .. | 4 | Cases |
| 22nd " " ... | Bala Pershad & Sons Lucknow .. | 10 | Cases table salt |
| 23rd " " . | Ditto | 10 | Cases bath bricks |
| | **SHED No. 6.** | | |
| | **SS. "Nagato Maru."** | | |
| 30th June 1923... | C C C in a diamond, S C on top, 6-11... | 6 | Cases |
| 3rd July " .. | D/C N in a diamond, 1320-22 ... | 3 | Do |
| 2nd " " ... | Gidwaney in a block, N M on top, 181 Cawnpore below, 11-15 | 5 | Do |
| 3rd " " ... | H B in triangle, V G on top, M below, 57 | 1 | Case |
| 2nd " " ... | H M E in a block, 11 ... ... | 1 | Do |
| 30th June " ... | K C B in a diamond, O S on top, 19-25 .. | 7 | Cases |
| 3rd July " ... | 195 in a diamond, M R on top, I D Delhi below, 46-50. | 5 | Do |
| 3rd " " ... | = 194 =, 41-45 ... ... | 5 | Do. |
| 3rd " " ... | N L D in a triangle, 461 ... ... | 1 | Case |
| 3rd " " ... | S/18 3 in a block, 181 ... ... | 1 | Do |
| 2nd " " ... | 203 in a diamond, S A on top, & G below, 1626-30 | 5 | Cases |
| 3rd " " ... | S/14-4 in a block, 151 ... ... | 1 | Case |
| 30th June " ... | T L D in a block 778/807 ... ... | 30 | Cases. |
| 3rd July " ... | × in circle, 113 ... ... | 1 | Case. |

| Date of landing | Marks and numbers. | Quantity | Description. |
|---|---|---|---|
| | **SHED No. 5.** | | |
| | **SS. "Sandon Hall."** | | |
| 23rd June 1923.. | B P S Lucknow, 26 ... .. ... | 1 | Case |
| 26th „ „ ... | 173 in a diamond, M B on top, S below, 1 | 1 | Case |
| 21st „ „ .. | S A K & Co ... .. ... | 40 | Cases soap |
| | **SHED No. 6.** | | |
| | **SS. "Clan Macfadyen."** | | |
| 7th July 1923 .. | A F L, 1 ... .. ... | 1 | Drum. |
| 12th „ „ ... | A F Ld, 5 . ... .. | 1 | (Case lying in W G). |
| 6th „ „ .. | B K P & Co, $\frac{204}{08}$ .. .. | 5 | Cases |
| 6th „ „ .. | ——„——, 209 .. . | 1 | Case (lying in Hr^^ ) |
| 7th „ „ . | $\frac{500}{712}$ in a block, Belgica on top .. | 1 | Case cotton piece goods |
| 5th „ „ ... | C M T, 108 09 ... | 2 | Cases |
| 7th „ „ ... | Child & Co . ... ... | 1 | Case cigars |
| 10th „ „ ... | 1047 in a block, G Ld on side, 1-2, 5 6, 10-11 and 13 14 | 8 | Cases |
| 5th „ „ ... | = 1046 =, 9 15 .. . | 7 | Do |
| 5th „ „ ... | = 1048 —, 1-5 ... .. | 5 | Do |
| 5th „ „ ... | = 1049 =, 1-4 .. | 4 | Do |
| 10th „ „ .. | – 1043 =, 6-10 .. ... | 5 | Do |
| 5th „ „ ... | J F M . ... ... | 2 | Cases rum (lying in W. G). |
| 5th „ „ . | 3410 in a triangle, L E on top, S below, 1-7 | 7 | Cases |
| 5th „ „ ... | – 3413 -, 1 3 ... . | 3 | Do |
| 7th „ „ ... | No mark . .. ... | 1 | Bag hardware |
| 9th „ „ .. | 2100 in a triangle, R B on top, 245-50 | 6 | Cases |
| 7th „ „ ... | 102 in a diamond, R A on top, & Co below, 3168-69. | 2 | Do |
| 5th „ „ ... | $\frac{SS}{8}$, 1-11 ... ... ... | 11 | Bales |
| 6th „ „ ... | W S & S L, 3917-23 ... ... | 7 | Cases. |

| Date of landing. | Marks and numbers. | Quantity. | Description |
|---|---|---|---|
| | **SHED No. 6—*concld.*** | | |
| | **SS. "Clan Macfadyen"—*concld.*** | | |
| 11th July 1923 .. | W S & S / B, 3927-28 ... ... | 2 | Cases |
| 6th „ „ .. | —„—, 2924-26 ... ... | 3 | Do |
| 6th „ „ .. | W S & S / L P, 3929 ... | 1 | Case |
| | **SHED No. 4.** | | |
| | **SS. "Gorala."** | | |
| 28th June 1923... | E ... ... ... | 120 | Bags hornmeal |
| | **SS. "Trautenfels."** | | |
| 19th June 1923... | 3723 in a triangle, A C and M L on top, 841 | 1 | Bale |
| 21st „ „ | F R I .. ... ... | 2 | Cases toys |
| 23rd „ „ | 304 in a double triangle, H R on top, T R below, 20282 9 | 8 | Cases |
| 20th „ „ . | –257–, 16939 ... .. | 1 | Case |
| 20th „ „ ... | – 254 –, 13466 69, 13470 ... | 5 | Cases |
| 21st „ „ . | –255–, 12572 ... .. | 1 | Case |
| 20th „ „ .. | –256–, 12577 ... ... | 1 | Do |
| 20th „ „ . | –260–, 16946-8 . .. | 3 | Cases |
| 22nd „ „ | M & Co, 6044 .. ... | 1 | Case |
| 19th „ „ . | N V E, 2 . ... .. | 1 | Package merchandise |
| 20th „ „ .. | 589 in a triangle, Tom on top, 892, 893-94 | 3 | Cases |
| 20th „ „ ... | T & Co, 1016, 1019, 1023 .. ... | 3 | Do |
| 23rd „ „ ... | O H M S / 2088 in a diamond, A D on top, P H Y below, Dacca, 1386 | 1 | Case. |
| | **SHED No. 2 (M.S.).** | | |
| | **SS. "Maimyo."** | | |
| 16th June 1923 ... | 170 / F in a triangle, E G on top ... | 3 | Cases machinery |
| 12th „ „ ... | A triangle, E G on top, F below ... | 2 | Ditto. |
| | **SHED No. 4 (A Ghat).** | | |
| | **SS. "Chupra."** | | |
| 12th June 1923 ... | 629 in a triangle ... ... | 2 | Cases motor cars. |

H. H. HUDSON, Traffic Manager (offg.).

Port Commissioners' Office, Calcutta, the 25th July 1923. (1378—1)

## IMPERIAL BANK OF INDIA.

***Statement of the affairs of the Imperial Bank of India on the 12th July 1923.***

**LIABILITIES.**

| | Rs | A | P |
|---|---|---|---|
| Subscribed Capital .. .. ... ... | 11,25,00,000 | 0 | 0 |
| Capital paid up ... .. . .. | 5,62,50,000 | 0 | 0 |
| Reserve . ... . .. | 4,85,00,000 | 0 | 0 |
| Public Deposits . .. . . | 29,21,93,000 | 0 | 0 |
| Other Deposits . ... ... .. .. | 55,29,67,000 | 0 | 0 |
| Loans against securities per contra ... . | | | |
| Contingent liabilities .. . .. .. | ... | | |
| Sundries .. .. . .. | 86,57,000 | 0 | 0 |
| | 1,05,35,67,000 | 0 | 0 |

**ASSETS**

| | Rs | A | P. |
|---|---|---|---|
| Government Securities ... .. .. | 13,46,42,000 | 0 | 0 |
| Other authorized securities under the Act | 1,31,77,000 | 0 | 0 |
| Loans .. .. .. ... ... .. | 18,72,99,000 | 0 | 0 |
| Cash credits . ... . .. | 31,17,73,000 | 0 | 0 |
| Inland bills discounted and purchased | 5,15,04,000 | 0 | 0 |
| Foreign bills discounted and purchased .. | 29,72,000 | 0 | 0 |
| Bullion .. ... ... . ... ... | ..... | | |
| Dead Stock ... .. . | 2,39,63,000 | 0 | 0 |
| Liability of constituents for contingent liabilities per contra .. . .. | .... | | |
| Sundries . . ... . | 30,79,000 | 0 | 0 |
| Balances with other Banks .. . | 63,23,000 | 0 | 0 |
| | 75,17,32,000 | 0 | 0 |
| Cash . . | 31,88,35,000 | 0 | 0 |
| | 1,05,35,67,000 | 0 | 0 |

The above balance sheet includes—

| | | |
|---|---|---|
| Deposits in London ... ... .. .. .. | £ | 602,300 |
| Advances in London .. .. ... . . | £ | 248,700 |
| Cash and balances at other Banks in London | £ | 413,400 |

Percentage 33 42

Bank Rate 4%

R AITKEN,

W B HUNTER,

Managing Governors

Calcutta, the 19th July 1923

(1356—1)

## Sheriff's Sale Proclamation.

TO be peremptorily sold, pursuant to an order of the Calcutta High Court, Original Side, made in suit No 2425 of 1921 (Jogendra Nath Chowdhury *versus* Sachindra Nath Dutt) and dated the 7th day of June 1922 and in execution of a decree of this Hon'ble Court, dated the 22nd day of November 1921, by the Sheriff of Calcutta in his sale room on the ground floor of the High Court by public auction on Friday, the 17th day of August 1923, at 12 o'clock noon, the undermentioned property belonging to the defendant —

*Lot No 1* —All that the undivided two-ninths part or share of the defendant Sachindra Nath Dutt in the upper roomed brick-built messuage, lands and premises together with the piece or parcel of land thereunto belonging and containing by estimation eight cottahs be the same a little more or less situate, lying at and being premises No 28, Kalidas Singhee Lane in the town of Calcutta, holdings Nos 148 and 150, in block No XIII, North Division, and paying an annual revenue of Rs 4-2-8 to the Collector of Calcutta, and butted and bounded in the manner following, that is to say on the north by premises No 27, Kalidas Singhee Lane, on the east by Kalidas Singhee Lane, on the south partly by premises Nos 29 and 29-1, Kalidas Singhee Lane, and partly by premises No 6, Badur Bagan Street, and on the west by the premises No 10, Badur Bagan Street, being the tenanted house of late Rajendra Lal Sinha.

There is so far as appears from a search made in the office of the Registrar of Assurances, Calcutta, from the year 1865 to 1922 no encumbrances affecting the said undivided two-ninths share in the said property to be sold save and except the following —

Mortgage, dated the 26th day of September 1919, executed by Sachindra Nath Dutt in favour of Danmull Podder, of Nos 7, Baranashi Ghose Street, in Calcutta, aforesaid for securing repayment within one year of Rs. 3,000 with interest thereon at the rate 12 per cent. per annum with quarterly rests.

The sums for the recovery of which the sale has been ordered are Rs 4,009 8 with interest thereon at the rate of six per cent per annum until realization as mentioned in the said decree and Rs 241-4 6 for taxed costs under such decree with interest thereon at the rate of six per cent per annum from 24th January 1922 up to realisation besides the costs of execution

The conditions of sale may be seen at the office of the Sheriff of Calcutta on any day before the sale during the office hours and will be produced at the sale

S C Datta, Plaintiff's Attorney.

Calcutta High Court, Sheriff Office, the 16th day of July 1923

M M ALI NAKEY, Sheriff

(1379—1)

## In the Court of the 1st Subordinate Judge, Pabna.

EXECUTION CASE No 62 OF 1923 (MORTGAGE).

Pabna Dhanabhandar Company, Limited, decree-holders,

*versus*

(1) Srigobinda Chaudhury, a disqualified proprietor, represented by Prosanna Kumar Byshak, Manager Tantibund Court of Ward's Estate, (2) Benode Gobinda Chaudhury, Shebait, on behalf of family idol Gopal Jiu, judgment-debtors

THE following mortgaged property of the judgment-debtors will be sold by public auction by the Nazir of the District Judge of Pabna at 12 o'clock on the 24th August of 1923 for realisation of Rs 8,568-15 —

Taraf Durgapur under Tappa Isapnagar, comprised within tauzi No. 1/16 of the Pabna Collectorate in the district of Pabna, police-station and Sub-Registrar's office Dulai and Pabna, including all the mouzas and Jalkar within the abovementioned tauzi paying a revenue of Rs 784-2 yearly which is recorded in the names of defendant No. 1, Srigobinda Chaudhury, and defendant No 2.

M N LAHIRI, 3rd Munsif.

Pabna, the 13th July 1923 (1325—3)

NOTICE TO DEFENDANTS.

**In the Court of the Munsif of Giridih, district Hazaribagh.**

SUIT No 29 OF 1923

B. Bishunath Sahai, of Pachamba, district Hazaribagh, plaintiff, *versus* H F Pilcher, Proprietor, East Nandi Colliery, Post Box No. 2355, Calcutta, defendant

To H F. Pilcher, Proprietor, East Nandi Colliery, Post Box No 2355, Calcutta.

WHEREAS Bishunath Sahai, of Pachamba, has instituted a suit against you for the recovery of Rs 297 13

You are hereby summoned to appear in this Court in person or by a pleader duly instructed and able to answer all material questions relating to the suit or who shall be accompanied by some person able to answer all such questions on the 31st day of July 1923, at 10 o'clock in the forenoon to answer the claim, and you are directed to produce on that day all the documents upon which you intend to rely in support of your defence.

Take notice that in default of your appearance on the day before mentioned, the suit will be heard and determined in your absence

Given under my hand and the seal of this Court, this 18th day of July 1923

N N BANERJI, Munsif

Giridih, the 18th July 1923 (1354—1)

---

**In the High Court of Judicature at Fort William in Bengal (In Insolvency).**

*Re* Birendra Mohan Rakshit, insolvent

*Ex parte* Surajmul Hirawat, one of the creditors

To Birendra Mohan Rakshit the insolvent abovenamed, and Mr. A K Sircar, his Attorney, and C O Remfry, Esqr, the Official Assignee of Calcutta, and the Assignee to the estate of the insolvent abovenamed

PLEASE take notice that on Monday, the 13th day of August 1923, at the hour of 11 o'clock in the forenoon or so soon thereafter as the matter can be heard, an application will be made before the Registrar in Insolvency of this Hon'ble Court on behalf of Surajmul Hirawat the sole proprietor of the firm of Champa Lall Rai Chand one of the creditors of the insolvent abovenamed for an order that the adjudication order of the 6th day of December 1920 be annulled and that the costs of and incidental to this application, to be taxed by the Taxing Officer of this Hon'ble Court, be paid to Mr S C. Datta, attorney for the said Surajmul Hirawat by the said Official Assignee out of the funds in his hands or such further or other order be made in the premises as to this Hon'ble Court may seem fit

Dated this 18th day of July 1923

S. C. DATTA,

Attorney at-Law and Attorney for the creditor Surajmul Hirawat

*Grounds.*

1. Petition of Surajmul Hirawat verified by his affidavit affirmed on the 17th day of July 1923
2. Records of this matter.

*N B*—You need not appear unless you have good and valid cause to show to the contrary

(1352—1—1391)

NOTICE TO CREDITORS OF THE DATE OF HEARING OF AN INSOLVENCY PETITION

(*Section 19 of the Provincial Insolvency Act, V of 1920*)

**In the Court of the District Judge of Birbhum.**

INSOLVENCY APPLICATION No 13 OF 1923

WHEREAS Dasarathi Mandol, son of late Beni Madhab Mandol, of Islampur, ch. Dubrajpur, district Birbhum, has applied to this Court by a petition, dated the 11th May 1923, to be declared an insolvent under the Provincial Insolvency Act, V of 1920, this is to give notice to the creditors of the said debtor that the Court has fixed the 14th day of August 1923 for the hearing of the aforesaid petition and the examination of the debtor

K C NAG, District Judge

Suri, the 17th July 1923 (1347—1)

---

NOTICE TO CREDITORS OF THE DATE OF HEARING OF AN INSOLVENCY PETITION

[*Section 19 of the Provincial Insolvency Act, V of 1920*]

**In the Court of the District Judge at Chittagong.**

INSOLVENCY APPLICATION No 18 OF 1923

WHEREAS Amir Ali Serang, son of Jennat Ali, of Burirchar police station Hathazari, district Chittagong, has applied to this Court, by a petition, dated 28th June 1923, to be declared an insolvent under the Provincial Insolvency Act, V of 1920, this is to give notice to his creditors that the Court has fixed the 10th day of August 1923 for the hearing of the aforesaid petition and the examination of the debtor.

J W NELSON, District Judge

Chittagong, the 13th July 1923

(1333—1)

---

ORDER OF ADJUDICATION

[*Section 27 of the Provincial Insolvency Act, V of 1920*]

**In the Court of the District Judge at Chittagong.**

INSOLVENCY APPLICATION No 13 OF 1923

PURSUANT to a petition, dated 11th May 1923, filed by Lakshaman Chandra Poddar, son of Aradhan Poddar, of Poddar Kanchana, police-station Satkania, district Chittagong, and on the application of the debtor himself and on reading his petition and hearing his pleader it is ordered that the debtor be and the said debtor is adjudged insolvent, and is directed to apply for discharge within six months Mr Perceval is appointed Receiver

Dated this 14th day of July 1923

J W NELSON, District Judge

(1357—1)

---

ORDER OF ADJUDICATION

[*Section 27 of the Provincial Insolvency Act, V of 1920*]

**In the Court of the District Judge at Chittagong.**

INSOLVENCY APPLICATION No. 9 OF 1923

PURSUANT to a petition, dated 10th April 1923, filed by Abdul Jalil, son of Munshi Abdul Samad of Feringhee-Bazar, police-station Kotwali, district Chittagong, and on the application of the debtor himself and on reading his petition it is ordered that the debtor be and the said debtor is hereby adjudged insolvent and is directed to apply for discharge within six months Mr Perceval is appointed Receiver

Dated this 17th day of July 1923

J W NELSON, District Judge

(1358—1)

### In the Court of the District Judge of Dinajpur.

INSOLVENCY CASES Nos 67 AND 68 OF 1923

RAHIM BAKASA MAHAMED, son of Dhingai Sha, deceased, Hikimuddin Mahammed, son of Rahim Bakasa Mahamed, residents of Gopalpur, police-station Thakurgaon, district Dinajpur, have applied to this Court to be declared insolvents The 6th day of August 1923 has been fixed for the examination of the petitioners at Dinajpur

B SARKAR, *for* District Judge

Dinajpur, the 15th July 1923 (1335—1)

### In the Court of the Additional District Judge of Hooghly at Howrah.

INSOLVENCY PETITION No 39 OF 1918

NOTICE is hereby given that the adjudication of Baroda Charan Neogi, son of late Ram Chandra Neogi, of Jaduberia, thana Uluberia, district Hooghly, was, on the 14th June 1923, annulled under section 35 read with section 34 of the Act.

A. A. PATTERSON, Addl District Judge

Howrah, the 9th July 1923 (1326—1—1386)

### In the Court of the Additional District Judge of Hooghly at Howrah.

NOTICE is hereby given, under the Provincial Insolvency Act V of 1920, to his creditors that the insolvency petition of Bejoy Kristo Ray, son of late Preonath Ray, of Khurut, 10 Acharjeepara Lane, thana Sibpur, district Hooghly has been admitted by this Court as No. 37 of 1923, and that the 8th August 1923 has been fixed for the hearing thereof

A A PATTERSON, Additional District Judge

Howrah, the 13th July 1923. (1344—1—1389)

### In the Court of the Additional District Judge of Hooghly at Howrah.

NOTICE is hereby given, under the Provincial Insolvency Act of V 1920, to his creditors that the insolvency petition of Shaikh Ajjar Rahaman, son of late Ajahar Ali, of Panchparah, thana Sankrail, district Hooghly, has been admitted by this Court as No 60 of 1923 and that the 8th August 1923 has been fixed for the hearing thereof

A A. PATTERSON, Additional District Judge

Howrah, the 13th July 1923. (1345—1—1390)

### In the Court of the District Judge of Jalpaiguri.

INSOLVENCY CASE No 2 OF 1923

Mohar Sing Roy, applicant.

THE abovenamed applicant has applied to this Court for discharge and the Court has fixed the 29th day of August 1923 for hearing the application at Jalpaiguri

C. BARTLEI, District Judge

Jalpaiguri, the 18th day of July 1923 (1355—1)

### In the Court of the District Judge of Nadia.

INSOLVENCY CASE No 28 OF 1923

Petitioner Basoiaddin Biswas, son of late Aslat Biswas, of Syamnagar, police-station Krishnagunja, district Nadia

NOTICE is hereby given, under clause 2 of sections 19 of the Provincial Insolvency Act, V of 1920, to his creditors that the abovenamed petitioner has filed an insolvency petition, and that 4th August 1923 has been fixed for the hearing thereof

B. G CHATTERJI, District Judge

Krishnagar, the 11th July 1923

(1334—1)

### In the Court of the District Judge of Nadia.

INSOLVENCY CASE No 20 OF 1913

Petitioner Jagabandhu Saha, son of late Lalbihari Saha, of Navadwip, Bowbazar, police-station Navadwip, district Nadia

NOTICE is hereby given, under section 41 of the Provincial Insolvency Act, V of 1920, or section 44 of Act III of 1907, to his creditors that the above-named insolvent has applied for discharge and that the 4th August 1923 has been fixed for the hearing thereof

B G CHATTERJEE, District Judge

Krishnagar, the 19th July 1923. (1359—1)

ORDER ANNULLING ADJUDICATION

### In the Court of the District Judge of 24-Parganas.

INSOLVENCY CASE No 19 OF 1921

Laksmi Narayan Das, son of late Bem Madhab Das, of 1-1, Momimpore Gulley, thana Ekbalpore, applicant, insolvent

THE abovenamed insolvent has failed to apply for an order of discharge within the period specified by the Court and reading the report of the Receiver it is ordered that the order of adjudication dated 29th March 1922 against the said Laksmi Narayan Das be and the same is hereby annulled.

Dated this 25th day of May 1923

S K GHOSE, District Judge

NOTICE.

### In the 4th Court of the Sub-Judge of 24-Parganas.

INSOLVENCY CASE No 45 OF 1923

Abdul Gafur of Kaknora, thana Jagaddal, 24-Parganas, applicant.

To Nagor Mol of Borabazar Sutapatti, Calcutta, and others, creditors.

ON the 3rd day of April 1923 it was ordered that the matter of the petition of the applicant be heard on the 6th day of August 1923, and that the said applicant do attend to be examined by this Court on that date.

A. T. PAL, Sub-Judge

Alipore, the 16th May 1923. (977—1—1381)

NOTICE.

**In the 4th Court of the Sub-Judge of 24-Parganas.**

INSOLVENCY CASE No. 64 OF 1923

Shaikh Asraddi of Rajahgowalia, thana Bistupur, 24-Parganas, applicant

To Golpor Rahaman of Rajahgowalia, thana Bistupur, 24 Parganas, and others, creditors

ON the 28th day of March 1923 it was ordered that the matter of the petition of the applicant be heard on the 13th August 1923, and that the said applicant do attend to be examined by this Court on that date

A T. PAL, Sub-Judge

Alipore, the 16th May 1923. (978—1—1382)

---

NOTICE

**In the 4th Court of the Sub-Judge of 24-Parganas.**

INSOLVENCY CASE No 65 OF 1923

Jogendra Nath Chakraverty, of Sorufnagore, thana Basirhat, 24-Parganas, applicant

To Lalit Mohan Chakraverty, of Chinsurah, district Hooghly, and others, creditors.

ON the 4th day of April 1923, it was ordered that the matter of the petition of the applicant be heard on the 6th August 1923 and that the said applicant do attend to be examined by this Court on that date.

A T PAL, Sub-Judge

Alipore, the 16th May 1923 (979—1—1383)

---

NOTICE

**In the 4th Court of the Sub-Judge of 24-Parganas.**

INSOLVENCY CASE No 72 OF 1923

Kusal Sing, of No 24, Halderbagan Lane, thana Manik-tala, 24-Parganas, applicant

To Asha Debi, of 17, Harrison Road, Calcutta, and others, creditors

ON the 4th day of April 1923, it was ordered that the matter of the petition of the applicant be heard on the 6th August 1923 and that the said applicant do attend to be examined by this Court on that date

A T PAL, Sub-Judge.

Alipore, the 16th May 1923. (980—1—1384)

---

NOTICE

**In the 4th Court of the Sub-Judge of 24-Parganas.**

INSOLVENCY CASE No 74 OF 1923

Akhil Chandra Mondal, of Rudrapur, thana Baraset, 24-Parganas, applicant

To Brojo Nath Mondal, of Pakepole, thana Baraset, 24-Parganas, and others, creditors

ON the 28th day of March 1923 it was ordered that the matter of the petition of the applicant be heard on the 6th August 1923 and that the said applicant do attend to be examined by this Court on that date

A T PAL, Sub-Judge.

Alipore, the 16th May 1923. (981—1—19[illegible]

---

NOTICE.

**In the 4th Court of the Sub-Judge of 24-Parganas.**

INSOLVENCY CASE No. 69 OF 1923

Hobu Hossain Molla, of [illegible]kra, thana Metiabruz, 24-Parganas, applicant.

To Janem Khan, of Mudiali, thana Metiabruz, 24-Parganas, and others, creditors

ON the 26th day of April 1923 it was ordered that the matter of the petition of the applicant be heard on the 27th August 1923 and that the said applicant do attend to be examined by this Court on that date

A T PAL, Sub-Judge.

Alipore, the 25th June 1923 (1196—1—1374)

---

NOTICE

**In the 4th Court of the Sub-Judge of 24-Parganas.**

INSOLVENCY CASE No 76 OF 1923

Shaikh Mansurali, of 36-2, Narikeldanga Main Road, thana Beleghatta, applicant

To Mahammad Rafi Khan Kabuli of 52, Talpukur Road, thana Beleghatta, 24-Parganas, and others, creditors

ON the 28th day of April 1923 it was ordered that the matter of the petition of the applicant be heard on the 13th August 1923 and that the said applicant do attend to be examined by this Court on that date

A T PAL, Sub Judge

Alipore, the 25th June 1923 (1197—1—1375)

---

NOTICE

**In the 4th Court of the Sub-Judge of 24-Parganas.**

INSOLVENCY CASE No 80 OF 1923

Chandi Charan Das, of Dum Dum thana Alambazar, 24-Parganas, applicant

To Karim Khan, of 83, Nebutola Street, Calcutta, and others, creditors

ON the 26th day of April 1923 it was ordered that the matter of the petition of the applicant be heard on the 27th August 1923 and that the said applicant do attend to be examined by this Court on that date

A. T PAL, Sub-Judge

Alipore, the 25th June 1923 (1198—1—1376)

---

NOTICE

**In the 4th Court of the Sub-Judge of 24-Parganas.**

INSOLVENCY CASE No 99 OF 1923.

Shaikh Golap, of Paikpara Kansari Bagan, thana Chitpur, 24-Parganas, applicant

To Jangal Panday, of Paikpara, thana Chitpur, 24-Parganas, and others, creditors.

ON the 30th day of April 19[illegible] it was ordered that the applicant be heard on the matter of the petition and that the said applicant do the 13th August [illegible] examined by this Court on that date. attend [illegible]

A. T PAL, Sub-Judge

Alipore, the 25th June 1923 (1199—1—1377)

NOTICE

**In the 4th Court of the Sub-Judge of 24-Parganas.**

INSOLVENCY CASE No 102 OF 1923

N. Hakku *alias* Hickie, of 3, Delarganj Road, thana Chitpur, applicant

To Kesan Chand Kotary, of 148, Cotton Street, Calcutta, and others, creditors.

ON the 27th day of April 1923 it was ordered that the matter of the petition of the applicant be heard on the 27th August 1923 and that the said applicant do attend to be examined by this Court on that date

A T. PAL, Sub-Judge

Alipore, the 25th June 1923 (1200—1—1378)

NOTICE

**In the 4th Court of the Sub-Judge of 24-Parganas.**

INSOLVENCY CASE No 103 OF 1923

Lotai Sha of Kiddirpur Company Bazar, thana Watgunj, applicant

To Kali Charan Halder, of Behala, thana Behala, 24-Parganas, and others, creditors

ON the 27th day of April 1923 it was ordered that the matter of the petition of the applicant be heard on the 27th August 1923 and that the said applicant do attend to be examined by this Court on that date.

A T. PAL, Sub-Judge

Alipore, the 25th June 1923 (1201—1—1379)

NOTICE

**In the 4th Court of the Sub-Judge of 24-Parganas.**

INSOLVENCY CASE No 106 OF 1923.

Hemanta Kumar Dutta, of 45, Khelat Babu's Lane, Tala, Chitpur, 24-Parganas, applicant

To Nikunja Behari Roy Chaudhuri, of 15-4, Natherbagan Lane, Calcutta, and others, creditors

ON the 27th day of April 1923 it was ordered that the matter of the petition of the applicant be heard on the 27th August 1923 and that the said applicant do attend to be examined by this Court on that date.

A. T PAL, Sub-Judge.

Alipore, the 25th June 1923. (1202—1—1380)

PROVAT KUMAR SEN, B L, intends to be enrolled as a Vakil of the High Court, Calcutta.

(1209—4—1278)

WANTED candidates for admission into the Amin class of the B G Technical School, Rangpur. Students passing the M E or M V examinations and the annual examinations for promotion to class VII (4th class) of H. E schools, above 16 years old, are qualified for admission, but preference will be given to students of higher classes of H. E schools and specially passed and plucked Matriculates

There are two scholarships of Rs 10 each a month tenable for one year for the two best boys of this class. Session commences from July. There is a Hindu hostel attached to the school. Mahammadan boys may put up at the Hare Moslem Hostel.

Apply for rules with half anna stamps.

SIDDHESWAR SHAHA, Superintendent,
B G. Technical School, Rangpur.

Rangpur, the 5th June 1923.

**Jamshedpur Technical Institute.**

APPLICATIONS are invited from students desirous of studying metallurgy at the Jamshedpur Technical Institute Five students will be selected from this province, who are natives of or are domiciled in Bengal. Of these, two will be non-Hindus The next session will commence on November 1st

A combined theoretical and practical three years' course is given at the institute and the works in the metallurgy of iron and steel During the training each student will be allowed a monthly stipend of Rs 60 On the completion of the course, successful students may be required to enter into an agreement to serve the Tata Iron and Steel Company for five years, in which case they will be given a position in the works on a salary of not less than Rs 200 per month.

The minimum qualification required is the Intermediate Science or Engineering of a recognised University or the Cambridge Higher School Certificate Examination and the subjects passed must include Physics, Chemistry and Mathematics Students who have passed the Final Examination of the Mechanical, Electrical or the Mining Classes of the Bengal Engineering College are also eligible for admission. Candidates must be under 22 years of age, and those selected will be required to produce a certificate of physical fitness

Applications will be received by the undersigned up to the 31st July 1923 Candidates should state their age, academic qualifications, the province they come from, weight, height, abdomen and chest measurements in their applications

Only copies of certificates should be enclosed

Original certificates will be called for later on from the applicants selected

D. B. MEEK, Director of Industries, Bengal

40-1A, Free School Street, Calcutta, the 12th July 1923

NOTICE.

**Imperial Bank of India.**

THE Members of the Local Board have made the following change in the Bank's Establishment —

Mr H M Wigley to officiate as Superintendent, Government Account Department, as from the 18th July 1923, *vice* Mr H Dancy, transferred

By order,

S. A H SITWELL, Secretary and Treasurer.

Calcutta, the 18th July 1923. (1346—1)

NOTICE.

**Imperial Bank of India.**

A BRANCH of the Imperial Bank of India will be opened at Serajgunge on the 23rd July 1923 under the charge of Mr H C. Mukerjee.

The members of the Local Board have made the following change in the Bank's Establishment —

Mr A. J Elder to act as officer-in-charge at Darjeeling Branch as from the 13th July 1923, *vice* Mr. J. R. Fergie, transferred.

By order,

S A. H. SITWELL,

Secretary and Treasurer.

Calcutta, the 18th July 1923. (1358—1)

## Imperial Bank of India.

NOTICE

THE Annual General Meeting of the shareholders on the Calcutta Register of the Imperial Bank of India will be held at the Calcutta Head Office on Wednesday, the 22nd August, at 10-15 A M

By order of the Central Board,

S A H SIMWELL,
Secretary and Treasurer

Calcutta, the 20th July 1923 (1377—1)

## Public Works Department, Bengal.

NORTHERN CIRCLE—DARJEELING DIVISION.

SEALED tenders in Public Works Department Form No K-2 are invited from reliable contractors for the construction of the works noted below

Tenders will be received by the Executive Engineer, Darjeeling, up to 12 noon of 15th August 1923 and will be opened by him in his office at 11 A M on the following day in the presence of any tenderers who may wish to be present

The envelope enclosing tender should be distinctly marked 'Tender for Dow Hill Dormitory, Kurseong"

2 Forms of tender, plans of the building, the schedule of quantities and the items of works to be executed, specifications, particulars regarding materials which will be supplied by the Public Works Department and their rates, and all other necessary information may be had on personal application to the undersigned during working days between the hours of 11 and 1 o'clock.

| Serial No | Name of work | Total estimate amount excluding contingencies. |
|---|---|---|
| | | Rs |
| I. | Constructing a new Dormitory building in the Dow Hill Girls' School, Kurseong .. | 1,20,898 |
| II. | Wood work for the above building which will be executed by Chinese labour, *e g*, doors and windows, planked flooring and walling, staircases, panelled partitions, wardrobe cupboards, boot lockers, etc . | 33,000 |

3. The contractors may quote for the complete building as mentioned in (I) or for wood work only as mentioned in (II). Rates quoted should include all materials and tools and plant necessary

4 The undersigned does not bind himself to accept the lowest or any tender

5 A sum of Rs 200 should be deposited as earnest money with the tender, which will be returned in full to the unsuccessful tenderers

C W TANDY GREEN, A.M I C E,
Executive Engineer, Darjeeling Division.

Darjeeling, the 12th July 1923.

## To Let.

TWO spacious corrugated iron godowns at Ultadanga, bearing premises Nos. 3 and 4, Canal Circular Road, will be let on moderate rent for a period not exceeding three years

D N. SENGUPTA,
*Executive Engineer, Canals Division.*

Calcutta, the 19th July 1923.

## The Commissioners for the Port of Calcutta.

IT is hereby notified under section 118 of the Calcutta Port Act of 1890 that the undernoted goods, if not removed within 15 days, a payment of all charges due, will be sold by public auction —

| Quantity | Marks. | Where lying | Owner |
|---|---|---|---|
| 2,750 pieces 2nd class bricks | R.N | Tolkalghat | Unknown. |

H H HUDSON, Traffic Manager (offg.).

Port Commissioners' Office, Calcutta, the 20th July 1923

(1372—1)

## Notice.

THE Bengal and Madras Service Family Pension Fund which is provisionally managed and assisted by Government has for its object the provision of monthly pensions for the maintenance of the widows and children of subscribers and is open, with certain exceptions, to all active and pensioned members of the Uncovenanted Service of Government (except those serving under the Government of Bombay), and to Local Fund servants earning pensions from Government Some of the special features of the fund are—(1) that widowed daughters incapable of remarriage or children labouring under such mental or bodily infirmities as incapacitate them from earning their livelihood or preclude the possibility of marriage (in case of a daughter) are admitted to its benefits, and (2) that subscribers to the Widows' and Daughters' branches are entitled to a refund of 30 per cent. of the premia paid, should the nominees predecease them after five years of admission. The second quinquennial valuation of the fund has been completed by the Actuary to the Government of India and his report discloses very favourable results For forms of application and rules of the Fund apply to the Accountant-General, Central Revenues, Imperial Secretariat Buildings, Calcutta.

## Lost.

THE undermentioned Government Promissory Notes —

| No | Loan | Amount. | Originally standing in the name of |
|---|---|---|---|
| | | Rs | |
| 083731 | 3 per cent of 1896 97 | 2,500 | Kamini Debee |
| 083732 | Ditto | 2,500 | Ditto |
| 083733 | Ditto | 2,500 | Ditto. |
| 177290 | 3½ per cent of 1854 55 | 1,000 | Ditto |
| 177291 | Ditto | 1,000 | Ditto |
| 177292 | Ditto | 1 000 | Ditto |
| 330178 | 3½ per cent of 1865 | 500 | Satya Priya Bhattacharjee and Shyam Lall Bhattacharjee, Executors of Kamini Debee |

the proprietors by whom they were never endorsed to any other person, having been lost, notice is hereby given that payment of the above Notes and the interest thereupon have been stopped at the Public Debt Office, Imperial Bank of India, Calcutta, and that application is about to be made for the issue of duplicates in favour of Satya Priya Bhattacharjee and Shyam Lall Bhattacharjee, Executors of Kamini Debee The public are cautioned against purchasing or otherwise dealing with the abovementioned securities

Name of the Advertiser—Shyam Lall Bhattacharjee

Residence—Sthal-Nohata P O (Pabna district).

Present address—243, Bowbazar Street

(1332—3—1392)

### Lost.

THE Government Promissory notes Nos. 090611 and 090612 of the 3½ per cent. loan of 1900-01 for Rs 1,000 each, originally standing in the name of Hara Sundari Debi, the proprietress, by whom they were never endorsed to any other person, having been lost, notice is hereby given that payment of the above notes and the interest thereupon have been stopped at the Public Debt Office, Imperial Bank of India, Calcutta, and that application is about to be made for the issue of duplicates in favour of the proprietress The public are cautioned against purchasing or otherwise dealing with the abovementioned securities.

MAHESH CHANDRA LAHIRI,
SARAI CHANDRA LAHIRI,
(Successors in the Estate of late Hara Sundari Debi)

Address—Village and post office Bhandarpur, police-station Badalgachi, district Rajshahi

(850—3—1303)

### Stolen.

THE Government Promissory Notes Nos 123482, 131911, 122395 140123 and 147734 of the 3½ per cent loan of 1854-55 for Rs 1 000 each, originally standing in the name of the Ram Lall Sadhukhan, the proprietor, by whom they were never endorsed to any other person having been stolen notice is hereby given that payment of the above notes, and the interest thereupon have been stopped at the Public Debt Office, Imperial Bank of India, Calcutta, and that application is about to be made for the issue of duplicates in favour of Kanai Lall Pramanik, Amirta Lall Pramanik and Sambhu Nath Pramanik The public are cautioned against purchasing or otherwise dealing with the above-mentioned securities

Name of the Advertiser—Sambhu Nath Pramanik
Residence—No 11, Grey Street, Calcutta

(1027—3—1304)

### In the matter of the Indian Companies Act, VII of 1913, and
### In the matter of the Eastern Peninsular Navigation Co., Limited.

BY an order made by the High Court of Judicature at Fort William in Bengal in the above matter, dated the 13th day of July 1923, on the petition of Walter Harrison Crafts of and residing on board the SS *Panay* in the Port of Calcutta, ship's officer and creditor of the abovenamed Company, it was ordered that the abovenamed Company should be wound up by the said Court and it was further ordered that Mr Ranajit Ray, Chartered Accountant of No 1, Royal Exchange Place, should continue to act as the Provisional Liquidator pending the appointment of an Official Liquidator upon his furnishing security to the satisfaction of the Registrar

Dated this 20th day of July 1923

LESLIE & HINDS, Attorneys for the Petitioner

Lindhe Chambers, 6, Hastings Street, Calcutta

(1248—1)

### In the matter of the Indian Companies Act, VII of 1913, and
### In the matter of the New Pioneer Sugar Mills, Limited.

THE Honourable Mr Justice Greaves has by an order, dated the 4th day of May 1923, appointed Mr. Ranajit Ray, of No 1 Royal Exchange Place, Chartered Accountant, to be Official Liquidator of the above-named Company.

Dated this 16th day of July 1923

R. RAY, Official Liquidator.

(1331—1)

### In the matter of the Indian Companies Act, VII of 1913, and
### In the matter of the Eastern Peninsula Navigation Company, Limited.

THE Hon'ble Mr Justice Greaves has, by an order, dated the 26th day of June 1923, appointed Mr R Ray of No 1, Royal Exchange Place, to be Provisional Liquidator of the abovenamed Company

Dated this 17th day of July 1923

R RAY, Provisional Liquidator

(1343—1)

### In the matter of the Indian Companies Act, 1913, and
### In the matter of Salutaris, Ltd. (in liquidation).

NOTICE is hereby given in pursuance of section 217 (*1*) of the Indian Companies Act, 1913, that a general meeting of shareholders of the abovenamed Company will be held at the office of the liquidator, F 1, Clive Buildings, Calcutta, on Thursday, the 30th day of August 1923, at 11 30 A M, for the purpose of having an account laid before them showing the manner in which the winding up has been conducted and the property of the Company disposed of, and of hearing any explanation that may be given by the liquidator and also of determining by extraordinary resolution the manner in which the books, accounts and documents of the Company and of the liquidator thereof shall be disposed of

R C. TIDDY, Liquidator

Calcutta, the 12th July 1923 (1322—1—1387)

### In the matter of the Indian Companies Act, 1913, and
### In the matter of the Dooars Tea & Trading Co., Ltd., in liquidation.

NOTICE is hereby given that a general meeting of the abovenamed Company will be held at No 26, Strand Road, Calcutta, on Friday, the 17th August 1923, at 3 P M, for the purpose of having an account laid before them showing the manner in which the winding up has been conducted and the property of the Company disposed of and of hearing any explanation that may be given by the Liquidators and also of determining by extraordinary resolution the manner in which the books, accounts, documents of the Company and of the Liquidators thereof shall be disposed of

R MUKHERJEE,
G. SANYAL, } Liquidators

Calcutta, the 13th July 1923 (1328—1—1388)

### In the matter of the Indian Companies Act, 1913, and
### In the matter of the Kinuri Coal Co., Limited (in liquidation).

NOTICE is hereby given that at an extraordinary general meeting of the members of the abovenamed Company duly convened and held at Nos 1 and 2, Hare Street, in the town of Calcutta on the 16th day of July 1923, the resolution below mentioned was passed as an extraordinary resolution.

"That it has been proved to the satisfaction of this meeting that the Company by reason of its liabilities is unable to continue its business and that it is resolved that the Company be wound up voluntarily and that Messrs. Dugald McKechnie, Charles Ernest Walker, Kenneth Blair Dunlop and Joseph Benjamin Stanley be appointed Liquidators of the Company jointly and severally for the purpose of such winding up on the remuneration at their usual scale of fees"

KENNETH B DUNLOP, *for* Self and Co-Liquidators.

25, Mangoe Lane, Calcutta, the 20th July 1923.

(1368—1)

**In the matter of the Indian Companies Act, 1913, and**

**In the matter of the Kinuri Coal Co., Limited (in liquidation).**

NOTICE is hereby given pursuant to section 209 of the Indian Companies Act, 1913, that a meeting of the creditors of the abovenamed Company will be held at 25, Mangoe Lane, Calcutta, on Wednesday, the 8th day of August 1923, at 5 P M

KENNETH B DUNLOP, *for* Self and Co Liquidators.

25, Mangoe Lane, Calcutta, the 20th July 1923

(1369—1)

**In the matter of the Indian Companies Act, 1913, and**

**In the matter of the Civil and Sanitary Engineering and General Construction Company, Limited (in liquidation).**

NOTICE is hereby given pursuant to section 209 of the Indian Companies Act, 1913, that a meeting of the creditors of the abovenamed Company will be held at 25, Mangoe Lane, Calcutta, on Wednesday, the 8th day of August 1923, at 5-15 P M

J B STANLEY, Liquidator

25, Mangoe Lane, Calcutta, the 20th July 1923

(1371—1)

**In the matter of the Indian Companies Act, 1913, and**

**In the matter of the Civil and Sanitary Engineering and General Construction Company, Limited (in liquidation).**

NOTICE is hereby given that at an Extraordinary General Meeting of the members of the abovenamed Company duly convened and held at Chartered Bank Buildings, in the town of Calcutta, on the 16th day of July 1923, the resolutions below mentioned were passed as Extraordinary Resolutions —

(1) "That the Company cannot by reason of its liabilities continue to carry on its business and accordingly that the Company be wound up voluntarily"

(2) "That Mr Joseph Benjamin Stanley be appointed as liquidator"

J B STANLEY, Liquidator

25, Mangoe Lane, Calcutta, the 20th July 1923

(1370—1)

**Descriptive Catalogue of Sanskrit Manuscripts.**

**PARTS I, II, and III of a Descriptive Catalogue** of the Sanskrit Manuscripts in the Library of the Calcutta Sanskrit College, prepared by Pandit Hrishikesh Sastri and Babu Siva Chandra Guh, M A., B.L., of that College, are offered to the public for sale The Catalogue having to be completed in 23 parts the price of each part is 12 annas a copy exclusive of postage Copies can be obtained from the Principal of the Sanskrit College, Calcutta.

## Post Office.

### Despatch of Sea-borne Mails.

| MAILS FOR— | Day or date of closing of mails | LATEST HOURS OF POSTING AT THE G P.O | | | |
|---|---|---|---|---|---|
| | | UNREGISTERED LETTERS AND PACKETS | | REGISTERED LETTERS AND PACKETS | |
| | | Without late fee. | With late fee * | Without late fee. | With late fee * |
| | | P M | P M | P M | P.M |
| United Kingdom, Europe, Aden, Egypt, East and West Africa and America ... ... | Thursday ... | 5-45 | 6-45 | 4-45 | 5-15 |
| Ceylon ... ... ... ... | Daily .. | 4-15 | 4 45 | 3-15 | 3-45 |
| † Australia and New Zealand (*vid* Colombo) .. | July 25 ... | 4-15 | 4-45 | ... | ... |
| Straits Settlements, French Indo-China, Federated Malay States, Philippine Islands, Netherlands-India Siam, China and Japan per SS "Fook Sang" | " 23 ... | 2-30 | 3 0 | 2-0 | 2-30 |
| Burma ... ... ... ... | " 23 ... | 7-30 | 8-0 | 5-0 | 6-0 |
| Port Blair (*vid* Rangoon) ... ... ... | " 30 ... | 7-30 | 8-0 | 5-0 | 6-0 |

NOTE —The latest date and hour for booking Money Orders and Parcels for despatch by the Homeward English mail is Wednesday, 3 P M., and Thursday noon respectively.

* The late fee is 4 annas for each registered or unregistered article of the Letter Mail to any place in the countries named above except for Aden, Burma, Ceylon and Port Blair, the late fee for which is ½ anna for unregistered articles and 2 annas for registered articles Letters are accepted with late fee only on occasions when a direct mail is closed by the Calcutta G P O for foreign countries

† When there is no direct mail from Calcutta, correspondence for South Africa and Mauritius posted up to 5-15 P M in the Calcutta G. P. O is despatched to Bombay and correspondence for Australia, New Zealand and Japan posted up to 4-15 P M to Colombo for transmission by the first available steamer

Calcutta, G P. O., the 21st July 1923.

H M RICHARDSON, Presidency Postmaster.

## CINCHONA FACTORY PRODUCTS.

By order of the Government of Bengal Cinchona Factory Products will be sold by the **Superintendent, Juvenile Jail, Alipore,** at the undernoted rates from the 1st June 1923 :—

### Quinine Sulphate.

| | |
|---|---|
| For 60 lbs and above in one delivery ... ... ... ... | Rs 27 per lb. |
| For 6 lbs and over but less than 60 lbs. in one delivery ... ... ... | " 28 " |
| For any quantity less than 6 lbs. ... ... .. ... | " 29 " |

### Quinine Hydrochloride.

| | |
|---|---|
| For 60 lbs and above in one delivery ... ... .. .. | Rs. 35 per lb |
| For 6 lbs and over but less than 60 lbs. in one delivery ... ... ... | " 36 " |
| For any quantity less than 6 lbs. ... ... ... ... | " 37 " |

### Quinine Di-Hydrochloride.

| | |
|---|---|
| For 60 lbs. and above in one delivery ... ... ... ... | Rs. 38 per lb. |
| For 6 lbs and over but less than 60 lbs in one delivery ... ... ... | " 39 " |
| For any quantity less than 6 lbs ... ... ... ... ... | " 40 " |

### Cinchonidine Sulphate and Cinchonine Sulphate.

| | |
|---|---|
| For not less than 6 lbs in one delivery ... ... ... ... | Rs. 12 per lb. |
| For any quantity less than 6 lbs. ... ... ... ... ... | " 13 " |

### Cinchona Febrifuge Powder.

| | |
|---|---|
| For not less than 6 lbs in one delivery ... ... ... . | Rs 8 per lb |
| For any quantity less than 6 lbs ... . ... ... .. | " 9 " |

### Cinchona Febrifuge Tablets.

| | |
|---|---|
| For not less than 6 lbs in one delivery ... ... ... . | Rs 9 per lb. |
| For any quantity less than 6 lbs ... ... ... ... ... | " 10 " |

### Quinoidine Tablets.

| | |
|---|---|
| For not less than 6 lbs in one delivery ... ... ... ... | Rs 7 per lb |
| For any quantity less than 6 lbs. ... ... ... ... | " 8 " |

### Quinoidine (in Mass).

| | |
|---|---|
| For not less than 6 lbs in one delivery ... ... .. .. | Rs 6 per lb. |
| For any quantity less than 6 lbs ... ... ... ... .. | " 7 " |

### Quinidine Sulphate.

| | |
|---|---|
| For any quantity less than 6 lbs ... ... ... ... ... | Rs. 39 per lb |

**Quinine Sulphate** is for sale to Government Institutions and Missionaries only. It is not for sale to Private Firms or the General Public.

**Cinchona Febrifuge** in Powder and Tablet form (when in stock) is for sale to Government Institutions, Missionaries and the General Public.

Quinine Sulphate will be supplied to Hospitals and Dispensaries of this Presidency only at the wholesale rate of Rs. 27 per lb., irrespective of quantities. For all other purchasers the rates given above will apply.

*Transit charges extra in every case.*

The system of payment is by—*Cash in advance*—by "*Treasury Chalans*" which should accompany the order or indent.

In cases where this is not possible, payment should be made by "*Remittance Transfer Receipts*" or crossed "*Cheques.*"

Indents unaccompanied by Cash in advance will be sent Value Payable Post.

In the case of *Government Officers* payments will be recovered by *Book Transfer* or *Countersigned Invoices* in the event of *Cash* not accompanying the Indent by "*Treasury Chalans.*" *R T. R*, or *Cheques.*

2. Price and postage must accompany the price of the drug (when the drug is required by post).

3. The name of the Railway and Steamer Station or Post-Office must be written distinctly when the parcels are required by Rail, Steamer or by Post

4. A scale of postage is given below :—

For ½ lb. 4 annas, ¾ lb. 5 annas, 1 lb. 8 annas, 1½ lbs. 11 annas, 2 lbs. 14 annas, 2½ lbs. Re 1-1, 3 lbs. Re. 1-1, 3½ lbs. Re. 1-4, 4 lbs. Re. 1-7, 4½ lbs. Re. 1-13, 5 lbs. Re. 1-13, 6 lbs Rs. 2.

Local sale at the Jail gate from 7 to 10 A.M., and 2 to 4 P.M

*N.B.*—Postage stamps are not accepted as revenue.

**Government reserve the right to alter the price without notice.**

## GOVERNMENT PUBLICATIONS FOR SALE.

**At the Bengal Secretariat Book Depot, Writers' Buildings, Calcutta, and by the following Agents:—**

### AGENTS IN INDIA.

Messrs Thacker, Spink & Co., Calcutta and Simla

Messrs. Newman & Co., Calcutta

Messrs Higginbotham & Co, Madras

Messrs Thacker & Co, Ld., Bombay

Messrs. A J. Combridge & Co, Bombay

The Superintendent, American Baptist Mission Press, Rangoon.

Mrs Radhabai Atmaram Sagoon, Bombay

Messrs R Cambray & Co, Calcutta

Rai Sahib M Gulab Singh & Sons, Proprietors of the Mufid-i-am Press, Lahore, Punjab

Messrs Thompson & Co, Madras

Messrs S Murthy & Co., Madras

Messrs Gopal Narayan & Co, Bombay

Messrs. B Banerjee & Co, 25, Cornwallis Street, Calcutta

Messrs. S K Lahiri & Co. Printers and Booksellers, College Street, Calcutta

Messrs V Kalyanarama Iyer & Co, Booksellers, etc, Madras

Messrs D B Taraporevala & Sons, Booksellers, 190, Hornby Road, Fort, Bombay

Messrs G A Natesan & Co Madras

The Indian School Supply Depôt, 309, Bowbazar, Calcutta

Mr. Ramnath Sunder, Bombay.

Messrs A M and J Ferguson, Ceylon.

Messrs Temple & Co, Madras

Babu S. C. Talukdar, Proprietor, Students & Co., Cooch Behar

Messrs. Ramchandra Govind & Son, Booksellers and Publishers, Kalbadevi, Bombay

Messrs Butterworth & Co (India), Ld., Calcutta.

The Weldon Library, 18-5, Chowringhee Road, Calcutta

Rai M C Sarkar Bahadur & Sons, 90 2A, Harrison Road, Calcutta

The Proprietor of the Newal Kishore Press, Lucknow

The Standard Literature Company, Limited, 13-1, Old Court House Street, Calcutta

Mr G N Haldar, Calcutta

Messrs Vas & Co, Madura

Messrs A H Wheeler & Co, Allahabad, Calcutta and Bombay

M R Ry E M. Gopalakrishna Kone, Madura

Messrs Rama Krishna & Sons, Anarkali Street, Lahore

The Manager, "Hitavada," Nagpur

The Young Men's Christian Association Press, Calcutta

Messrs Lall Chand & Sons, 76, Lower Circular Road, Calcutta

The Standard Bookstall, Karachi

Mr. Mangaldas Harkisandas, Surat.

Messrs Kursandas Narandas & Sons, Surat

Munshi Seeta Ram, Managing Proprietor' Indian Army Book Depôt, Juhi, Cawnpore

The Proprietor, New Kitabkhana, Poona.

Babu Jadunath Haldar, Muktear and Revenue Agent, Gorabazar, Murshidabad

The Proprietor, International Buddhist Book Depôt, 4, Chandney Chowk, 1st Lane, Calcutta

Manager, Imperial Book Depot, Delhi

Oxford Book and Stationery Co, Delhi.

### AGENTS IN GREAT BRITAIN.

Messrs. A. Constable & Co, 10, Orange Street, Leicester Square, London, W.C

Messrs Grindlay & Co, 54, Parliament Street, London, S W.

Messrs Kegan, Paul, Trench, Trübner & Co, 68-74, Carter Lane, London, E.C, Oriental Department, 39, New Oxford Street, London, W C

Mr. B. Quaritch, 11, Grafton Street, New Bond Street, London, W.

Messrs. W Thacker & Co, 2, Creed Lane, Ludgate Hill, London, E.C

Messrs P S King & Son, 2 & 4, Great Smith Street, Westminster, London, S.W.

Messrs H S King & Co, 65, Cornhill, London, E C.

Mr. B H Blackwell, 50-51, Broad Street, Oxford.

Messrs Deighton Bell & Co, Ld, Trinity Street, Cambridge

Messrs Luzac & Co, 46, Great Russell Street, London, W C

Messrs Oliver and Boyd, Tweeddale Court, Edinburgh.

Messrs E Ponsonby, Limited, 116, Grafton Street, Dublin

Mr T Fisher Unwin, Limited, 1, Adelphi Terrace, London, W C.

Messrs J Wheldon and Wesley, Limited, 2, 3 and 4, Arthur Street, New Oxford Street, London, W.C 2.

### AGENTS ON THE CONTINENT.

Mr. Ernest Leroux, Rue Bonaparte, Paris, France.

Mr Otto Harrassowitz, Leipzig.

Mr Martinus Nijhoff, The Hague, Holland.

Messrs R Friedländer & Sohn, Berlin.

NOTICE.—Books required for private use can be purchased Applications should be accompained by remittance in each case.

All remittances on account of subscriptions to or prices of Gazettes, Indian Law Reports or other Government publications available for sale at the Bengal Secretariat Book Depôt, or for cost of advertisements published in the Gazette should be made payable to the "Treasurer, Bengal Secretariat, Calcutta" Advices of such remittances, if separately sent, should be addressed to the "Accountant, Bengal Secretariat" All advertisements intended for publication in the *Calcutta Gazette* should be sent direct to the Superintendent, Government Printing, Bengal.

Books required for the Public Service should be obtained through the Heads of Departments.

## NEW PUBLICATIONS ISSUED DURING THE CURRENT QUARTER.

### Acts, Bills and Legislative Council Proceedings.

**Proceedings of the Bengal Legislative Council for the meetings held on the 20th to 23rd and 27th and 28th November 1922, Vol. X.** Rs 2 (7a)

**India Act, VII of 1870 (the Court-fees Act) as modified in its application to Bengal up to the 1st February 1923.** As 8 (3a)

**India Act, II of 1899 (the Indian Stamp Act) as modified by India Acts up to the 1st August 1921 and by the Bengal Stamp (Amendment) Act, 1922.** As. 14 (4a.)

### MISCELLANEOUS PUBLICATIONS.

**Administration—**

**Report on the—of Bengal during 1920-21.** Foolscap, board, cloth Rs. 7. (12a)

**Agriculture(al)—**

**Report on the operations of the Department of—Bengal for the year 1921-22.** Foolscap, paper cover Rs 2-9. (6a.)

**—Statistics of Bengal, 1921-22.** Foolscap, paper cover Re. 1-12 (2½a)

**Civil List—**

**Quarterly—for Bengal, as corrected up to 1st January 1923.** Super royal 8vo, paper cover. Rs. 3. (11a)

**Classified List—**

**—and Distribution Return of Establishment of the Irrigat— Department Bengal, corrected up to 1st January 1923.** Super royal 8vo, paper cover Re. 1-6. (2a)

**Co-operative—**

**List of—Societies in the district of Darjeeling, corrected up to 30th June 1922.** Foolscap, paper cover Re 1-6. (2a)

**Report on the working of—Societies in Bengal, 1921-22.** Foolscap, paper cover Re. 1-12 (3a.)

**Examinations—**

**Text Books for—in Oriental Languages—**

**Persian—**

**Hadiqa-i-Fasahat. A selection from the Diary of Nasiru-d-din Shah, the Tarikh-i-Sasaniyan and a private account of the Indian Mutiny by an eye-witness. (Higher Standard text book.)** Rs 3-8. (4a.)

**Gulistan of Sady. Edited in Persian with punctuation and the necessary vowel marks by W. Nassau Lees, LL.D. (Higher Proficiency text book).** Rs 4-8. (4a.)

**Siyahat Nama-i-Ibrahim Beg. Edited by Muhammad Kazim Shirazi under the supervision of Lt.-Col. D. C. Phillott, F.A.S.B. (Higher Proficiency text book)** Rs. 5. (14a.)

**Diwan-i-Sarkhus. Published under the supervision of Lt.-Col. D. C. Phillott, F.A.S.B. (Higher Proficiency text book).** Rs. 3. (4a.)

**Diwan-i-Andalib. Edited by M. K. Shirazi under the supervision of Lt.-Col. Phillott. (Higher Proficiency text book.)** Rs 4. (7a.)

**Akhlaq-i-Jalali. Edited by M. K. Shirazi under the supervision of Lt.-Col. Phillott. (Degree of Honour text book.)** Rs. 5 12 (11a.)

**Waqayi-i-Nimat Khan-i-Ali. Edited by Otto Rothfeld, B.A. (Oxon.), F.R.G.S., I.C.S. (Degree of Honour text book.)** Rs. 2 (3a.)

**Diwan-i-Hafiz. Edited by Major H. S. Jarrett. (Degree of Honour text book.)** Rs. 2. (7a)

**Qasaid-i-Qaani. Edited by Md. K. Shirazi under the supervision of Lt.-Col. Phillott. (Degree of Honour text book.)** Rs 7-8 (14a.)

**Specimens (facsimile) of Persian manuscripts for Degree of Honour and Higher Proficiency Examinations. Published by the Board of Examiners, Fort William.** Rs. 6. (12a.)

**Examinations**—*contd*

**Text Books for—in Oriental Languages**—*concld*

**Arabic—**

**Ar-Rauzatu-z-Zakiyah. Compiled by R. F. Azoo. (Higher Standard text book.)** Rs 5. (7*a*)

**Glossary to Ar-Rauzatu-z-Zakiyah.** Rs 6-4 (6*a*)

**Maqamat-ul-Hariri. Published under the supervision of Major H. S. Jarrett. (Degree of Honour text book.)** Rs. 2-8. (5*a*)

**Diwan-i-Hamasah. A Selection of Arabic Poems by Abu Tammam Habib Ibn Aws Al-Tayi. Edited by Mawlawi Kabir-ud-din Ahmad (Degree of Honour text book.)** Rs. 3-10 (5*a*)

**Sab—'Mu'allaqat (Degree of Honour text book).** As. 12 (2*a*.)

**Sanskrit—**

**Kali Dasa's Raghuvansam (Expurgated text for High Proficiency). Edited by Gobin Lal Bonnerjee, B.A., Kaviratna, under the supervision of Major W. G. Grey, I.A.** Rs 2-8 (4*a*)

**Hindi—**

**Raj Niti. A collection of fables originally translated from the Hitopodesa into the Braj language. Revised and annotated by Pandit Gobin Lal Bonnerjee, B.A., Kaviratna, under the supervision of Major C. L. Peart, I.A. (Proficiency text book for Civil and High Proficiency text-book for Military.)** Rs 3 (4*a*)

**Prem Sagar, Selections from—(Higher Standard obligatory text book for Military).** Rs 2-8 (3*a*)

**Satsaiya of Bihari and Lala Candrica by Cri Lallu Lal Kavi, edited with an introduction and Notes by G. A. Grierson, C.I.E., Ph.D., I.C.S. (Degree of Honour text book.)** Rs 5 (14*a*)

**Bengali—**

**Subha Vivaha. (Proficiency text book).** Paper bound. As. 12 (2*a*.) Cloth bound Re. 1 (3*a*)

**Question papers for—in Oriental languages—**

**Specimen of Examination Papers with Mss. in Facsimile set by the Board of Examiners for 1902-03, 1903-04, 1904-05 and 1908-09.** Rs 3 (3½ *a*) per year

**Specimen of Examination Papers with Mss. in Facsimile set by the Board of Examiners for 1909-10, 1910-11 and 1914-15.** Rs 3-8 (3½*a*) per year

**Specimen of Examination Papers with Mss. in Facsimile set by the Board of Examiners for 1912-13 and 1913-14.** Rs 2 8 (3½*a*)

**High Proficiency—**

**Bengali, for examinations held in October 1919, April 1921, June 1921, October 1921, April 1922, October 1922 and January 1923.** Re 1 (1*a*) for each examination.

**Hindi, for examinations held in October 1921 and October 1922 and at Lucknow in October 1922.** Re 1 (1*a*) for each examination

**Sanskrit, for examinations held in October 1921, January 1922, April 1922 and January 1923.** Re. 1 (1*a*) for each examination

**Arabic, for examinations held in April 1916 and April 1922.** Re. 1 (1*a*) for each examination

**Persian, for examinations held in January 1921 and July 1921.** Re. 1 (1*a*.) for each examination.

**Proficiency—**

**Urdu, for examinations held in January 1922, April 1922, do. Lahore, do. Lucknow, July 1922, September 1922 (Lahore), October 1922 and October 1922, Lucknow.** Re 1 (1*a*.) for each examination

**Bengali, for examinations held in January 1916, April 1916, October 1920, October 1921, January 1922, April 1922, July 1922.** Re 1 (1*a*.) for each examination

**Hindi, for examinations held in November 1915, do. Lahore, April 1916, July 1921 October 1921, October 1921 (Lucknow), April 1922 and January 1923.** Re 1 (1*a* for each examination.

**Examinations**—*concld.*

**Questions papers for—in Oriental Languages**—*concld*

**Higher Standard—**

**Sanskrit, for examinations held in October 1920, April 1921, October 1921, January 1922, April 1922 and July 1922.** As. 8 (1*a*.) for each examination.

**Persian, for examinations held in January 1921, March 1921, April 1922 (Lahore), July 1922, October 1922, and October 1922 (Lucknow).** As 8 (1*a*) for each examination

**Teachership—**

**Bengali, for examinations held in January 1917, April 1917, July 1917, October 1917 and April 1918.** Re 1 (1*a*) for each examination

**Hindi, for examinations held in July 1919 and July 1920.** Re. 1 (1*a*.) for each examination

**Degree of Honour—**

**Hindi, for examination held in April 1921.** Rs 2 (1*a*.)

**Sanskrit, for examination held in October 1921.** Rs 2 (1*a*.)

**Persian, for examinations held in December 1916, April 1919 and April 1922.** Rs 2 (1*a*.) for each examination

**Bengali, for examination held in January 1919 and January 1923.** Rs 2 (1*a*) for each examination

**Question paper for clerkship—**

**For examinations held in August 1916, August 1917, August 1919, November 1919, September 1920, September 1921 and October 1922.** Re. 1-4 (1*a*) per set

**Excise—**

**Administration Report of the Department, Bengal, for the year 1921-22.** Foolscap, paper cover Rs 3. (3½*a*)

**Executive and Judicial—**

**Report of the Committee appointed to elaborate a practical working scheme for the separation of—Functions in the Administration of Bengal and to report on the cost thereof, 1922.** Foolscap, paper cover Re. 1-4 (4*a*)

**Forest—**

**Annual Progress Report on—Administration of the Presidency of Bengal for the year 1921-22.** Foolscap, paper cover Rs 2-4 (3*a*.)

**Health, Public—**

**Annual Report of the Director of—for Bengal, 1920.** Foolscap, paper cover. Rs 2. (3½*a*.) **For 1921.** Rs 2-12. (4*a*)

**Land Revenue—**

**Report on the—Administration of the Presidency of Bengal for the year 1921-22.** Foolscap, paper cover Rs 3-4 (3*a*)

**Municipal—**

**Bengal—Election Rules, corrected up to 1st April 1922.** Foolscap, stitched pamphlet. As 6 (1*a*)

**Racial Distinctions—**

**Report of the Committee appointed to consider the—in criminal procedure applicable to Indians and non-Indians, 1922.** Foolscap, paper cover As. 9-6 (2*a*)

**Records—**

**Proceedings of the Controlling Council of Revenue at Murshidabad, Vols. VI, VII and VIII, 18th July to 30th December 1771.** Foolscap, paper cover Rs. 16 4 (Re. 1.)

**Retrenchment—**

**Report of the Bengal—Committee.** Royal 8vo.; paper cover Re. 1. (4*a*)

**Tenancy—**

**Report of the Committee appointed to consider the amendment of the Bengal —Act, 1885.** Foolscap. Published 1923. Re. 1 (6*a*.)

**Vaccination—**

**Annual Statistical Returns and Short Notes on—in Bengal for the year 1920-21.** Foolscap, paper cover. As. 14. (2a) **For 1921-22.** As. 12 (2½a)

**NEW PUBLICATIONS ISSUED BETWEEN 1st JULY and 31st DECEMBER 1922.**

**Acts, Bills and Legislative Council Proceedings.**

**Bengal Act VI of 1922 [Bengal Court-fees (Amendment No. II)].** 3p (6p)

**Bengal Act VII of 1922 [Bengal Excise (Amendment)].** 3p. (6p)

**Bengal Act VIII of 1922 [Bengal Village Chaukidari (Amendment).** 3p. (6p)

**Bengal Act IX of 1879 [Court of Wards] as modified up to 1st June 1922.** As 8. (1a).

**India Act II of 1910 [Indian Paper Currency] as modified up to 1st December 1921, in Bengali.** As 12 (1a.)

**India Act II of 1922 [Indian Factories (Amendment)] in Bengali.** As 8. (1a)

**India Act XIV of 1922 [Indian Press Law Repeal and Amendment] in Bengali.** As. 12 (1a)

**A Bill further to amend the Indian Penal Code, 1860, in Bengali.** Foolscap. As. 8 (6p.)

**Proceedings of the Bengal Legislative Council for the meetings held on the 18th, 23th to 24th and 29th to 31st March 1922, Vol. VII, No. 5.** Rs 2 (6½a)

**Proceedings of the Bengal Legislative Council for the meetings held on the 3rd to 7th and 10th to 13th July 1922, Vol. VIII.** Rs 2 10 (9a)

**Proceedings of the Bengal Legislative Council for the meetings held on the 23rd to 25th and 28th to 31st August 1922, Vol. IX.** Rs 2 (7½a.)

**Proceedings of the Bengal Legislative Council for the meetings held on the 20th to 23rd and 27th and 28th November 1922, Vol. X.** Rs 2 (7a)

**MISCELLANEOUS PUBLICATIONS.**

**Administration—**

**Report on the—of Bengal during 1919-20.** Foolscap, board, cloth Rs 7. (12a)

**Boards, District—**

**Resolution reviewing the Reports on the working of the—in Bengal, 1920-21.** Foolscap, paper cover As 12 (2a.)

**Carbide—**

**Rules framed under the Indian Petroleum Act, 1899, to regulate the importation, possession and transport of—of calcium in Bengal, corrected up to 1st July 1922.** Foolscap, paper cover As 8 (2a)

**Cinchona—**

**Annual Report of the Government—Plantations and Factory in Bengal for the year 1921-22.** Foolscap, paper cover As 8 (1½a.).

**Civil List—**

**Quarterly—for Bengal, as corrected up to 1st October 1922.** Super royal 8vo, Paper cover Rs 3 (11a.)

**Companies—**

**Annual Report on the Administration of the Indian—Act, 1913, Provident Insurance Societies Act, 1912, Indian Life Assurance Companies Act, 1912, and the Societies Registration Act, 1860, in Bengal for the year 1921-22.** Foolscap, paper cover Rs 3. (4a.)

**Co-operative—**

**List of—societies in the district of Jessore, corrected up to 31st December 1920.** Foolscap, paper cover. Rs. 5-8 (11a)

**Education—**

**Primary—, Second Report on the Expansion and Improvement of—in Bengal, 1922, by E. E. Biss.** Re. 1-6 (4a.)

**Hospitals—**

**Report on the working of—and dispensaries under the Government of Bengal for the year 1921.** Foolscap, limp paper. Rs 7. (7a)

**Irrigation—**

**Classified List and Distribution Return of Establishment of—Department, corrected up to 1st October 1922.** Re 1-6. (2a.)

**Jails—**

**Rules for the superintendence and management of—and subsidiary—in Bengal, Vol. II, Appendices.** Sixth edn. Super royal 8vo, board, paper cover. Rs 4 8. (12a)

**Market Fund Rules—**

**Western Duars—for the district of Jalpaiguri, 1922.** Foolscap, paper cover Rs 7-8 (4a)

**Motor—**

**Rules regulating the use of—Vehicles in Calcutta (including suburbs) and the Municipality of Howrah, corrected up to 31st December 1922.** Foolscap, paper cover As 6 (1a)

**List of—Vehicles registered in Calcutta, corrected up to 31st March 1922.** Royal 8vo, board, paper cover Rs 3 (6a.)

**Public Works—**

**Classified List and Distribution Return of—Department, Roads and Buildings Establishment, corrected up to 1st July 1922.** Re. 1-5 (2a)

**Records—**

**Catalogue of the English —, 1758-1858, preserved in the Historical Record Room of the Government of Bengal.** Demy 4to, board, paper cover Rs 3-12 (5a.)

**Proceedings of the Controlling Council of Revenue at Murshidabad, Vol. V, 1st April to 15th July 1771.** Foolscap, paper cover Rs. 11-8 (14a.)

**Trade—**

**Report on the—carried by rail and river in Bengal during 1920-21.** Foolscap, board, paper cover. Rs 2 8 (7a.)

**Trade of Calcutta during April 1922.** Foolscap, paper cover As. 2 (1a)

[25-7-1923]

## NOTICE.

Advertisements, Notices, etc., intended for insertion in this Part of the Gazette cannot be received after noon on Saturday.

# The Calcutta Gazette

WEDNESDAY, JULY 25, 1923


## PART IV.

***Bills introduced in the Bengal Legislative Council, Report of Select Committees presented or to be presented in that Council, and Bills published before introduction in that Council.***

### GOVERNMENT OF BENGAL.

#### LEGISLATIVE DEPARTMENT.

NOTIFICATION.

*No. 1336L, dated the 21st July, 1923.*—The following Report of the Select Committee on the Calcutta Suppression of Immoral Traffic Bill, 1923 (with the Bill, as amended by the Committee), is hereby published for general information.

## REPORT OF THE SELECT COMMITTEE ON THE CALCUTTA SUPPRESSION OF IMMORAL TRAFFIC BILL, 1923.

We, the undersigned members of the Select Committee, to which the Bill for the suppression of Immoral Traffic in Calcutta and its suburbs was referred, have considered the Bill and the papers noted at the end of this paragraph, and have the honour to submit this, our report, with the Bill, as amended by us annexed hereto In reprinting the Bill, all changes made by us have, so far as possible, been underlined.

*Papers No. 1.*

(1) Letter, dated the 10th May, 1923, from the Calcutta Missionary Conference.

(2) Letter, dated the 14th May, 1923, from the Honorary Secretary, Bengal Social Service League.

(3) Letter No. 139J.J., dated the 23rd/26th May, 1923, from the Commissioner, Presidency Division.

*Papers No. 2.*

(1) Letter No. 61J.D., dated the 23rd May, 1923, from Mr. H. P. Duval, I.C.S., Secretary to the Government of Bengal, Judicial Department.

(2) Letter, dated 21st May, 1923, from the Calcutta Vigilance Association.

*Paper No. 3*

Letter No. 236, dated the 17th May, 1923, from the General Secretary, European Association, Calcutta.

*Papers No. 4.*

(1) Letter No 287, dated the 8th June, 1923, from the Honorary Secretary, British Indian Association.

(2) Letter, dated the 8th June, 1923, from the Secretary, Indian Christian Association.

(3) Letter, dated the 8th June, 1923, from the Secretary, the Anglo-Indian and Domiciled European Association.

*Paper No. 5.*

Letter, dated the 11th June, 1923, from the Secretary, Indian Association.

*Paper No. 6.*

Letter No. $\frac{2783}{D.D\ 124\text{-}23}$, dated the 14th June, 1923, from the Commissioner of Police, Calcutta.

*Paper No. 7.*

Letter, dated the 28th June, 1923, from the Honorary Secretary, Calcutta League of Women Workers.

*Paper No. 8.*

Letter No. S. 1830, dated the 5th July, 1923, from the Chairman of the Corporation of Calcutta.

We realise that the Bill in no way attempts to provide a comprehensive remedy for the evils of immoral traffic and we have confined ourselves to an endeavour to effect some control in three main directions : firstly to diminish the supply of prostitutes by striking at the procurers and the men who live on the earnings of prostitution ; secondly to provide for the removal from brothels of minor girls under 16 and the punishment for detention of any girl or woman in a brothel against her will ; and thirdly to protect as far as possible students and other youths from temptation by penalising solicitation. We are fully conscious that the Bill in itself will go a very short way if it is not supplemented by a persistent vigorous organisation for rescue work and the proper aftercare of girls and women removed from brothels, and we feel that though Government may give valuable assistance, this is work that must in the main depend upon private effort. Some of us have great doubt whether the risks it is necessary to take in the endeavour to protect youths

from solicitation do not outweigh the benefits of such a course but the majority are of opinion that the existing evil is sufficiently grave to warrant an attempt being made to suppress it and feel that it is our duty to place before the Council provisions to this end.

2. The more important changes we have made in the Bill are as follows :—

*Long title, preamble and clause 1.*—We consider that the extent of the Bill should be the same as the extent of the Bengal Children Act except that the operation of the present Act should not extend to the Municipality of Howrah as such extension would involve the setting up of a separate machinery to work it. We have made a drafting amendment accordingly in the long title, extent clause and the definitions.

*Clause 2, sub-clause (1).*—The words "or disorderly house" have been omitted from the definition as unnecessary and misleading.

*Clause 2, new sub-clause (3).*—It is necessary that a definition of the words "public place" and "street" should be inserted so as to bring the wording of this Act into line with the Calcutta Police Act A sub-clause has been inserted to this effect.

*Clauses 3 and 4.*—We have transferred clause 3 to the end of the Bill so as to make the decision on this clause subsequent to that on clause 4.

*Clause 4.*—As already stated the majority of us consider that it is our duty to propose for the acceptance of the Council provisions for dealing with the evils of solicitation. We are all agreed that clause 4 as originally drawn was too wide and involved considerable dangers, we have defined more exactly the offence to be penalised but we have left the clause so as to include solicitation from balconies and verandahs. We have provided that the powers of arrest shall be exercised only by selected officers nominated by the Commissioner of Police and have specifically included sergeants among the officers who may be so nominated as there appears to be some doubt whether they are above or below the rank of Sub-Inspector The majority of us feel strongly that if an attempt is to be made to cope with the evil no further weakening of the section is possible, if the powers of arrest without complaint are not to be entrusted to police officers the only possible alternative is to retain the present law and abandon the attempt to bring solicitation under further control. The minority are prepared to accept this alternative rather than run the risks they consider are involved in the grant of these powers of arrest.

*Clause 5.*—Agreeing with the Commissioner of Police we consider that the powers conferred by this clause should not be exercised by a Deputy Commissioner of Police, but that the Commissioner of Police should be empowered to refer any case to a Deputy Commissioner of Police for inquiry. We also consider that the order for the discontinuance of a brothel should be made not merely as a personal order against the owner, lessor, manager or occupier but as a general order against the public, the notice served on the owner, occupier or lessor being to the effect that the house, room or place which has been used as a brothel or disorderly house or for the purpose of a business of common prostitute shall not again be so used We are impressed by the fact that otherwise the owners and occupiers may with the greatest ease evade the provisions of this Act. We have safeguarded an incoming proprietor or tenant by inserting a provision to the effect that the Commissioner of Police shall keep a list of all houses, rooms or places in respect of which an order has been made under this clause for the discontinuance of the use of such houses, rooms or places as brothels or for any of the other purposes specified in the clause. We have therefore deleted the original sub-clause (7) and amalgamated it with sub-clause (6). At the same time we have increased the time allowed under sub-clause (2) to enable the owner or lessor, or manager or occupier, on whom the order is served, to comply with the order.

The original *clauses 6, 7 and 8* deal with the rescue of girls from brothels and disorderly houses. We are unanimously in favour of making provision for such rescue by giving adequate powers of entry to the police in order that they may be able to search for girls who are placed in this position, but the proposal that the girl after her rescue may only be looked after until she attains the age of sixteen years does not commend itself to us. We consider

that if the rescue is to be effective and the girl trained to earn a respectable livelihood she must not be cast adrift so quickly and power must be taken to continue her training, if necessary, to the age of eighteen. We have, therefore, provided that while the procedure of the Bengal Children Act shall apply, the court shall have power to direct detention until the age of eighteen years and in clause 15 we have taken power to modify the provisions of the Bengal Children Act.

*Clause 7.*—We consider that a girl who has been removed from a brothel or disorderly house should be kept in a suitable place other than a police-station or jail not only until she is brought before a court but until the court decides to place her in proper custody or decides to dismiss the case. We have amended the clause accordingly.

The original *clause 8* is now contained in part in the revised *clause 15* which deals with the subsequent treatment of girls on the lines already indicated.

We have considered carefully the many suggestions that have been made for checking the evil of prostitution by taking steps against procurers All of us consider that this is an essential part of the scheme of the Bill and are strongly in favour of making the provisions against procurers and those who live on the earnings of prostitution as severe as is possible. Judicial corporal punishment has in other countries been found the most effective deterrent in the case of these degraded dregs of humanity and in the interests of their unfortunate victims we recommend that this punishment shall be authorised by law. While it is right to deprive the offender of his profits by the infliction of fines we consider that in no case should fine be the only penalty; the profits of the trade would prevent a fine by itself being deterrent.

*Clauses 9, 10, 11 and 12*—which we have inserted in the Bill are based on the Burma Act, but we have tried to make these clauses conform to the above principle and to stop possible loopholes which might be found to exist in the wording of the Burma Act.

*Clause 13.*—We consider that offences under clauses 9, 10, 11 and 12 should be triable only by a Presidency Magistrate or a Magistrate of the first class.

3. The Bill was published in English in the *Calcutta Gazette* of the 14th February, 1923

4. We do not consider that the Bill has been so altered as to require republication.

5. We recommend that the Bill, as amended by us, be passed.

H. L STEPHENSON,

*Member in charge.*

L. BIRLEY.
S. N. MULLIK.
JATINDRA NATH MOITRA.
JATINDRA NATH BASU.
H. P. DUVAL.
S. C. MUKHARJI.
*K. C. ROY CHAUDHURI.
A RAHEEM.
*F. E E. VILLIERS.

C. TINDALL,

*Secretary to the Govt. of Bengal and*
*Secretary to the Bengal Legislative Council.*

CALCUTTA;
*The 16th July, 1923.*

* Signed subject to a minute of dissent which will be sent in and published later.

NOTE.—Dr. Hassan Suhrawardy was prevented by illness from attending the meetings of the Select Committee.

# THE CALCUTTA SUPPRESSION OF IMMORAL TRAFFIC BILL, 1923;

*(as amended by the Select Committee)*

[NOTE.—*All changes made by the Select Committee have, so far as possible, been underlined.*]

A

# BILL

*for the suppression of Immoral Traffic in the town and suburbs of Calcutta and in the Port of Calcutta.*

WHEREAS it is expedient to make better provision for the suppression of brothels, of the traffic in women and girls and of the practice of solicitation and for other purposes of a like nature in the town and suburbs of Calcutta and in the Port of Calcutta;

AND WHEREAS the previous sanction of the Governor General has been obtained under sub-section (3) of section 80A of the Government of India Act to the passing of this Act; 5 & 6 Geo 5, C 61, 6 & 7 Geo 5, C 37, 9 & 10 Geo 5, C 101

It is hereby enacted as follows:—

Short title, commencement and extent

**1.** (1) This Act may be called the Calcutta Suppression of Immoral Traffic Act, 1923

(2) It shall come into force on such date as the Local Government may, by notification in the *Calcutta Gazette*, direct.

(3) It extends to Calcutta as defined in section 2.

Definitions

**2.** In this Act, unless there is anything repugnant in the subject or context,—

(1) "brothel" means any house, room or place which the occupier or person in charge thereof habitually allows to be used by any other person for the purposes of prostitution; [*Cf* Bur Act II of 1921, s 2]

(1a) "Calcutta" means the town of Calcutta as defined in section 3 of the Calcutta Police Act, 1866, the suburbs of Calcutta as defined by notification under section 1 of the Calcutta Suburban Police Act, 1866, and the Port of Calcutta as defined by notification under section 5 of the Indian Ports Act, 1908; Ben Act IV of 1866 Ben. Act II of 1866 XV of 1908.

(2) "Commissioner of Police" means the Commissioner of Police for the town and suburbs of Calcutta;

(3) the words "public place" and "street" have the meanings assigned to them by section 3 of the Calcutta Police Act, 1866;

(4) "prescribed" means prescribed by rules made under section 16. Ben. Act IV of 1866

**3.** (*Reproduced as clause 14.*)

(*Clauses 4, 5.*)

Penalty for solicitation

**4.** (*1*) Whoever, in any street or public place or within sight of, and in such manner as to be seen from any street or public place, endeavours to attract attention for the purpose of prostitution, or for such purpose solicits or abets the solicitation of any person, shall be punished with fine which may extend to one hundred rupees, or with imprisonment for a term which may extend to one month, or with both, and if such person is again convicted after three previous convictions for the same offence, he shall be punished with imprisonment for a term which may extend to six months. [*Cf* Bur Act II of 1921, s 4]

(*2*) Any police officer not below the rank of Sub-Inspector of Police or Sergeant, specially empowered by name in this behalf by the Commissioner of Police, may arrest without a warrant for any offence specified in sub-section (*1*). [*Cf* Ben. Act IV of 1866, s 72A]

Power to order discontinuance of house, etc, as brothel, etc

**5.** (*1*) When the Commissioner of Police receives information that any house, room or place— [*Cf* Ben Act IV of 1866, s 43]

(*a*) is being used as a brothel or disorderly house, or for the purpose of carrying on the business of a common prostitute, in the vicinity of any educational institution or of any boarding house, hostel or mess used or occupied by students, or of any place of public worship or recreation, or

(*b*) is used as, or for the purpose, aforesaid to the annoyance of respectable inhabitants of the vicinity, or

(*c*) is used as, or for the purpose, aforesaid on any main thoroughfare which has been notified in this behalf by the Local Government on the recommendation of the Corporation of Calcutta, or

(*d*) is used as a common place of assignation,

he may cause a notice to be served on the owner, lessor, manager or occupier of the house, room or place to appear before him, either in person or by agent, on a date to be fixed in such notice, and to show cause why, on the grounds to be stated in the notice, an order should not be made for the discontinuance of such use of such house, room or place.

(*2*) If, on the date fixed, or on any subsequent date to which the hearing may be adjourned, the Commissioner of Police is satisfied, after making such inquiry as he deems fit, that the house, room or place is used as described in clause (*a*), (*b*), (*c*) or (*d*) of sub-section (*1*), as the case may be, he may direct, by order in writing on such owner, lessor, manager or occupier, that the use as so described of the house, room or place be discontinued from a date not less than fifteen days from the date of the said order and be not thereafter resumed.

(*3*) (*Omitted.*)

(*4*) No house, room or place, concerning which an order has been made under sub-section (*2*), shall

(*Clause 6.*)

again be used, or be allowed to be used, in any manner described in clause (*a*), (*b*), (*c*) or (*d*) of sub-section (*1*), as the case may be, and the Commissioner of Police, if he is satisfied, with or without further inquiry, that such house, room or place is again used in such manner, may, by order in writing on the owner, lessor, manager or occupier of such house, room or place, direct that the use as so described of such house, room or place be discontinued within a period of seven days and be not thereafter resumed.

(*5*) For the purposes of this Act the decision of the Commissioner of Police that a house, room or place is used in any manner, or for any purpose, described in clause (*a*), (*b*), (*c*) or (*d*) of sub-section (*1*) shall be final, and the legality or propriety thereof shall not be questioned in any trial or judicial proceeding in any Court

(*6*) Whoever, after an order has been made by the Commissioner of Police under sub-section (*2*) or sub-section (*1*) in respect of any house, room or place, uses, or allows to be used, such house, room or place in a manner which contravenes such order after the period stated therein, shall be punished with fine which may extend to fifty rupees for every day after the expiration of the said period during which the breach continues, and shall, on a second conviction for the same offence, be punished with imprisonment for a term which may extend to six months in addition to, or in lieu of, any fine imposed. [*Cf* Bom Act V of 1866, s 43A]

(*7*) (*Omitted.*)

(*7a*) For the purpose of an inquiry under this section the Commissioner of Police may depute a Deputy Commissioner of Police to make a local investigation, and may take into consideration his report thereon.

(*7b*) The Commissioner of Police shall maintain a register in which shall be entered a description of all houses, rooms and places in respect of which an order has been made under this section. Such register shall be open to inspection by the public on payment of the prescribed fee.

(*8*) Notwithstanding anything contained in any other law for the time being in force, the owner or lessor of any house, room or place, in respect of which an order has been made on the lessee, tenant or occupier thereof directing the discontinuance of the use thereof as a brothel or disorderly house or for the purpose of carrying on the business of a common prostitute, or as a common place of assignation, shall be entitled forthwith to determine such lease, tenancy or occupation.

Removal and disposal of minor girls found in brothels, etc.

**6.** (*1*) The Commissioner of Police, or a Deputy Commissioner of Police, or a police-officer not below the rank of Inspector, specially authorised in writing in this behalf by the Commissioner or a Deputy Commissioner of Police, shall be empowered to enter

(*Clauses 7-9.*)

into any brothel or disorderly house or house of assignation, in which he has knowledge or suspicion, or it is reported to him that a girl, apparently under the age of sixteen years, is living or is carrying on, or is being made to carry on, the business of a prostitute, and shall be entitled to remove such girl forthwith from such brothel, disorderly house or house of assignation.

(*2*) (*Omitted.*)

(*3*) (*Omitted.*)

(*4*) (*Omitted.*)

(*2a*) A girl who has been so removed shall be brought before a Juvenile Court constituted under section 37 of the Bengal Children Act, 1922, and the Court shall cause an inquiry to be made in the manner provided in sub-section (*3*) of section 27 of that Act and, if satisfied that the girl is under sixteen years of age and that she should be dealt with as hereinafter provided, may make an order that such girl be placed in suitable custody in the prescribed manner until she attains the age of eighteen years or for any shorter period. Ben Act II of 1922

(*5*) For the determination whether a girl produced before a Court under the provisions of this section is under sixteen years of age, the provisions of section 38 of the Bengal Children Act, 1922, shall apply.

Intermediate custody of girl removed from brothels, etc

**7.** When a girl has been removed from a brothel or disorderly house or house of assignation under the provisions of sub-section (*1*) of section 6, the Commissioner or Deputy Commissioner of Police or other police officer carrying out the removal shall, until such girl can be brought before the Court, and until the Court makes an order under sub-section (*2a*) of section 6 or otherwise disposes of the case, cause her to be detained in such place (other than a police-station or jail) as may be prescribed in this behalf by the Local Government.

**8.** (*Omitted.*)

Punishment for living on the earnings of prostitution

**9.** (*1*) Any male person who knowingly lives, wholly or in part, on the earnings of prostitution shall be punished with imprisonment which may extend to three years, or with whipping, or with both of these punishments and shall also be liable to a fine which may extend to one thousand rupees. [*Cf* Bur Act II of 1921, s 7]

(*2*) Where a male person is proved to be living with, or to be habitually in the company of, a prostitute, or is proved to have exercised control, direction or influence over the movements of a prostitute in such a manner as to show that he is aiding, abetting or compelling her prostitution with any other person

(*Clauses 10-15.*)

or generally, it shall be presumed, until the contrary is proved, that he is knowingly living on the earnings of prostitution.

Procuration

**10.** Any person who induces a woman or girl to go from any place with intent that she may, for the purposes of prostitution, become the inmate of, or frequent, a brothel, shall be punished with imprisonment which may extend to three years, or (if a male) with whipping or (if a male) with both of these punishments, and shall also be liable to fine which may extend to one thousand rupees. [*Cf* Bur. Act II of 1921, s 8]

Punishment for importing woman or girl for prostitution

**11.** Any person who brings or attempts to bring, or causes to be brought, into Calcutta any woman or girl with a view to her carrying on, or being brought up to carry on, the business of a prostitute, shall be punished with imprisonment which may extend to three years, or (if a male) with whipping, or (if a male) with both of these punishments and shall also be liable to fine which may extend to one thousand rupees. [*Cf* Bur. Act II of 1921 s 9]

Detention as prostitute or in brothels, etc

**12.** Any person who detains any woman or girl against her will— [*Cf* Bur Act II of 1921, s 10]

(*a*) in any house, room or place in which the business of a prostitute is carried on, or

(*b*) in or upon any premises with intent that she may have sexual intercourse with any man other than her lawful husband,

shall be punished with imprisonment which may extend to three years, or with fine which may extend to one thousand rupees or with both.

Offences triable by Presidency Magistrates or First Class Magistrates

**13.** No Magistrate other than a Presidency Magistrate or a Magistrate of the first class shall try offences punishable under sections 9, 10, 11 and 12 [*Cf* Bur Act II of 1921 s 18]

Repeals

**14.** Sections 43, 43A, 43B, 68B and 72A of the Calcutta Police Act, 1866, and sections 17, 17A, 17B, 41A and 13A of the Calcutta Suburban Police Act, 1866, are hereby repealed. [Bill, clause 3] Ben Act IV of 1866 Ben Act II of 1866

Subsequent treatment of girl committed to suitable custody under sub-section (*2a*) of section 6

**15.** When an order that a girl be placed in suitable custody has been passed under sub-section (*2a*) of section 6, the provisions of the Bengal Children Act, 1922, shall, subject to such modifications as the Local Government may prescribe by rules made under section 16 and notwithstanding her age, thereafter apply to the case of such girl during the period of the said order, as if she had been a child or young person dealt with under section 28 of that Act. Ben Act II of 1922

(*Clause 16.*)

Rules

**16.** The Local Government may make rules—

(*a*) prescribing the fee to be paid for inspection of the register maintained under sub-section (*7b*) of section 5;

(*b*) for the care, treatment, instruction and maintenance of girls placed in suitable custody under sub-section (*2a*) of section 6; and

(*c*) prescribing the places in which girls may be detained under the provisions of section 7.

C. TINDALL,

*Secretary to the Government of Bengal and*
*Secretary to the Bengal Legislative Council.*

## GOVERNMENT OF BENGAL.

### LEGISLATIVE DEPARTMENT.

NOTIFICATION.

*No. 1345L., dated Calcutta, the 23rd July, 1923.*—The following Report of the Select Committee on the Bengal Tenancy (Utbandi Amendment) Bill, 1923 (with the Bill, as amended by the Committee), is hereby published for general information :—

# REPORT OF THE SELECT COMMITTEE ON THE BENGAL TENANCY (UTBANDI AMENDMENT) BILL, 1923.

We, the undersigned members of the Select Committee, to which the Bill to supplement and amend the Bengal Tenancy Act, 1885, in order to provide means whereby a uniform annual money rent may be fixed for lands held under the custom of *utbandi* and to make further provision in respect of such lands was referred, have considered the Bill, and the papers noted at the end of this paragraph and have the honour to submit this, our report, with the Bill, as amended by us annexed hereto In reprinting the Bill, all changes made by us have, so far as possible, been underlined

*Paper No. 1*

1. Translation of petitions from the inhabitants of various villages in the district of Nadia

2 Petition from Babu Nityahari Bhattacharji and other members of the Raiyat Association of Belpukur and 15 other villages.

3. Letter No. 1486, dated the 28th March, 1923, from the District Judge of Murshidabad.

4. Letter, dated the 28th March, 1923, from Mr. M M. Crawford.

5. Letter No. 225 G-XVII—I, dated the 28th March, 1923, from the District Judge of Pabna and Bogra

6. Letter No. 646 G., dated the 28th March, 1923, from the District and Sessions Judge, Rajshahi.

7. Resolutions, dated the 28th March, 1923, by the Bekoaile Raiyat Samity

8. Letter, dated the 29th March, 1923, from Babu Jatindra Nath Ghose, M A, B L

9. Memorandum No. 7, dated the 30th March, 1923, by the Nadia Landholders Association.

10. Letter No. 70, dated the 30th March, 1923, from the Murshidabad Association.

11. Letter, dated the 30th March, 1923, from Maulvi M. Azizul Haque, B L

12. Letter No E-O-17-21623, dated the 30th March, 1923, from Raja Bhupendra Narayan Sinha Bahadur of Nashipur

13. Letter, dated the 31st March, 1923, from Maulvi Ekramul Haq, M L.C.

14. Letter No. 1076 R., dated the 1st April, 1923, from the Commissioner of Rajshahi Division.

15. Letter No. 2068, dated the 2nd April, 1923, from Raja Ban Behari Kapur Bahadur, C S.I.

16. Letter No. S.—963, dated the 3rd April, 1923, from the District Judge of Jessore.

17. Letter No. 1047, dated the 3rd April, 1923, from the District Judge of Nadia.

18. Letter No. K. H. 57, dated the 5th April 1923, from Raja Pramatha Bhusan Deva Ray Bahadur of Naldanga.

19. Letter No. XLIV-14-2864, dated the 6th April, 1923, from the Director of Land Records, Bengal.

20. Letter, dated the 9th April, 1923, from the Hon'ble Sir Manindra Chandra Nandy, K.C.I.E.

21. Letter No. 4 R.L., dated the 16th April, 1923, from the Commissioner of the Presidency Division.

22. Letter No. 275, dated the [illegible] April, 1923, from the British Indian Associati[illegible]

2. The more important changes are as follows :—

1. *Long title and Preamble.*—We have taken into consideration the fact that difficulties have arisen in the interpretation of the words 'held under the custom of *utbandi*' and we consider that the wording should be made explicit so as to cover all *utbandi* lands without question. We have made an amendment to give effect to this recommendation.

*Clause 2 (i) Proposed section 180A, sub-section (1).*—We have considered very carefully the opinions on the draft Bill as circulated by the Government and we think that the objections to the new section 180 B and to 180A (2)(b) will best be met by restricting the power of making applications for fixing a uniform annual money rent to persons who are, or who but for the operation of section 180 in respect of lands held under the custom of *utbandi* would have been, settled raiyats of the village This restriction will ensure that casual tenants will not be able to avail themselves of the provisions of the Bill. We have accordingly suggested an amendment to this sub-section. An amendment consequential on the recommendation recorded in paragraph 1 has also been made in this sub-section and throughout the remaining portions of the Bill

(*ii*) *Proposed section 180A, sub-section (2).*—The words "in the same village" have been inserted in clauses (*a*) and (*b*) so as to make the intention clear, and a provision has been made that in the case of lands in which the raiyat has not acquired a right of occupancy the application shall include not only the lands which he himself has held during the past six years but also those lands which have been cultivated during that period by persons whose heir he is and who have died.

(*iii*) *Proposed section 180A, new sub-section (2a).*—We consider that, with a view to simplify the procedure and to diminish the cost of proceedings, the landlord should be able to put in a single application for conversion in respect of all the lands held in *utbandi* by tenants under him in the same village, while one or more tenants should be able to put in a single application for conversion in respect of the lands held in *utbandi* by them under the same landlord and in the same village.

(*iv*) *Proposed section 180A, sub-section (5).*—We consider that steps should be taken to protect permanent superior landlords under whom there are temporary tenure-holders or *ijaradars*, who might make use of the provisions of the Act to the prejudice of the permanent superior landlords by the taking of premium on conversion. We consider that the best way of protecting permanent superior landlords in this matter is to make it obligatory on the officer who receives the application to send notice in cases where the immediate landlord of the raiyat has a mere temporary interest to the superior landlord in order that the latter may contest the application before the determining officer or come to an amicable private arrangement with the immediate landlord of the raiyat in regard to the apportionment of the premium.

(*v*) *Proposed section 180A, sub-sections (6) and (7).*—Consequential and drafting alterations have been made in these sub-sections. While considering proposed sub-section (7) we discussed the question as to whether a premium should be taken in every case of conversion of *utbandi* lands in which the raiyat has not acquired an occupancy right. We consider that the taking of a premium in all such cases is justified. It represents a payment for new rights conferred.

(*vi*) *Proposed section 180A, sub-section* (*8*).—We consider that the basis of the calculation of the sum to be determined as uniform annual money rent should be the average of the amount that was actually paid or payable as rent for the land during the previous six years and that this average rent should not be made merely a factor of equal weight with others for the guidance of the determining officer. We have, therefore, agreed to delete clause (*b*) of this proposed sub section and have amended the main sub-section to the above effect. As to the subsidiary points which the determining officer should take into consideration in dealing with special cases, objections were put forward by various sides in regard to clause (*a*) and clause (*c*) of this sub-section, but these were withdrawn on compromise, as the various clauses go to balance one another. Drafting amendments have also been made in clause (*d*).

In our opinion the charges incurred by the landlord on account of drainage should also be considered and we have amended clause (*e*) accordingly and have also simplified the drafting of this clause.

(*vii*) *Proposed section 180A, sub-section* (*9*).—In connection with this proposed sub-section the question as to whether there should be a fixed rate of premium or a varying rate of premium was discussed. A varying rate might meet local conditions and cases where rents are unduly high or unduly low. We, however, on consideration of all the factors in the case have recommended the retention of the proposal in the Bill that there should be a fixed rate of premium in all cases. It is of special importance that the landlord or the tenant, as the case may be, should have a fairly clear idea of what he is asking for or what he is faced with at the time when he makes the application for conversion or receives notice of such application. Where both parties know mathematically what their rights are in the absence of special circumstances, an amicable settlement is far more likely than where there is inevitably a point to be decided by a third party. We have retained the proposal in the Bill that the amount of the premium should be three years' rent.

We consider that the proviso to this sub-section should be deleted. It is better for both the landlord and the tenant that a premium should be paid in regard to the lands in which the tenant has not acquired occupancy rights than that the tenant and his successors should be saddled with an increase of rent in lieu of payment of premium.

(*viii*) *Proposed section 180A, sub-section* (*10*).—The question of costs was considered in connection with this sub-section, but we consider that it is desirable that the parties should bear their own costs. This will be the case in the absence of a definite provision in the Bill to the contrary. This sub-section has, therefore, been left unaltered.

(*ix*) *Proposed section 180A, sub-section* (*11*).—We agree to the system of payment of the premium by instalments and consider that the principle of payment by not more than three instalments, as suggested in the Bill, is suitable.

(*x*) We have adopted the remaining sub-sections of the proposed section 180A, and also the proposed section 180B with minor drafting modifications. We consider that the objections in the opinions received to this proposed section are met satisfactorily by the restriction of the operation of the Bill to lands held by settled raiyats or by persons who would have been settled raiyats but for the operation of the *utbandi* provisions of the Tenancy Act.

3. In our deliberations we have throughout kept in view the need for maintaining the general working scheme of the Bill as a basis of compromise and this has necessarily involved give and take on either side in regard to matters of detail in the interest of the success of the measure as a whole.

4. The Bill was published in English in the *Calcutta Gazette* of the 27th June, 1923.

5. We do not consider that the Bill has been so altered as to require republication.

6. We recommend that the Bill, as amended by us, be passed.

BIJAY CHAND MAHTAB
(MAHARAJADHIRAJA BAHADUR OF BURDWAN),
*Member in charge.*

P. C. MITTER *
H. P. DUVAL
M. C. McALPIN
MAHENDRA NATH GUPTA
KSHAUNISH CHANDRA ROY.†
SYED ERFAN ALI †
EKRAMUL HUQ.*
RESHEE CASE LAW.*
BHISHMADEV DAS

C. TINDALL,
*Secretary to the Government of Bengal and Secretary to the Bengal Legislative Council.*

CALCUTTA,
*The 14th July, 1923.*

NOTE—* Signed subject to the note of dissent annexed
† Signed subject to note of dissent, if any

## Note of Dissent by the Hon'ble Mr. P. C. Mitter.

I sign this report subject to one suggestion. In my opinion multiplicity of legal proceedings should be avoided. I say this as much in the interest of the landlord as of the tenant and if I may say so, more in the interest of the tenant than of the landlord because the tenant has usually a smaller purse. The proposal in the Bill will mean a fresh suit on payment of court fees.

The proposal in sub-section (*12*) of the proposed new section 180A involves a fresh suit for the recovery of the *salami*. This means that the plaintiff will have to pay court fees which will be ultimately recoverable from the tenant. This will also mean that both parties will have to incur costs of litigation. Litigation necessarily results in harassment to both the parties I would therefore suggest that the premium or the instalment may be recovered by the landlord making a requisition to the Collector for the recovery of the arrear of the same in the manner set forth in sub-sections (*3*) and (*4*) of section 158A, and the provisions of sub-sections (*5*) to (*9*) of that section shall apply to the recovery of the said arrear by the Collector as if it were an arrear of rent recoverable by him under the provisions of that section. In my view, if my suggestion be accepted both the landlord and the tenant will be benefited.

## Note of Dissent by Maulvi Ekramul Huq, B.L., M.L.C.

I do not agree to the payment of any premium by the *utbandi* tenant for which provision is made in section 180A, sub-sections (7) and (9). But for section 180 of the Bengal Tenancy Act such tenants would have got the right of occupancy long ago. The amended Act does not confer any right whatsoever but simply tries in a feeble manner to undo a wrong done so long.

**Note of Dissent by Raja Reshee Case Law, C.I.E., M.L.C.**

I sign subject to the reservation that the premium should be paid in one instalment and not three, as otherwise it will involve the landlord to unnecessary litigation for its recovery.

# THE BENGAL TENANCY (UTBANDI AMENDMENT) BILL, 1923;

*(as amended by the Select Committee)*

## BILL

*to supplement and amend the Bengal Tenancy Act, 1885, in order to provide means whereby a uniform annual money rent may be determined for utbandi lands and to make further provision in respect of such lands*

Preamble.

WHEREAS it is expedient to supplement and amend the Bengal Tenancy Act, 1885, in order to provide means whereby a uniform annual money-rent may be determined for land held under the custom of *utbandi* or under any form of tenancy locally known as *utbandi*, and to make such other provisions as hereinafter appear in respect of lands for which a uniform annual money rent has been so determined; VIII of 1885

And whereas the previous sanction of the Governor General under sub-section (*3*) of section 80A of the Government of India Act has been obtained to the passing of this Act; 5 & 6 Geo V, c 61, 6 & 7 Geo V, c 37, 9 & 10 Geo V, c 101

It is hereby enacted as follows:—

Short title and extent

**1.** (*1*) This Act may be called the Bengal Tenancy (Utbandi Amendment) Act, 1923.

(*2*) It extends to the whole of Bengal.

Insertion of new sections 180A and 180B in Act VIII of 1885

**2.** After section 180 of the Bengal Tenancy Act, 1885, the following sections shall be inserted, namely:—

"180A. (*1*) Notwithstanding anything contained in section 180, when a raiyat who is or who but for the operation of section 180 in respect of land held under the custom of *utbandi* would have been, a settled raiyat of the village, holds or has held under the custom of *utbandi*, or under any form of tenancy locally known as *utbandi* land, (hereinafter referred to as *utbandi* land), either the landlord or the raiyat may apply to have a uniform annual money rent determined for the land.

Fixing of uniform annual money rent in respect of *utbandi* lands

(*2*) The application shall include at the discretion of the applicant either—

(*a*) all utbandi lands held in the same village by the same raiyat under the same landlord in which the raiyat has acquired a right of occupancy whether under the provisions of section 180 or otherwise, or

(*Clause 2.*)

(*b*) all the lands held in the same village under the same landlord by the raiyat which the [illegible] or any [illegible] person whose heir he is, has cultivated as *utbandi* land at any time during the preceding period of six years if he or the said deceased person is the last person to have cultivated the land and has or had not acquired occupancy rights therein, or

(*c*) both.

(*2a*) Subject to the provisions of sub-section (*2*), a single application may be made by a landlord in respect of lands held as *utbandi* lands in the same village by one or more raiyats under him and a joint application may be made by two or more raiyats in respect of lands held by them as *utbandi* lands in the same village under the same landlord.

(*3*) The application may be made to the Collector or to a Subdivisional Officer or to a Revenue Officer appointed by the Local Government under the designation of Settlement Officer or Assistant Settlement Officer for the purpose of making a survey and record-of-rights under Chapter X or to any other officer specially authorised by the Local Government.

(*4*) The case may be determined by the officer who receives the application, or the Collector or the Settlement Officer may transfer it for disposal to some other officer competent under sub-section (*3*) to receive applications

(*5*) The officer receiving the application or the officer to whom the case is transferred, as the case may be, shall cause notice to be given in the prescribed manner to the opposite party, and shall fix a date for the determination of the case.

If the immediate landlord of the raiyat is a temporary tenure-holder or *ijaradar* the officer receiving the application shall also give notice to the superior landlord in the lowest degree, who is a proprietor or permanent tenure-holder.

(*6*) If the application is made in respect of lands in which the raiyat has not acquired occupancy rights, the officer may reject it in whole or in part in respect of such lands, if he is satisfied in view of all the circumstances of the case that it is unreasonable to grant it:

Provided that a refusal shall be no bar to proceedings being again taken under this section after five years from the date of refusal if in the opinion of the officer who then received the application the circumstances have in the meantime changed.

(*Clause 2.*)

(7) If the application is not wholly rejected, the officer shall then determine the sum to be paid as a uniform annual money rent, and also [illegible] raiyat has not acquired occupancy rights, a premium to be paid to the landlord, and he shall order that the raiyat shall, in lieu of paying the rent for the land as *utbandi* land, pay the sum so determined and the premium, if any.

(8) In making the determination of the sum to be paid as rent, the officer shall calculate the average of the amount that was actually paid or payable as rent for the land during the previous six years and shall ordinarily declare the same as the sum to be paid as rent:

Provided that the officer may also take into conderation—

(*a*) the average money rent payable by occupancy raiyats for land of a similar description and with similar advantages in the vicinity;

(*b*) [*Omitted.*]

(*c*) the average rates for lands of a similar description and with similar advantages in the vicinity held as *utbandi* lands;

(*d*) the average money rent payable for lands of a similar description and with similar advantages in the vicinity by raiyats who formerly paid their rent for those lands as *utbandi* lands but whose rents have been converted into uniform annual money rents whether under this section or by agreement or otherwise;

(*e*) the charges incurred in accordance with custom by the landlord in respect of the irrigation and drainage of the utbandi lands and the arrangements made for continuing those charges;

(*f*) the rules laid down in this Act for the guidance of the Civil Courts in enhancing or reducing rents on account of the holdings of occupancy raiyats;

(*g*) any sum agreed to by the parties to be paid as money rent:

Provided that the officer shall in no case determine a rent which is unfair or inequitable.

(*Clause 2.*)

(*9*) The premium to be paid to the landlord in the case of lands in which the raiyat has not acquired occupancy [redacted] three times the rent, if the application is made under clause (*c*) of sub-section (*2*), three times the portion of the rent determined under sub-section (*7*) on account of such lands.

(*Proviso omitted.*)

(*10*) The order shall be in writing, shall state the grounds on which it is made, and shall, in the absence of any special reasons to the contrary recorded in writing, take effect from the beginning of the agricultural year next after the date on which it is made.

(*11*) The officer may, on the application of the raiyat, order that the premium shall be paid by instalments not exceeding three in number, that the first instalment shall be paid at the beginning of the agricultural year in which the rent settled under sub-section (*7*) takes effect and that one of the remaining instalments shall be paid at the beginning of each of the succeeding agricultural years until the premium is paid in full.

(*12*) The premium or the instalments thereof shall be payable and recoverable as rent, but interest shall only be awarded in respect of such instalments as are not paid by the date fixed under sub-section (*11*).

(*13*) The order shall be subject to appeal in the manner provided in section 109A, unless the application has been made in the course of proceedings under Part II of Chapter X, in which case the provisions of sections 104G and 104H shall apply.

(*14*) Notwithstanding anything contained elsewhere in this Act or in any other law, no suit shall be brought or application made in any court in respect of any order passed under this section, save as is provided in this section.

Lands in respect of which a uniform annual money rent has been fixed under section 180A to cease to be *utbandi* lands

180B. Whenever an order under section 180A is passed determining a uniform annual money rent for any lands, such lands shall cease to be held as *utbandi* lands with effect from the date from which the new rent takes effect, and the tenant shall hold them as an occupancy raiyat from the date of the order."

C. TINDALL,

*Secretary to the Government of Bengal and Secretary to the Bengal Legislative Council.*

## GOVERNMENT OF BENGAL.

[redacted]

NOTIFICATION.

*No. 1846L., dated Calcutta, the 23rd July, 1923.*—The following Report of the Select Committee on the St. Thomas' School Bill, 1923, (with the Bill, as amended by the Committee), is hereby published for general information.

## REPORT OF THE SELECT COMMITTEE ON THE ST. THOMAS SCHOOL BILL, 1923.

We, the undersigned members of the Select Committee, to which the Bill to provide for the management and future location of St. Thomas' School in Calcutta and for the making over of St. Thomas' Church in Calcutta to certain ecclesiastical authorities was referred, have considered the Bill and have the honour to submit this our Report with the Bill, as amended by us, annexed hereto. In reprinting the Bill all changes made by us have, so far as possible, been underlined.

2. We have made some changes in the Title and Preamble to bring the wording into line with the actual facts.

We consider that membership of the Governing Body of St. Thomas' School should be widened and have amended clause 2 accordingly.

In so doing we have transferred from original sub-clause (*d*) to separate sub-clauses, the references to the representative of the Bengal Chamber of Commerce and the representative of the Anglo-Indian and Domiciled European Association of Bengal, so as to make it possible for those bodies to nominate either a member of the Church of England or a member of some other denomination.

We have also added to the body of Governors a European or Anglo-Indian Commissioner of the Corporation. We have also given the Governors a free choice in regard to the persons who shall be co-opted under sub-clause (*2*).

*Clauses 11 and 12.*—We have considered these clauses in conjunction with clause 2 and consider that they should stand as drafted. In Bengal, whatever the denomination of a school may be, there is under the rules for grants-in-aid to European schools no restriction on religious teaching in that school being imparted to all boarders according to the principles of a particular denomination, while in the case of day-boys a conscience clause is an obligatory condition of a grant-in-aid from the Government. The application of those rules is specially safeguarded by clause 12, and this will ensure that the St. Thomas' School is conducted in this matter on the same general principle as governs the conduct of other European schools in Bengal.

*Clause 13.*—We have considered very carefully the question of the amount of land that should be made over by the Governors to St. Thomas' Church, and we are of opinion that the area which it is proposed to make over is suitable. A new proposal has been made to increase that area by nine cottahs, but in our opinion this is not justified in view of the financial difficulties of the school.

We consider that the total area of two bighas, as set out in this clause will be sufficient to provide a suitable compound for the Church and, as the Free School site may be disposed of in one or more lots, and as the general lay-out may differ according to the manner of disposal, it is difficult at the present moment to fix the exact boundaries of the land that will be given to the Church. We have, therefore, confined our specification of that land to a

declaration as to the total area of the Church and its compound, and we have provided that the Local Government shall approve the actual delineation before the making over of the compound land to the ecclesiastical authorities takes place.

[redacted] made a drafting amendment so as to make it clear that more than one provident fund can, if necessary, be established for the teachers, officers and servants of the school

We have amended the First Schedule so as to exclude from it merely the land on which the actual building of St. Thomas' Church stands.

We have also omitted the Third Schedule These changes are consequential on the amendments made in clause 13.

3. The Bill was published in English in the *Calcutta Gazette* of the 27th June, 1923.

4. We do not consider that the Bill has been so altered as to require re-publication.

5. We recommend that the Bill, as amended by us, be passed

B. C. MAHTAB,
*Member in charge.*

H. P. DUVAL.
W. W. HORNELL.
S. R. DAS.
SURENDRA NATH MALLIK
F. E E VILLIERS.
H. BARTON.
W L CAREY.

C TINDALL,
*Secretary to the Government of Bengal and Secretary to the Bengal Legislative Council.*

CALCUTTA;
*The 18th July, 1923*

# THE ST. THOMAS' SCHOOL BILL, 1923;

*(as amended by the Select Committee).*

[NOTE.—All changes made by the Select Committee have, so far as possible, been underlined.]

A

# BILL

*to provide for the management and future location of St. Thomas' School and for the making over of certain land for the compound of St. Thomas' Church in Calcutta to certain ecclesiastical authorities.*

Preamble

WHEREAS it is expedient, in order to place the affairs of St. Thomas' School in Calcutta (hitherto known as the Calcutta Free School) on a legal and stable basis, to provide for the management and future location of the said school and for the making over of certain land for the compound of St. Thomas' Church in Calcutta to certain ecclesiastical authorities;

And whereas the previous sanction of the Governor General has been obtained under section 80A, sub-section (3), of the Government of India Act, to the passing of this Act; 5 & 6, Geo V, c 61, 6 & 7, Geo V, c 37, 9 & 10, Geo V, c 101.

It is hereby enacted as follows:—

## PRELIMINARY.

Short title and commencement

1. (1) This Act may be called the St. Thomas' School Act, 1923.

(2) This section and section 2 shall come into force at once, and the remainder of the provisions of this Act shall come into force on such date as the Local Government may, by notification in the *Calcutta Gazette*, direct.

## CONSTITUTION.

Constitution of the Governors

2. (1) The Governors of St. Thomas' School (hereinafter referred to as the Governors) shall be—

(a) the Lord Bishop of Calcutta;

(b) the Archdeacon of Calcutta;

(c) the Master of the Calcutta Trades Association for the time being;

(d) one person of either sex to be nominated by the Bengal Chamber of Commerce;

(e) one person of either sex to be nominated by the Anglo-Indian and Domiciled European Association of Bengal;

(f) one European or Anglo-Indian Commissioner of the Corporation of Calcutta to be nominated by the Corporation; and

*(Clauses 3—5.)*

(*g*) the following persons, of either sex, being members of the Church of England, namely :—

(*i*) [illegible] to be nominated by the Governor General of India;

(*ii*) two persons to be nominated by the Governor of Fort William in Bengal;

(*iii*) one person to be nominated by the vestry of St. Paul's Cathedral, Calcutta;

(*iv*) two persons to be nominated by the vestry of St John's Church, Calcutta, and

(*v*) one person to be nominated by the vestry of St. Stephen's Church, Kidderpore

(*2*) The Governors may at a meeting co-opt with themselves such persons, of either sex, not exceeding three in number, as they may consider necessary. Such persons shall be deemed to be Governors for the purposes of this Act.

(*3*) If any of the bodies referred to in clauses (*d*), (*e*) and (*f*) and sub-clauses (*iii*) to (*v*) of clause (*g*) of sub-section (*1*) does not by such date as may be prescribed by the Local Government nominate the Governors mentioned therein, the Local Government shall nominate qualified persons to be such Governors, who shall be deemed to be Governors duly nominated by such bodies.

(*4*) The names of the nominated and co-opted Governors shall be published in the *Calcutta Gazette*.

Incorporation of the Governors

**3.** The Governors shall be a body corporate by the name of the "Governors of St. Thomas' School" having perpetual succession and a common seal and in that name shall sue and be sued, and shall have power to acquire and hold property, to enter into contracts and to do all acts consistent with this Act, which may in their opinion be necessary for, or conducive to, the carrying out of the purposes of the school.

Period of office of Governors

**4.** The nominated and co-opted Governors shall, save as is herein otherwise provided, hold office for a period of three years from the date of the publication of their names in the *Calcutta Gazette*.

Provided that the said period of three years shall be held to include any period which may elapse between the expiration of the said three years and the date of the publication of names of new Governors in the *Calcutta Gazette*:

Provided also that the nominated and co-opted Governors shall be eligible for re-appointment.

**5.** (*1*) The quorum necessary for the transaction of business at meetings of the Governors shall be five.

(*2*) No act of the Governors shall be invalid merely by reason of any defect or invalidity in the appointment of any nominated or co-opted Governor or by reason of the number of Governors being less than that prescribed by section 2.

(*Clauses 6—9.*)

Power to appoint new Governors

**6.** If a nominated or co-opted Governor—

(*a*) dies, or

(*b*) is absent from the meetings of the Governors for more than six consecutive [illegible]

(*c*) desires to be discharged, or

(*d*) refuses to act or becomes incapable of acting, the authority which nominated or co-opted him may in cases (*b*) to (*d*) declare his post to be vacant and may in cases (*a*) to (*d*) nominate or co-opt, as the case may be, a new Governor to fill such vacancy for the unexpired remainder of the term for which such Governor would otherwise have continued in office.

MANAGEMENT AND PROPERTY OF ST. THOMAS' SCHOOL.

Change in the name of the school and vacation of office by existing Governors

**7.** From the date when this section comes into operation—

(*i*) the Calcutta Free School shall be known as St. Thomas' School, and

(*ii*) the term of office of all persons then acting as Governors of the school shall cease and the St. Thomas' School Society shall cease to have any connection with the management of the school.

Property to vest in the Governors

**8.** (*1*) All property, movable or immovable, which at the date when this section comes into operation appertains to the Calcutta Free School or is held by or on behalf of the persons then acting as Governors of the school or by the St. Thomas' School Society for the purposes of the school (including the premises specified in the First Schedule) shall, together with any property movable or immovable which may thereafter be given, bequeathed, transferred or acquired for the purposes mentioned in section 11, vest as and from such date in the Governors of St. Thomas' School as constituted by section 3 for the purposes of the school:

Provided that the Governors shall apply any funds which up to that date have been held in trust for specific purposes in connection with the school including the funds set forth in the Second Schedule, and any funds which may thereafter be so held, to the purposes for which they are held in trust.

(*2*) All liabilities which at the said date have been incurred by the persons then or theretofore acting as Governors or by the St. Thomas' School Society for the purposes of the school shall be deemed to be, and are hereby declared thereafter to be, liabilities of the Governors of St. Thomas' School as constituted by section 3.

Powers to Governors to remove school from present site and dispose of that site

**9.** The Governors are hereby authorised to carry out the removal of the school from the site in Free School Street where it is in part located, to such other site or sites as the Governors may, with the sanction of the Local Government, determine and the Governors are hereby empowered in that behalf to sell, lease, mortgage, or otherwise dispose of the present premises in Free School Street and the site thereof and to acquire by purchase or otherwise a suitable site or sites and to erect buildings for the purposes of the school as the Governors may, with the sanction of the Local Government, determine.

(*Clauses 10—14.*)

Power to Governors to delegate their powers and to appoint teach-

**10.** The Governors shall have power from time to time—

(*a*) to delegate, subject [illegible] as they think [illegible] any of their powers to sub-committees consisting of such Governors as they shall think fit;

(*b*) to appoint a Secretary and to fix his remuneration, if any; and

(*c*) to appoint such persons as they shall think fit to employ for the purposes of the school (including school-teachers, boarding-masters, matrons, sergeants, clerks, officers and servants) and to fix their remuneration

Purposes of St Thomas' School

**11.** The purposes of St. Thomas' School are hereby declared to be as follows and, save as is otherwise herein provided, all property vested in the Governors by or under this Act shall be deemed to be held in trust for the said purposes and not otherwise —

(*1*) the maintenance of an efficient school, and

(*2*) the provision of a sound education, with religious instruction in accordance with the principles of the Church of England, for the children of Europeans and Anglo-Indians

Provided that in the interpretation of the terms 'European' and 'Anglo-Indian' the Governors shall have due regard to any definition of those terms which may be included in the Code of Regulations for European Schools.

This Act not to preclude Governors from conforming to the regulations of the Local Government.

**12.** The Governors shall not be precluded by any provision in this Act from conforming to any regulations which the Local Government may impose as the conditions of a grant of money to the school.

MAKING OVER OF LAND FOR THE COMPOUND OF ST. THOMAS' CHURCH.

Compound of St Thomas' Church

**13.** (*1*) The Governors are further authorised in such manner as they deem fit to make over to, and to vest in, the Lord Bishop of Calcutta and the Archdeacon of Calcutta conjointly such land (the property of the Governors), adjacent to St Thomas' Church and not exceeding, when taken together with the land consecrated with the St Thomas' Church building, two bighas in all, as they may deem to be necessary for the convenient user of that Church for the purposes of the Church of England

(*2*) The boundaries of such land shall be delineated on the ground and approved by the Local Government before action is taken by the Governors under sub-section (*1*).

PROVIDENT FUND.

Power to Governors to establish a Provident Fund, or Funds

**14.** The Governors may, with the approval of the Local Government, establish a provident fund or provident funds for the benefit of their teachers, other officers or servants (appointed in accordance with the provisions of this Act) and may compel all or any of such teachers, officers and servants to contribute to, and may make supplementary contributions to, such provident fund or funds and make payments thereout in accordance with the rules of such fund.

(*Clause 15.*)

RULES.

Power to Governors to make rules

**15.** The Governors may from time to time make rules for [illegible] of the following purposes, namely :—

(*a*) for their own guidance and for the conduct of their business;

(*b*) to determine the persons by whom orders for payment of money, contracts, transfers and other documents may be signed on behalf of the Governors;

(*c*) for the management and control of the school in all its departments, including any hostel that may be established in connection with the school;

(*d*) regulating the proceedings of sub-committees,

(*e*) prescribing the rates and the conditions under which contributions may be paid by the Governors and their officers, teachers and servants to the provident fund or funds which may be established under section 14, and determining the conditions of payments from such fund or funds.

## THE FIRST SCHEDULE

(*See* section 8.)

(1) With the exception of the St. Thomas' Church building and the land consecrated therewith measuring one [illegible] feet by fifty-nine feet, the site with buildings thereon known as the Calcutta Free School, situated at 58, Free School Street, 28, Marquis Street, and 6, Marquis Lane, Calcutta, measuring about thirty-one bighas, and bounded as follows —

"On the north by pucca houses, a small Church known as St. Joseph's (Madrasi) Chapel and Market Street; on the south by a house and Marquis Street; on the east by a house and Collin Street (formerly called Collinga Bazar Street); and on the west by Free School Street."

(2) The leasehold of the land and buildings, known as Kidderpore House, situated on 4, Diamond Harbour Road, in Kidderpore in the district of the 24-Parganas, containing an area of twenty-one decimal nought four acres or thereabouts, and bounded as follows:—

"On the north by St. Stephen's Church compound and Government land of the Cattle Market, on the north-east corner by the Orphangunge Road, on the east by the premises of the Zoological Gardens and the Meteorological Observatory compound, on the south by the land of the lines of the Governor's Body Guard; and on the west by the compound of St Stephen's Parsonage and Diamond Harbour Road."

## THE SECOND SCHEDULE

(*See* section 8.)

LIST OF FUNDS

1. Provident Fund.
2. Retiring Allowance Fund
3. Apprentice Fund.
4. Thompson "Rex Ludorum" Fund
5. Samuel Benjamin Taylor Fund.

## THE THIRD SCHEDULE.

(*Omitted.*)

C. TINDALL,

*Secretary to the Government of Bengal and Secretary to the Bengal Legislative Council.*

**GOVERNMENT OF BENGAL.**

**LEGISLATIVE DEPARTMENT.**

**NOTIFICATION.**

*No. 1847 L., dated Calcutta, the 23rd July, 1923.*—The following Report of the Select Committee on the Calcutta Improvement (Amendment) Bill, 1923 (with the Bill as amended by the Committee) is hereby published for general information :—

## REPORT OF THE SELECT COMMITTEE ON THE CALCUTTA IMPROVEMENT (AMENDMENT) BILL, 1923.

We, the undersigned members of the Select Committee, to which the Bill further to amend the Calcutta Improvement Act, 1911, was referred, have considered the Bill and the Papers noted at the end of this paragraph, and have the honour to submit this, our report, with the Bill, as amended by us annexed hereto.

*Paper No. 1.*

Letter No 2697-J., dated the 3rd May, 1923, from the Secretary to the Government of Bengal, Judicial Department.

*Papers No. 2.*

(1) Letter No. OA-38—14-23, dated the 30th May, 1923, from the Accountant-General, Bengal

(2) Letter, dated the 30th May, 1923, from the Assistant General Secretary, European Association

(3) Letter, dated the 29th May, 1923, from the Secretary, Anglo-Indian and Domiciled European Association.

(4) Letter No. 12-L, dated the 1st June, 1923, from the Honorary Secretary, the Muhammadan Literary Society.

*Papers No 3*

(1) Letter, dated the 6th June, 1923, from the Secretary, Indian Association

(2) Letter No 8-C M.—7-1923, dated the 11th June, 1923, from the Secretary, Calcutta Trades Association

*Papers No. 4*

(1) Letter, dated the 13th June, 1923, from the Joint Secretary, Mahajan Sabha

(2) Letter No 742-O, dated the 14th June, 1923, from the Secretary, Indian Tea Association.

*Papers No. 5.*

(1) Letter No. 351-D., dated the 15th June, 1923, from the Secretary, Indian Jute Mills Association.

(2) Letter No. 117, dated the 18th June, 1923, from the Honorary Secretary, Marwari Association.

*Papers No. 6.*

(1) Letter No. XI-3, dated the 19th June, 1923, from the Chairman, Calcutta Improvement Trust.

(2) Letter No. 508—F-9, dated the 21st June, 1923, from the Honorary Secretary, Bengal National Chamber of Commerce.

*Paper No 7.*

Letter No. 1949—1923, dated the 28th June, 1923, from the Secretary, Bengal Chamber of Commerce.

*Paper No. 8.*

Letter No. 299, dated the 9th July, 1923, from the Secretary, British Indian Association.

2. On the Committee assembling, the Hon'ble the Member in charge informed the other members that the Corporation of Calcutta had asked for further time to consider the Bill. If this had been granted, it would have been impossible to place the Bill again before the present Council. Government had however considered very carefully the question as to whether the Bill [illegible] and confined to [illegible] controversial and urgent clauses. On the whole, he was of opinion that it was not desirable to pass the Bill in its original form through the Council during the August session Sufficient time was not available for the full consideration of certain controversial points which had been raised in various opinions, received in connection with the Bill. Moreover, the Corporation wished to propose changes in other sections of the Act, which were not touched by the Bill. He was prepared to give them time to mature their proposals with the object of legislating next year. He asked the Select Committee to recommend, therefore, that only those portions of the Bill which are of a really emergent nature be placed before the Legislative Council at the consideration stage. The two points which require immediate settlement are the amendment of the wording of section 54, the interpretation of which is in dispute between the Corporation and the Improvement Trust, and the raising of the rate of interest in sections 78 and 79 of the Act from four to six per cent.

On consideration of the position we have accepted the proposal of the Hon'ble the Member in charge that the Council be asked to proceed only with the abovementioned portions of the Bill

We have discussed the proposed amendment of section 54, and it has been announced by the Chairman of the Calcutta Corporation and the Chairman of the Improvement Trust that an equitable agreement has been come to in regard to the question of compensation for lands and buildings of the Corporation taken over by the Trust for the purposes of an improvement scheme. We are agreed that the details of the settlement of the dispute should be embodied in the Act and have made an amendment in section 54 accordingly. This amendment carries out the proposals made in the original Bill in sub-clause (*1*) of clause 15 and in sub-clause (*3*) of that clause, but it has also been agreed that the determining factor in regard to the question of payment of compensation by the Board to the Corporation in respect of lands taken over under section 54 should be the question whether the land taken over is going to be returned to the Corporation in accordance with the provisions of section 65 when the improvement scheme has been completed. If the land is so returned—in other words, forms an integral and permanent part of the scheme—the Corporation will be compensated for the temporary loss of it by its improved value on the completion of the improvement scheme. If it is not so returned, but is sold by the Trustees for recoupment purposes, compensation should be payable to the extent of the market value of the land as at the date of declaration made under section 6 of the Land Acquisition Act in respect of other lands scheduled for acquisition within the scheme Compensation should be payable in all cases for buildings belonging to the Corporation and taken over by the Board

We have also discussed the question of the amendment of sections 78 and 79 of the Act in regard to the rate of interest payable under those sections. The proposal to raise the rate to six per cent. appears in clause 21 of the Bill, that is to say, in clause (*ii*) of sub-section (*5*) of the proposed new section 78, and in sub-section (*8*) of the said section and also in the amendment to section 79 proposed in clause 22.

With one dissentient we consider that the raising of the rate of interest to six per cent. is justified, but we consider that in cases where the rate has already been fixed in accordance with the Act and where the agreement under the Act has already been executed, or is executed within two months after the coming into force of the increased rate, the old rate of four per cent. should be applied. A modified proposal to this effect is embodied in clause 3 of the revised Bill.

We recommend that the revised Bill as attached to this Report be taken into consideration and passed as amended by us, the Bill in its original form being not considered further. The amendments suggested in the clauses

dealt with are on matters of working and, as those clauses have already been laid before the public, we do not consider that the Bill has been so altered as to require republication.

3. The Bill was published in English in the *Calcutta Gazette* of the 21st March, 1923.

[redacted]

(*Member in charge*).

H P. DUVAL

S. W. GOODE.

T. EMERSON.

DEBI PROSAD KHAITAN.

D. J. COHEN.

S. N. MALLIK.

NITYA DHONE MUKHERJI.

D. C GHOSE

HARENDRA NATH CHAUDHURI.

S. MAHBOOB ALEY

H BARTON

AMULYA DHONE ADDY.*

W. L. CAREY.

C TINDALL,

*Secretary to the Government of Bengal and*
*Secretary to the Bengal Legislative Council.*

CALCUTTA;

*The 23rd July, 1923.*

* Signed subject to the note of dissent annexed.

**Note of Dissent by Babu Amulya Dhon Addy, M.L.C.**

The first proviso of clause 4 and clause 7 should be omitted on the following grounds :—

(1) When wards 19 to 25 of the Calcutta Municipality were added to the town of Calcutta, no concession was shown to the rate-payers of the said added area. The same consolidated rate has been levied on them since 1889 as that on the rate-payers of the town proper. I do therefore fail to understand as to why the total amount of rates on lands and buildings in Manicktala, Cossipore-Chitpur and Garden Reach should not be increased during the year 1924-25 and as to why the Corporation of Calcutta should be authorised to fix a lower rate on the annual valuation of the newly added area than that in the town of Calcutta during the years 1925-26 to 1928-29, specially as the annual valuation of holding in the newly added area is, in the opinion of the Assessor of the Calcutta Corporation, very low.

(2) At present, the owners and occupiers of small holdings in the newly added area are assessed more heavily than those of big holdings, for in Cossipore-Chitpur the latrine-fee on holdings up to an annual valuation of Rs. 100 (one hundred rupees) is at the rate of 11 per cent. (eleven per cent.) while on holdings of the valuation of Rs. 400 (four hundred rupees) and upwards it is at the rate of 5 per cent. (five per cent.) subject to a maximum of Rs. 480 (four hundred and eighty rupees) per annum In Manicktala, as will appear from the Report of the Government Boundary Committee, the aggregate rate on holdings up to an annual valuation of Rs. 100 (rupees one hundred) is 28·2 per cent (twenty-eight point two per cent.) while that on holdings of the annual valuation of Rs 3,000 (rupees three thousand) and upwards is 19·5 per cent. (nineteen point five per cent). It is therefore thus desirable that all rate-payers should be similarly taxed as in Calcutta. The municipal rates on the poor should not in any way be higher than those on the rich as in the newly added area.

(3) As will appear from the proceedings of the meeting of the Calcutta Corporation held on the 9th January, 1923, that they shall have to incur a capital expenditure of Rs. 90,00,000 (rupees ninety lakhs) for the improvement of the drainage, water-supply and lighting of Cossipore-Chitpur and Manicktala. They shall have certainly to incur not less than Rs. 20,00,000 (rupees twenty lakhs) for similar improvements in Garden Reach. Is it not therefore desirable that the rate-payers of the newly added area should be called upon to pay the same rate as those of the town of Calcutta to pay at least the interest of the loan to be raised for the execution of the said works, specially as the owners of holdings in the newly added area shall not have to pay an additional stamp duty at the rate of 2 per cent (two per cent,) on instruments of sale of immovable property as in the case of the town of Calcutta under section 82 of the Calcutta improvement Act ?

(4) The sanitary condition of the newly added area, specially Manicktala, is not a satisfactory one and as under section 90 of the new Calcutta Municipal Act, the Corporation shall have to spend annually not less than three lakhs of rupees (Rs. 3,00,000) for the newly added area in the execution of original improvement work for the said year and as the new Corporation will consist of thirteen ward Commissioners elected by the rate-payers of the newly added area, there is not the least doubt that the Corporation shall have to provide substantial amounts from the very commencement of the new Act for the improvement of the said area

(5) In the very first year of the commencement of the Act, a very substantial amount is likely to be entered in the budget for the improvement of the newly added area as out of twenty-one members of the Budget Special Committee, including the Chairman, eight members will be elected by the Commissioners of the newly added area

(6) Undue favour appears to have been shown to the rate-payers of the newly added area though for one year as the town of Calcutta, including the area added in 1889, paying a revenue of one crore and fifty-eight lakhs of rupees in 1921-22 shall have only twelve representatives in the Budget Special Committee excluding the Chairman thereof, while the rate-payers of the newly added area paying an aggregate revenue of only Rs 10,72,000 (rupees ten lakhs and seventy-two thousand) in the same year shall have eight repesentatives in the said Special Committee

# THE CALCUTTA IMPROVEMENT (AMENDMENT) BILL, 1923,

*(as amended by the Select Committee)*

## BILL

*further to amend the Calcutta Improvement Act, 1911.*

WHEREAS it is expedient further to amend the Calcutta Improvement Act, 1911, in the manner hereinafter appearing, Ben Act V of 1911

And whereas the previous sanction of the Governor-General has been obtained, under section 80A, sub-section (3), of the Government of India Act, to the passing of this Act 5 and 6, Geo V, c 61, 6 and 7, Geo V, c 37, 9 and 10, Geo V, c 101

It is hereby enacted as follows :—

Short title

**1.** This Act may be called the Calcutta Improvement (Amendment) Act, 1923.

New section substituted for section 54 of Bengal Act V of 1911

**2.** For section 54 of the said Act the following shall be substituted, namely —

Transfer to Board, for purposes of improvement scheme, of building or land vested in the Corporation or in the Commissioner of a Municipality

"54 (1) Whenever any building, or any street, square, or other land, or any part thereof, which—

(a) is situated in the Calcutta Municipality and is vested in the Corporation, or

(b) is situated in any part of any Municipality constituted under the Bengal Municipal Act, 1884, in which this section is for the time being in force, and is vested in the Commissioners of that Municipality,

is within the area of any improvement scheme and is required for the purposes of such scheme, the Board shall give notice accordingly to the Chairman of the Corporation or the Chairman of such Municipality, as the case may be, and such building, street, square, other land or part, shall thereupon vest in the Board subject to the payment of compensation, if any, to the Corporation or to such Commissioners, as the case may be, under sub-section (3)

(2) Where any land vests in the Board under the provisions of sub-section (1) and the Board make a declaration to the Corporation that such land will be retained by the Board until either a declaration is made by the Corporation under sub-section (1) of section 65, or a resolution is passed by the Board under sub-section (2) of that section, no compensation shall be payable by the Board to the Corporation in respect of that land.

(3) Where any land or building vests in the Board under sub-section (1) and no declaration is made by the Board that the land will be so retained, the Board shall pay to the Corporation, or to the

*(Clauses 3-4)*

Commissioners, as the case may be, as compensation for the loss resulting from the transfer of such land or building to the Board, a sum equal to the market value of the said land or building at the time when the general declaration in respect of other lands included in the scheme is made under the provisions of section 6 of the Land Acquisition Act, 1894, as amended by this Act, and where any building, situated on land in respect of which a declaration has been made by the Board under sub-section (*2*), is vested in the Board under sub-section (*1*), like compensation shall be payable in respect of such building by the Board

(*4*) If the Board fail to retain any land or any portion of land in accordance with the provisions of sub-section (*2*) after having declared their intention so to retain it, like compensation shall be payable by them to the Corporation in respect of such land

(*5*) If any question of dispute arises—

(*a*) as to the sufficiency of the compensation paid or proposed to be paid under sub-section (*3*) or sub-section (*4*), or

(*b*) as to whether any building or street, or square or other land, or any part thereof is required for the purposes of the scheme,

the matter shall be referred to the Local Government, whose decision shall be final."

Amendment of section 78

**3.** (*1*) (*i*) In clause (*ii*) of sub-section (*4*) and in sub-section (*8*) of section 78 of the said Act, for the words "four *per cent.*" the words "six *per cent.*" shall be substituted; and

(*2*) (*ii*) to that section the following shall be added, namely.—

"(*10*) Notwithstanding anything contained in clause (*ii*) of sub-section (*4*) or in sub-section (*8*) the rate of interest payable, under the provisions of that clause or that sub-section, as the case may be, shall be, or continue to be, four *per cent. per annum* in cases where the sum, in consideration of which the acquisition of the land has been abandoned, has been fixed under sub-section (*3*) before the date of the commencement of the Calcutta Improvement (Amendment) Act, 1923, and the agreement in respect of the payment of the same is executed before, on or within two months after, that date."

Amendment of section 79

**4.** In section 79 of the said Act for the words "four *per cent*" the words "six *per cent.*" shall be substituted.

C. TINDALL,

*Secretary to the Government of Bengal and*
*Secretary to the Bengal Legislative Council.*

GOVERNMENT OF BENGAL.

LEGISLATIVE DEPARTMENT.

NOTIFICATION.

*No. 1848L., dated Calcutta, the 23rd July, 1923.*—The following Report of the Select Committee on the Calcutta Municipal (No. II) Bill, 1923, (with the Bill, as amended by the Committee), is hereby published for general information.

## REPORT OF THE SELECT COMMITTEE ON THE CALCUTTA MUNICIPAL (No. II) BILL, 1923.

We, the undersigned members of the Select Committee, to which the Bill to provide for certain matters in connection with the Budget Estimates of the Corporation of Calcutta for the year 1924-25, the fixing of the rates at which the consolidated rate and the taxes for that year shall be levied and imposed, and the arrangements to be made in connection with the raising of loans during that year, for the fixing of the percentage of the consolidated rate in respect of the added areas during the four succeeding years and for the amendment of section 20 of the Calcutta Municipal Act, 1923, in respect of the qualification of electors, was referred, have considered the Bill and have the honour to submit this, our report, with the Bill, as amended by us, annexed hereto. In reprinting the Bill, all changes made by us have, so far as possible, been underlined.

2 The more important changes are as follows :—

*Preamble.*—We have made two minor drafting alterations which call for no remark

*Clause 3* —We consider that, with a view to expedition, the scrutiny of the Budget, as framed by the Chairman, should be made by a Special Committee appointed somewhat in the manner laid down in the Thirteenth Schedule to the Act of 1888.

We have added to the number of members that shall serve on this Committee from the Cossipore and Maniktala Municipalities The Garden Reach Municipality, we consider, is adequately represented under the Bill

We have provided for the representation of the Corporation on this Special Committee by placing on the Committee eight Commissioners elected from among the ward Commissioners and four Commissioners elected from among the nominated Commissioners.

*Clause 4.*—The Special Committee will report direct to the Corporation It is hoped that this will eliminate the present lengthy procedure under which the Corporation, after receiving the General Committee's revised Budget, refer the same again to another Committee of their own before considering the Budget.

We have provided in the usual manner, against failure by the Commissioners of the municipalities included in the added areas to elect their representatives to the Special Committee.

We have provided that the Commissioners from the added areas who will serve on the Special Committee shall also serve on the Corporation when that body considers the final Budget Estimates and proposals as framed by the Special Committee.

We have also provided against default by the Special Committee or by the Corporation in the final framing, and in the passing, of the Budget Estimates and proposals.

We have considered the proviso to the original clause 4, and in our opinion the situation for the year 1924-25 will best be met by arrangements under which the totals of the rate on holdings, lighting rate, water rate and the latrine fees levied in respect of a holding in any of the added areas under the Bengal Municipal Act shall be deemed to be the consolidated rate levied under the Calcutta Municipal Act, 1923, for the year 1924-25.

It is necessary, however, to provide for the assessment of any new building in the said areas which otherwise would escape taxation altogether during that year and we have made a provision accordingly.

Some members of the Committee wish to widen *clause 7* so as to give more relief to the added areas. Others wish to restrict the relief by confining it to the period during which the added areas are receiving no benefit under section 90 of the Calcutta Municipal Act, 1923. The majority of us, however, consider that the clause as framed should stand as an equitable working arrangement.

*Clause 8.*—We have considered the proposed modification of clause 8, and we are of opinion that the 30th day of September preceding the election is the correct final date to be taken.

We consider that, in view of the provisions of section 25, it is better to omit the first proviso to sub-clause (*a*) of clause 20 which is likely to create difficulty. We have made some other drafting alterations in the clause and made it more specific.

The insertion of the words " or having been " in sub-clauses (*a*), (*b*) and (*c*) is made with a view to taking in cases such as those of a person who is still residing in the ward but has changed his place of residence therein and also cases of persons who have changed their professions, etc.

*Clause 9*.—We realize that in the transitory period between the old system and new system of assessment (*i e*, in 1924-25) anomalous cases may arise, in which it is necessary that the Corporation should be able to apply equitable principles in modification of the strict letter of the law and also to prevent evasion. We have therefore, at the request of the Calcutta Corporation, inserted an enabling sub-clause in clause 9 to deal with this matter.

S. N. BANERJEA,
(*Member in charge*).

SURENDRA NATH ROY
H. P. DUVAL.
S. N. MALLIK.*
S. W. GOODE.*
JATINDRA NATH BASU
S. R. DAS.
D. J. COHEN.*
FANINDRA LAL DE.
A. WILLIS.
HEM CHANDRA NASKAR.
S. MAHBOOB ALEY.
ABDUS SALAM.†
AMULYADHONE ADDY.‡
D. C. GHOSE.

C. TINDALL,
*Secretary to the Government of Bengal and Secretary to the Bengal Legislative Council*

CALCUTTA;
*The 23rd July, 1923.*

* This member signs subject to his note of dissent to be sent in later.
† This member signs subject to his note of dissent, if any.
‡ This member signs subject to his note of dissent annexed.
NOTE.—Mr Syed Nasim Ali and Maulvi A. K. Fazlul Haque did not attend any of the meetings of the Select Committee.

## Note of Dissent by Babu Amulyadhon Addy, M.L.C.

Clauses 4 and 5 should be omitted on the following grounds :—

(1) Even ancestral dwelling-houses which are regarded as sacred by the Indians are acquired to recoup the cost of construction of roads with the drainage, sewering, water-supply and lighting thereof and the owners of the said houses are called upon to pay heavy sums for the exemption of the said houses from acquisition notwithstanding the fact that the opening of roads not only increases the value of adjacent lands but also improves the sanitation of the locality in which the public-at-large are benefited.

(2) I admit an interest at the rate of 6 per cent. (six per cent.) on loans is reasonable, but I am strongly of opinion that it would be unreasonable on exemption fees which are fixed by the Board and against whose decision the persons aggrieved have no right of appeal to a higher and disinterested authority.

If the said suggestion is not accepted, then the words "not exceeding six per cent" may be substituted for the words "six per cent." so that the Board may fix the rate of interest from time to time having regard to the state of the money-market of Calcutta and specially the rate of interest which is paid by the Government of India on Promissory Notes.

It is regrettable that the Select Committee have thought it fit to amend the Calcutta Improvement Act simply by giving unlimited powers to the Board for the acquisition of surplus lands and by increasing the rate of interest on exemption fees from 4 to 6 per cent. (four to six per cent) per annum. It is also regrettable that the suggestions of the public bodies to which the original Bill was referred for opinion, namely the constitution of the Board, Right of Appeal to the High Court on questions of fact and extension of the Improvement Act to Tollygunge and South Suburban Municipalities have been ignored by the Select Committee.

# THE CALCUTTA MUNICIPAL (No. II) BILL, 1923;

*(as amended by the Select Committee.)*

[NOTE.—All changes made by the Select Committee have, so far as possible, been underlined]

A

# BILL

*to provide for certain matters in connection with the Budget Estimate of the Corporation of Calcutta for the year 1924-25, the fixing of the rates at which the consolidated rate and the taxes for that year shall be levied and imposed and the arrangements to be made in connection with the raising of loans during that year, for the fixing of the percentage of the consolidated rate in respect of the added areas during the four succeeding years, and for the amendment of section 20 of the Calcutta Municipal Act, 1923, in respect of the qualification of electors.*

Preamble

WHEREAS it is expedient to give to representatives of the Commissioners of the municipalities which are to be included in Calcutta, under the provisions of the Calcutta Municipal Act, 1923, an opportunity of taking part in the framing and passing of the Budget Estimate of the Corporation of Calcutta for the year 1924-25, in the fixing of the rates at which the consolidated rate and the taxes for that year shall be levied and imposed and in the arrangements that are to be made for the raising of any loan during that year, and so to provide for the framing and passing of the said Budget Estimate, the fixing of the said rate and the arrangements for the said loans; Ben. Act III of 1923.

And whereas it is expedient that the Corporation do fix for the year 1924-25 a favourable percentage in respect of the levy of the consolidated rate on lands and buildings in each of the areas added to Calcutta by the Calcutta Municipal Act, 1923, and that they have power to fix a special percentage in respect of the lands and buildings in any such areas during the four succeeding years;

And whereas it is expedient to amend section 20 of the said Act in respect of the minimum amount to be paid by a person as consolidated rate, tax or rent so as to entitle him to be an elector;

It is hereby enacted as follows:—

Short title and extent

1. (1) This Act may be called the Calcutta Municipal (No. II) Act, 1923.

(2) It extends to Calcutta as defined in clause (11) of section 3 of the Calcutta Municipal Act, 1923.

Manner of preparation and passing of Budget Estimate of the Calcutta Corporation for 1924-25, etc.

2. Notwithstanding anything contained in the Calcutta Municipal Act, 1899, or in the Calcutta Municipal Act, 1923, the Budget Estimate of the Corporation of Calcutta for the year 1924-25 for the purposes of the Calcutta Municipal Act, 1923, shall be prepared and passed, and the rates at which the consolidated rate and the taxes for the said year, for the said purposes shall be levied and imposed shall be determined and fixed, and the sums of money, if any, that Ben. Act III of 1899 Ben. Act III of 1923

(Clause 3.)

shall be borrowed in the said year for the said purposes shall be determined, in the manner set forth in sections 3 to 5.

Preparation of Budget Estimate and reference to Special Committee.

3. (1) The Budget Estimate of income and expenditure for the year 1924-25 of the Corporation of Calcutta to be constituted under the Calcutta Municipal Act, 1923, shall be prepared, with reference to the area specified in Schedule I to that Act and for the purposes of that Act, by the Chairman of the Corporation of Calcutta as constituted under the Calcutta Municipal Act, 1899, and the said Chairman shall, on or before the tenth day of January, 1924, place the same, together with a statement of proposals as to the taxation which it will, in his opinion, be necessary or expedient to impose under the Calcutta Municipal Act, 1923, in the year 1924-25, before the Corporation of Calcutta as constituted under the Calcutta Municipal Act, 1899, at a special meeting convened for the purpose, and the Corporation of Calcutta, as so constituted, shall forthwith refer the said Budget Estimate and proposals for consideration to a Special Committee which shall consist of the following members:— Ben Act III of 1923. Ben Act III of 1899

(i) the Chairman of the Calcutta Corporation;

(ii) eight Commissioners of the Calcutta Corporation to be elected by the Corporation at the said special meeting from among the ward Commissioners;

(iii) four Commissioners of the Calcutta Corporation to be elected by the Corporation at the said special meeting from among the appointed Commissioners;

(iv) three Commissioners of the Cossipore-Chitpur Municipality, to be elected by the Commissioners of that Municipality at a special meeting held before the first day of January, 1924;

(v) three Commissioners of the Maniktala Municipality, to be elected by the Commissioners of that Municipality at a special meeting held before the first day of January, 1924; and

(vi) two Commissioners of the Garden Reach Municipality, to be elected by the Commissioners of that Municipality at a special meeting held before the first day of January, 1924:

Provided that, if the Commissioners of any of the municipalities referred to in clauses (iv), (v) and (vi), fail to elect the full number of members to be elected by them by the first day of January, 1924, the Local Government shall nominate a sufficient number of persons to complete the said number, and such persons shall be deemed to be members duly elected by the said Commissioners.

[illegible] names of the members of the Special Committee shall be published in the Calcutta Gazette.

(*Clause 4.*)

(*b*) The Chairman of the Calcutta Corporation shall be Chairman of the Special Committee, and the procedure of the Special Committee shall be in accordance with the rules made for the business of Standing Committees of the Corporation of Calcutta.

(*c*) The Special Committee, as so constituted, shall, on or as soon as may be after the tenth day of February, 1924, consider the estimates and proposals submitted by the Chairman of the Corporation and subject to such modifications and additions therein or thereto as they may think fit to make, shall prepare a Budget Estimate of income and expenditure of the Corporation of Calcutta to be constituted under the Calcutta Municipal Act, 1923, for the year 1924-25, and shall propose the levy of the consolidated rate and other taxes for that year at such rates as they may deem necessary. Ben. Act III of 1923.

Passing of Budget Estimate, etc.

4. (*1*) The Budget Estimate, as finally framed by the said Special Committee, together with a statement of proposals as to the taxation which it will, in the opinion of the Special Committee, be necessary or expedient to impose under this Act in the year 1924-25, shall be placed before the Corporation of Calcutta as constituted under the Calcutta Municipal Act, 1899, on or before the seventh day of March, 1924, and the said Corporation shall consider, on behalf of the Corporation of Calcutta to be constituted under the Calcutta Municipal Act, 1923, the said proposals of the Special Committee, and in so doing shall apply thereto the provisions of the Calcutta Municipal Act, 1923, so far as in their opinion these can be suitably applied, and shall, on or before the twenty-second day of March, 1924, pass the same Budget Estimate, subject to such further modifications or additions as to them shall appear to be expedient, and shall fix, with reference to the Budget Estimate as so passed, the rates at which the consolidated rate and the taxes mentioned in the Calcutta Municipal Act, 1923, shall be levied and imposed for the year commencing on the first day of April, 1924, and the sums of money (if any) which shall be borrowed during the said year for the purposes of the Calcutta Municipal Act, 1923: Ben. Act III of 1899

Provided that, notwithstanding anything contained in the Calcutta Municipal Act, 1923, the total amount by way of—

(*i*) the rate on holdings,

(*ii*) the lighting rate (if any),

(*iii*) the water rate (if any), and

(*iv*) the latrine fees (if any),

assessed in respect of any holding in any of the areas added to Calcutta by the Calcutta Municipal Act, 1923, shall be deemed to be the consolidated rate levied under the provisions of the Calcutta Municipal Act [illegible] in respect [illegible] and buildings included in [illegible] for the year 1924-25 for all the purposes [illegible]

Provided also that if any new building, as defined in the Calcutta Municipal Act, 1923, is erected during

(*Clause 5.*)

the year 1924-25 on any premises in any of the said areas, the Executive Officer may cause such building to be valued, and the consolidated rate on the premises shall be levied at the rate, fixed for that year for the purpose of the levy of the consolidated rate on lands and buildings in Calcutta generally. The valuation so made shall remain in force until the next general revaluation of the ward under the provisions of the Calcutta Municipal Act, 1923. Ben Act III of 1923.

(*2*) For the purposes of this section, notwithstanding anything contained in the Calcutta Municipal Act, 1899, the Corporation of Calcutta shall be deemed to include the additional members referred to in clauses (*iv*), (*v*) and (*vi*) of sub-section (*1*) of section 3. Ben Act III of 1899

(*3*) If the Special Committee fail to submit to the Corporation of Calcutta by the seventh day of March, 1924, the Budget Estimate and proposals referred to in sub-section (*2*) of section 3, the Budget Estimate and proposals of the Chairman referred to in sub-section (*1*) of that section shall be deemed to be the Budget Estimate and proposals of the Special Committee finally framed and duly made in accordance with this Act and the Corporation shall consider them accordingly. If the Corporation of Calcutta fail to consider and to pass by the twenty-second day of March, 1924, the Budget Estimate of the Special Commitee, the Budget Estimate and proposals of the Special Committee shall be deemed to be the Budget Estimate and proposals of the Corporation of Calcutta duly made and passed under the provisions of this Act.

Validity of Budget Estimate for 1924-25, etc.

**5.** The Budget Estimate of the Corporation of Calcutta for the year 1924-25, as so passed, and the rates at which the consolidated rate and taxes shall be levied and imposed, as so determined and fixed, and the decision of the Corporation in respect of any loan or loans to be raised, shall, notwithstanding anything contained in the Calcutta Municipal Act, 1923, have for all the purposes of that Act full force and effect in Calcutta as defined in clause (*11*) of section 3 of that Act during the year 1924-25 and—

(*i*) the said Budget Estimate shall be deemed to be the Budget Estimate duly passed,

(*ii*) the consolidated rate and taxes levied and imposed at the rates so determined and fixed shall be deemed to be the consolidated rate and taxes duly levied and imposed, and

(*iii*) the loans, if any, incurred in accordance with the said decision shall be deemed to be loans duly incurred,

by the Corporation of Calcutta as constituted under the Calcutta Municipal Act, 1923, unless and until such Budget Estimate, consolidated rate and taxes and decision in regard to loans are added to, modified or varied by that Corporation and in accordance with the provisions of that Act.

(*Clauses 6-8.*)

Power to Chairman to inspect and take extracts from documents, etc.

**6.** The Chairman of the Corporation of Calcutta as constituted under the Calcutta Municipal Act, 1899, and any officer of the said Corporation specially empowered by him in this behalf shall from the commencement of this Act and notwithstanding anything contained in the Bengal Municipal Act, 1884, have power to inspect and take extracts from the assessment books and other records of the Maniktala, Cossipore-Chitpur, Garden Reach and Tollygunge Municipalities for all or any of the purposes of this Act and of the Calcutta municipal Act, 1923, and the Commissioners of the said Municipalities shall render to the said Chairman and to any such officer all assistance that he may require for the said purposes.

Ben. Act III of 1899.

Ben. Act III of 1884.

Ben. Act III of 1923.

Power to Corporation to fix lower percentage rate for the consolidated rate in respect of lands and buildings in added areas during the years 1925-26 to 1928-29.

**7.** Notwithstanding anything contained in the Calcutta Municipal Act, 1923, the Corporation, in fixing the rate at which the consolidated rate for any of the years 1925-26, 1926-27, 1927-28 or 1928-29 on lands and buildings in Calcutta generally shall be levied and imposed, may fix, in respect of the lands and buildings in any of the several areas referred to in sub-clauses (*i*) to (*v*) of clause (*l*) of section 3 of that Act, a rate at a lower percentage on the annual valuation than the percentage which is fixed for that year generally in respect of lands and buildings in Calcutta.

Amendment of section 20 of the Calcutta Municipal Act, 1923.

**8.** In section 20 of the Calcutta Municipal Act, 1923,—

(*a*) in sub-clause (*a*)—

(*i*) after the word "being" in the three places where it occurs the words "or having been" shall be inserted;

(*ii*) the first proviso shall be omitted;

(*iii*) for the second proviso the following shall be substituted, namely:—

"Provided that such payment has been made in respect of the twelve months ending on the 30th day of September last preceding the election."

(*b*) for sub-clause (*b*) the following shall be substituted, namely:—

"(*b*) being or having been the occupier of any premises valued for assessment purposes under this Act or, in the case of the first general election held under this Act, under the Calcutta Municipal Act, 1899, or of a portion of any such premises has, at any time during the twelve months ending the 30th September immediately preceding the election, paid rent for such occupancy for at least six months during the said twelve months at a rate not less than Rs. 25 per mensem, and has made application to the Executive Officer and his name entered in a Register to be maintained for the purpose."

(*Clause 9.*)

(*c*) for sub-clause (*c*) the following shall be substituted, namely :—

"(*c*) being or having been, for not less than six consecutive months during the twelve months ending the 30th September preceding the election, the owner of a hut in a bustee valued for assessment purposes under Chapter X, or in the case of the first general election held under this Act under the corresponding Chapter of the Calcutta Municipal Act, 1899, and on account of which a sum of not less than Rs. 12 has been paid during the said twelve months in respect of the consolidated rate, has on application to the Executive Officer had his name entered in a Register to be maintained for the purpose"

Power to remove difficulties

**9.** If any difficulty arises in assessing and levying a consolidated rate for the year 1924-25 in respect of any of the lands, or of the lands and buildings, in the areas added to Calcutta by the Calcutta Municipal Act, 1923, the Local Government, on the recommendation of the Corporation, may make such order as to them shall appear to be necessary in order to enable the Corporation to assess and levy a consolidated rate for that year in respect of such land or such land and building. [*Cf* XL of 1920, s 40]

Any such order may modify the provisions of this Act and of the Calcutta Municipal Act 1923, so far as to the Local Government shall appear to be necessary for carrying the order into effect

C. TINDALL,

*Secretary to the Government of Bengal and Secretary to the Bengal Legislative Council*

# The Calcutta Gazette

WEDNESDAY, JULY 25, 1923.


## PART VI.

***Bills introduced in the Council of State and Legislative Assembly, Reports of Select Committees presented to the Council and Assembly, and Bills published under Rule 18 of the Indian Legislative Rules.***

### GOVERNMENT OF INDIA.

#### LEGISLATIVE DEPARTMENT.

The following Bill was introduced in the Legislative Assembly :—

*A Bill further to amend the Indian Limitation Act, 1908.*

WHEREAS it is expedient further to amend the Indian Limitation Act, 1908; It is hereby enacted as follows — IX of 1908

Short title

**1.** This Act may be called the Indian Limitation (Amendment) Act, 192 .

Amendment of section 19, Act IX of 1908

**2.** In section 19 of the Indian Limitation Act, 1908 (hereinafter referred to as the said Act), the following amendments shall be made, namely :— IX of 1908

(*a*) In sub-section (*1*), for the words "an acknowledgment" the words "a clear and unconditional acknowledgment" shall be substituted, and for the words "signed by" the words "signed and dated by" shall be substituted ;

(*b*) Sub-section (*2*) shall be omitted ;

(*c*) Explanation I shall be omitted ; and

(*d*) for Explanation II the following shall be substituted, namely :—

"*Explanation II.*—For the purposes of this section 'signed' means signed either personally or by an agent duly authorised in writing in this behalf."

Amendment of section 20, Act IX of 1908

3. (a) For sub-section (1) of section 20 of the said Act, the following shall be substituted, namely :—

"Where anything is paid either as interest or part of the principal of a debt or legacy before the prescribed period by the debtor or by his agent duly authorised in writing in this behalf, the entry as to such payment being signed and dated by the payer, a fresh period of limitation shall be computed from the date of payment."

(b) Sub-section (2) of the same section shall be omitted.

Amendment of section 21, Act IX of 1908

4. In sub-section (1) of section 21 of the said Act, after the word "authorised" wherever it occurs, the words "in writing" shall be inserted.

## STATEMENT OF OBJECTS AND REASONS.

The object of the proposed amendments is to decrease litigation, perjury, forgery and fraud. At present many facts are required to be proved by oral evidence which the Courts may or may not believe and the result is always uncertain.

Under the proposed amendment, a clear and unconditional acknowledgment duly signed and dated by the person liable or by his agent duly authorized in writing will be required to extend time. Debtors should not be taken by surprise by an ambiguous or undated writing which might be used to extend the period of limitation.

In section 20, there is always a dispute whether the payment was made on account of interest as such. Under the amended section, part payment of principal and payment of interest have been placed on equal footing. Similar amendment has been made in section 21. Authority of an agent to extend time under any of the sections referred to in this Bill must always be in writing and not oral.

I hope the proposed amendments, if passed into law, will considerably reduce litigation and the multiplicity of witnesses will be avoided.

GIRDHARILAL AGARWALA, M.L.A.

*Dated the 7th December, 1922.*

L. GRAHAM,
*Secretary to the Government of India (offg.).*

## GOVERNMENT OF INDIA.

### LEGISLATIVE DEPARTMENT.

The following Bill was introduced in the Legislative Assembly on the 2nd July, 1923:—

### No. 24 OF 1923.

*A Bill further to amend the Indian Income-tax Act, 1922, for certain purposes.*

WHEREAS it is expedient further to amend the Indian Income-tax Act, 1922, for certain purposes hereinafter appearing; It is hereby enacted as follows — XI of 1922

Short title

**1.** This Act may be called the Indian Income-tax (Further Amendment) Act, 1923

Amendment of section 4, Act XI of 1922

**2.** In sub-section (2) of section 4 of the Indian Income-tax Act, 1922 (hereinafter referred to as the said Act), for the words "shall be deemed to be profits and gains of the year in which they are received or brought into British India," the following words shall be substituted, namely — XI of 1922

"shall, if they are received in or brought into British India, be deemed to have accrued or arisen in British India and to be profits and gains of the year in which they are so received or brought."

Insertion of new Chapter VA in Act XI of 1922

**3.** After Chapter V of the said Act the following Chapter shall be inserted, namely —

"CHAPTER VA.

SPECIAL PROVISIONS RELATING TO CERTAIN CLASSES OF SHIPPING.

Liability to tax of occasional shipping

**44A.** The provisions of this Chapter shall, notwithstanding anything contained in the other provisions of this Act, apply for the purpose of the levy and recovery of tax in the case of any person who resides out of British India and carries on business in British India in any year as the owner or charterer of a ship (such person hereinafter in this Chapter being referred to as the principal), unless the Income-tax Officer is satisfied that there is an agent of such principal from whom the tax will be recoverable in the following year under the other provisions of this Act.

Return of profits and gains

**44B.** (1) Before the departure from any port in British India of any ship in respect of which the provisions of this Chapter apply, the master of the ship shall prepare and furnish to the Income-tax Officer a return of the full amount paid or payable to the principal, or to any person on his behalf, on account of the carriage of all passengers, live-stock or goods shipped at that port since the last arrival of the ship thereat.

(2) On receipt of the return, the Income-tax Officer shall assess the amount referred to in sub-section (1), and for this purpose may call for such accounts or documents as he may require, and one-twentieth of the amount so assessed shall be deemed to be the amount of the profits and gains accruing to the principal on account of the carriage of the passengers, live-stock and goods shipped at the port

(3) When the profits and gains have been assessed as aforesaid, the Income-tax Officer shall determine the sum payable as tax thereon at the rate for the time being applicable to the total income of a company, and such sum shall be payable by the master of the ship, and a port-clearance shall not be granted to the ship until the Customs-collector, or other officer duly authorised to grant the same, is satisfied that the tax has been duly paid.

Adjustment.

44B. Nothing in this Chapter shall be deemed to prevent a principal from claiming, in any year following that in which any payment has been made on his behalf under this Chapter, that an assessment be made of his total income in the previous year, and that the tax payable on the basis thereof be determined in accordance with the other provisions of this Act, and, if he so claims, any such payment as aforesaid shall be treated as a payment in advance of the tax and the difference between the sum so paid, and the amount of tax found payable by him shall be paid by him or refunded to him, as the case may be."

---

## STATEMENT OF OBJECTS AND REASONS.

Some doubt has been expressed whether sub-section (2) of section 4 of the Indian Income-tax Act, 1922, fully secures the intention of the Act that the profits and gains of a business accruing or arising out of British India to a person resident in British India should be assessed when received in, or brought into, British India. Clause 2 of the Bill is intended to place the matter beyond dispute.

2. Difficulties have arisen in the assessment to income-tax of occasional shipping belonging to, or chartered by, persons or companies whose principal place of business is not in British India and who have no regular agents in India from whom the tax will be recoverable in the following year Clause 3 of the Bill accordingly makes special provision for the assessment of the profits and gains of such shipping.

BASIL P. BLACKETT.

SIMLA, *the 18th June, 1923.*

---

L. GRAHAM,

*Secretary to the Government of India (offg.).*

REGISTERED No. C207. No. 30 of 1923.

# The Calcutta Gazette

WEDNESDAY, JULY 25, 1923

## SUPPLEMENT.

### *Official Papers.*

[*Non-Subscribers to the* GAZETTE *may receive* SUPPLEMENT *separately on payment of five rupees per annum if delivered in Calcutta, or seven rupees and eight annas if sent by post*]

CONTENTS


| | Page |
|---|---|
| Construction of a new bridge between Calcutta and Howrah to replace the present floating bridge | 1073—1094 |
| Resolution of the budget estimate of income and expenditure of the Howrah Bridge for the year 1923-24 | 1095 |
| Monthly Weather and Crop Report of Bengal for June 1923 | 1096 |
| Weather and Crop Report for the week ending on the 18th July 1923 | 1097—1100 |
| Approximate return of traffic on the Circular and Eastern Canals for the week ending Saturday, the 14th July 1923 | 1101 |
| Statement showing the daily gauge readings of certain rivers for the week ending 19th July 1923 | 1102—1108 |
| Vital Statistics of the Towns of Bengal for the week ending 14th July 1923 | 1109 |
| Daily rainfall recorded in Bengal for the month of June 1923 | 1110—1115 |
| Statement of weekly gauge-readings on the rivers in Bengal | 1116—1117 |


## CONSTRUCTION OF A NEW BRIDGE BETWEEN CALCUTTA AND HOWRAH TO REPLACE THE PRESENT FLOATING BRIDGE.

## GOVERNMENT OF BENGAL.

### MARINE DEPARTMENT.

CALCUTTA, THE 21ST JULY 1923.

RESOLUTION—No. 2466 Marine.

IN Bengal Government Resolution No. 334 Marine, dated the 29th January 1923, a Committee representative of the chief interests concerned was appointed to consider proposals for financing the construction of a bridge of

the cantilever type which had been recommended by the Committee of Engineers appointed in November 1921. In addition to drafting definite proposals for meeting the estimated cost of a bridge of this type, with its approaches, the Committee was requested to report on the ability of the trade and people of Calcutta and its neighbourhood to bear the charges which would be involved.

2. The Committee have submitted their report which, together with the notes of dissent recorded by some of the members, is published for general information. The report indicates that it will be financially possible to follow the recommendation of the Committee of Engineers in favour of the construction of a cantilever bridge, and Government will now proceed with the necessary measures for the construction of such a bridge. They will be glad to receive any comments from public bodies or others interested, in regard to the recommendations for financing the bridge

By order of the Governor in Council,

A. MARR,

*Secretary to the Government of Bengal*

## NEW HOWRAH BRIDGE.

### Report of the Finance Committee.

In Bengal Government resolution No 334 Marine, dated the 29th January 1923, this Committee was appointed to furnish assistance to Government in drafting proposals to meet the cost of a bridge between Calcutta and Howrah of the cantilever type—a type which had been recommended to Government by a Committee of Engineers appointed to advise Government as to the most suitable type of bridge to be constructed The Committee were also requested to furnish their views on proposals which had been drawn up for the levy of a cess on passengers and goods coming into and leaving Calcutta, and in particular on the ability of the trade and people of Calcutta and its neighbourhood to bear the charges incidental to the construction and maintenance of a bridge of the proposed cantilever type

2 The Committee of Engineers had estimated the cost of a bridge of the cantilever type at £2,000,000 This represented the cost of the bridge itself and did not include the expenditure necessary for the acquisition of land, the construction of the approaches and any compensation necessary to interests injuriously affected We have had placed before us a more detailed statement [including (1) an estimate of the actual cost of construction of the bridge itself, furnished by Mr Palmer, Consulting Engineer to the Secretary of State, (2) detailed estimates for the acquisition of land and the construction of approaches, and (3) the claims for compensation put forward by the interests injuriously affected], which gives the total expenditure required in connection with the construction of the new bridge as Rs 6,38,00,000. In this estimate, compensation for interests injuriously affected has been entered at the full amount claimed This expenditure will have to be met by means of a loan, and in our opinion a suitable period for a loan for a work of this character should be 60 years The annual charges on account of interests and sinking fund will depend on the rate at which the loan can be raised We have been advised that with a guarantee from Government, which we assume would be given, or if Government themselves raised the loan, it should be possible to raise the amount required at not more than 5 per cent On this basis an annual payment of approximately Rs 35 lakhs would be required

There are considerations, however, which, in our opinion, make it unlikely that Rs 35 lakhs will really be needed annually As has been stated, the estimate above given includes the full amount claimed as compensation for interests injuriously affected We feel justified, however, in assuming that these claims will not be fully entertained and that a considerable reduction is possible There is a likelihood, too, of cheaper money in the near future and it has been indicated to us that there is also the possibility of cheaper construction Taking all these facts into account we are of opinion that a sum of approximately Rs 31 lakhs should suffice to meet the charges for the construction of a cantilever bridge The problem before us then is to consider whether and by what means this sum could be raised

3 The cost of the present bridge is met by a terminal tax of 2 pies per maund of goods (excluding coal and salt) carried into or out of Howrah railway station on the East Indian Railway, and by an annual contribution from the Bengal-Nagpur Railway. This is, however, only for upkeep. The initial cost of the bridge was met by a toll on passengers, animals and vehicles using the bridge, by a fee of 2 pies per maund on goods and of 3 pies per passenger conveyed on the East Indian Railway to and from Howrah, and by the earnings of ferry steamers The passenger tax and the local toll were abolished in 1888, when the capital cost and interest had been paid off The charge for the bridge was thus mainly borne by those using the bridge

4 We were furnished with proposals for raising the amount necessary for the new bridge by the imposition of a cess on goods imported into and exported from Calcutta by rail and river, and a cess on passenger traffic by the various railways and steamers. It was maintained in justification of these proposals that they represented the best method of carrying out the principle which should govern the financing of this bridge, viz , that the cost should be speard over a very wide basis, seeing that the bridge was a necessity for Calcutta as a whole, for all sections of the community and for the social, commercial and industrial life of Calcutta. This principle we consider sound, but we are not prepared to agree that the course suggested is the best method of carrying it out. Agreeing as we do that the bridge is required for Calcutta as a whole, we consider that it is primarily a civic necessity, and as such should ordinarily be a charge on the population generally in accordance with recognised methods by which municipal activities are financed—in other words, a charge on the ratepayers. We realise that it would not be possible at the present time to impose a charge of this magnitude on the ratepayers of Calcutta and neighbouring municipalities, but we consider that a levy framed on the rateable value of these municipalities should form the basic element in making up the amount required to meet the charges on account of the bridge

5. It has been, and will be, urged that the Calcutta Corporation is faced with large activities in the matter of water-supply, drainage, etc , which may necessitate an increase in the rates But a new bridge between Calcutta and Howrah is a matter of no less urgency than any of the municipal schemes now in contemplation, and there is, in our opinion, no getting out of the fact that the liability for the new bridge, whether it be of the cantilever or any cheaper type, should rest in the first instance on the people of Calcutta and its neighbourhood We do not propose that the Calcutta Corporation shall be required to contribute a specific sum or a specific proportion out of their revenues We consider that, for the purposes of the bridge, there should be a separate tax on the ratepayers of Calcutta and its neighbourhood, based on the existing system of municipal taxation, and we should bring in the municipal authorities in this matter only in requiring their machinery for the purposes of collection In our opinion, it will be reasonable, and we do not think we are making an excessive demand, that a tax of one per cent on the rateable valuation of Calcutta should be imposed for the purpose of the bridge, with a tax on a similar basis in the suburban municipalities We include Howrah in this connection Although it is urged by the representative of the Howrah Municipality that for Howrah itself a bridge is not a matter of vital necessity, the advantages that will accrue to this town from the new bridge will be considerable and Howrah cannot escape contributing its share We are advised that on existing valuation a sum of about seven lakhs can be raised from these sources This is less than a quarter of the required amount, and we do not think that this is an unreasonable demand to make under present conditions on the citizens of Calcutta and its neighbourhood

6 Having thus determined what in our opinion should be the basic element in the levy, we have given consideration to various other suggestions for the realisation of the balance.

7 First and most important among these is that which was originally put before us—a cess on trade It may be urged that the Howrah bridge benefits only the trade which passes over it, that, precisely because this was so, no other interest were asked to pay towards the construction or maintenance of the present bridge, and that consequently no other traffic should be made to contribute towards the new one. But a bridge between Howrah and Calcutta is a necessity to the general trading and commercial life of both cities and on this ground and because it is desirable to spread the expenditure over a very wide basis, we consider that the trade of Calcutta generally should, as far as possible, be required to contribute. There is, moreover, the important practical consideration that any addition made to the railway charges on traffic to and from Howrah and depôts on the Howrah side of the river is automatically applied to traffic carried over the East Indian Railway to and

from stations on the Calcutta side of the river. If, therefore, the latter traffic were excluded from the operation of the cess imposed for the purpose of financing the bridge, it would nevertheless have to bear the additional burden, the only difference being that the extra amounts thus paid by it would be appropriated by the railway instead of by the bridge authority We believe that a cess on goods imported into, and exported from, Calcutta is feasible. Such a cess is already borne by the traffic which is received or despatched by the East Indian Railway and there is not, in our opinion, any reason why it should not be made universal We recommend, subject to the qualifications mentioned later, such a cess on all traffic brought into or exported from any railway station within Howrah and Calcutta, or brought into or exported from the port of Calcutta by boat or inland steamer Imports and exports by sea we would not assess - this would be tantamount to an addition to Customs duties and, therefore, open to objection Our proposals would, therefore, leave untouched that large amount of traffic entering through the Port of Calcutta which is absorbed in Calcutta itself On the principle that trade generally should pay its share towards the construction of the bridge, this traffic should not escape and, in our opinion, it would bear a cess with no more difficulty than the traffic by rail But we can suggest no practicable method of differentiating at the time of import between goods to be absorbed in Calcutta and other goods, and therefore consider the collection of the cess on this traffic to be impossible It has been objected that the collection of a cess on goods carried by country boat will be no less impracticable, but we consider that it can be done without difficulty through the medium of the Port Commissioners' establishment A cess on road traffic would demand an excessive organisation and create much inconvenience and we do not recommend it In the original proposals put before us a cess at 3 pies per maund was suggested In our opinion this would be too heavy an impost The existing rate on the East Indian Railway, 2 pies per maund, has been based on what the traffic has proved able to bear We see no reason why, if it is required, this rate should not be made universal, but if our other suggestions for the collection of the balance are approved, it will probably be necessary to impose a rate of only one pie per maund. The qualification necessary to our general recommendation are that salt and coal, which are already exempted, should continue to be so and that manganese should be added to this class although now assessed to the terminal tax

8 The foregoing recommendation has reference solely to what is generally known as goods traffic There is, however, a not inconsiderable traffic in parcels This is of two classes—railway parcel traffic and postal parcel traffic It has been urged that, following our conclusions as regards goods traffic a cess might suitably be imposed on parcels While we agree that this would prove a useful source of income, we feel that it would seriously interfere with local retail trade, while the difficulties of collection would be considerable We therefore hesitate to recommend it

9. Following the principle that the basis of taxation should be made as wide as possible, we recommend the taxation of passengers by rail to and from stations in Howrah and Calcutta A tax of 6 pies per passenger is already imposed for the benefit of the Calcutta Improvement Trust on-

(*a*) Every passenger by railway brought to or taken from any station in the Calcutta or Howrah municipalities, provided the journey begins or ends outside a radius of 30 miles from Calcutta (*vide* section 83 of the Calcutta Improvement Act, 1911)

(*b*) Every passenger by inland vessel brought to or taken from any landing place in the Port of Calcutta within 5 miles of Government House, provided the journey begins or ends outside a radius of 30 miles from Calcutta

We do not consider that an increase of this tax to 9 pies per ticket (3 pies to be retained for the bridge) would create any appreciable hardship, while a flat rate of 3 pies per ticket is not an unreasonable charge on persons travelling within the 30-mile radius. It may be necessary to vary both the amount of the charge and the method of applying it in respect to short

distance suburban passengers, who travel on monthly tickets issued at concession rates Such modification will not materially affect the financial result

10 Passengers by sea do not come within the scope of taxation for the Calcutta Improvement Trust, but we consider this a legitimate source for the purposes of the bridge—a tax of 8 annas per person would not press unduly

11. Opinions differ as to the advisability of imposing a tax on passengers by the ferry service of the Port Commissioners, the objections being mainly on the ground that these passengers are chiefly working class people, who could not bear the additional impost without hardship. There seems, however, little distinction between such passengers and, the short journey passengers travelling third class on railways, and when a cess of 3 pies is proposed to be levied on the latter, there seems no ground why a similar charge should not be paid by the former We would impose a 3 pies cess in cases where the fare for the single journey is one anna or more

12 There remains for consideration in the matter of taxation the case of tramway passengers The latest designs for the new bridge provide for two separate tramway tracks, one on either side of the bridge In 1914, when consideration was given to the financing of the proposed new bridge—then estimated to cost one crore of rupees it was suggested that the Calcutta Tramways Company should contribute Rs 25,000 per annum The Tramways Company did not accept this suggestion, but intimated their readiness to pay a track rent of Rs 4,000 per mile of double track and to renew and repair the road surface of the bridge between the tramway and 18 inches beyond the rails on each side They further indicated their readiness to pay a sum towards the construction of the bridge, but left this for further consideration, pending Government's views on their suggestions We have seen the Joint Managers of the Company and they have repeated the previous offer as regards track-rent, but they are not prepared to make any statement as to a contribution towards the capital account for construction. We discussed with them suggestions that had been made for a cess on tramway passengers, but found them strongly opposed to any such taxation—even in the case of passengers travelling over the new bridge In their opinion, a traveller from Howrah to Calcutta would prefer to walk across the bridge rather than pay for the comfort of being conveyed across the bridge With this view we are unable to agree With the new bridge the journey from Howrah to Calcutta and *vice versa* will be longer and involve climbing a long slope at one end, and the employee of an office in the vicinity of Clive Street or Dalhousie Square will be quite ready to use the tram when he can get it all the way between Howrah and his office

13. We realize, however, that a surcharge on tramway passengers may prove of little value unless accompanied by a toll on foot passengers We do not favour the imposition of tolls, if it can be avoided, and we would prefer therefore a direct contribution from the Tramways Company The traffic of this Company should increase very considerably and the linking up of the Howrah and the Calcutta systems should prove of great advantage to the Company The Company will derive great benefit from the new bridge; and we do not think that the payment of a track rent of Rs. 4,000 is at all commensurate with the benefits that will accrue to them. A contribution of Rs. 50,000 per annum is the least that we should expect from the Tramways Company.

14 These constitute our suggestions in regard to the items of taxation that can be imposed for the purposes of the bridge They cover the contributions which can be realised from the public and trade There are certain contributions, however, which may also be expected from other sources. In the scheme for financing the new bridge set out in Bengal Government resolution No. 2151 Marine, of the 18th June 1914, it was suggested that the local Government should contribute a sum of one lakh annually, or roughly, one-sixth of the total annual contributions towards the construction of a bridge estimated to cost one crore. In making this

suggestion, Government stated that while they did not consider it would be justifiable to construct the new bridge at the expense of the general tax payer and were consequently not prepared to take upon themselves the whole cost of providing it, their interest in Calcutta was so great that they were prepared to bear a reasonable proportion of the expenditure to be incurred. Following on this pronouncement, we should expect that the Government of Bengal will bear a similar proportion of the charges for the new bridge, *i.e.*, five lakhs of rupees From the Imperial Government we should also expect some contribution and we base our contention on this score on the ground that they are users of the bridge in respect of postal and military traffic As a further argument it might be observed that the Imperial Government derive a large amount of their revenues from the Port of Calcutta in the shape of Customs duties and should therefore make some contributions towards the construction of a bridge which will facilitate largely the trade that brings in this revenue

15 The financial effect of the various suggestions that we have outlined above we estimate as follows

| | Rs |
|---|---|
| Bridge tax on Calcutta and neighbouring municipalities | 6,00,000 |
| Bridge tax on Howrah | 1,00,000 |
| Levy on goods traffic by rail and river and boat at 1 pie per maund | 7,00,000 |
| Terminal tax on passengers by rail at 3 pies | 5,00,000 |
| Tax on passengers by sea at 8 annas | 1,00,000 |
| Tax for passengers by the Port Commissioners' Ferry Service | 1,20,000 |
| Tramway track rent | 50,000 |
| Contribution from the Government of Bengal | 5,00,000 |
| Contribution from the Imperial Government | 5,00,000 |
| Total | 31,70,000 |

In respect of taxation we consider the proposals, that we have suggested, to be practicable In the result their combined effect is to provide for the sum required to meet the necessary loan for the construction of the bridge

As regards maintenance, the charges will be small during the earlier years of the life of the bridge, and it may be expected that by the time the bridge is constructed the income from the varying sources above mentioned will suffice to meet not only the requirements of the loan, but also maintenance charges There is thus ample provision to meet both the cost of a cantilever bridge and its maintenance The proceeds of the contributions and cesses that we suggest will as time goes on, with the increase from the bridge tax that may be expected from the increased annual values of the municipalities, more than cover the annual necessary outlay, and it may therefore be unnecessary in future years to impose taxation to the full extent suggested Holding, however, as we do that the basic element in any scheme for financing this bridge should be through the medium of a bridge tax on the ratepayers of the various municipalities, we recommend, and on this point we lay strong emphasis, that this particular tax should be maintained at the fixed rate suggested, and that the relief that can be given should be in favour of the other sources of taxation—in particular, trade

16 In conclusion, we desire to pay a tribute to the assistance given us by Mr Purcell, the representative on this Committee of the East Indian

Railway. Mr Purcell died ,to our regret, before our deliberations were ended, but his services in the discussion of the various proposals and in the preparation of this report were invaluable

*The 30th June 1923*

JAMES DONALD
J. F BARTON
T EMERSON
R S COURTNEY
S A H SITWELL
D N GHOSH
F G ROBERTSON
OSWALD MARTIN
L GREENHAM
JOGENDRA KRISHNA ROY
JOHN COTTLE

I sign the report with an expression of regret that it should be considered necessary to impose a passenger tax on the Port Commissioners' Ferry Service which is maintained largely because other means of crossing the river, *e g* , by bridges are at present insufficient

S C STUART WILLIAMS

I sign this subject to my note of dissent

S N MALLIK

Signed subject to my note of dissent

JADU NATH ROY

Signed subject to my note of dissent

E J OAKLEY

Signed subject to my note of dissent

NORENDRA NATH ROY

Signed subject to my note of dissent

H St G GILMORE

Signed subject to my note of dissent

G. D BIRLA

Signed by me subject to my previous note with the additions now made, my note to be considered as my note of dissent

CHARU CHANDRA SINHA.

## NEW HOWRAH BRIDGE (FINANCE) COMMITTEE.

### Note by Mr. C. C. Sinha, M. A., B. L., Chairman, Howrah Municipality.

Under the terms of reference to the Committee, strictly speaking, I am precluded from considering the suitability or otherwise of the cantilever type of bridge as recommended by the Committee of Engineers, but it may be necessary with a view to solve the financial difficulty to consider whether a cheaper type of bridge might not do Recently a note was circulated by Sir Bradford Leslie suggesting the erection of twin bridges at a much lesser cost, and it has been shown by comparison with the cantilever type the advantages and disadvantages of the twin bridges Now that we are hard up to find finances for the cantilever type of bridge, and as Sir Bradford's scheme would be far less expensive, it may well be considered whether or not we should go in for the cheaper type . The principle enunciated in the draft report, that the basic element in any scheme of financing the bridge should be through the medium of a bridge tax on the ratepayers of the various municipalities, cannot be accepted, as the bridge will benefit trade and commercial interests in Howrah and Calcutta more than the ordinary ratepayers I think, therefore, that the interests most benefited, viz , trade, should pay for the bridge During the discussion many of the members pointed out that trade could not be further taxed, though the draft report assumes that it can be And if the bridge is to be constructed by putting undue pressure on trade, thereby affecting not only trade but also the public at large, I think that, not only in the interest of trade, but also in the interest of the general public, we should have a cheaper type of bridge, so that the trade and the general public may have to bear a far smaller amount of taxation than it would be necessary if we stick to the cantilever type

2 The draft report admits that the bridge between Howrah and Calcutta is a *necessity* to the commercial life of both cities, and as such the trading and commercial interests should be taxed in the first instance, and the basic principle should be, as I have already said, taxation on or contribution by the interests materially benefited

3 The people of Howrah, excepting the commercial classes, would not derive so great an advantage as to make them bear the heavy burden of an additional bridge-tax It might be pointed out that the cess on trade would fall to a large extent on Howrah and Calcutta, and I think that instead of levying a direct tax on the people of Howrah and Calcutta, which is surely to lead to discontent and consequent agitation, it would be better to increase the cess on goods traffic to one-and-a-half pies per maund, if not two pies per maund I may further point out here that the proposed tax on railway parcels and postal parcel will, to a certain extent, fall upon the people of Howrah and Calcutta, and there is also no guarantee, if the Tramway Company pays the track rent, that it would not increase the tramway fares Thus it would appear that the people of Howrah and Calcutta will have to pay indirectly a considerable amount for the bridge, and it would not be fair to levy a direct tax on the people of those towns

4 It is proposed to increase the terminal tax and thus to realize a certain amount through the railways I do not see why the Imperial Government should not contribute more than what has been proposed in the draft report The Imperial Government, I understand, derives from the Customs duties in Calcutta a revenue of several crores, and I should think that it should pay 10 lakhs a year for the bridge, which will improve the Port and facilitate largely the trade that brings in so much revenue, apart from the question of the use of the bridge for military and postal purposes I think from this point of view the bridge is an Imperial necessity.

5 Coming from the consideration of the general principles to a consideration of the particular case of Howrah, I am emphatically of opinion that no additional taxes should be levied on the people of Howrah on account of the bridge The people of Calcutta are deriving a benefit on account of a

portion of the terminal tax being set apart and utilized by the Calcutta Improvement Trust for the improvement of the town of Calcutta, while Howrah gets no portion of this for its improvement It is well known that many important schemes are being held up for want of funds, and it has been practically settled that the Improvement Trust will be introduced into Howrah, and at the conference held on the 2nd August 1922, under the presidency of the Hon'ble Minister in charge of the Local Self-Government Department there was a sort of a promise that some revenue might be obtained by increasing the terminal tax The proposed appropriation of the increase of the terminal tax for the bridge closes one of the principal sources for financing the Improvement Trust in Howrah, for I do not think that the railway companies or travelling public would agree to a further increase in the terminal tax for the Improvement Trust in Howrah As the Improvement Trust is going to be introduced into Howrah, and the ratepayers of Howrah have to be taxed for that purpose, and probably taxed higher than originally proposed, in the absence of any money from the terminal tax, the bridge-tax should not be imposed on them I might here point out that Howrah can fairly lay a claim to a portion of the terminal tax, as it is levied not only on the people who come to Calcutta but also on a considerable number of people who come to Howrah, and work here in the mills and factories Therefore practically by appropriating the whole of the increase in the terminal tax for the bridge, Howrah is being deprived of a portion of her dues in this respect, and as such Howrah may well claim exemption from the imposition of the bridge-tax Calcutta on this point stands on a separate footing because Calcutta is getting a portion of the terminal tax on account of the Improvement Trust, from which it would not be deprived because of the additional levy on account of the bridge Therefore Howrah's claim to be exempted from the bridge-tax is certainly better than that of Calcutta

6 So far as Howrah is concerned, leaving aside the question of civic amenities, which in these days of rise in prices may well be left out of account, at least so far as the majority of the people are concerned—who are ordinarily middle class people already burdened with a heavier rate of municipal taxation than that of Calcutta—the general public, except perhaps a portion of the people residing in the central part, would not be much benefited by the bridge as a means of communication between Howrah and Calcutta The bridge, if anything, is a great necessity for the various mills and factories and railways on this side of the river, and I do not see why these commercial firms and railways should not pay for the same

7 There will be a distinct disadvantage and loss of income to the Municipality, at least for many years to come, and loss of service to many of the residents of Howrah, after the bridge is constructed, as the fixed cantilever type of bridge without opening for ships will permanently prevent not only all possibilities of the expansion of the Port northwards, but also the existing dockyard would have to be closed on account of these disadvantages

8 The incidence of taxation in Howrah is considerably higher than that of Calcutta The amount of taxation varies from 24 per cent to 28½ per cent and the Commissioners of Howrah could not levy an educational cess, as they knew very well that the ratepayers of Howrah have to be taxed for the Improvement Trust It would be a great hardship on the people of Howrah when the rates will have to be increased for the improvement Trust, but as it is necessary to have an Improvement Trust, the people of Howrah will have to bear additional taxation on that account, and it would not be possible to burden them for any other purpose. As I have already stated, excepting the people in the central portion of Howrah, the people of the northern and southern portions have very few occasions to use the bridge for going to and coming from Calcutta, so general taxation on the whole population would be improper. I am quite sure that the people of Howrah are quite unable to bear any additional taxation for the construction and maintenance of the bridge. If the bridge is required for the people, and if the people cannot bear the expense of such a bridge, I should think that we

should rather abandon a bridge of such a costly type than tax the people to an extent which they cannot bear, and thus create discontent

9 Coming now to the figures as given in the draft report, even if we are to provide funds for the cantilever type, that can be done without levying an additional tax on the people of Howrah, and possibly also on those of Calcutta, as the following table will show —

| | Rs |
|---|---|
| (1) Levy on goods traffic by rail and river by boat at 1½ pies per maund | 12,37,000 |
| (2) Terminal tax on passengers by rail at 3 pies | 5,40,000 |
| (3) Tax on passengers by sea at 8 annas | 1,20,000 |
| (4) Tax on railway parcels at 1 anna per rupee | 3,50,000 |
| (5) Tax on postal parcels at 1 anna per rupee | 3,50,000 |
| (6) Contributions from the Government of Bengal | 5,00,000 |
| (7) Contributions from the Imperial Government | 10,00,000 |
| (8) Contributions from the Port Commissioners | 2,00,000 |
| Total | 43,47,000 |

We do not require so much as Rs 43,47,000 per year for the annual repayment and the cost of maintenance Rupees 37,00,000 per year is all that is required Even if we reduce the Imperial Government's grant by 5 lakhs, a sufficient fund can be provided for the annual repayment and the cost of maintenance without levying an additional tax on the people of Howrah or Calcutta for that purpose

It now appears that we require only Rs 31,70,000 So in the figures given in my note, dated the 16th May 1923, which may be regarded as my note of dissent, some modifications might be made without unduly taxing the goods traffic and I would, therefore, suggest that if the levy on goods traffic be at the rate of 1 pie only and also if the cess on parcel be omitted, then even, provided the Imperial Government pays about 8 lakhs we might meet the cost of such a bridge without taxing the people of Calcutta and Howrah I am still of opinion that we should go in for a less costlier type of bridge

## Note of dissent by Mr. E. J. Oakley.

As requested by the Chairman of the Howrah Bridge Committee at the meeting, held on 8th May, to consider the draft report to be submitted to Government, I submit herewith a note of dissent from the general recommendations embodied therein

First, I would say that I do not for a moment dispute the urgent necessity for a new bridge connecting Calcutta with Howrah - that is an obvious fact that admits of no dispute. What I wish to urge is that the present time of financial stringency and trade depression throughout the world is a particularly inappropriate one to launch out into enormous and largely unknown capital expenditure which, if the method of finance proposed is adopted, must of necessity impose an additional burden on the trade of the port for the next 60 years

I object entirely to the principle of the method suggested for providing "service" for the loan or loans that will be required for what is, after all, a purely "civic" necessity, by an impost on trade, whereby an added burden is placed upon commodities from which a very large portion of Imperial and Provincial revenues is already derived, in the form of import duties and other forms of direct and indirect taxation

In addition to such taxation the trade of the port has already to bear the normal port charges and it is interesting to study the steady and alarming increase in such charges since pre-war days The following figures were given during the course of the Committee's deliberations, and are eloquent :—

*Calcutta Port Commissioners' Charges*

| Year | Amount per ton |
|---|---|
| | As |
| 1913 14 | 9 9 |
| 1914-15 | 10 9 |
| 1916-17 | 14 1 |
| 1917 18 | 14 7 |
| 1918-19 | 17 9 |
| 1919 20 | 20 3 |
| 1920 21 | 22 5 |
| 1921 22 | 27 22 |
| 1922-23 | 23 1 |

The abnormally high figure for 1921-22 was due to special non-recurring causes, but eliminating these, it would have been reduced to, say, 22 0 annas, or approximately the same as the previous year

The above figures speak for themselves and it is common knowledge that millions are being spent on new docks and general improvement of port facilities, all of which will have to be paid for. It is reasonable therefore to assume that these charges are at any rate more likely to increase than decrease

The proposed impost of an additional one pie per maund may not appear a very large sum, but, owing to the grave difficulties in collection that are certain to arise in the case of boat traffic, it is very doubtful whether, if imposed, the tax will produce anything like the sum anticipated, and then, what is more likely than that, another pie will be added to the tax to make up the deficit

A further grave injustice arising out of a tax of this nature on goods came to light as a result of the special cargo surcharge imposed as a war measure, apart from the particularly unfair and objectionable one of imposing the duties of tax collectors upon private carrying companies. This was the fact that in many cases, owing to a competitive route being available, any increase on rates equivalent to the tax was impossible, with the result that the tax fell upon, and had perforce to be paid by, the carrying companies themselves

To give a specific instance, the whole of the very large traffic from Eastern Bengal, Cachar and Sylhet, and Assam, brought into Calcutta by the vessels of the inland steamer companies for export would be liable for this tax, whereas

goods from these districts carried to Chittagong by the Assam-Bengal Railway competitive route would be free This would be, in effect, a direct subsidy paid by the trade of Calcutta to the port of Chittagong, its keenest competitor for the important jute and tea export trade!

The only way to avoid this would be for the rates to be kept as at present, and the tax to be paid by the unfortunate carrying companies themselves, as was forced upon them in many instances in connection with the war surcharge on cargo referred to above.

To my mind the question of financing the proposed bridge is one solely for the three parties who are those principally interested, namely, the Corporation of Calcutta and the surrounding Municipalities, the Government of Bengal, and the Imperial Government

Primarily the Calcutta Corporation and the Howrah Municipality are the two most concerned, and undoubtedly the correct method of financing the new bridge would be for these two bodies, to raise the necessary funds, the "service" for which would fall upon the rates It can, however, quite logically be argued, in fact it has been so argued in Committee, that the Imperial Government, which derives so large a portion of its revenues through the Port of Calcutta, and the Government of Bengal, of which Government Calcutta is the capital, should equally share in the necessary burden

If the burden be equally divided a simple sum shows that the required amount can be provided as follows :—

| | Rs |
|---|---|
| Corporation of Calcutta and surrounding municipalities | 11,00,000 (equals 2 per cent addition to the rates) |
| Government of Bengal | 9,00,000 |
| Government of India | 9,00,000 |
| Annual "service" required | 32,00,000 |

Or if the other sources of revenue recommended by the Committee, excluding goods, are taken into account, the proportions would be as follows —

| | Rs |
|---|---|
| Passenger terminal tax | 5,00,000 |
| Passengers by sea tax | 1,00,000 |
| Port Commissioner's ferry service | 1,20,000 |
| Tramway tract rent | 50,000 |
| 2 per cent on Calcutta and Howrah rates | 14,00,000 |
| Government of India | 5,00,000 |
| Government of Bengal | 5,50,000 |
| TOTAL | 31,70,000 |

We have been eloquently told by the civic representatives on the Committee, however, that it is, "impossible" for them to provide anything, and that the rates are already as high as they can go in view of the heavy expenditure on improved water supply, sanitation, etc, with which they are faced

I do not think, however, that an extra 2 per cent on the rates can be considered as very excessive in return for the general improvement in rateable values that is bound ultimately to follow improved communications

It is not improbable that the two Governments concerned will join in the almost universal chorus of *non possumus*, in respect to their suggested contributions, that has characterised the meetings of the Committee throughout

The inevitable conclusion that has been forced upon me, and I gather a considerable proportion of the other members of this Committee, is a definite one, namely, that at present time, and probably for many years to come, Calcutta cannot afford a cantilever bridge of the size and cost of that proposed, and I subscribe unhesitatingly to such conclusion

What is the alternative? To my mind it is a simple one, namely to cut our coat according to our cloth, and replace the present bridge with another similar one Although this is, strictly speaking, outside the terms of reference, I venture to submit such alternative as worthy of the fullest consideration.

A floating bridge capable of carrying all the traffic that is likely to arise during the next 25 to 30 years can be provided, we are told, for some £1,600 000 against £[illegible]000,000, the "estimated" cost of the cantilever one This being so, the annual service required would amount to some Rs. 13,00,000 at 5 per cent as against Rs 36,00,000 for the cantilever bridge. Proceeding on the former lines this "service" could be easily met as follows:—

| | Rs | |
|---|---|---|
| Calcutta and Howrah Corporations | 7,00,000 | (1 per cent only on present rates) |
| Government of Bengal | 3,00,000 | |
| Government of India | 3,00,000 | |
| TOTAL | 13,00,000 | |

If, however, the recommendations of the Committee as regards a tax on passengers were given effect to, but excluding goods, the problem becomes a still more simple one, namely,—

| | Rs |
|---|---|
| Tax on passengers by rail | 5,00,000 |
| Tax on passengers by sea | 1,00,000 |
| Tax on Port Commissioners' ferry service | 1,20,000 |
| Tramway tract rent | 50,000 |
| Contribution from Government of India | 3,00,000 |
| Contribution from Government of Bengal | 2,30,000 |
| TOTAL | 13,00,000 |

or sufficient without increasing Municipal rates

I do not object to a passenger tax in principle, for the simple fact that the person interested is in a position to protect himself to a certain extent by not travelling, or reducing his travelling to the point at which the tax does not particularly hurt him

Whether this applies however to the short distance ferry trafic run by the Port Commissioners is very doubtful and I would be in favour of eliminating this source altogether and making up the required amount by increased contributions from the Local and Imperial Governments

The case of goods traffic is very different, it is the commercial life blood of the community, and anything in the nature of an arbitrary tax, over and above the actual cost of carriage, and a reasonable profit to the carrier, is an extremely dangerous expedient, with results that cannot be forseen or foretold

## Note of dissent by Mr. S. N. Mallik, Officiating Chairman, Corporation of Calcutta.

The Committee have stated in their draft report that the new bridge is primarily a civic amenity, indeed a necessity, and that the liability for it should rest in the first instance on the people of Calcutta and its neighbourhood In the opinion of the Committee a levy on rateable value in Calcutta and Howrah should form the basic element I altogether dissent from this view A new bridge between Calcutta and Howrah will serve not merely the people and trade of Calcutta and its neighbourhood, but also the thousands of people from outside who daily swarm into the city to enjoy its amenities, and profit by the opportunities it affords, it will also serve the enormous trade and commercial interests which radiate from Calcutta In fact, its benefit to trade and commerce will far transcend the limits of the city or the province and I maintain that the new bridge is not merely a local necessity but is a provincial and an imperial concern No scheme of finance which does not recognize this cardinal fact will ensure a just and equitable incident, and the proposals of the Committee are, in my opinion, vitiated by their initial mistake of regarding the bridge only in the nature of a local improvement

2 An annual sum of Rs 35 lakhs will be required to pay the interest and sinking fund charges on account of the new bridge, but the Committee's proposals however aim at raising an annual revenue of Rs 41½ lakhs, of which about Rs 20¾ lakhs or 50 per cent will have to be contributed directly or indirectly by the people of Calcutta in some shape or other—Rs 10¾ lakhs will be contributed by the people outside, Rs 5 lakhs by the Government of India note below how the figure of Rs 20¾ lakhs to be contributed by the people of Calcutta is arrived at The proposed levy of 1 per cent on rateable value is a direct tax on property in Calcutta and is expected to yield Rs 6 lakhs The levy on goods traffic by rail, river, and boat is expected to yield Rs 8¼ lakhs, but about three-fourths of this will probably be in respect of goods intended for the people of Calcutta who will therefore be practically paying about Rs 6¾ lakhs The tax on coal consumed locally (viz , Rs 3,20,000) is a direct contribution by the people of Calcutta It may be taken that one-fourth of the terminal tax (Rs 5,40,000) and half the tax on parcels (Rs 7 lakhs) will be paid by the people of Calcutta Although the revenue will be raised under various heads, it should be noted that it will come out of the same pocket If it is held that the provision of a new bridge is an urgent local improvement, then I submit that the ratepayers of Calcutta who now contribute 2 per cent to the Calcutta Improvement Trust should be allowed to reduce it by half the 1 per cent thus set free being utilized for financing the bridge It would be grossly unfair to realize 2 per cent from them towards local improvements which the Trusts are carrying out and still further tax them for other local needs

3 I cannot too strongly emphasize the fact that the present resources of the Corporation are barely sufficient to meet the needs of a growing municipality, and that the unutilized margin of taxation amounting to 3½ per cent of the rateable valuation will have to be drawn upon within the next few years to finance the scheme for the improvement of water-supply and the provision of a new drainage outfall The Corporation have recently undertaken the responsibility for the improvement of primary education in Calcutta and may eventually have to levy an educational cess The scheme for a City Veterinary Department has been approved, but has had to be kept in abeyance for want of funds along with several other projects of improvement The municipalities of Cossipore-Chitpur, Maniktala, and Garden Reach have all been added to Calcutta and the Corporation will have to incur an expenditure of over a crore for their improvement The people of Calcutta would probably never have acquiesced in the amalgamation if they had known that besides an increase of municipal taxation, they might have to pay a bridge cess, or bear other extraneous burdens. I am decidedly of opinion that the capacity of the ratepayers and the public generally of Calcutta will be taxed to the utmost during the next few years for ordinary municipal requirements, and that the imposition of any further serious burden on them cannot be thought of In any case, I do not

consider that the proposals of the Committee secure a just and equitable incidence While the people of Calcutta will be required to pay 50 per cent. of the annual cost, the Government of India who derive Rs 17 crores a year from Customs revenue from Calcutta will pay only Rs 5 lakhs which, in my opinion, is too small a proportion I would suggest that it should be at least Rs. 10 lakhs a year I made this suggestion in the Committee with the result that the Committee put down Rs 5 lakhs which sum, in my opinion, very inadequately represents the Government of India's interest in the project.

4 The Port Commissioners should also contribute a substantial sum as the new bridge will afford greater facilities for the river traffic, and the cost of upkeep will be substantially reduced Besides, a great deal of the trouble in connection with the design and type of the new bridge has arisen owing to the requirements of the Port Commissioners who are more vitally interested in the matter than anybody else, and it seems anomalous that they should contribute nothing At an early stage of our deliberations the Committee thought that they should pay Rs 2 lakhs and I would retain this figure

5 If a satisfactory scheme of finance to meet the annual cost cannot be devised without imposing a disproportionate burden on the ratepayers and citizens of Calcutta, then I fear the idea of a cantilever bridge will have to be abandoned as being beyond available means and resources It is true that this type was recommended by an Expert Committee of Engineers, but when the Committee examined the matter, the estimate for a cantilever bridge amounted to Rs 3 crores as against Rs 247½ lakhs for Sir Bradford Leslie's twin bridges of the floating type, the figures in either case being exclusive of the cost of land and compensation The present estimate for a cantilever bridge amounts to Rs 638 lakhs including cost of land and compensation and it is by no means certain that the Committee, if they had the revised figure before them, would still have recommended this type, irrespective of all financial considerations In view of the enormous difference in cost between the two types and our obvious inability to finance the cantilever bridge, I think that the question of the type of bridge should again be examined in the light of the present estimate My own opinion is that a cantilever bridge is much too costly for us and we cannot afford it, whatever may be its advantages from the traffic and the æsthetic points of view, and we should adopt a cheaper alternative It should be remembered that the present bridge was erected in 1873-74 at a cost of about Rs 27 lakhs, and in spite of all its drawbacks it has stood well for about 50 years I venture to suggest that independent evidence be obtained in regard to the condition of the present bridge and the possibility of prolonging its life for a reasonable period by such repairs and improvements as may be found necessary. In the present condition of the money market, it will be a substantial gain if the expenditure on a new bridge can be deferred until conditions become easier.

## Joint Note of Dissent by Babus Jadu Nath Roy and Norendra Nath Roy, Members, New Howrah Bridge (Finance) Committee.

The cost of the new bridge of the cantilever type and the expenditure involved for the acquisition of land, the construction of approaches and compensation to be paid to interests adversely affected by a permanently closed bridge, will amount to about six-and-a-half crores of rupees. The cost of the present bridge, which gave us very good service for over forty years, was only about twenty-two lakhs of rupees It can be expected that a suitable bridge of the floating type, built to meet present-day requirements, and having arrangements for occasional openings to allow vessels to pass, can be built at a cost not exceeding two-and-a-half crores As this bridge can be built on the old site, it will not be necessary to go into additional expense for new approaches, nor will it be necessary to pay heavy compensation to any interest adversely affected, as there will be arrangements for opening the bridge occasionally to allow vessels to pass

To finance a bridge of the cantilever type, costing about six-and-a-half crores of rupees, all sorts of impositions have been sought, including a separate tax on the taxpayers of Calcutta and its neighbourhood, and this will mean one per cent added to the existing high municipal rates Boat and steamer traffic, which will not be in any way benefited by the proposed bridge, will also be taxed

The cost of a cantilever bridge has been taken to be about six crores and a-half But as it is proposed to raise Rs 11,55,000, the cost seems to be nearer eight crores and-a-half than six

In our opinion Calcutta has not the ability to pay for such an expensive bridge of the cantilever type, and a bridge of less expensive type like the present floating bridge should be adhered to

With that view, tenders should, without loss of time, be invited from reliable firms in Great Britain, the Continent and America

## Note of dissent by Mr. H. St. G. Gilmore, Traffic Manager, Eastern Bengal Railway.

It appears to me that at the present time of financial stringency and trade depression, and when many other works of public utility are being provided or projected, a bridge costing Rs 6,38,00,000 is beyond the means of Calcutta and its neighbourhood to provide, and I would suggest that the question of providing a cheaper bridge be given further consideration

2. The suggestion outlined by the Committee for meeting the cost of the bridge are such that liability to pay the tax would fall on the same person several times over which does not appear to be fair.

3. I am strongly opposed to goods traffic, parcels and passengers carried by Railways running into Calcutta (as opposed to those running into Howrah) being called upon to contribute towards the cost of the bridge The proposed taxing of goods and passengers to and from stations on the Howrah side is designed to take the place of a bridge toll and is, therefore, on an altogether different footing to the proposed taxation of goods and passengers carried to and from stations on the Calcutta side Moreover, as the Port of Chittagong is in competition with the Port of Calcutta, a Railway, such as the Eastern Bengal Railway, having its termini in Calcutta, would be at a disadvantage when competing with the Assam-Bengal Railway route if traffic to and from Calcutta were taxed, while traffic to and from Chittagong remained free, and would doubtless, in some cases, have to pay the bridge tax from its own revenue

4 The Eastern Bengal Railway net revenue (after deducting working expenses) does not provide an adequate return on its capital cost Any additional revenue that can be raised on the traffic of the Railway is accordingly needed to raise the return on capital and to help to provide funds for the many additions and improvements necessary I would add that particularly in the case of passengers the rates at present charged are as high as the traffic can bear

5 I am, therefore, of opinion that such sum as may be required for financing the bridge should be obtained from the following sources —

(*i*) Corporations of Calcutta and Howrah,

(*ii*) Goods and passenger traffic to and from Howrah stations—in lieu of bridge toll,

(*iii*) Tramway track-rent,

(*iv*) Government of Bengal, and

(*v*) Government of India

## REPORT OF THE NEW HOWRAH BRIDGE (FINANCE) COMMITTEE.

### Note of dissent by Mr. G. D. Birla.

I regret that I cannot quite agree with my colleagues who have signed the main report.

I confess that I am not competent to give a considered opinion on the technical question of the particular type of bridge required between Howrah and Calcutta in place of the existing one It has, however, to be borne in mind that the general body of ratepayers of Calcutta are against the proposal to construct a bridge at a cost of about 6½ crores of rupees It may be that a cantilever bridge is the best suited to Calcutta from a purely engineering point of view, but the opinion of engineers ought not to be the deciding factor in arriving at a proper conclusion in a matter entailing such a huge expenditure.

The most important question for consideration in the matter, undoubtedly, is how to finance the scheme of a new bridge In these hard days when business is so depressed, when very considerable distress prevails all over the province among the middle classes due to unemployment, when Government is pledged to a policy of economy and retrenchment, and when there have been such insistent demands for the provision of funds in so many useful directions for the benefit of the people, it will not be anything short of a wasteful luxury if such a huge amount as 6½ crores of rupees is devoted to the construction of the proposed bridge I believe that this heavy expenditure would be an unnecessary burden on the people concerned It appears to me, therefore, that if a bridge of the cantilever type cannot be built for a sum less than this, the proposal should be abandoned altogether as one beyond the reach of practical means In a matter like the one under consideration, especially at a time like the present, the principle of cutting the coat according to the cloth you have, ought to be strictly adhered to

I do not, of course, ignore the fact that Calcutta requires a new bridge urgently If the present bridge is to be replaced by a new one, the latter should be a structure of a decent and enduring nature, and be worthy of this great city I think, however, that this need of Calcutta ought to be met at a smaller cost than that estimated for the proposed cantilever bridge If it is found possible to get such a bridge at a reasonable cost, we may have it It might be, that if fresh estimates are made, it would be found possible to build a bridge of this type at a smaller cost than that estimated for What appears to me objectionable is not the nature of the structure but its heavy cost, which is out of all proportion to the means of those who will be called upon to finance it.

The Committee of Engineers in their report estimated the cost of construction of the main structure of the bridge at about 2 million pounds sterling Why this estimate has been raised since then to 2¾ millions I do not quite see The report of the Committee of Engineers was drawn up in February 1922, and so far as my business experience goes the price of every material has fallen since then In certain types of iron work prices have fallen even by 20 per cent to 30 per cent I am inclined, therefore, to the conclusion that the present cost of the main structure of a cantilever bridge may be brought down to a much lower figure than that estimated by the Committee of Engineers

The most outstanding instance of over-estimation may, it appears to me, be found in the items under the heads, which deal with the "Valuation of land and structures" and the "Compensation claimed by various Docking Companies" The signatories to the main report also "feel justified" "in assuming that these claims will not be fully entertained and that a considerable reduction is possible."

There remains no doubt, therefore, that the estimates may be reconsidered with some advantage From the information available to me about the nature and extent of the interests of the various Docking Companies to be affected by the construction of the proposed cantilever bridge, I am inclined to believe that these claims are exaggerated I think it my duty, therefore, to point out in emphatic terms that no concern or interest ought to be allowed to take undue advantage of the building of a new bridge between Calcutta and Howrah.

I believe that, if proper care is exercised and a strict investigation made, there are great possibilities of large reductions being effected in the cost of the new bridge, even if it be of a cantilever type I feel gratified to find that my colleagues, who have signed the main report, have, on a second consideration, agreed to reduce the annual yield of taxation from over 38 lakhs of rupees to below 32 lakhs of rupees as suggested by me But still our difference arises out of the fact that they do not suggest any solution as to what has to be done if it is not found possible to build a bridge of the cantilever type with the funds available under their recommendations I desire to make it clear that if it is not found possible to build such a bridge at a reasonable cost, the idea of such a bridge should be dropped as a proposition not within the bounds of practical finance

I regret I cannot quite agree with them as to the principle on which taxation has been recommended The report after discussing various proposals for raising money states in paragraph 4 as follows —

> " Agreeing as we do that the bridge is required for Calcutta as a whole, we consider that it is primarily a civic necessity, and as such should ordinarily be a charge on the population generally in accordance with recognised methods by which municipal activities are financed—in other words, a charge on the ratepayers We realise that it would not be possible at the present time to impose a charge of this magnitude on the ratepayers of Calcutta and neighbouring municipalities, but we consider that a levy framed on the rateable value of these municipalities should form the basic element in making up the amount required to meet the charges on account of the bridge "

The report further states at the end of paragraph 15 :—

> " The proceeds of the contributions and cesses that we suggest will as time goes on, with the increase from the bridge tax that may be expected from the increased annual values of the municipalities more than cover the annual necessary outlay, and it may therefore be unnecessary in future years to impose taxation to the full extent suggested Holding, however, as we do that the basic element in any scheme for financing this bridge should be through the medium of a bridge tax on the ratepayers of the various municipalities, we recommend, and on this point we lay strong emphasis, that this particular tax should be maintained at the fixed rate suggested, and that the relief that can be given should be in favour of the other sources of taxation—in particular, trade "

I am unable to subscribe to the dictum laid down by my colleagues. I admit that the proposed bridge would be of benefit to all classes of people in Calcutta and Howrah But the people of these two cities are not the only parties to be benefited by it. The bridge would bestow immense advantage on the trade and commerce not only of Bengal but also of the adjoining provinces. This is a matter which cannot be ignored Further, under the scheme proposed by my colleagues, Calcutta has been asked to pay directly and indirectly in the following ways :—

(*a*) levy on goods traffic;
(*b*) terminal tax on passengers by rail;
(*c*) tax on passengers by sea;

(d) tax for passengers by the Port Commissioners' Ferry Service,
(e) tramway track rent,
(f) contribution from the Government of Bengal

I do not find any justification, therefore, in taxing the ratepayers of Calcutta and the neighbouring municipalities over and above these The argument used in the report that " a new bridge between Calcutta and Howrah is a matter of no less urgency than any of the municipal schemes now in contemplation and there is in our opinion no getting out of the fact that the liability for the new bridge whether it be of the cantilever or any cheaper type, should rest in the first instance on the people of Calcutta and its neighbourhood " is wholly gratuitous, inasmuch as the people of Calcutta and its neighbourhood will have to pay in various ways under the scheme proposed by my colleagues as indicated above even if no levy on the rateable value of Calcutta and Howrah is made

The principle recommended in the report involves a very wrong policy If this is adopted, it would paralyse the municipalities concerned to extend their activities in many beneficent directions for a very long time to come These bodies are expected to undertake a lot of fresh responsibilities in the near future, such as new schemes for adequate supply of pure drinking water, the provision of new drainage schemes, the improvement of primary education and sanitation, the development of the added areas, etc, etc The question as to whence from the Calcutta Corporation will find the money required for carrying out all these objects has not, I am afraid, received sufficient consideration from the authors of the report The Corporation of Calcutta is, perhaps the most important among the self-governing institutions in the province, and any scheme which is likely to hamper and obstruct its legitimate activities, cannot have the support of right minded persons Under the circumstances, I strongly oppose the proposal of imposing an additional burden on the municipal rates

I am sorry that I feel compelled at this stage to advert to the original proposals of my colleagues as regards ways and means, which are given below

| | Rs. |
|---|---|
| Bridge tax on Calcutta and neighbouring municipalities | 6,00,000 |
| Bridge tax on Howrah | 1,00,000 |
| Levy on goods traffic by rail and river and boat at 1 pie per maund | 7 30 000 |
| Terminal tax on passengers by rail at 3 pies | 5,40,000 |
| Tax on passengers by sea at 8 annas | 1,20,000 |
| Tax on railway parcels at 1 anna per rupee | 3,50,000 |
| Tax on postal parcels at 1 anna per rupee | 3,50,000 |
| Tramway track rent | 50,000 |
| Contribution from the Government of Bengal | 5,00,000 |
| Contribution from the Imperial Government | 5,00,000 |
| Total | 38,40,000 |

It would thus be seen that my colleagues originally recommended a scheme of taxation which would have yielded a sum of Rs 38,40,000, but on second consideration they have changed it in such a way as to yield a sum of Rs 31,70,000 only . I am sorry that although they have agreed to my suggestion by reducing the amount from Rs 38 40,000 to Rs 31,70,000, they have still retained their proposal to tax the municipalities If from the original scheme of taxation the municipalities concerned are excluded, and the other items are retained, there would be a reduction in the yield of taxation from Rs 38,40,000 to Rs 31,40,000 It appears to me that the Indian public would much prefer the original scheme of taxation so amended to the revised scheme I would, therefore, recommend the adoption of the original scheme which, after omitting the first two items amounting to Rs 7 lakhs, would yield Rs 31,40,000 In my opinion, this amount should be enough for the purpose for which it is required

I may, however, point out that in making the above suggestions I have followed as closely as possible the channels of taxation recommended by my colleagues, although I am not quite convinced that there are not others which would not only be less objectionable, but be conducive to the best interests of the country For example, I may mention the levying of a percentage on the freight earned by non-Indian steamers entering and leaving the port of Calcutta I believe that if ¼ per cent of such freight be collected as Bridge Tax it will yield not less than 5 lakhs of rupees per annum I think that if any of the items be not satisfactory, the contribution from either the Government of Bengal or the Imperial Government should be increased, or the Port Commissioners be asked to make a contribution, or a percentage be levied on the freight earned by non-Indian steamers I desire to make it clear, however, that in no case should the amount to be raised exceed 31½ lakhs of rupees per annum for a period of sixty years

**RESOLUTION ON THE BUDGET ESTIMATE OF INCOME AND EXPENDITURE OF THE HOWRAH BRIDGE FOR THE YEAR 1923-24.**

## GOVERNMENT OF BENGAL,

### MARINE DEPARTMENT.

CALCUTTA, THE 20TH JULY 192[illegible]

RESOLUTION—No 2457 Marine

READ—

The budget estimate of Income and Expenditure of the Howrah Bridge for the year 1923-24.

**Receipts.**—The estimate of receipts for the year is placed at Rs. 4,37,402, reproducing the revised estimate for 1922 23 The receipts from the East Indian Railway traffic for the year are estimated at Rs. 3,25,000, the amount shown in the revised estimate for 1922-23, against the budget estimate of Rs 2,75,000 for that year.

**Expenditure.**—The estimate of total expenditure for the year is Rs. 3,95,819, which is Rs 32,000 less than the revised estimate for the preceding year The estimate shows appreciable decrease in expenditure under the heads "Stores" and "Maintenance and Repairs"

2. Against a debit balance of Rs. 48,981 shown in the budget estimate for 1922-23 a surplus of Rs 9,580 is shown in the revised estimate and as a consequence the estimated debt of the bridge to the Port Commissioners at the end of 1922-23 is reduced after necessary adjustments from Rs. 5,33,523 to Rs. 4,98,184

The Governor in Council notes with satisfaction this improvement in the financial position of the Bridge

Resolved that the budget estimates for 1923-24 be approved under section 21 of the Howrah Bridge Act, 1871

By order of the Governor in Council,

A MARR,

*Secretary to the Government of Bengal.*

## MONTHLY WEATHER AND CROP REPORT OF BENGAL FOR JUNE 1923.

I **Character of the season.**—Excepting Dinajpur, Jalpaiguri, Malda, Mymensingh, Chittagong, the Chittagong Hill Tracts and the Tripura State, the rainfall during the month under review was much below the normal especially in the western districts The usual rainfall statement is appended

II. **Progress of agricultural operations.**—The transplantation of winter paddy seedlings proceeded under favourable conditions in East and North Bengal, while in West Bengal the operation was seriously retarded for want of sufficient rain Harvesting of autumn paddy and jute has commenced in the Eastern Bengal districts towards the end of the month

III **State of standing crops.**—The condition of sugarcane, autumn paddy, jute and other standing crops was reported to be fair except in West Bengal where the growth was greatly affected by want of sufficient rain

IV **Prospects and probable outturn.**—The prospects of autumn and deep-water paddy and other standing crops were reported to be satisfactory in East and North Bengal, while in West Bengal the outlook is not promising

V. **Damage to standing crops.**—No damage to the standing crops was reported from any part of the province.

VI **Condition of agricultural stock.** The condition of live-stock was on the whole fair Stray cases of cattle-disease were, however, reported from parts of Nadia, Jessore, Khulna, Burdwan, Midnapore, Dinajpur, Darjeeling, Rangpur, Cooch-Behar, Dacca, Bakarganj, Tippera and Noakhali

VII **Failure of pasturage and fodder.**—No scarcity of fodder and water was reported from any part of the province

VIII **Prices of food-grains.**—During the second-half of the month the price of common rice of the cheapest quality rose in 7 districts, fell in 5 and remained stationary in the rest of the province The price varied from 6 seers 8 chittaks per rupee at Darjeeling to 9 seers per rupee at Dinajpur.

IX **Condition of agricultural people.**—The condition of agricultural population was reported to be fair. The test relief works in the flood affected parts of Rajshahi were closed by the middle of the month

R. S FINLOW,
*Director of Agriculture, Bengal (offg.)*

DACCA, *the 20th July 1923*

### *Statement showing the normal and actual rainfall in each district during June 1923.*

| Division | District | Normal district rainfall for the month of June | Actual district rainfall for the month of June 1923 | Variation from the normal |
|---|---|---|---|---|
| | | Inches | Inches | Inches. |
| Presidency | 24 Parganas | 11 24 | 7 85 | −3 38 |
| | Calcutta | 11 61 | 5 37 | −6 26 |
| | Nadia | 9 85 | 4 79 | 5 06 |
| | Murshidabad | 10 48 | 5 89 | −4 59 |
| | Jessore | 11 84 | 9 30 | −2 54 |
| | Khulna | 12 83 | 9 11 | −3 69 |
| Burdwan | Burdwan | 10 72 | 4·73 | −5 99 |
| | Birbhum | 10 42 | 3·61 | −6·81 |
| | Bankura | 9 75 | 6 54 | −3 21 |
| | Midnapore | 11·25 | 5 98 | −5·27 |
| | Hooghly | 9 93 | 3 96 | −5 97 |
| | Howrah | 11 18 | 7 35 | 3 83 |
| Rajshahi | Rajshahi | 11 06 | 8 30 | −2·76 |
| | Dinajpur | 11 85 | 17·82 | +2 97 |
| | Jalpaiguri | 27 08 | 27 54 | +0 46 |
| | Darjeeling | 23 41 | 22 36 | 1 05 |
| Rajshahi—*concld* | Rangpur | 18 96 | 16 11 | −0·85 |
| | Bogra | 12 73 | 8 42 | −4·31 |
| | Pabna | 11 57 | 7·52 | −4·05 |
| | Malda | 10 54 | 10 99 | +0 45 |
| Dacca | Dacca | 14·43 | 10 87 | −3 56 |
| | Mymensingh | 17·80 | 18 36 | +0 56 |
| | Faridpur | 15·03 | 7·06 | −7 97 |
| | Bakarganj | 18 18 | 13·97 | −4·21 |
| Chittagong | Chittagong | 22 52 | 26·56 | +4·04 |
| | Tippera | 16 05 | 14 79 | −1 26 |
| | Noakhali | 21 18 | 17·21 | −3·97 |
| | Chittagong Hill Tracts | 18 11 | 21 32 | +3 21 |
| | Cooch Behar | 27 80 | 18·86 | −8 74 |
| | Tripura State | 15·47 | 18·77 | +3,30 |

## DISTRICT REPORTS ON WEATHER AND CROPS

**For the week ending on the 18th July 1923.**

**Summary.**—The rainfall during the week was very heavy in parts of North Bengal; elsewhere the all was much below the normal. More rain is urgently needed throughout the Province for the transplantation of winter paddy seedlings and for the growth of the standing crops except in some North Bengal districts where the standing crops have been materially damaged by continuous and heavy ainfall. Cutting and steeping of lowland jute and reaping of autumn paddy are proceeding satisfactorily n East and North Bengal. The average price of common rice for the Province has slightly fallen as ompared with that of the previous week.

| Serial No. | District and subdivision. | Rainfall. | Price of common rice, in seers, per rupee | | Character of the weather, condition of crops, etc |
|---|---|---|---|---|---|
| | | | This week | Previous week | |
| 1 | 2 | 3 | 4 | 5 | 6 |
| | | Inches. | | | |
| 1 | 24-PARGANAS ... | 0·50 | 6¼ | 6¼ | Effects of weather on crops are good. Fodder and water are sufficient. Condition and prospects of jute are good, except in Basirhat and Diamond Harbour subdivisions where late rain has retarded the growth Basirhat reports two annas damage due to insect-pests. |
| | Diamond Harbour. | 0·58 | 8 | $7\frac{5}{16}$ | |
| | Barrackpore ... | 2·00 | $6\frac{5}{8}$ | $6\frac{5}{8}$ | |
| | Barasat ... | 0·20 | $7\frac{5}{16}$ | $7\frac{5}{16}$ | |
| | Basirhat ... | 1·60 | $7\frac{5}{16}$ | 7⅛ | |
| 2 | NADIA ... | 1·76 | $7\frac{7}{16}$ | $7\frac{1}{16}$ | Weeding of autumn paddy continues and the growth of jute and *aman* paddy retarded for want of rain Damage to jute by insect-pests has been reported from Meherpur, Sadar and Chuadanga subdivisions. |
| | Kushtia ... | 0·27 | 7½ | 7½ | |
| | Meherpur ... | 1·12 | 6¾ | 6¾ | |
| | Chuadanga ... | 1·73 | 7¼ | 7¼ | |
| | Ranaghat ... | (*n*) | (*n*) | 6½ | |
| 3 | MURSHIDABAD | 4·89 | 8 | 7½ | Weather occasionally cloudy and windy. Prospects of *bhadoi* crops are fair. Rain is badly needed for the transplantation of *aman* paddy Condition and prospects of jute are fair in Lalbagh, good in Kandi, but not good in Jangipur. Slight damage has been done to jute by insect-pests in Jangipur. Weeding continues Cattle-disease is reported from Gokarna thana in Kandi and Mirzapur in Jangipur. Fodder is sufficient. |
| | Lalbagh ... | 3·69 | 8 | 8 | |
| | Jangipur ... | 0·49 | 9 | 9 | |
| | Kandi ... | 3·44 | 9 | 9 | |
| 4 | JESSORE | 0·32 | 7½ | 7½ | Ploughing for and weeding of jute and *aus* paddy crops continue. Standing crops are suffering for want of rain Jute crop is progressing; the growth was retarded for want of rain in the early period but is now satisfactory. Slight damage has been caused by drought and insect-pests Cattle-disease is reported from Bongaon and Moheshpur thanas Fodder and water are sufficient. |
| | Jhenidah ... | 2·02 | 8 | 8 | |
| | Magura ... | 0·27 | 7¼ | 7¼ | |
| | Narail ... | 2·11 | 7 | 7 | |
| | Bongaon ... | 1·46 | 7 | 8 | |
| 5 | KHULNA ... | 0·88 | 7½ | 7½ | Weather seasonable. Cultivation of *aman* paddy continues. Condition and prospects of jute are not favourable. The effects of weather on the growth of jute are not favourable; some damage to the crop by insects is reported from Tala thana. Harvesting has not commenced. Fodder and water are sufficient. Cattle-disease is reported from Morrelganj thana. |
| | Satkhira ... | 0·69 | 8 | 8 | |
| | Bagerhat ... | 0·57 | 8 | 8 | |

(n) Not printed.

| Serial No. | District and subdivision. | Rainfall. | Price of common rice, in seers per rupee. | | Character of the weather, condition of crops, etc. |
|---|---|---|---|---|---|
| | | | This week. | Previous week. | |
| 1 | 2 | 3 | 4 | 5 | 6 |
| | | Inches. | | | |
| 6 | BURDWAN | 3·89 | 8 | 7 | Weather hot and cloudy. The effects of weather have been fair to jute and sugarcane. Transplantation of winter paddy seedlings is being retarded for want of sufficient rain. Condition and prospects of standing crops are fair. The exports and imports of rice are going on as usual. Damage has been done to jute crop by insect-pests in some places. Harvesting has not commenced. Fodder and water are sufficient. |
| | Asansol ... | 4·56 | 6½ | 6 | |
| | Katwa ... | 5·63 | 8 | 8 | |
| | Kalna ... | 3·08 | 7¼ | 7¼ | |
| 7 | BIRBHUM ... | 3·42 | 9 | 8¾ | Weather hot and cloudy. Transplantation of winter paddy seedlings is going on in selected lands. More rain is wanted. Fodder and water are sufficient. |
| | Rampurhat ... | 5·27 | 8½ | 8½ | |
| 8 | BANKURA ... | 1·11 | 7¾ | 8 | Weather cloudy with scanty rain. More rain is urgently wanted. Transplantation of *aus* paddy seedlings is going on, but that of *aman* retarded for want of sufficient rain. Condition of standing crops is fair. Export of rice and paddy continues. |
| | Vishnupur ... | 1·52 | 7⅞ | 8 | |
| 9 | MIDNAPORE ... | 2·40 | 8 1/16 | 8 | More rain is wanted for the transplantation of winter paddy and for the jute crop at Contai and Ghatal; elsewhere the effects of weather on jute are favourable. Cattle-disease is reported from Henria and Chandrakona thanas. Fodder is sufficient. |
| | Contai ... | 0·21 | 8 | 8 | |
| | Tamluk ... | 2·45 | 7 | 6¾ | |
| | Ghatal ... | Nil | 7⅝ | 8 | |
| | Jhargram ... | 3·10 | 8 | [illegible] | |
| 10 | HOOGHLY ... | 2·19 | 6½ | 6¾ | The effects of weather are favourable. Fodder is sufficient. Condition and prospects of jute are fair. There has been a slight damage by insects in some places in the Sadar subdivision. Harvesting of jute has not commenced. Cattle-disease is reported from the Chinsurah police-station. |
| | Serampore ... | 1·65 | 6¼ | 6¼ | |
| | Arambagh ... | 0·42 | 8½ | 8½ | |
| 11 | HOWRAH ... | 0·37 | 6½ | 6½ | Transplantation of winter paddy seedlings has begun. Condition of jute and sugarcane is normal. |
| | Uluberia ... | 2·20 | 7 | 7½ | |
| 12 | RAJSHAHI (RAMPUR-BOALIA). ... | 3·81 | 7½ | 7½ | Weather seasonable. Prospects of jute and other standing crops are fair. There has been no damage to the jute crop; harvesting has been just started at some places. Fodder and water are sufficient. |
| | Naogaon ... | 2·44 | 6¾ | 6¾ | |
| | Nator ... | 2·31 | 7⅛ | 6¾ | |
| 13 | DINAJPUR ... | 2·00 | 7½ | 8 | Prospects of jute and other autumn crops are fair except in the Thakurgaon subdivision, where the prospects of jute on low lands are not good. Harvesting of jute on low lands is going on. Fodder and water are plenty. |
| | Thakurgaon ... | 9·24 | 8 | 8½ | |
| | Balurghat ... | 3·63 | 8 | 8 | |
| 14 | JALPAIGURI ... | 21·29 | 7 | 7 | Effects of weather unfavourable. Condition and prospects of *bhadoi* paddy and jute are not hopeful and these crops have been damaged materially by continuous and heavy rainfall. |
| | Alipur ... | 15·91 | 6½ | 6 | |

| Serial No. | District and subdivision | Rainfall. | Price of common rice, in seers, per rupee. | | Character of the weather, condition of crops, etc |
|---|---|---|---|---|---|
| | | | This week. | Previous week. | |
| 1 | 2 | 3 | 4 | 5 | 6 |
| | | Inches. | | | |
| 15 | DARJEELING ... | 8·93 | 5 | 5 | Paddy and *nurua* are progressing and potatoes and maize are being harvested. Cattle-disease exists at places. Fodder and water are sufficient. Prospects of jute are not good |
| | Kurseong ... | 11·34 | 6 | 6 | |
| | Siliguri ... | 10·70 | 6½ | 7 | |
| | Kalimpong ... | (*n*) | (*n*) | 5¾ | |
| 16 | RANGPUR ... | 2·31 | 7 | 7¼ | Weather favourable. Prospects of jute are fair. Reaping of jute continues and the steeping operation is being retarded owing to insufficient rain. Cattle-disease is reported from Gandachara. Fodder and water are sufficient. |
| | Nilphamari ... | 9·17 | 7 | 7½ | |
| | Kurigram ... | 3·01 | 7¼ | 7¼ | |
| | Gaibandha ... | 1·33 | 7 | 7 | |
| 17 | BOGRA ... | 2·04 | 7¼ | 7¼ | Harvesting of jute continues. Condition and prospects of jute are not satisfactory owing to drought. Transplantation of *aman* paddy seedling is practically stopped for want of rain. Cattle disease is reported from Jaipurhat thana. |
| 18 | PABNA ... | 0·92 | 7¼ | 7¼ | Weather is favourable for the growth of jute. Condition of jute is good and its harvesting has begun in low land. Some damage has been done to *aus* paddy for want of sufficient rain. Stock of rice, pasturage and water supply are sufficient. |
| | Sirajganj ... | 1·18 | 6¾ | 6¾ | |
| 19 | MALDA ... | 4·01 | 8 | 8 | Prospects of standing crops are fair. More rain is wanted for the transplantation of winter paddy. |
| 20 | COOCH BEHAR | 11·89 | 8 | 8 | Weather seasonable. Transplantation of *hatmanti* seedings and harvesting of *bitri* paddy are going on. Condition and prospects of jute are favourable except in Mekliganj and partial damage has been done to the crops in Mathabhanga by rains and floods. Cutting and steeping operations are going on. Cattle-disease is reported from the interior. |
| 21 | DACCA ... | 0·93 | 7 | 7 | Weather seasonable. Cutting and steeping of jute has begun in places. Transplantation of winter paddy is in progress. There has been a slight damage to jute by insect-pests in the Narayanganj subdivision. Cattle disease is reported from the Narayanganj subdivision. Fodder and water are sufficient. |
| | Manikganj ... | 0·28 | 7¾ | 7¾ | |
| | Narayanganj ... | 1·39 | 7½ | 7½ | |
| | Munshiganj (*a*) | (*n*) | (*n*) | 7 | |
| 22 | MYMENSINGH ... | 2·29 | 7 | 7 | Weather cloudy and hot. Transplantation of winter rice continues. Condition of jute is satisfactory; weather favourable. There has been no damage to the crop. Cutting and steeping of jute progressing. Rice market is generally steady. Prospects of standing crops are good. Fodder and water are sufficient. |
| | Jamalpur ... | 2·27 | 7½ | 7½ | |
| | Tangail ... | 0·63 | 6¾ | 6¾ | |
| | Netrakona ... | 1·91 | 7½ | 7¾ | |
| | Kishorganj ... | 2·23 | 7 | 7 | |

(*a*) Munshiganj being very near to Dacca and Narayanganj, its rainfall statistics are not quoted. To give information regarding the northern part of the district, rainfall figures for Kapasia thana are reported here.

(*n*) Not reported.

| Serial No. | District and subdivision. | Rainfall. | Price of common rice, in seers, per rupee. This week. | Price of common rice, in seers, per rupee. Previous week. | Character of the weather, condition of crops, etc. |
|---|---|---|---|---|---|
| 1 | 2 | 3 | 4 | 5 | 6 |
| | | Inches. | | | |
| 23 | FARIDPUR ... | 0·41 | [illegible] | 8 | Prospects of jute and paddy are fair. Harvesting of jute and *aus* paddy has commenced in some places. Fodder is sufficient. |
| | Goalundo (Rajbari). | 1·62 | [illegible] | 7½ | |
| | Madaripur ... | 1·[illegible] | 8 | 8 | |
| | Gopalganj (*a*) ... | 0·82 | 8 | 7 | |
| 24 | BAKARGANJ (BARISAL). | 1·10 | 8 | 8 | Weather seasonable. Prospects of standing crops are good. Fodder and water are sufficient. |
| | Pirojpur ... | 1·24 | 7 | 7 | |
| | Patuakhali ... | (*n*) | (*n*) | 7 | |
| | Dakshin Shabazpur (Bhola). | 2·29 | 7½ | 7½ | |
| 25 | CHITTAGONG ... | 3·26 | 6½ | 6½ * / 6½ | Weather seasonable. Prospects of standing crops are good. Sowing of *aman* paddy continues. Water and fodder are sufficient. *Panga* salt is selling at 11 and 8 seers per rupee at Sadar and Cox's Bazar subdivisions, respectively. |
| | COX'S BAZAR ... | 2·85 | 7 | 7 | |
| 26 | TIPPERA (COMILLA). | 2·65 | 8 | 7⅝ | Weather hot and cloudy. Prospects of standing crops are good. Harvesting of jute has commenced in low lands and the weather is favourable to its growth. |
| | Brahmanbaria | 2·23 | 6⅔ | 6⅔ | |
| | Chandpur ... | 1·49 | 7 | 6⅔ | |
| 27 | NOAKHALI ... | 3·58 | 6 | 6 | Weather seasonable. Prospects of *aus* crops are good except some damage done by salt water in *char* lands. Condition and prospects of jute are good and its harvesting has commenced. Fodder is insufficient but water is sufficient. Cattle-disease has been reported from Sudharam thana. |
| | Feni ... | 4·07 | 7 | 6½ | |
| 28 | CHITTAGONG HILL TRACTS. | 2·32 | 7½ | 7 | Weather seasonable. Fodder and water are sufficient. |
| 29 | TRIPURA STATE | 1·16 | 8 | 8 | Weather seasonable. Ploughing for and transplantation of autumn crops are in progress. Weeding of *jhoom* crops is nearly finished. Condition of cattle is good except in Sadar and Belonia. Prospects of crops are fair. Fodder and water are sufficient. Cleansed cotton is selling at Rs. 20 to Rs. 35 per maund and jute at Rs. 7 to Rs. 10 per maund. |

* Burma rice. (*n*) Not reported.

(*a*) The rainfall at Haridaspur, which is very near to Gopalganj, is shown here.

J. C. ROY, for *Director of Agriculture, Bengal.*

DACCA, *the 21st July 1923.*

## GOVERNMENT OF BENGAL, IRRIGATION DEPARTMENT.

***Approximate return of traffic on the Circular and Eastern Canals for the week ending Saturday, the 14th July 1923, as compared with the corresponding week of the previous year.***

| Nature of cargo | Week ending Saturday, the 14th July 1923. | | | Week ending Saturday, the 15th July 1922. | | |
|---|---|---|---|---|---|---|
| | Number of boats | Weight of cargo | Tollage | Number of boats. | Weight of cargo | Tollage |
| | | Mds | Rs | | Mds | Rs |
| Rice and paddy ... ... | 319 | 69,155 | 1,161 | 196 | 34,675 | 517 |
| Jute ... ... ... | 14 | 9,625* | 83 | 36 | 33,050† | 268 |
| Firewood ... ... | 103 | 69,825 | 1,012 | 66 | 42,325 | 632 |
| Other articles ... .. | 912 | 276,890 | 3,117 | 989 | 351,150 | 3,249 |
| Total ... | 1,348 | 425,495 | 5,373 | 1,287 | 461,200 | 4,666 |
| Empty boats and rafts ... | 478 | ... | 988 | 497 | ... | 1,660 |
| GRAND TOTAL ... | 1,826 | 425,495 | 6,361 | 1,784 | 461,200 | 6,326 |

| | Mds |
|---|---|
| * Weight by canal measurement | 10,375 |
| † Ditto ditto | 34,450 |

N. B.—It is intended to discontinue publishing this information, unless some one protests [illegible] August 1923.

T. C. [illegible]HATTACHARYA,
*Assistant Secretary to the Government of Bengal.*

CALCUTTA, *the 20th July 1923.*

**Statement showing the daily gauge readings of certain rivers at the stations named below for the week ending Thursday, the 19th July 1923.**

| Name of river and place where readings are taken. | | Date. | Hour | Reading on gauge | Value of zero referred to P W D datum. | Height above P W D datum | Compared with previous day's height: Rise | Compared with previous day's height: Fall | Height above P W D datum on same date in— 1922 | Height above P W D datum on same date in— 1923 | Remarks. |
|---|---|---|---|---|---|---|---|---|---|---|---|
| Ganges ... | Monghyr ... | 13th July 1923 | 6 A.M ... | 112·20′ | 0·00′ | 112·20′ | 0 10′ | ... | 118·30′ | [illegible] | |
| | Rajmahal ... | 13th „ „ | 6 „ ... | ... | 56·319′ | | ... | ... | [illegible] | [illegible] | |
| | Goalundo ... | 13th „ „ | 8 hours ... | 22 00′ | 4 896′ | [illegible] | 0·10′ | ... | 26 696′ | [illegible] | |
| Brahmaputra ... | Gauhati ... | 13th „ „ | 8 A.M. ... | 23 20′ | [illegible]·18′ | [illegible]8 38′ | 1 00′ | ... | 159·78′ | 162 98′ | |
| | Serajganj ... | 13th „ „ | 12 hours ... | 37 60′ | 1·509′ | 39 109′ | 0·20′ | ... | 40·109′ | [illegible]3 909′ | |
| | Dibrugarh ... | 13th „ „ | 9 A M. ... | 23 30′ | 314·18′ | 337·48′ | 0 70′ | ... | 333·38′ | 336[illegible]8′ | |
| Meghna ... | Bhairab Bazar | 13th „ „ | [illegible] hours ... | 17 08′ | 1·61′ | 18 69′ | Steady | | 17·86′ | 20·44[illegible] | |
| | Chandpur ... | 13th „ „ | ... | 11·25′ | 1·61′ | 12 86′ | 0·33′ | ... | 12 61′ | 12 94′ | |
| | Fenchuganj ... | 13[illegible] „ „ | 7 hours ... | 28 80′ | 1 509′ | 30 309′ | ... | 0·20′ | 27·709 | 31 209′ | |
| Dhaleswari ... | Sabhar ... | 13th „ „ | 6 A.M. ... | 26 10′ | – 8 62′ | 17 48′ | 0 20′ | ... | 18 78′ | 18 88′ | |
| Bhagirathi ... | Swarupganj ... | 13th „ „ | 6 „ ... | 6·87′ | 1·509′ | 8 379 | ... | 0·31′ | 18 379′ | 8 699′ | |
| Damodar ... | Edilpur ... | 13th „ „ | 6 „ ... | 4 08′ | 92·58′ | 96·66′ | ... | 0·67′ | 101 33′ | 100·41′ | |
| Lakhya ... | Narayanganj | 13th „ „ | 8 „ ... | 20 83′ | – 5 59′ | 15 24′ | 0·31′ | ... | 16 18′ | 16·33′ | |
| Madaripur Bil Route | Takerhat ... | 13th „ „ | 6 „ ... | 90 20′ | – 0 599′ | 89 601′ | 0 15′ | ... | 10 901′ | 10 701′ | |

**Statement showing the daily gauge readings of certain rivers at the stations named below for the week ending Thursday, the 19th July 1923.**

| Name of river and place where readings are taken | | Date. | Hour | Reading on gauge | Value of zero referred to P. W. D datum. | Height above P. W. D datum | Compared with previous day's height: Rise | Compared with previous day's height: Fall. | Height above P. W. D. datum on same date in— 1922 | Height above P. W. D. datum on same date in— 1921 | Remarks. |
|---|---|---|---|---|---|---|---|---|---|---|---|
| Ganges | Monghyr | 14th July 1923 | 6 A.M. | 112 50′ | 0·00′ | 112 50′ | 0·30′ | ... | 118·70′ | 112·00′ | |
| | Rajmahal | 14th „ „ | 6 „ | ... | 56 319′ | ... | ... | ... | 78 119′ | 73 219′ | |
| | Goalundo | 14th „ „ | 8 hours | 22 30′ | 4 896′ | 27 196′ | 0 30′ | ... | 26 696′ | 27 196′ | |
| Brahmaputra | Gauhati | 14th „ | 8 A.M. | 23 90′ | 135 18′ | 159 08′ | 0 70′ | ... | 159 98′ | 163·78′ | |
| | Serajganj | 14th „ „ | 12 hours | 37 90′ | 1 509′ | 39 409′ | 0·30′ | ... | 40 109′ | 44·10[illegible] | |
| | Dibrugarh | 14th „ „ | 9 A M | 23·00′ | 31[illegible]18′ | 337 18′ | ... | 0 30′ | 333·38′ | 335[illegible] | |
| Meghna | Bhairab Bazar | 14th „ „ | 6 hours | 17 08′ | 1 61′ | [illegible]18 69′ | Steady | | 17·86[illegible] | 20·78′ | |
| | Chandpur | 14th „ | ... | 10 92′ | [illegible]′ | 1[illegible]3′ | ... | 0·33′ | 12 61[illegible] | 12 8[illegible] | |
| | Fenchuganj | 14th „ | 7 hours | 28 60 | 1 509′ | 30·1[illegible] | ... | 0 20 | 27 809′ | [illegible] | |
| Dhaleswari | Sabhar | 14th „ „ | 6 A M. | 26 40 | – 8 62 | 17 78[illegible] | 0 30 | ... | 18 78[illegible] | 19 [illegible] | |
| Bhagirathi | Swarupganj | 14th „ „ | 6 „ | 6 82′ | 1·509′ | 8·329′ | ... | 0 05′ | 18 849′ | 9 [illegible]69′ | |
| Damodar | Edilpur | 14th „ „ | 6 „ | 4 92′ | 92 58′ | 97 50′ | 0 82[illegible] | ... | 103 58′ | 102 58′ | |
| Lakhya | Narayanganj | 14th „ „ | 8 „ | 21·03′ | – 5 59′ | 15 44′ | 0 20′ | ... | 16 24′ | 16 53′ | |
| Madaripur Bil Route | Takerhat | 14th „ „ | 6 „ | 20 30′ | – 0 599 | 89·701′ | 0 10′ | ... | 11 101′ | 10 901′ | |

**Statement showing the daily gauge readings of certain rivers at the stations named below for the week ending Thursday, the 19th July 1923.**

| Name of river and place where readings are taken | | Date | Hour | Reading on gauge | Value of zero referred to P W D datum. | Height above P W D datum. | Compared with previous day's height | | Height above P W D datum on same date in— | | Remarks |
|---|---|---|---|---|---|---|---|---|---|---|---|
| | | | | | | | Rise | Fall | 1922 | 1921. | |
| Ganges | Monghyr ... | 15th July 1923 | 6 A.M. ... | 113·00′ | 0 00′ | 113 00′ | 0 50′ | ... | 118 70′ | 112·[illegible] | |
| | Rajmahal ... | 15th „ „ ... | 6 „ ... | ... | 56 319′ | [illegible] | ... | ... | 78 515′ | 73·[illegible] | |
| | Goalundo ... | 15th „ „ ... | 8 hours ... | 22 30′ | [illegible] | 27 [illegible] | Steady | | 26 696′ | [illegible] | |
| Brahmaputra | Gauhati ... | 15th „ „ ... | 8 A.M. ... | 24·30′ | 135 [illegible]8′ | [illegible]9 48′ | 0·40′ | ... | 159 88′ | 164·28′ | |
| | Serajganj ... | 15th „ „ ... | 12 hours ... | 38[illegible] | 1 [illegible]09′ | 39 809′ | 0 40′ | ... | 40 009′ | 44[illegible]9′ | |
| | Dibrugarh ... | 15th „ „ ... | 9 A.M. | 22 70′ | 314·28′ | 336·88 | ... | 0 30′ | 334 78′ | 336·[illegible] | |
| Meghna | Bhairab Bazar | 15th [illegible] | 6 hours ... | 17 17′ | 1 61[illegible] | 18 78′ | 0 08′ | ... | 18 03′ | 11·03′ | |
| | Chandpur ... | 15th [illegible] „ ... | ... | 11 33′ | 1 61[illegible] | 12 94′ | 0 42′ | ... | 12 44′ | 12 86′ | |
| | Fenchuganj | 15th „ „ ... | 7 hours ... | 28 45 | 1 509′ | 29 959′ | ... | 0 15′ | 27 859′ | 31 609′ | |
| Dhaleswari ... | Sabhar ... | 15th „ „ ... | 6 A.M. ... | 26·60′ | −8·62′ | 17 98′ | 0·20′ | ... | 18 88′ | 19·28′ | |
| Bhagirathi ... | Swarupganj ... | 15th „ „ ... | 6 „ ... | 8 40′ | 1 509 | 9 909′ | 1·58′ | ... | 19 889′ | 10 099′ | |
| Damodar ... | Edilpur ... | 15th „ „ ... | 6 „ ... | 8 00′ | 92 58′ | 100 58′ | 3 08′ | ... | 105·58′ | 102·33′ | |
| Lakhya ... | Narayanganj | 15th „ „ ... | 8 „ ... | 21·25′ | −5 59′ | 15·66′ | 0 22′ | ... | 16 20′ | 16 62′ | |
| Madaripur Bil Route | Takerhat ... | 15th „ „ ... | 6 „ ... | 90 50′ | −0 599′ | 89 901′ | 0 20′ | ... | 11 301′ | 11 001′ | |

**Statement showing the daily gauge readings of certain rivers at the stations named below for the week ending Thursday, the 19th July 1923.**

| Name of river and place where readings are taken | | Date | Hour | Reading on gauge | Value of zero referred to P W D datum | Height above P W D datum | Compared with previous day's height: Rise | Compared with previous day's height: Fall | Height above P W D datum on same date in— 1922 | Height above P W D datum on same date in— 1921 | Remarks. |
|---|---|---|---|---|---|---|---|---|---|---|---|
| Ganges ... | Monghyr ... | 16th July 1923 | 6 A M. ... | 113 30′ | 0·00′ | 113 30′ | 0 30′ | .. | 118 70′ | 113·10′ | |
| | Raj[illegible]al ... | 16th „ „ ... | 6 „ ... | ... | 56·319′ | ... | .. | ... | 78 619′ | 74·069 | |
| | Goalundo ... | 16th „ „ ... | 8 hours ... | 22 70′ | 4 896′ | 27 596 | 0 40′ | ... | 26·696′ | 27·596 | |
| Brahmaputra ... | Gauhati ... | 16th [illegible] „ ... | 8 A M. ... | 25 40′ | 135[illegible]8′ | 160 58 | 1 10′ | ... | 159·48′ | 164 7[illegible] | |
| | Serajganj ... | 16th „ „ [illegible] | [illegible] hours ... | 38 50′ | 1[illegible]509′ | 40·009′ | 0 20 | ... | 39 809′ | 44[illegible] | |
| | Dibrugarh ... | 16th „ „ ... | 9 A.M. ... | 24 40′ | 314 [illegible]′ | 338 58′ | 1 70′ | ... | 334 28′ | 33[illegible]58′ | |
| Meghna ... | Bhairab Bazar | 16th „ „ ... | 6 hours . | [illegible]5′ | [illegible]1 6[illegible] | 18 86′ | 0 08′ | ... | 18 1[illegible] | [illegible]·28′ | |
| | Chandpur ... | 16th „ „ ... | ... | 11·17′ | 1·61′ | 12 78′ | ... | 0 17 | 12[illegible] | 13 11′ | |
| | Fenchuganj ... | 16th „ „ ... | 7 A M. ... | 28 25′ | [illegible]509′ | [illegible]59′ | ... | 0·20 | 28[illegible]09′ | [illegible]709′ | |
| Dhaleswari ... | Sabhar ... | 16th „ „ ... | 6 „ ... | 26 80′ | – 8 62 | [illegible]8 18′ | 0 20′ | ... | [illegible] | [illegible] | |
| Bhagirathi ... | Swarupganj ... | 16th „ „ ... | 6 „ ... | 10·35′ | 1 509′ | 11·[illegible] | 1 95′ | ... | 20 929′ | [illegible] | |
| Damodar ... | Edilpur ... | 16th „ „ ... | 6 „ ... | 9 25′ | 92·58′ | 101·83′ | [illegible] | ... | 104 50′ | 99 58′ | |
| Lakhya ... | Narayanganj | 16th „ „ ... | 8 „ ... | 21 37′ | – 5 59′ | 15 78′ | 0·12′ | ... | 16 12′ | [illegible]74′ | |
| Madaripur Bil Route | Takerhat ... | 16th „ „ ... | 6 „ ... | 90 60′ | – 0·599′ | 90·001′ | 0 10′ | ... | 11·401′ | 11·001′ | |

**Statement showing the daily gauge readings of certain rivers at the stations named below for the week ending Thursday, the 19th July 1923.**

| Name of river and place where readings are taken | | Date. | Hour | Reading on gauge | Value of zero referred to P W D datum | Height above P W D datum | Compared with previous day's height: Rise | Compared with previous day's height: Fall | Height above P. W. D datum on same date in— 1922 | Height above P. W. D datum on same date in— 1921. | Remarks. |
|---|---|---|---|---|---|---|---|---|---|---|---|
| Ganges ... | Monghyr ... | 17th July 1923 | 6 A.M ... | 113·50′ | 0 00′ | 113[illegible] | 0·20′ | ... | 11[illegible] | 1[illegible] | |
| | Rajmahal ... | 17th „ „ ... | 6 „ ... | | 56 319′ | | | | 78·419′ | [illegible] | |
| | Goalundo ... | 17th „ „ ... | 8 hours ... | 22·90′ | [illegible] | [illegible] | 0·20′ | ... | 26·[illegible]96′ | [illegible]96′ | |
| Brahmaputra ... | Gauhati ... | 17th „ „ ... | 8 A.M ... | 25 80′ | 135·13′ | 160 98′ | 0·40′ | ... | 159 [illegible] | 164·98′ | |
| | Serajganj ... | 17th „ „ ... | 12 hours ... | [illegible]·50′ | 1·5[illegible] | 40 009′ | Steady | | 39·809′ | [illegible]309′ | |
| | Dibrugarh ... | 17th „ „ ... | 9 A.M. ... | 23 80′ | 314·1[illegible] | 337 98′ | ... | 0·60′ | 333 88′ | 3[illegible]58′ | |
| Meghna ... | Bhairab Bazar | 17th [illegible] ... | 6 hours | 17 42′ | 1[illegible] | 19·03′ | 0 17′ | ... | 18 11′ | 21·[illegible] | |
| | Chandpur | [illegible]th „ ... | ... | 11 25′ | 1·51′ | 12 86′ | 0·08′ | ... | 11 61′ | 12 86′ | |
| | Fenchuga[illegible] | [illegible]th „ „ ... | 7 hours | 28 05′ | 1·509′ | 29 559′ | ... | 0 20′ | 28·509′ | 31·809′ | |
| Dhaleswari ... | Sabhar ... | 17th „ „ ... | 6 A M | 27·00′ | −8·52′ | 18·38′ | 0 20′ | ... | 18·88′ | 19 78′ | |
| Bhagirathi ... | Swarupganj ... | 17th „ „ ... | 6 „ ... | 9 79′ | 1·509′ | 11·299′ | ... | 0 56′ | 22·319′ | 9 649′ | |
| Damodar ... | Edilpur ... | 17th „ „ ... | 6 „ ... | 6 42′ | 92 58′ | 99 00′ | 2·83′ | ... | 103 91′ | 97·75′ | |
| Lakhya ... | Narayanganj | 17th „ „ ... | 8 „ ... | 21 50′ | −5 59′ | 15·91′ | 0 12′ | ... | 16·03′ | 16·95′ | |
| Madaripur Bil Route | Takerhat ... | 17th „ „ ... | 6 „ ... | 90 75′ | −0 599′ | 90·151′ | 0 15′ | .. | 11·351′ | 11·001′ | |

**Statement showing the daily gauge readings of certain rivers at the stations named below for the week ending Thurs the 19th July 1923.**

| Name of river and place where readings are taken | | Date | Hour | Reading on gauge | Value of zero referred to P W D datum | Height above P W D datum | Compared with previous day's height. Rise | Compared with previous day's height. Fall | Height above P W D datum on same date in— 1922 | Height above P W D datum on same date in— 1921 |
|---|---|---|---|---|---|---|---|---|---|---|
| ...anges ... | Mong[illegible] | 18th July 1923 .. | 6 A M ... | 114 00′ | 0·00′ | 114 00′ | 0 50 | ... | 118 10′ | 114 50′ |
| | Rajmahal | 18th „ „ ... | 6 „ ... | | 56·219′ | | | | 78 219′ | 74 969′ |
| | Goalundo | „ „ ... | 8 hours ... | 23 00 | 4·596′ | 27 596′ | 0 10 | ... | 26 596′ | 27 896′ |
| ...rahmaputra ... | Gauhati ... | 18th „ „ | 8 A M. ... | 26·00 | 135 [illegible] | 161 00′ | 0 20′ | ... | 160 68′ | 164 7 |
| | Serajganj ... | 18th „ „ ... | 12 hours | 38 50′ | 1 5[illegible] | 40 009′ | Steady | | 39 909′ | 4[illegible] |
| | Dibrugarh ... | 18th „ „ ... | 9 A M ... | [illegible]90′ | 31·18[illegible] | 336 08′ | ... | 1 90′ | 334 88′ | 3[illegible] |
| ...eghna ... | Bhairab Bazar | 18th „ „ ... | 6 hours ... | 17 50 | [illegible]61′ | 19 11 | 0 08 | ... | 18 2[illegible] | |
| | Chandpur ... | 18th „ „ ... | ... | 11 50 | [illegible] | 1[illegible] | 0 25′ | ... | 11 2[illegible] | |
| | Fenchuganj ... | 18th „ „ ... | 7 hours ... | 27 95 | 1·509′ | [illegible] | ... | 0 10′ | 28 709′ | [illegible] |
| ...aleswari ... | Sabhar ... | 18th „ „ ... | 6 A M .. | 27 20′ | −8 62 | 18 58 | 0·20′ | ... | 18·78′ | [illegible] |
| ...agirathi ... | Swarupganj ... | 18th „ „ .. | 6 „ ... | 9 09′ | 1 509′ | 10 599′ | | 0 70 | 23·649′ | 9 769′ |
| ...modar ... | Edilpur ... | 18th „ „ ... | 6 „ ... | 5 00′ | 92 58 | 97 58′ | ... | 1 42′ | 103·08′ | [illegible] |
| ...khya ... | Narayanganj | 18th „ „ ... | 8 „ ... | 21 62′ | −5 59 | 16·03′ | 0 12′ | ... | 16 01′ | 17 10′ |
| ...darıpur Bil Route | Takerhat .. | 18th „ „ ... | 6 „ ... | 90 85′ | −0 599′ | 90 251′ | 0 10′ | ... | 11 351′ | 11 101′ |

**Statement showing the daily gauge readings of certain rivers at the stations named below for the week ending Thursday, the 19th July 1923.**

| Name of river and place where readings are taken. | | Date | Hour | Reading on gauge | Value of zero referred to P W D datum | Height above P W D datum | Compared with previous day's height: Rise. | Compared with previous day's height: Fall. | Height above P W D datum on same date in— 1922 | Height above P W D datum on same date in— 1921 |
|---|---|---|---|---|---|---|---|---|---|---|
| Ganges ... | Monghyr ... | 19th July 1923 | 6 A M. ... | 114 30′ | 0 00′ | 114 30′ | | ... | 118·60′ | 11[illegible]·00′ |
| | Rajmahal ... | 19th „ „ ... | 6 „ ... | ... | 56·319′ | ... | ... | ... | 73·119′ | 7[illegible] |
| | Goalundo ... | 19th „ „ ... | 8 hours ... | 23·00′ | 4 896′ | [illegible]·89′ | Steady | | 26 [illegible]′ | [illegible] |
| Brahmaputra ... | Gauhati ... | 19th „ „ ... | 8 A M. ... | 26·60′ | [illegible] 18′ | 1[illegible] [illegible]8′ | 0 60′ | ... | 160 [illegible] | |
| | Serajganj ... | 19th „ „ ... | 12 hours ... | 38·50′ | 509′ | 40 009′ | Ste[illegible] | | 40·0[illegible] | |
| | Dibrugarh ... | 19th „ „ ... | 9 A M. ... | 9 10 | 31 1[illegible] | 335 28′ | ... | 0 80′ | 335 5[illegible] | [illegible]3. |
| Meghna ... | Bhairab Bazar | 19th „ „ ... | 6 [illegible] ... | 17·67′ | 1[illegible] | 19 28′ | 0 17′ | ... | 18 53′ | 21[illegible] |
| | Chandpur ... | 19th [illegible] „ ... | ... | 11 58′ | 1[illegible] | 13 19′ | 0·08′ | ... | 11 44′ | 13 1 |
| | Fenchuganj [illegible] | [illegible] „ ... | 7 hours ... | 27·80′ | 1·[illegible]09′ | 29·309′ | ... | 0 15′ | 28 909′ | 31·909 |
| Dhaleswari ... | Sabhar[illegible] | 19th „ „ ... | 6 A.M ... | 27 50′ | −8·32′ | 18·88′ | 0 30′ | ... | 18 78 | 20 18′ |
| Bhagirathi ... | Swarupganj ... | 19th „ „ ... | 6 „ ... | 8 76 | 1 [illegible]09′ | 10 269′ | ... | 0·33′ | 23 509′ | 9·899 |
| Damodar ... | Edilpur ... | 19th „ „ ... | 6 „ ... | 5 17′ | 92[illegible]58 | 97·75′ | 0·17′ | ... | 103 00′ | 96·00[illegible] |
| Bakhya ... | Narayanganj... | 19th „ „ ... | 8 „ ... | 21·67′ | −5·59′ | 16·08 | 0 04′ | ... | 16·03′ | 17·33′ |
| Madaripur Bil Route | Takerhat ... | 19th „ „ ... | 6 „ .. | 91·05′ | −0·599′ | 90·451′ | 0·20′ | ... | 11·401′ | 11·001′ |

**Vital statistics of Towns with a population of 50,000 and over of the Bengal Presidency for the week ending Saturday, the 14th July 1923.**

| District. | No. | Towns | Population under registration according to census of 1921 | | | Births registered. | | Deaths registered | | | | | | | | | | | | | | | | | | | |
|---|---|---|---|---|---|---|---|---|---|---|---|---|---|---|---|---|---|---|---|---|---|---|---|---|---|---|---|
| | | | Male | Female | Total | Number registered (excluding still-births) | Still-born number registered | Cholera | Small pox. | Plague. | Malaria | Enteric fever | Measles | Relapsing fever | Kala-azar | Other fevers | Dysentery | Diarrhœa. | Influenza. | Pneumonia | Phthisis | Other respiratory diseases. | Injuries including suicide | Deaths from child-birth | Other causes | Total of all causes | | |
| | | | | | | | | | | | | | | | | | | | | | | | | | | Male | Female | Total |
| Calcutta | 1 | Calcutta | 617,590 | 296 | | 255 | 15 | 28 | 2 | | 22 | 13 | 1 | | 14 | 19 | 26 | 2 | 7 | 42 | 29 | 47 | 14 | -- | 175 | 260 | 182 | 442 |
| Burdwan | 2 | Asansol Mining Settlement | 176 814 | 152,339 | 329 356 | | | 2 | -- | -- | 2 | | | 7 | | 8 | 5 | | | 15 | | 12 | 2 | 1 | 81 | 71 | 64 | 19 |
| Howrah | 3 | Howrah | 128,472 | 66,829 | 195,301 | 59 | 5 | 4 | | | 5 | 6 | | | | 17 | 2 | 4 | -- | 6 | 1 | 16 | 3 | -- | 29 | 50 | 44 | |
| Dacca | 4 | Dacca | 67,333 | 52,117 | 119,450 | 65 | 3 | | | | | | | | | 20 | 5 | | | 6 | | 2 | 1 | | 18 | | | |
| 24-Parganas | 5 | Maniktala | 40,996 | 26,376 | 67 372 | 12 | 1 | 5 | | | 3 | -- | | | | 2 | | | | | 2 | 1 | | -- | 11 | 17 | | |
| | 6 | Bhatpara | 45,723 | 19 886 | 65,609 | 30 | | 2 | | | 1 | | -- | | | 3 | | | | | | | | | 3 | | | |
| | 7 | Cossipur-Chitpur | 36 289 | 20,185 | 56,474 | 18 | 1 | 5 | | | 2 | | | | | 1 | 2 | | | | 1 | | | -- | 5 | 8 | | |
| | 8 | Titagarh | 36,533 | 15,918 | 52 451 | 9 | 1 | 1 | | | | | | | | 9 | | 1 | | | | | | | 1 | 7 | | |

CALCUTTA, *the 20th July 1923.*

CHAS A. BENTLEY, *Director of Public Health, Be*

| Divis | | | | | | | | | | | | | | | | | | | | |
|---|---|---|---|---|---|---|---|---|---|---|---|---|---|---|---|---|---|---|---|---|
| Presidency | 24 Parganas | Sangar Island | | 0 03 | | | | | 0 22 | | | 0 01 | | | | 0·01 | .. | | 0·01 | |
| | | Diamond Harbour. | | | | | | | | | | | | | | | 1 90 | | | |
| | | Budge-Budge | | 0 25 | | 0 71 | | | 0·05 | | | 0·04 | | | | 1 21 | 0 34 | 1 34 | | 0·04 |
| | | Canning Town | | | | | | | 0 40 | | | | | | | | | | | |
| | | Alipore | | | | | | | 1 80 | | 0 01 | 0 11 | 0·01 | | | 0 06 | 0 47 | 0 07 | | |
| | | Barrackpore | | | | 0 84 | | | 1 50 | | | 0 22 | | | | 0 45 | 0 95 | | 0 10 | |
| | | Dum-Dum | | | | | 1 55 | | | | | | | | | 2 19 | 0 19 | | 0 35 | |
| | | Baraset | | | | 0 18 | | 0·65 | | | | | | | | | 0 40 | | | |
| | | Basirhat | | | | 1 39 | 0 20 | | 1 09 | | | | | | | | 1 40 | 2 41 | | |
| | | Gosaba | | | | 0 35 | | | | | | | | | | | 1·65 | | | |
| | Nadia | Ranaghat | | | | | 0 08 | | | | 0 50 | | | | | | 0·45 | 0·50 | | 0 02 |
| | | Krishnagar | | | | | 0 79 | | | | 1 14 | | | | | 0 37 | 0 22 | 0·30 | | |
| | | Chuadanga | | | | | 0 02 | | | | 1 75 | | 0 02 | | | 0 06 | 0 72 | 0 25 | | 0 01 |
| | | Meherpur | | | | | | | | 1 30 | 0 25 | | | | | 0 25 | 0 23 | | 0 90 | |
| | | Kushtia | | | 0 09 | | | | | | | | | | 0 08 | 0 52 | 0 14 | | | |
| | | Haringhata | | | | | | | | | 0 08 | 0 01 | | | | 0 15 | 0 29 | 0 14 | 0·16 | |
| | Murshidabad | Kandi | | | | | | 0 24 | | | 1 05 | | 0 03 | | | | 0·25 | | | 2 50 |
| | | Berhampore | | | | | | | 0 13 | | 0 35 | | | | | | | | | |
| | | Lalbagh | | | 0 05 | | | | | | | | | | | 0 06 | 0·35 | | | 0 32 |
| | | Azimganj | | | 0 20 | | | | | 0 03 | | 0 07 | | | 0 02 | 0 16 | 0 12 | | 0 30 | |
| | | Jangipur | | | 0 04 | | | | | 0 01 | | | | | 0 45 | 0 07 | | | 0 27 | |
| | | Lalgola | | | | | | | | 0 46 | | | | | 2·00 | | 0 30 | | | 0 21 |
| | | Akriganj (*Maricha*) | | | | | | | 0 40 | | 0 30 | | | | | 0 58 | 0 69 | | | 0 97 |
| | | Patkabari | | | | | | | | 1 70 | 0 33 | | | | 0 36 | | | | | |
| | | Dumkal | | | 15 | | | | 0 40 | | | | | | | | | 0 90 | | |
| | | Kallyanganj (*Ishanpur*) | | | | 0 71 | | | 0 27 | | 0 18 | | | | | | | | | 0 45 |
| | Jessore | Narail | 0 01 | | 0 19 | | | 2 07 | | | 0 20 | | | | 0·03 | | 0·15 | | 0 25 | |
| | | Jhenida | | | | | | | | | 0 07 | | | | 0 05 | 1 21 | 0·45 | | | |
| | | Jessore | | | | 0 10 | | | | | | | | | | | 0 19 | | | |
| | | Magura | | | | | | | 0 05 | | | | | | | 0 30 | 1 00 | 0 10 | 0 28 | |
| | | Bongaon | | | | | | | | | 0 43 | | | | 0 03 | | 1 10 | 2 25 | | 0 01 |
| | Khulna | Satkhira | | | | 0·02 | 20 | | 0 01 | | 0·03 | | | 0 04 | | | 1 46 | 0 36 | | |
| | | Bagerhat | | | | | | | | 0 73 | | | | | | | 0 49 | | | |
| | | Khulna | | | | | | | | | 0 36 | | | | | | 0 15 | 0 03 | | |
| | | Kaliganj | | | | 0 05 | | | | | | | | | | | 0 31 | 0 10 | | 0 35 |
| | | Nakipur | | | | | | 38 | | | | | | | | | 0 40 | | | |
| | | Dumuria | | | | | | | | | 1 20 | | | | | | | | | |
| | | Rampal | | | | | | | | | 0 35 | | | | | | 0 91 | | | |
| | | Kalaroa | | | | | | | 0 12 | 0 62 | | | 0 04 | | | | 0 20 | 0 16 | | |
| | | Paikgachha | | | | | 0 39 | | | 0 36 | | | | | | | 2 10 | | | 1 10 |
| | | Mollahat | | | 0 70 | | | | 69 | | 1 60 | | | | | | | | | |
| | | Morelganj | | 2·25 | | | | 1·55 | | | 0 22 | | | | | | | | | |
| | | Tala | | | | | | | | | | | | | | | 0 94 | | .. | 0 26 |
| Burdwan | Burdwan | Kalna | | | | 0 85 | | | | | 0 45 | | | | | 0 27 | 1 02 | | | 0 25 |
| | | Burdwan | | 0 02 | | 0 07 | | | 0 81 | | | | | | | 0 12 | 1 71 | 0 17 | | 1 45 |
| | | Katwa | | | | | | | | | 0 32 | | | | | 0 50 | 0 49 | 0 24 | | |
| | | Asansol | | 0 13 | | | 0 01 | | | | | | | | | 0 29 | 0 11 | 0 51 | | 0 03 |
| | | Mankar* | | | | | | | | | | | | | | | | | | |
| | | Mangalkot | | | | | | | | 0 | | | | | 0 30 | | | | | 1 50 |
| | | Royna | | | | | | | | | | | | | | 0 95 | 0 90 | | | 1 00 |
| | | Monteswar* | | | | | | | | | | | | | | | | | | |
| | Birbhum | Suri | | | | | | | | | | | | | | 0 45 | 0 24 | | | 0 28 |
| | | Hetampur* | | | | | | | | | | | | | | | | | | |
| | | Rampurhat | | | 0 80 | | | | | | | | | | | 0 80 | 0·10 | | | |
| | | Bolpur | | | | | | | | 0 45 | | | | | | | 0 42 | | | |
| | | Murarai | | | 2 00 | | | 0·50 | | | | | | | | 1 10 | | | | |
| | | Labpur | | | | 0 42 | | | | | | | | | | 0·45 | 0 15 | | | 0 10 |
| | Bankura | Bankura | 0 02 | 0 10 | | | 0 42 | | 0 22 | | | | | | | 0 87 | | 0 03 | | |
| | | Vishnupur | | 0 35 | | | | | 0·69 | | | | | | | 1 30 | 0 56 | 0 11 | | |
| | | Mallara | | | | | | | | | | | | | | | | | | |
| | | Khatra | 0 07 | 0 01 | | | | | 0·10 | | | 0 11 | | | | 0 46 | | 0 86 | 0·82 | 0·09 |
| | | Indas | | 0·25 | | | | | | | | | | | | 0·04 | | | | 0·05 |
| | | Kotalpur | | | | | | | 0·04 | | | | | | | 1·29 | | 2 40 | 0·09 | 0 04 |
| | | Onda* | | | | | | | | | | | | | | | | | | |
| | | Gangajalghati | | | | | | | 0·05 | | | | | | | 0·04 | 0 09 | 0·42 | | 0·20 |
| | | Raipur | | 0 40 | | | | | 0 70 | | | | | | | 0 95 | 0 45 | | | |
| | | Sonamukhi* | | | | | | | | | | | | | | | | | | |
| | | Taldangra | | | | | | 0 42 | | | 0·46 | | | | 0 66 | | | 0·09 | | |
| | | Saranga* | | | | | | | | | | | | | | | | | | |
| | | Indpur | | | | | 0 39 | 1·26 | | | | | | | 0 83 | | 0 45 | | | |
| | | Arhra | | | | | | 0·52 | | | | | | | | 0 10 | 0·11 | | | |
| | | Barjora | | | | | | 0 02 | | | | | | | 0·03 | 0 04 | 0 18 | | | |
| | | Simlapal | | | | | 0 65 | 0 05 | | | 0 33 | | | | 1·04 | | 0 10 | 0 59 | 0 03 | 0 66 |
| | | Mejia* | | | | | | | | | | | | | | | | | | |
| | | Sironanipur | 0 20 | | | | | 0 10 | | | | | | | | 1 40 | 1·02 | | | |
| | | Palasdanga | 0·20 | | | | | | | | | | 0 10 | | | | | | | |
| | | Ohatna* | | | | | | | | | | | | | | | | | | |
| | | Ranibandh | 0 34 | | | | | | 0 01 | | 0·33 | | 0·03 | | 0 21 | | 0·50 | 1 64 | | |
| | | Saltora | | | | | | 0 10 | | | | | | | | 0 15 | | | | |
| | | Joypur | | 0·18 | | | | 1 22 | 0 10 | | | | | | | | 0 40 | | 0·10 | |
| | | Ambikanagar | | | | 0·23 | | | 0·13 | 0·14 | | | | | 0 34 | 0 12 | | | 0 50 | |
| | | Jairampur (*Radhanagar*) | 0 54 | | | | | 1·01 | | | | | | | 1 85 | 0 08 | | | | |

* Subsoil not mapped

| | | | | | | | | | | | | | | | | | | | |
|---|---|---|---|---|---|---|---|---|---|---|---|---|---|---|---|---|---|---|---|
| | 0 15 | | 0 38 | 0 08 | 1 75 | 4·40 | 0 80 | 0·76 | 0 67 | 7 | 12 1 | 9 34 | | | | 10 75 | Saugor Island | 24 Parganas |
| | 1 10 | | 0·24 | 0·11 | 0 31 | 0 15 | | 0 57 | | 9 | 11·8 | [illegible] | | | | 11 04 | Diamond Harbour | |
| | 0 12 | | | 0 74 | 0 13 | 0 11 | 0·02 | 0 07 | 0 32 | 10 | 13 3 | [illegible] | | | | 12 23 | Budge-Budge | |
| | | 0·46 | | 1·10 | 3 75 | 1 30 | 1 25 | | 0 40 | 5 | 13·2 | 8 6 | | | | 11·45 | Canning Town | |
| 0·01 | 0 93 | | | 0·63 | 0 78 | 0 30 | 0·02 | 0 02 | 0 15 | 8 | 12 9 | 5 35 | | | | 11 83 | Alipore | |
| 0 53 | | | | 0·35 | 0·26 | | 0·30 | | | 10 | 11 7 | 5 30 | 10 48 | | | 10 48 | Barrackpore | |
| | 0 43 | | | 1 35 | 0·78 | 0·26 | 0 29 | | 0 80 | 11 | 12 0 | 9 06 | 11 21 | 2 19 | | 11 27 | Dum Dum | |
| 0 70 | | | | 0 44 | 0 32 | 0 30 | 0 40 | | | 8 | 12 6 | 3 47 | 10 58 | 0 70 | | 10 68 | Barasat | |
| 0 43 | 0 98 | | | 2 32 | 1 20 | 0 28 | 0 32 | | 0 18 | 12 | 13 0 | 12 17 | 11 71 | 2 41 | 12 17 | 11 71 | Basirhat | |
| | | | 1 98 | 2 01 | 2·15 | 1·11 | 0 21 | 0 48 | 0·14 | 9 | (n) | 10 28 | (n) | 2·15 | 10 28 | (n) | Gosaba | |
| | | | 2 17 | 0 18 | | 0 05 | 0 01 | | 0 17 | 6 | 12 4 | 4 13 | 9 72 | 2·17 | 4 13 | 9 72 | Ranaghat | Nadia |
| | 1 49 | | 0·86 | 0·94 | 9 46 | 0·02 | | 0·05 | 0 05 | 8 | 12 6 | 8 23 | 10 01 | 1·49 | 6 23 | 10 01 | Krishnagar | |
| | 1 73 | | | 2 10 | 0 48 | 0 15 | 0 12 | 0 03 | 0 37 | 9 | 13 0 | 7 81 | 10 41 | 2 10 | 7 81 | 10 41 | Chuadanga | |
| 1 70 | | | 0·25 | 0·28 | 0 15 | 0·25 | 0 05 | 0 25 | 0 05 | 11 | 12 9 | 5 9[illegible] | [illegible] | 1 70 | [illegible] | 10 22 | [illegible] | |
| 0 15 | | | 0 14 | 0 41 | 0 21 | | | 0 29 | 0 18 | 8 | 13 7 | [illegible] | | 0 52 | 2 26 | 11 [illegible] | [illegible] | |
| | | | | 0 17 | 0 05 | 0 01 | | 0 36 | 0 02 | 7 | 9 9 | [illegible] | | 0 95 | 2 42 | 7 | [illegible] | |
| | 0 26 | | 0 34 | 1 28 | 0 14 | 0·60 | 0 75 | | 0 55 | 11 | 12 7 | 7 99 | 10 47 | 2 50 | 7 99 | | | Murshidabad |
| | 1·00 | | 0 15 | 0 27 | 0 70 | 0·10 | 0 42 | | 0 70 | 9 | 12 2 | 3 91 | 9·89 | 1 30 | 3 91 | | [illegible] | |
| | 1 69 | | 1 47 | 1 79 | 0·96 | 0 11 | 0 40 | 0 03 | 0 15 | 9 | 11 9 | 7 38 | 10 39 | 1 79 | 7 38 | | | |
| 1 11 | 0·01 | 1 13 | 1·62 | 0 81 | 0 04 | 0 85 | 0 02 | 0 48 | 0 40 | 11 | 12 0 | 7 07 | 10 30 | 1 62 | 7 07 | | [illegible] | |
| 0 29 | 0 16 | 0 15 | 0 18 | 1 06 | 0 16 | 1 05 | 0 29 | 0 51 | | 11 | 12 0 | 4·69 | 10 13 | 1 06 | [illegible] | | [illegible]pur | |
| 0 03 | 0 05 | 0 89 | 0 15 | 1 77 | | 0 54 | 0 22 | 0 02 | 0 11 | 13 | 12·7 | 8 39 | 10 07 | 2·00 | | | Lalgola. | |
| | | | | 1 21 | 0 73 | 0 20 | 0 63 | 0 15 | 0 09 | 10 | 12 1 | 5 94 | 11 35 | 1 [illegible] | [illegible] | | Akhigang (*Murshidabad*) | |
| 0 35 | | 0 11 | | 0 20 | 0 10 | 0 72 | | 0 78 | 0 03 | 10 | 10·8 | 4 83 | 9 69 | | 4 83 | 9 69 | Patkabari | |
| 0 25 | | 0 30 | 0 10 | 0 09 | 0 10 | 0 70 | 0 26 | 0·15 | 0 47 | 11 | 12 1 | 4 62 | 10·48 | [illegible] | [illegible] | 10 48 | Dumkal | |
| | 0 53 | | 0 55 | | | 0 02 | 0 40 | | 0 05 | 8 | 11 8 | 4 16 | 12 02 | [illegible] | [illegible] | 12 02 | Kalliyanganj (*Ishanpur*) | |
| 0 54 | | | 1 12 | 1 14 | 0 70 | 0 34 | 0 10 | 0 26 | 0 12 | 13 | 14 0 | 7 29 | | 2 07 | 7·23 | 11 88 | Narail | Jessore |
| 4 72 | | | 1·04 | 0 55 | 0 12 | | 0 53 | 0 44 | 0 46 | 9 | [illegible] | [illegible] | 10·36 | 4 [illegible] | 9 15 | 12 36 | Jessore | |
| | 0·28 | | | 2 85 | 1 04 | 0 29 | 1 11 | 0 38 | [illegible] | [illegible] | [illegible] | [illegible] | 12 86 | [illegible] | 9 71 | 12 85 | Jhenida | |
| | 3 00 | | | 1 00 | 1 30 | | | | [illegible] | [illegible] | [illegible] | 8 71 | 11 04 | [illegible] | 8 71 | 11 04 | Magura | |
| | | | | 0 35 | 0 1[illegible] | 2 57 | 0·07 | [illegible] | 0 25 | | 18 1 | [illegible] | [illegible] | [illegible] | 9 62 | 10 49 | Bongaon | |
| 0 01 | 0 [illegible] | | | 2·06 | 0·30 | 0 10 | 1 01 | 0 10 | | 9 | 13 8 | 9 73 | 11 [illegible] | 2 66 | 9 72 | 11 86 | Satkhira | Khulna |
| | | | | 0 13 | 0 73 | 0 85 | 1 35 | 0 78 | 1·03 | 8 | 15 6 | 6·09 | [illegible] | 1·35 | 6 09 | 14 27 | Bagerhat | |
| 0 02 | 0 35 | | | 0 12 | 0 37 | 1 77 | 0 45 | 0 03 | 0 36 | 7 | 15 3 | 4 01 | [illegible] | 1 77 | 4 01 | 12 70 | Khulna | |
| 0 90 | | 1 95 | 0 22 | 1 10 | 4 00 | 4 80 | 1 60 | 0 20 | 0 50 | 12 | 12 6 | 16 08 | 2·36 | 4 80 | 16 08 | 11 36 | Kaliganj | |
| | | | | 3 80 | 3 20 | 3 20 | 0 50 | 0 05 | 0 10 | 7 | 12 7 | 12 63 | [illegible] | 3 80 | 12 63 | 12 86 | Nakipur | |
| 1 38 | | | 0 95 | | 1 43 | 1·06 | 0 60 | | 0 42 | 7 | 13 8 | 7 [illegible] | 12 31 | 1 43 | 7 04 | 12 31 | Dumuria | |
| 0 37 | | | 0·05 | 1 85 | 0·38 | 1 27 | 0 70 | 0 05 | 1 00 | 8 | 17 7 | [illegible] | 12 58 | 1 85 | 6 94 | 12 58 | Rampal | |
| | | | | 1 87 | 0 50 | 0 44 | 0 26 | | 0 29 | 9 | 13 8 | [illegible] | 10 93 | 1 37 | 4 [illegible] | 10 93 | Kalaton | |
| 0 10 | 0 30 | 1 10 | 0 78 | 1 70 | 2 50 | 2 60 | 0·60 | | 0 23 | 13 | 13 9 | [illegible] | 12 01 | 2 60 | 11 16 | 12 01 | Paikgachha | |
| | 1 79 | | 0 9[illegible] | 0 35 | 0 41 | 0 90 | 0 75 | 0 59 | 0 57 | 11 | 13·4 | 9 [illegible] | 14 [illegible] | 1 79 | 9 30 | 14 53 | Mollahat | |
| 0 55 | | 0 15 | | 1 36 | 1 42 | 2 60 | 3 40 | 1 05 | 1 75 | 11 | 15 4 | 14 80 | 15 18 | 3 10 | 14 80 | 15·18 | Morelganj | |
| | | | 0 58 | 2 98 | 1 30 | 3 26 | 1 06 | 0 36 | 0 64 | 9 | [illegible] | 11 88 | 11 32 | 3 26 | 11 88 | 11 32 | Tala | |
| | 0 34 | | 0·10 | | 0·02 | | | | 0 09 | 7 | [illegible] | 4 39 | 10 18 | 1·10 | 4 19 | 10 18 | Kalna | Burdwan |
| | 0 03 | | 4·66 | | 0 17 | 6 20 | 0 04 | 0·15 | 0 07 | 9 | [illegible] | 6 27 | 9 68 | 1 66 | 6 27 | 9 68 | Burdwan | |
| | 0 15 | | 1 55 | 0 37 | | 0 32 | 0 12 | | 0 56 | 10 | [illegible] | 4 52 | 10 01 | 1 55 | 4 52 | 10 01 | Katwa | |
| | | | 0 10 | 0 45 | 1 00 | 0 26 | 0 08 | 0 43 | 2 35 | 10 | 12 2 | 5 5[illegible] | 9 68 | 2 35 | 5 55 | 9 68 | Asansol | |
| | | | | | | | | | | [illegible] | 10 7 | | 9 80 | | | 9 80 | Mankai | |
| 0·40 | | [illegible] | 0 60 | | | | | | 6 10 | [illegible] | 15 7 | 2 70 | 15 00 | 0 60 | 2 70 | 15 00 | Mangalkot | |
| | | | 2 20 | | | | | | | [illegible] | (n) | 5 05 | (n) | 2 20 | 5 05 | (n) | Raina | |
| | | | | | | | | | | [illegible] | (n) | | (n) | | | (n) | Monteswar | |
| 0 48 | 0·81 | | 0 11 | 0 02 | 0 03 | 0 13 | 0·09 | 0 55 | 0 | | 12 0 | 2 83 | 10 65 | 0 55 | 2 83 | 10 65 | Suri | Birbhum |
| | | | | | | | | | | | 12 3 | | 10 31 | | | 10 31 | Hetampur | |
| | | | 0 35 | 00 2 | 0 02 | 0 06 | 0 30 | | | | 11 7 | 3 41 | 10 43 | 0 75 | 3 44 | 10 43 | Rampurhat | |
| | | | 0 58 | 0 30 | 0 28 | 0 42 | | | | | 11 4 | 6 68 | 9 18 | 4·23 | 6 68 | 9 18 | Bolpur | |
| | | | 1 00 | 1 15 | | 0·50 | 0 22 | 0 | | 0 | 12 4 | 7 57 | 11 85 | 2 90 | 7 57 | 11 85 | Murarai | |
| | | | | | 1 16 | 0 47 | | | | 7 | 12 1 | 2 86 | 10 69 | 1 16 | 2 86 | 10 09 | Labpur | |
| | | 0 24 | 0 75 | 1 68 | 0 82 | 0 96 | | | | 11 | 11·9 | 6 45 | 10 11 | 1 68 | 6 45 | 10 11 | Bankura | Bankura |
| | | 0 42 | 1·12 | 1 25 | 0·09 | 0 45 | | | 1·72 | 12 | 11 5 | 10 75 | 9 81 | 3 72 | 10·75 | 9 81 | Vishnupur | |
| | | | 0 55 | 0 75 | 0 70 | 0 56 | | | 2 00 | 6 | 11 9 | 5 32 | 9 71 | 2 00 | 5 32 | 9·71 | Maliara. | |
| | | 0 20 | 0 19 | 0 45 | 0 24 | | | 0 60 | 0 15 | 12 | 12 2 | 9 91 | 10·84 | 8 60 | 9·91 | 10 84 | Khatra. | |
| | | | 2 34 | | 0 04 | 0 05 | | 0 09 | 1 32 | 3 | 11 6 | 4 18 | 9 13 | 2 34 | 4 18 | 9 13 | Indas | |
| | | | 1 30 | | 1·10 | | | 0 40 | 1 89 | 6 | 10 7 | 7·46 | 9 96 | 2 40 | 7 46 | 9 96 | Kotalpur. | |
| | | | | | | | | | | | 10 4 | | 8 13 | | | 8 13 | Onda | |
| 13 | | 0 10 | 2 17 | 0·03 | 2 55 | 0 07 | 0 02 | 0 17 | 0 46 | 8 | 11 1 | 6·50 | 10 38 | 2 55 | 6 50 | 10 38 | Gangajalghati | |
| | | | 1·55 | | 1 05 | 0 08 | | 0 10 | 1 85 | 8 | 11 4 | 7 19 | 10·04 | 1 85 | 7 19 | 10 04 | Raipur | |
| | | | | | | | | | | | 10 5 | | 9 40 | | | 9 40 | Sonamukhi | |
| | 1 06 | 0 15 | 0·30 | 0 11 | | 0 19 | 0·06 | 0 81 | 0 02 | 8 | (n) | 4 53 | (n) | 1 06 | 4 53 | (n) | Taldanga | |
| | | | | | | | | | | | (n) | | (n) | | | (n) | Saranga | |
| | 0 07 | 0·32 | 0·77 | 0·20 | | 2 00 | 0 56 | 0 95 | 0 38 | 12 | (n) | 8 80 | (n) | 2·00 | 8 80 | (n) | Indpur | |
| | 0 12 | 0 50 | 0 02 | 0·35 | 0·04 | 0·35 | 0·17 | 0 46 | 0 42 | 10 | (n) | 3 16 | (n) | 0 52 | 3 16 | (n) | Arbra | |
| | | 1 15 | | 1 46 | 0·02 | | 2·98 | 0 82 | 0·12 | 6 | (n) | 6 82 | (n) | 2 98 | 6 82 | (n) | Barjora. | |
| | 0·82 | 0·15 | 0·71 | 1 33 | | | 0 70 | 0 16 | | 12 | (n) | 7 33 | (n) | 1 33 | 7 33 | (n) | Simlapal | |
| | | | | | | | | | | | (n) | | (n) | | | (n) | Mejia | |
| | | 1·30 | | 1·79 | 0 90 | | | 2 58 | 0·06 | 8 | (n) | 9 25 | (n) | 2 58 | 9 25 | (n) | Sironmalpur | |
| | [illegible] | 2 30 | 2·30 | | 0 30 | [illegible] | 1 20 | | 0 80 | 7 | (n) | 7 68 | (n) | 2 30 | 7 68 | (n) | Palasdanga. | |
| | | | | | | | | | | | (n) | | (n) | | | (n) | Chatna | |
| | | 0 31 | 0 07 | | 0·25 | [illegible] | 0 50 | 1 60 | 0·80 | 10 | (n) | 6·69 | (n) | 1 60 | 6 69 | (n) | Ranibandh | |
| | 1 23 | 0 40 | 0 50 | 0 50 | [illegible] | 0 86 | 0 24 | 0 71 | 0 11 | 10 | (n) | 4 80 | (n) | 1 23 | 4·80 | (n) | Saltora | |
| | | 1 10 | | | | | | 0·92 | | 7 | (n) | 4·02 | (n) | 1 22 | 4 08 | (n) | Joypur | |
| 15 | 0·64 | 0·25 | | 0 15 | | 0·54 | 2 30 | 0 20 | | 13 | (n) | 5 79 | (n) | 2 30 | 5 79 | (n) | Ambikanagar | |
| | | 1 20 | 1·01 | 1 30 | 0·06 | [illegible] | [illegible] | 0·65 | 0·27 | 7 | (n) | 7·97 | (n) | 1·85 | 7 97 | (n) | Jairampur (*Radhanagar*) | |

| DIVISION | DISTRICT | Station | 1 | | | | | | | | | | | | | | | 17 | 18 | 19 | 20 |
|---|---|---|---|---|---|---|---|---|---|---|---|---|---|---|---|---|---|---|---|---|---|
| BURDWAN—*concld.* | Midnapore | Contai | | | | | | | [illegible] | [illegible] | | | | | | | | 0 23 | | 0·07 | | |
| | | Tamluk | | 1·14 | | | | | | | 1 30 | • | 0 02 | | | | | 0 28 | | 3 12 | | |
| | | Midnapore | | | | | | | | 1·06 | • | | 0·28 | | | • | | 0 51 | | 0·92 | 0·02 | 0 01 |
| | | Ghatal | | | | | | | | 1 55 | | | 0·02 | | | | • | 0 50 | 0 11 | 1 47 | | |
| | | Kukrahati | | 0 12 | | | | | | 0 35 | | | 0 11 | | | • | • | 0·25 | | 1 76 | | |
| | | Amlagura | | 0·20 | | | | | 0 70 | | ... | 0 55 | | | • | • | 0 70 | | | 0 10 | 0·03 | ... |
| | | Panskura | | 0·5[illegible] | | | | 0 24 | | 0 80 | | .. | 0 25 | | | • | | 0 05 | | 0 10 | | |
| | | Dantan | | | | | | | | 0 20 | | | | | ... | • | | | .. | | • | |
| | | Chaudrakona* | | | | | | | | | | | | | | | | | | | | |
| | | Pachet | | | | | | .. | | 0 13 | | | | | | • | • | • | | 0 26 | | |
| | | Bhagwanpur | | 0·24 | | | | | | 0 56 | | | | .. | | | | 0 04 | | 0 19 | | |
| | | Kultikri | | | | | 1 30 | | | 0 30 | | 1 10 | • | | | | | | • | | | |
| | | Nayabasan | | | | | • | | | | • | | 0 08 | | • | | | | | | | |
| | | Silda (*Belpahari*) | | 0 40 | | | | | | 0 35 | | | | | • | | | | • | 0 26 | 0 56 | |
| | | Chandri* | | | | | | | | | | | | | | | | | | | | |
| | | Goaltore | | | | | | | | 0·23 | | 0 45 | 0 93 | | | | | 1·03 | | 0·29 | | |
| | | Salboni | | 0 [illegible] | | | 0 18 | | | | | 1 20 | | | | 0 18 | | | 0 59 | | 0 17 | |
| | | Narayangarh | 92 | | | | 0 30 | | | | | | 0 30 | | | | | | | | | |
| | | Ramnagar | | | | | | | | 0 11 | • | 0 02 | | | | | | | | 0 13 | | |
| | | Mohanpur | | | | | | | | | | | | | | | | 0 30 | | | | |
| | | Henria | | | | | | | | | | | | | | | | | | | | |
| | | Junka (Kha[illegible]) | | | | | | | | 0 36 | | | | | | • | | 0·02 | | | | |
| | | Nandigram | | | | | | | 0 20 | | | | | | | | | | | | | |
| | | Moyna | | 0 05 | | | | 0 33 | | 0 53 | | | 0·38 | | | | | .. | | 3·05 | | |
| | | Pingla | | 0 20 | | | | | | | | | | | | ... | | | | 3·05 | | |
| | | Narajole* | | 0 04 | | | | | | | | | | | | • | | | | | | |
| | | Jhargram | | 0 [illegible] | | | | | | 1 39 | | • | | | | | | | | 1 30 | 0·30 | |
| | | Balichak | | 0 [illegible] | | | | 1·83 | | 0 30 | | | 0 14 | 0·04 | | | | 0 20 | | 1 75 | | |
| | | Daman | | 0 02 | | | | | | 1 34 | | | | | • | | | 0 67 | 0 15 | 1 50 | | |
| | | Kharagpur | | | 0 7[illegible] | | 95 | | 1·10 | | | 0 38 | | | .. | | | | 1 33 | | • | |
| | Hooghly | Serampore | | | | 0 16 | | | | 0·29 | | | 0 01 | | | | | 0 04 | 0 53 | 0 64 | | 0 20 |
| | | Hooghly | | | | | | | 0 38 | | | | | | | | 0 12 | 0 55 | 0 27 | | | |
| | | Arambagh | | 0 15 | | | | | | | | | | .. | | | | 0 56 | 0 61 | 0 01 | | 0 24 |
| | Howrah | Howrah | | | | 2[illegible] | | | 0 20 | [illegible] | | | 0 11 | 0 01 | | | | 0·02 | 1·17 | 0 07 | | 0 33 |
| | | Mohesreka* | | | | | | | | | 0·07 | | | | | | | 0·22 | 0 13 | 1 34 | | |
| | | Uluberia | | | | 0 | | | | | | | | | | | | 1 40 | 0 62 | 0 41 | | 0 30 |
| | | Amta | | | | 0 5[illegible] | | | | | | | | | | | | 2 10 | 1 10 | 2 50 | | 0 35 |
| RAJSHAHI | Boalia | Boalia | | | | 0 63 | | 0 41 | 0·63 | | | 0 09 | | | | | | 0 32 | 0 39 | | | 0 50 |
| | | Nator | 0 25 | | | | | | 0 72 | | | | | 0 04 | • | | | 2 53 | 0 22 | 0·07 | | |
| | | Naugaon | 0·35 | 0 24 | | | 20 | • | 0 55 | | • | 0 38 | | | | 0 21 | | | 1·02 | 0 03 | 0 18 | 0 04 |
| | | Bilmaria | | | | 0 35 | | | | 2·13 | | 0 [illegible]8 | | | • | | | 0 10 | 0 20 | 0 18 | | |
| | | Manda | | | | | | | 2 70 | | | | | | | | | 0 50 | 1 00 | | • | 0 90 |
| | | Mahadebpur* | | | | | | | | | | | | | | | | | | | | |
| | | Tanor | | | | | | 38 | • | 1 25 | | | | | | 0 35 | 0 01 | 1 02 | 0 41 | | | |
| | | Chaugram | | | | | | | | | | | | | | | | 0 35 | 0 55 | 0 25 | 1 40 | |
| | | Joari | | | | | | | 0 12 | | | | | 0 06 | | | | 2 27 | 0 48 | 0 20 | • | |
| | Dinajpur | Nithpur | 0 72 | 2 50 | | | | 1 85 | | | | | 0 14 | | | | | | 1 40 | 0 60 | | |
| | | Nawabganj | 1 40 | • | | | | • | [illegible]69 | [illegible] | | 1 35 | 2 44 | | | | • | 1 25 | 3 31 | 2 80 | | 1 23 |
| | | Gangarampur | 1 31 | 0 47 | | | | | 0·21 | | | 0 58 | 1 07 | 0 06 | | | | 0 31 | 2 24 | 2 27 | 0 19 | 0 97 |
| | | Churamon | 4 70 | | | | | 2·60 | | | | 1 20 | | | | | | 1 65 | 0 84 | 2 72 | | 1 35 |
| | | Raiganj | 3 60 | 1 15 | | | | • | 2 75 | | | 1 97 | 2 17 | | | | | 0 63 | 2 68 | 0 [illegible]7 | 3 07 | |
| | | Dinajpur | 1 60 | | | | | | 1 20 | | | 0 07 | 2 63 | | | | | 0 42 | 4 20 | 1 54 | 0 30 | 1 22 |
| | | Balurghat | 4 65 | 0 95 | | | | | | | 2 7[illegible] | | 2 70 | | | ... | | 0 42 | 3 90 | 0·62 | 2 50 | 1 33 |
| | | Thakurgaon | 0 20 | 0 76 | | | 2 26 | | • | | | 0 80 | | | | ... | | 1 37 | 1 52 | 0 81 | 0 35 | 0 27 |
| | | Setabganj | 0 95 | | | | 0 25 | | | | | | 1 40 | | | | | 0·85 | 3 50 | 1 35 | .. | 2 25 |
| | | Ramganj* | | | | | | | | | 0 | | | | | | | | | | | |
| | | Atwari | | | | | | 0 91 | • | 0 70 | | | 0·61 | 0 55 | | 0 01 | | 0·01 | 2 70 | 0 90 | 0 20 | 6 30 |
| | | Birganj | 3 63 | | | | 1 50 | | | | | | 1 92 | | | | | 1·05 | 1 82 | 0 83 | 0 55 | 1·14 |
| | | Parbatipur | 3 57 | 0·08 | | | 0 15 | | | | | 2 75 | 2 27 | | | | | 0 52 | 5 51 | 0 38 | 1·00 | 0 82 |
| | Jalpaiguri | Jalpaiguri | 0 70 | | | | | | | | 0[illegible] | 3·10 | 1·05 | 0·95 | 0 23 | | 2 40 | 4 05 | 1 85 | [illegible]10 | | 3 95 |
| | | Alipur Duars | 1 54 | | | | | | | | 0[illegible] | | | 0 62 | 3 28 | 3 74 | 4 46 | 3 12 | 2 40 | 2 43 | 0 21 | 1·25 |
| | | Falakata | 0 25 | | | | | | | 0 26 | 0 [illegible] | | 0 51 | 1·54 | 3 20 | 0 30 | 4 37 | 2 52 | 1 54 | 0 86 | 0 22 | 0 53 |
| | | Debiganj* | | | | | | | | | | | | | | | | | | | | |
| | | Bhagatpur (*Nagrakata*) | 0 01 | | | | 0 25 | 0 75 | 0·04 | | 2 7[illegible] | | 1 54 | 0 35 | 0·27 | 0·22 | 5 25 | 2 56 | 1 45 | 0·28 | 1·60 | 0 45 |
| | | Buxa | | | | | 1 36 | 0 17 | | 0 23 | 0 78 | | | 2·35 | 3 27 | 5 13 | 4 08 | 1 15 | 0 72 | 3 37 | 0 84 | 0·03 |
| | | Kalchini | 0 12 | | | | 1 15 | 0·28 | | | 0 1[illegible] | | | 1 78 | 3 34 | 2 28 | 5 79 | 2·03 | 2 45 | 0 37 | 1 58 | 0·26 |
| | | Kumargram (*Bhalka*). | 0 30 | | | | | | | | 0·00 | | | 1 86 | 1 35 | 4 65 | 6 18 | 2·28 | 1 38 | 0 62 | 4 60 | 0 80 |
| | Darjeeling | Siliguri | 0 95 | | | | 0 45 | 0 20 | | | 4 75 | 3 [illegible] | | | 1·05 | 1 15 | 4 50 | 1 40 | 4 70 | | | 0·95 |
| | | Darjeeling | 0 21 | 0 66 | 00·2 | | 0 39 | 0 30 | • | | 0 15 | 0 4[illegible] | | | 0·02 | • | 0 97 | 0 19 | 0 93 | 1·46 | 0 12 | 0·02 |
| | | Kalimpong | 0 19 | 0 10 | | | | 0 10 | ... | | 0 24 | 0 [illegible] | | | 0·02 | 0 01 | 3 29 | 0 26 | 2 73 | 1·75 | 0·03 | 0·17 |
| | | Mongpoo | 0 71 | 0 21 | 0 02 | | | | 0 13 | | 0 03 | 2 60 | | | 0 06 | 0 04 | 1 80 | 4·[illegible] | 3 40 | 1·66 | • | 0·03 |
| | | Kurseong | | 0 44 | | | | 0 54 | | | .. | 2 39 | | | 53 | 0·03 | 1·49 | 0 95 | 2 56 | 0 49 | 0 09 | 0 98 |
| | | Pedong | 0 10 | 0 14 | 0 01 | 0 03 | 0 08 | 1 12 | 0·05 | 0·01 | 0·07 | 1 78 | 0 20 | | ·19 | 1 12 | 0·75 | 0·91 | 1 90 | 2 72 | 0·04 | 0 65 |
| | | Jalapahar | 0 23 | 0 66 | 0 02 | | 0·39 | 0 30 | | .. | 0·15 | 0 46 | 0 33 | | ·02 | • | 0 97 | 0 19 | 0 93 | 1 45 | 0 12 | 0 02 |
| | Rangpur | Bhawaniganj (*Gaibandha*) | 1 57 | 0 22 | | | | | | .. | | 0 55 | 2 73 | • | 0·01 | | | 0·88 | 4 13 | 4 10 | | 1·13 |
| | | Rangpur | 2 47 | | | | 0 01 | | 0 34 | | | | 0 11 | | • | | 0·01 | 0·29 | 2·93 | 2 75 | 0·18 | 0 46 |
| | | Pirganj | 2 00 | • | 0·10 | • | • | • | 0 15 | | | 0 94 | 3·60 | | 0 10 | | | 0 80 | 5 60 | 6 15 | 0·40 | 3 80 |
| | | Kurigaon | 0 66 | 0·02 | | | | | • | | • | 2·01 | 0·42 | 0 01 | | 0·07 | 0 19 | 1·34 | 1·92 | 0·13 | 0 06 | 0·03 |
| | | Gobindganj* | | | | | | | | | | | | | | | | | | | | |
| | | Bagdogra (*Nilphamari*) | 3 20 | | | • | 0 39 | | • | .. | | | 0·39 | • | | | | 0 54 | 1·57 | 0·78 | • | 0·50 |
| | | Ulipur* | | | | | | | | | | | | | | | | | | | | |
| | | Sunderganj | 0·54 | | | | • | • | .. | | | .. | 0 46 | | ... | | • | 0 34 | 3·83 | 1·58 | ... | 1 06 |
| | | Saidpur | 3 77 | | | .. | 0 70 | | | | | | 0 81 | ... | • | • | .. | 0 67 | 2 75 | 0·61 | 0·75 | 0·79 |
| | Bogra | Sherpur | 1 16 | • | | | | • | | | | 0·74 | .. | | | .. | | 2 05 | 0 48 | .. | 0·10 | ... |
| | | Nowkhilla | | | | | | | | | | | | | | | | | | | | |
| | | Bogra | 2 48 | 0·11 | | | | • | • | .. | | | 0·72 | | .. | 0 40 | | 0·10 | 2·94 | 0 60 | ... | ... |
| | | Panchbibi | 1 10 | • | .. | • | .. | | | ... | | 0·72 | .. | 0·05 | | | 0 42 | 1 50 | • | 2·83 | 0·55 | 0·45 |
| | | Khetlal | 0 85 | | | 0·30 | | 0 10 | • | 0 75 | • | • | 0·45 | .. | | ... | | 0·95 | 1 15 | .. | 4·75 | 1 85 |
| | Pabna | Shahzadpur | | | | 0 33 | | ... | ... | • | | • | 0 06 | | 0·03 | 0 46 | • | 0·04 | 0 75 | 0 59 | 0·11 | 0·05 |
| | | Pabna | | 0·02 | | | | • | • | 0·07 | | .. | • | • | | ... | .. | 1·07 | 0·37 | 0 22 | 0·02 | 0·21 |
| | | Sirajganj | 0·02 | 0·05 | | • | | | .. | | | | 0 05 | 0·01 | .. | 0·23 | | 0 39 | 2·14 | 1·43 | 0 01 | ... |
| | | Sara* | | | | | | | | | | | | | | | | | | | | |

* Returns not received.

| | | | | | | | | | | Num[illegible] da[illegible] | | | | | | | | District | Division |
|---|---|---|---|---|---|---|---|---|---|---|---|---|---|---|---|---|---|---|---|
| | | | 0 41 | 0 03 | 0 33 | 0 21 | 0 20 | 0 13 | 0 34 | 8 | 11 0 | 2 25 | | | | [illegible] | Contai | Midnapore | BURDWAN—concld. |
| | 0 77 | 1 62 | 0 21 | 0 42 | | 0 73 | 0 10 | | | 11 | 11 3 | 0 01 | | | | 10·09 | Tamluk | | |
| | | 0 91 | 0 37 | 0 11 | 0 07 | 0 43 | 0 37 | 1 83 | 0 66 | 12 | 12 1 | 8 | | | | 9 65 | Midnapore | | |
| | 0 18 | 0 37 | 0 35 | 0·08 | 0 42 | | | 1 32 | 1 10 | 10 | 11 7 | 7 [illegible] | | | 7 47 | 9 92 | Ghatal | | |
| | 0 25 | | 0 67 | 0 25 | 0 15 | 0 40 | 0 06 | 0·37 | 0 32 | 13 | 12 6 | 5 33 | | | [illegible] | [illegible]65 | Kukrahati | | |
| | 0 80 | 0 70 | | 0 43 | | | 0 10 | | 3 60 | 10 | 11 4 | 7 91 | | | [illegible] | [illegible]32 | Amlagura | | |
| | | 2 00 | 0 15 | 0 10 | 0 12 | 0 36 | 0 10 | | | 11 | 12·2 | 4 77 | 10 [illegible] | | [illegible]77 | [illegible]35 | Pauskura | | |
| | 0 20 | 1 25 | 0 43 | 0 6[illegible] | 0 30 | 0 30 | | | | 7 | 11 3 | 3·28 | 9 65 | 1·25 | 3·2[illegible] | [illegible] | Dantan | | |
| | | | | | | | | | | | 13 4 | | 13 57 | | | | Chandrakona | | |
| | 0 81 | 3 01 | 0 31 | 1 12 | 0 58 | | | 0 30 | | 7 | 12·3 | 3·58 | 12 55 | 1 12 | 3 58 | [illegible] | Pachetgarh | | |
| 0 08 | 0 15 | 0 21 | 0 65 | 0·25 | 0·09 | 0·08 | 0 58 | 1·22 | 0 17 | 10 | 14 4 | 4 51 | 14 50 | 1 22 | 4 50 | [illegible]60 | Bhagwanpur | | |
| 0 73 | 1 25 | 1 02 | 0 32 | 0 20 | | | 0 35 | 0 10 | | 10 | 10·0 | 6 08 | 9·11 | 1 30 | 6 68 | 9 11 | Kaltikri | | |
| | | 2·05 | | | | | | | | 2 | (n) | 2 13 | (n) | 2 05 | 2 16 | (n) | Nayabasan | | |
| | | 0 04 | 0 60 | 0 18 | | | 0·08 | 1 54 | 1 10 | 8 | 12 0 | 5 11 | 8 84 | 1 54 | 5 11 | 8 84 | Silda (*Belpahari*) | | |
| | | | | | | | | | | | (n) | | (n) | | | (n) | Chand[illegible] | | |
| | | | 1 65 | 0 29 | 1 31 | | | 0 88 | 1 06 | 10 | 13 5 | 7·88 | [illegible] | 1·06 | 7 88 | 8 77 | Goal[illegible] | | |
| | 0 74 | 0 38 | 0 20 | 0 40 | | | 0 90 | 0 84 | 0 25 | 14 | 12 8 | [illegible] | [illegible] | 0 90 | 5 98 | 8 81 | [illegible] | | |
| | | | | | | | | | | 3 | 12·0 | 1 [illegible] | | 1 20 | 1 80 | 13 77 | [illegible] | | |
| | | 0 22 | 0 30 | | 0 14 | 0 41 | 0 19 | 0 07 | 0·17 | 9 | 12 0 | 1 74 | [illegible] | 0 41 | 1 74 | 11 11 | [illegible] | | |
| 0 40 | 0 78 | 0 10 | 0 60 | 2 45 | | | 1 29 | 0 30 | 0 10 | 9 | 10·8 | 6 14 | [illegible] | 1 29 | 6 14 | 9 96 | [illegible] | | |
| | 0 21 | | | | 0 53 | | | 0 57 | | 2 | 10 5 | 1 10 | 12 45 | 0 57 | 1 10 | 12 1[illegible] | [illegible] | | |
| | | | 0 50 | 0 87 | 0 62 | 0 80 | 0 44 | 0 70 | 0 30 | 9 | 13 9 | 4 75 | 14 86 | 0 87 | 4 75 | 14 [illegible] | [illegible] | | |
| | | 0 02 | | | | 0 05 | 0 10 | 0 05 | 0 20 | 4 | 15·4 | 0·82 | 13 48 | 0 20 | 0·82 | 1[illegible] | [illegible] | | |
| 0 34 | 0 30 | 0 5[illegible] | 0 54 | | 0 20 | | 0 10 | 0 45 | 0 03 | 13 | 11 9 | 6·90 | 9 58 | 3 05 | 6 90 | | [illegible] | | |
| 0 34 | 0·30 | 0 [illegible]0 | 0 54 | | | | | | | | 13 0 | | 12 56 | | | 12 | [illegible] | | |
| | | | | | | | | | | | 13 3 | | 16 15 | | | | [illegible] | | |
| | 1 59 | 0 22 | 0 74 | | 0 20 | | 1 32 | 0 67 | | 10 | (n) | 8 10 | (n) | 1 50 | 8 10 | (n) | [illegible]arpur | | |
| | | 0 96 | 0 18 | 0 10 | 0 35 | 0 05 | 0 19 | 1 31 | 0 97 | 13 | (n) | 8 62 | (n) | 1 83 | [illegible] | [illegible] | Salichak | | |
| | 0 96 | 0 11 | 0 34 | 0 21 | 0·25 | | | 1 89 | 2 11 | 11 | (n) | 9 55 | (n) | 2 11 | [illegible] | [illegible] | Dainan | | |
| | | 0 73 | 0 15 | 1 00 | | 0 55 | 0 10 | 1 40 | | 10 | (n) | 7 59 | (n) | 1 4[illegible] | [illegible] | [illegible] | Kharagpur | | |
| | 0 28 | 0 01 | | 0 09 | 0 13 | 0 06 | 0 02 | 0 15 | 0 01 | 8 | 12 1 | 2 62 | 10 20 | [illegible] | 2 6[illegible] | 10 20 | Serampore | Hooghly | |
| 0 14 | | | | 2 64 | | 0 12 | 0 15 | 0 12 | | 9 | 12 2 | 4 78 | 9 80 | [illegible] | [illegible] | 9 80 | Hooghly | | |
| | | | 0 38 | 0 02 | 0 0[illegible] | | 0 33 | 0 13 | 1 66 | 7 | 12 2 | 4 49 | 9 80 | [illegible]66 | [illegible] | 9 80 | Arambagh | | |
| 0 41 | 0 17 | 0 09 | 0 02 | 0 17 | 1 13 | 0 84 | 0 02 | 0 11 | 0 07 | 9 | 12 5 | 5 15 | [illegible] | 1 17 | [illegible]15 | 11 02 | Howrah | Howrah | |
| 2 83 | 0 34 | 0 27 | 0 15 | 0 23 | 0 19 | 0 08 | 0 20 | 1 15 | 0 07 | 10 | 12 [illegible] | [illegible] | [illegible] | 2 83 | 7 59 | 11 29 | Mohesrekha | | |
| 0 32 | 0·08 | 0 28 | | 0 40 | 0 30 | 0 13 | 0 03 | 0 17 | 0·26 | | | | 10 91 | 1 10 | 5 05 | 10 91 | Uluberia | | |
| 0 23 | 0 86 | 0 42 | 0 25 | | 1 10 | | | | | | | 11 62 | 11 52 | 2 5[illegible] | 11 62 | 11 52 | Amta | | |
| 0 01 | 0 20 | 0 10 | | 0 70 | 0 16 | 0 11 | 0 58 | 0 12 | 0 27 | 14 | 12 5 | [illegible] | 10·42 | [illegible] | 5 14 | 10 12 | Boalia | Boalia | RAJSHAHI |
| | 0 20 | | 0 03 | 4 96 | 0 61 | 0 10 | 0 09 | 1 70 | 0 21 | 11 | 12 1 | 10·41 | 11 07 | [illegible]96 | 10 11 | 11 07 | Nator | | |
| 0 30 | | | | 0 38 | 0 07 | 0 05 | 0 20 | 0 32 | 0 46 | 11 | 12 9 | 4 57 | 12 54 | 1 02 | 4 57 | 12 51 | Naugaon | | |
| | 0 15 | | | 2·16 | 1 34 | 3 72 | 0 12 | 0·10 | 0 72 | 13 | 11 5 | 12 24 | 10·4[illegible] | 3 72 | 12 24 | 10 44 | Bilmaria | | |
| | | | 0 60 | | 0 50 | 0 21 | | 0 61 | 1 05 | 10 | 11·4 | 8 37 | 10[illegible] | 2 70 | 5 37 | 10 59 | Manda | | |
| | | | | | | | | | | | 12 8 | | | | | 11·78 | Mahadebpur | | |
| 0·08 | 1 25 | 1 04 | 0 08 | 0 20 | 0 50 | 0 32 | 1 35 | | 1 10 | 11 | 12 2 | 9·29 | [illegible]66 | 1 25 | 9 29 | 10 56 | Tanor | | |
| 0 52 | 0 23 | | 4 80 | 0 [illegible]0 | | 0 05 | 0 50 | 0 40 | 0 70 | 11 | (n) | 9 05 | (n) | 4 50 | 9 95 | (n) | Chaugram | | |
| 0 22 | 0·08 | | | 0 88 | 1 15 | 0 [illegible]8 | 0 25 | 0 15 | 0 68 | 10 | (n) | 7 10 | (n) | 2 27 | 7 10 | (n) | [illegible] | | |
| | | 1 40 | 1 10 | 0 60 | 0 48 | 0 13 | 0 64 | 0 85 | 0 40 | 14 | 10 9 | [illegible] | 11 45 | 2 50 | 12 81 | 11 45 | Nithpur | Dinajpur | |
| 0 29 | 1 85 | | | | 0 60 | 0 10 | 0 70 | 0 30 | 0 33 | 15 | 12 6 | [illegible] | 15 80 | 3 14 | 18 04 | 15 80 | Nawabganj | | |
| | | | | 2 82 | 0 32 | 0 16 | 0 15 | 0 28 | 0 18 | 16 | 13 [illegible] | [illegible]68 | 13 40 | 2 82 | 13 68 | 13 40 | Gangarampur | | |
| | | 0 50 | 2 55 | | | 0 72 | | 0·75 | 0 25 | 13 | 11 [illegible] | [illegible]08 | 11 55 | 4·70 | 20 08 | 11 55 | Churamon | | |
| 0 30 | | | 0 20 | 1 [illegible]0 | 0 25 | 0 08 | 0 18 | | 0 38 | 15 | [illegible] | 21 78 | 12 96 | 3 62 | 21 78 | 12 96 | Kaliganj | | |
| 1 40 | 0 70 | | | 0 80 | 0 20 | 0 32 | 0 83 | 0 23 | 1·65 | 16 | [illegible] | [illegible] | 14 51 | 4 20 | 19 38 | 14 51 | Dinajpur | | |
| | | | 0 22 | 0 17 | | | 0 27 | 0 17 | 0 12 | 14 | [illegible] | [illegible] | 11 95 | 4 65 | 20 77 | 11 95 | Balurghat | | |
| 1 39 | 0 88 | | 0 30 | 1·50 | | 0 52 | 0 47 | 1 22 | 0 10 | 17 | [illegible] | [illegible]72 | 16 69 | 4 20 | 14 72 | 16 53 | Thakurgaon | | |
| | | | | 2 90 | | | 1 30 | | 1 95 | 11 | [illegible] | [illegible]10 | 15 26 | 3 50 | 17 10 | 15 26 | Setabganj | | |
| | | | | | | | | | | | | | 16 82 | | | 16 82 | Raniganj | | |
| 0 18 | 0 84 | | 0 10 | 0 71 | 0 10 | 0 09 | 0 85 | 1 30 | 0 15 | 17 | [illegible] | 11 81 | 19 94 | 2 70 | 11 81 | 19 94 | Atwari | | |
| 0·28 | 1 21 | | 0 75 | 0·42 | | 0 55 | 1 35 | 0 50 | | 15 | [illegible] | 17 63 | 16 80 | 3 63 | 17 63 | 16 80 | Birganj | | |
| 0 57 | 1 23 | | | 0·10 | 2 00 | 0 25 | 0 80 | 0 90 | 0 75 | 17 | [illegible] | 23 70 | 13 40 | 3 57 | 23 70 | 13 40 | Parbatipur | | |
| 0 56 | 0 65 | | 0 50 | | 0 15 | 0 43 | 0 35 | 0 45 | | 18 | [illegible] | 21 77 | 24 94 | 4·05 | 21 77 | 24 94 | Jalpaiguri | Jalpaiguri | |
| 0 19 | | 1 0[illegible] | | 1·02 | 0 11 | 0 40 | 0 55 | 0 96 | 0 87 | 19 | [illegible] | 28 53 | 20·69 | 4 16 | 28 53 | 29 69 | Alipur Duars | | |
| 0 49 | | | 0 17 | | | 0 21 | 0 52 | 0 48 | | | [illegible] | 19 79 | 22 77 | 4 37 | 19 79 | 22 77 | Falakata | | |
| | | | | | | | | | | | [illegible]07 | | 18 70 | | | 18 70 | Debiganj | | |
| 0 79 | | | 0 27 | 2 05 | 1 26 | 2 34 | 0 48 | 0 07 | 0 09 | | 21 1 | 27 09 | [illegible] | 5 26 | 27 69 | 25 59 | Bhagatpur (*Vagrakata*) | | |
| 2 37 | | 0 43 | 0 04 | 0 52 | 2 24 | 0 20 | 0 43 | 0 10 | | | 22 4 | 32 40 | 38 15 | 5 13 | 32 40 | 38 15 | Buxa | | |
| 0·05 | ... | | 1·00 | 0 17 | | 0 78 | 0 08 | 0 22 | | | 19 5 | 25 51 | 26 05 | 5 79 | 25 51 | 26 05 | Kalchini | | |
| 0·65 | | | 1 06 | | 0 17 | | 0 28 | 2 99 | | | 18 3 | 37 09 | 30 79 | 6 18 | 37 09 | 30 79 | Kumargram | | |
| 2 75 | 0 50 | .. | | 0·50 | 1 35 | 3 50 | | 0· | | 20 | 19·3 | 38 78 | 25 00 | 4 75 | 38 78 | 25 00 | Siliguri | Darjeeling | |
| 2 42 | 0·26 | | 0·01 | 0 05 | 0 94 | 1 52 | 1 45 | | | 19 | 20 7 | 14 47 | 23 59 | 2 12 | 14 47 | 21 59 | Darjeeling | | |
| 0 91 | | | 0 10 | 0·02 | 0·96 | 0 98 | 0 74 | | | 18 | 16 3 | 14·01 | 16 81 | 3 29 | 14 01 | 16 84 | Kalimpong | | |
| 1 86 | 0 07 | | 0 38 | 0 10 | 1 50 | 1 46 | 1 09 | | | 18 | 19 3 | 24 15 | 24 65 | 4 11 | 21 15 | 24 05 | Mongpoo | | |
| 1 35 | 0 39 | | 0 29 | 0 25 | 3 01 | 1·78 | 2 15 | | | 20 | 22·0 | 23 68 | 31 18 | 3 01 | 23 08 | 31 18 | Kurseong | | |
| 0 88 | 0·65 | 0 18 | 0·24 | 0 29 | 0 89 | 2·60 | 0 6[illegible] | | 0 26 | 22 | 32 5 | 19 10 | 19·21 | 2 72 | 19 10 | 19 21 | Pedong | | |
| 2 12 | 0·26 | | 0·01 | 0·05 | 0 94 | 1 52 | 1 [illegible] | | 1·03 | 19 | (n) | 14 47 | (n) | 2 42 | 14·47 | (n) | Jalapahar | | |
| 0·01 | . | .. | 0·01 | | 0 01 | | 1 [illegible] | | 0 12 | 10 | 14 1 | 16 71 | 15 45 | 4 13 | 16 71 | 15 45 | Bhawaniganj (*Gaibandha*) | Rangpur | |
| .. | 2·68 | | 0 06 | 0·70 | 0·08 | 0·22 | 1 13 | 0 52 | 0·14 | 14 | 15·5 | 15 08 | 17 78 | 2 93 | 15 08 | 17 78 | Rangpur | | |
| 1·00 | 1 40 | | | 0 30 | 0·15 | 1 30 | 0 70 | 0·20 | | 18 | 13·5 | 29·29 | 15 67 | 6 15 | 29 29 | 15 67 | Pirganj | | |
| 2 23 | 0 71 | | 1 02 | 0 32 | 0·02 | 0 52 | 0 12 | 0·84 | 0 25 | 15 | 15 5 | 12 89 | 21 73 | 2 23 | 12 89 | 21 74 | Kurigaon | | |
| | | | | | | | | | | | 13 5 | | 13·87 | | | 13 87 | Gobindganj | | |
| 0 52 | 2 31 | | ·1 23 | 0 10 | 0 10 | 0 40 | 0 22 | 0 80 | 0 30 | 16 | 15 4 | 13 18 | 19 92 | 3 20 | 13 18 | 19 92 | Bagdogra (*Nilphamari*) | | |
| | | | | | | | | | | | 14·7 | | 18 41 | | | 18 41 | Ulipur | | |
| 1 40 | 0·30 | | ... | 0 60 | 0 08 | 0 19 | 1 20 | 0·27 | | 12 | 13 5 | 11 85 | 15 33 | 3·83 | 11 85 | 15 33 | Sunderganj | | |
| 0 31 | 0·39 | | . | 0·38 | | .. | 0 65 | 0 91 | 0·27 | 14 | 13 0 | 13 76 | 14·50 | 2 75 | 13 76 | 11 50 | Saidpur | | |
| | | | | 0·09 | . | 0 45 | 0 05 | | 0 79 | 7 | 13 1 | 5 91 | 11 70 | 2 05 | 5·01 | 11 70 | Sherpur | Bogra | |
| | | | | | | | | | | | 13 7 | | 13 49 | | | 13 19 | Nowkhilla | | |
| | 0 35 | | | 2 01 | 0·12 | 0 05 | 0 90 | 0 11 | 0 95 | 13 | 14 3 | 9 40 | 13 81 | 2 48 | 9 40 | 13 81 | Bogra | | |
| 1 10 | 0·33 | . | | 0 26 | 0 14 | | 0·20 | 0 31 | . | 13 | 12 4 | 9 96 | 11 93 | 2 83 | 9 96 | 11 93 | Panchbibi | | |
| 2 15 | | | 0 35 | 0 20 | 0 49 | 0·95 | 0·85 | 0 90 | | 16 | (n) | 16 85 | (n) | 4 75 | 16 85 | (n) | Khetlal | | |
| 0 46 | . | | | 0 77 | 0 03 | 0 27 | 0 46 | 0·47 | 0·04 | 10 | 13 4 | 4·88 | 11 03 | 0 77 | 4·88 | 11 03 | Shahzadpur | Pabna | |
| 0 02 | 1 07 | | . | 1 73 | 0 10 | 0·27 | 0 13 | 0·03 | 0·75 | 10 | 13 9 | 16 08 | 11·29 | 1 71 | 6 08 | 11 28 | Pabna | | |
| | | | | 3·65 | 0 30 | 0 33 | 0 51 | 0 38 | 0 58 | 10 | 13 9 | 10 17 | 12 09 | 3 65 | 10 17 | 11 09 | Sirajganj | | |
| | | | | | | | | | | | 14 0 | | 11 88 | | | 11 88 | Sara | | |

(n) Not ascertained.

| Division | Dist. | | | | | | | | | | | | | | | | | | | | | | | |
|---|---|---|---|---|---|---|---|---|---|---|---|---|---|---|---|---|---|---|---|---|---|---|---|---|
| Rajshahi—*concld* | Malda | Malda | | 3·45 | | | | | | | | | | | | | 0 16 | | 0 03 | 1 02 | 0 08 | 0 05 | | |
| | | Chanchal* | | | | | | | | | | | | | | | | | | | | | | |
| | | Gazol | 0 83 | 0 56 | | | | | | | | | 0·20 | | | | | | | 3 25 | 0 25 | | 0 15 | |
| | | Sibganj | | | | | | | | | | | | | | | | | | | | | | |
| | | Gomastapur | 0·06 | 0 77 | | | | | | | | | | | | | ... | | 0·56 | 0 48 | | | | |
| | | Nawabganj | 1 50 | | | | | 0 70 | | | 0·20 | | | | | | | 0 21 | 0·97 | | | | | |
| Dacca | Dacca | Munshiganj | | | | | 0 21 | | | | | | | | | | | | | 1 82 | 4 57 | | | |
| | | Dacca | | | 0·03 | 0 02 | | | | | | | 0·09 | 0 01 | | | 0 48 | | 0 73 | 0 96 | 2 05 | 0 02 | 0 02 | |
| | | Nawabganj | | | | | | | | | | | | | | | | | 0·46 | 2 01 | 0 71 | | | |
| | | Narayanganj | | | | | | | | | 0·02 | | 0·05 | 0·06 | | | 0·17 | | 0 29 | 0 54 | 1 82 | | | |
| | | Narsingdi | | | | | 0 05 | | 1 33 | 0 19 | 1 45 | | 0 90 | 0·02 | | | 1 01 | | 0·09 | 2 88 | 1 00 | | 0 13 | |
| | | Manikganj | | | | | | | | | | | | | | | 0 25 | | 0 85 | 1 91 | 1 15 | | | |
| | | Joydebpur | | | | | | 0 12 | 0 09 | 0 19 | | 0 76 | 0 06 | | 1 14 | | 0 01 | 0 74 | 1 92 | 5 60 | | 1 00 | 0 24 | |
| | | Kapasia | | | | 0 21 | | | 0 75 | 0 73 | 0 30 | 0 09 | | | | | 1·18 | | 0 40 | 1 90 | 5 50 | 0 05 | 0 50 | |
| | Mymensingh | Kishorganj | 0 15 | | | | | | | 4 11 | | | 2 30 | | 1 13 | | 0 85 | 0 15 | 0 65 | 5 34 | 4 30 | 0 02 | | |
| | | Atia (*Tangail*) | | | | 0 09 | | | | 0 30 | 0 28 | | | | | | 0 18 | 0 10 | 0 64 | 0 96 | 0 11 | | 0 16 | |
| | | Sarisabari | 22 | | | | | | | 0 83 | | | 0 64 | | | | | | 0 11 | 2 16 | 7 83 | | | |
| | | Mymensingh | | 20 | | | | | | | 0 06 | | 2 35 | 0 17 | | | 0 15 | 0 87 | 0 01 | 2 91 | 1 77 | 0·38 | | |
| | | Jamalpur | | 19 | 0 06 | | | | | | 0 23 | 0 12 | 1 11 | 0 22 | 0 02 | | | 0·21 | 0 30 | 2 35 | 7 32 | 0 08 | 0 13 | |
| | | Netrokona | | 30 | | | | | | 0 45 | 0 09 | | 3 10 | 1 06 | 0 20 | | 0 02 | 0 90 | 0·10 | 1 46 | 2 60 | 1 01 | 0 05 | |
| | | Phulpur | | 15 | | | | | | | | 0 22 | | | | | 0 20 | | 0 05 | 2 50 | 2 58 | | | |
| | | Durgapur | | | | 0 32 | | | | | 0 82 | 2 60 | 0 25 | 3 42 | | | 0 54 | 1 00 | 0 9[illegible] | 0 50 | | | | |
| | | Sherpur | | | | | | | | | | | 2 19 | 0 30 | | | | 0 69 | 0 74 | 2 68 | 2 22 | 1·00 | 0 30 | |
| | | Dewanganj | | | | | | | | | | 1 92 | 6 23 | 0 23 | 0 07 | | | 1 05 | 3 50 | 6 43 | 6 50 | 0 23 | 0 84 | |
| | | Nalitabari | | | | | | | | | | 3 05 | | | 0 20 | | | 0 60 | 3 10 | 2 60 | 2 00 | | 2 23 | |
| | Faridpur | Madaripur | | | | | | | | 0 91 | 0 12 | | | 0 09 | | | | | | 1 10 | 0·28 | 0 21 | 0 05 | |
| | | Faridpur | | 0 [illegible] | | | | | | | | | | | | | | | 0 44 | 2 21 | 0 08 | | 0 85 | |
| | | Madhukhali (*Goalundo*) | | | 05 | | | | | 0 65 | | | | | | | | | 0 43 | 0 12 | 0 08 | | | |
| | | Harishpur (*Gopalganj*) | | 0 34 | 0 16 | | | | | 0 17 | | | | | | | | | | | | | | |
| | | Takerhat | | | | 77 | | | 0 21 | | 0 66 | 0 01 | | | | | | 0 01 | 1 74 | 0 18 | | 0 41 | 1 17 | |
| | | Bhanga | | | | | | | | | | | 0 04 | | | | | | | 2 25 | 0 40 | | 0 25 | |
| | | Pangsa | | | | | | | | 0 45 | | | | | | | | | 0 75 | 0 50 | 0 25 | | | |
| | | Bellakandi | | | | | | | | | | | | | | | | | 0 22 | 0 09 | 0 01 | | | |
| | | Bhusna | | | | | | | | | | | | | | | | | | 3 18 | 0 16 | | 0 97 | |
| | | Palong | | | | | | | | | | | | | | | | | | 0 50 | 1 00 | | | |
| | Bakarganj | Patuakhali | | | | | 0 4 | 0 49 | | 1 80 | | 0 11 | 0 02 | | | | | | | 0·08 | 1 95 | 0 35 | 0 08 | |
| | | Barguna | | | | | | | | | | | | | | | | | | 1 40 | 0 30 | | | |
| | | Pirozpur | | | | | | | | 0 55 | 0 77 | | | | | | | | | 0 72 | | | 0 86 | |
| | | Barisal | | | | | 0 20 | | | 2 79 | | 0 70 | 0·05 | | | | | | | 1 95 | 0 35 | | 1 36 | |
| | | Gaurnadi* | | | | | | | | | | | | | | | | | | | | | | |
| | | Bhola | | | | 0 10 | | 0 [illegible] | 0 06 | 0 31 | | 0 00 | 0 02 | | ... | | | | | 2 11 | 1 44 | 0 0[illegible] | | |
| | | Daulatkhan | | | | | | | 1 25 | | | | | | | | 0 0[illegible] | 0 12 | 0 [illegible] | 1·0[illegible] | 0 10 | 2 28 | 0 42 | |
| | | Bauphal | | | | | | 2 93 | | | 0 65 | | | | | | | | 0 27 | 2 12 | | | | |
| Chittagong | Chittagong | Cox's Bazar | | | | | 0 03 | 0 19 | 1 0[illegible] | 0 37 | 4 13 | 0 15 | | | 0 08 | | | 0 42 | 0 0[illegible] | 0 01 | 0 10 | 0 7[illegible] | | |
| | | Chittagong | | | | | 0 24 | 0·04 | 2·33 | 1 44 | 2 95 | 1 13 | | | | | | | 1 77 | 0 32 | 1 52 | 3 02 | 0 43 | |
| | | Kutubdia | | | | | | 0 60 | 0·35 | | 1 40 | 0 80 | | 0 01 | | | | | | | 0 50 | 1 01 | | |
| | | Satkania | | | | 0·[illegible] | 0 15 | 2 75 | 1 [illegible] | | [illegible] | | | | | | | | | 0 70 | 1 30 | | 1 80 | |
| | | Kodala | | | 0 71 | 0 60 | 0 24 | 2 40 | 2 06 | | | | | | | | | | | 2 17 | 1 54 | 0 72 | | |
| | | Mirsarai | | | 0 22 | 3 60 | 1·69 | 1 73 | 0 [illegible] | | 0 [illegible] | | 0 10 | | 0 03 | 0 26 | 1 00 | 0 7[illegible] | | 0·20 | | | 2 02 | |
| | Tippera | Comilla | | | | | 5 07 | | 0 07 | | | | | 0 10 | | 0 0[illegible] | | | | 0 88 | 5 80 | | 0 50 | |
| | | Chandpur | | | | | | | | | | | | | | | | | 0 47 | 4 69 | | | | |
| | | Brahmanbaria | | 0 16 | | | 0 62 | | 0 37 | 0 4[illegible] | | | 0 80 | 0 23 | | 0 65 | | | 0 55 | 2 04 | 1 35 | 0·22 | 0 02 | |
| | | Ramchandrapur | | | | 0 15 | | 0 45 | | 2·00 | | | | | | | | 0 11 | 1 07 | 5 10 | | 0·46 | 0·24 | |
| | | Nasinagar | | | | | | 1 10 | 2 74 | | | | 1 65 | 1 05 | | | | 1 64 | 2 16 | | | 0 65 | | |
| | | Daudkandi | | | | | 0 80 | | | 0 07 | | 0 02 | 0 02 | | | 0 0[illegible] | | 0 13 | 0 08 | 3 7[illegible] | | 0 26 | | |
| | | Kasba | | | | 0 50 | | 0 80 | 0·95 | | | | | 1 20 | | | | 0·83 | 0 61 | 4 32 | | | 0 95 | |
| | | Laksam | | | | | 3 20 | | 0 65 | 0 40 | | | | | | | | | | 1 40 | | 1 90 | | |
| Chittagong | Noakhali | Noakhali | | | | | 0 05 | 0·12 | 0 55 | 0 02 | | 1 54 | | 0·16 | | | | | | 0 12 | 5 24 | 1 50 | | |
| | | Fenni | | 0 21 | | 1 51 | 0 12 | 0 56 | 1 05 | 2 22 | | | | | 0·02 | 0 02 | | | 0·46 | 1 92 | 2 61 | | 0 98 | |
| | | Harishpur | | | | | | | | | 4 [illegible] | | 1 78 | | 0 07 | | | | 0 31 | | 1 52 | | 0 09 | |
| | | Ramganj | | | | | | | 0 10 | | 0 1[illegible] | | 1·86 | | | | | | | 0 32 | 3 78 | 0 02 | | |
| | | Chhagalnaya | | | | 1 19 | 2 02 | 0 70 | | 1 90 | 0 30 | | | 1 05 | | 0 05 | | | | 0 72 | 3 12 | 2 16 | | |
| | | Hatiya | | | | | | | | 1 15 | 2 95 | | | | | | | | | 0 91 | 2 85 | 2 20 | | |
| | | Lakhmipur | | | | | | | | | | 0 [illegible] | | 1 [illegible] | | | | | | 1·05 | 1 60 | | 1 36 | |
| | | | | | | | | | | | | | | 0 02 | | | | | | | | | | |
| | | | | | | | | | | | | | | 0 02 | | | | | | | | | | |
| | Chittagong Hill Tracts. | Rangamati | | | | | 2·88 | 1 80 | 0 75 | 0 71 | 2 08 | 2 90 | | 0 06 | | | | | 0·02 | 0 44 | 0 91 | 2 35 | 1 11 | |
| | | Bandarban | | | | | 1 05 | 3 30 | 1·25 | 0·72 | 2 90 | 0·06 | | 3 53 | | | | | | | 3 09 | 0·07 | 0 06 | |
| | | Barkal | | | | | 2 50 | 2 40 | 1·00 | 0 80 | 1·00 | 0 85 | | 2 19 | | 0 02 | | | 0 46 | 0 80 | 0 2 12 | 0 01 | | |
| | | Mahalchari | | | | 2 11 | 0·91 | | 0 50 | 1 92 | 0·90 | | 1 30 | 0 02 | | | | | | 1 25 | 1·05 | 1 50 | | |
| | | Lama | | | | 0 37 | | 0 76 | 1 20 | 2·05 | 0·86 | 2 93 | | 0·58 | | | | 0·21 | | | 0 18 | 1 94 | | |
| | | Ramgarh | | | 0 60 | 0 42 | | 0 85 | 1 28 | 1 18 | | | | | | | | | 1 70 | 0 66 | 2 10 | 3 10 | 0·60 | |
| | | Dighinala | | | | 0 30 | 0 35 | 0 05 | 0 25 | 0·10 | 0 95 | | 1 25 | 0·10 | 0 40 | | 0 15 | | 0 88 | 2 75 | 2 50 | 0·09 | 0 10 | |
| | | Manikcheri | | | | 1·27 | 0·49 | 0·50 | 1 06 | 2 60 | 2 21 | | 0 49 | | | | 0·12 | | 0 75 | 2 20 | 3 13 | ... | | |
| | Tripura State. | Agartala | | 0 46 | | 1·08 | | 0·14 | 0·07 | 1 70 | | 0·05 | 0 41 | 0 04 | 0·27 | | 0·29 | | 0 46 | 6·40 | 0·09 | | 1 38 | |
| | Cooch Behar | Dinhata | 1 17 | 0 05 | | | | | 0·02 | 0 38 | | 0·60 | 0 85 | 0·50 | 0 05 | 0 02 | 0 85 | | 1 50 | 1 20 | 0 50 | 0 05 | 0 43 | |
| | | Cooch Behar | 1 65 | 0 80 | | | | | | | 0·27 | 0 41 | 1 11 | 1 40 | 0 76 | 0 51 | 3 10 | | 2 84 | 2 85 | 0 12 | 0 08 | 0 22 | |
| | | Mekliganj | 0·28 | | | | | | 0 20 | 0·05 | 0·07 | 0 22 | 0 20 | 0 80 | 0·05 | 0·02 | 0 25 | | 2 14 | 2·78 | 0 21 | 0 22 | 0·10 | |
| | | Mathabhanga | 2·49 | | | | | | | | 2·41 | 0 17 | 1·09 | 0 96 | 0 96 | 0·07 | 2 00 | | 2·34 | 4 82 | 0 10 | 0 13 | 0 88 | |
| | | Fulbari (*Tufanganj*). | 1·85 | 0 61 | | | | | 0·02 | 0 15 | 0 17 | 0·14 | | 3 80 | 1·06 | 2 80 | 6 12 | | 4 [illegible] | 3 60 | 0 05 | | 0·19 | |

* Returns not received.

DACCA, *the 18th July 1923.*

| | | | | | | | | | | | | | | | | | | | | | | |
|---|---|---|---|---|---|---|---|---|---|---|---|---|---|---|---|---|---|---|---|---|---|---|
| 21 | 22 | | | | | | | | | | | | | | | | | | | | | |
| 0 01 | | 0 65 | 1 56 | 3 11 | 0 71 | 0 24 | 0·27 | 0·51 | 0 20 | 12 | | | | | | | | | | | | |
| | | | | 2 51 | 1 45 | 0 60 | 0 16 | 0 45 | 0 44 | 14 | 11 4 | | | | | | | | | | | |
| | | | 0 31 | 1 41 | 2 80 | 0 43 | 1 00 | 1·16 | 0 48 | 8 | 11 7 | | | | | | | | | | | |
| 0 26 | | 1 74 | | 0·90 | 1 20 | | 0 25 | | 0 78 | 11 | 10 8 | | | | | | | | | | | |
| | | 0 10 | 0 28 | 2·60 | 1 10 | 0 28 | 0 40 | 0·14 | | 12 | 12 3 | | | | | | | | | | | |
| 2 39 | | | 0 82 | | 0 46 | 0 33 | 1 36 | 1 58 | 1 22 | 10 | 15 5 | 11 86 | 14 36 | 4 57 | | | | | | | | |
| 0 75 | | 0 13 | | 0 74 | 0 46 | 0 38 | 0 35 | 0 22 | 0 41 | 12 | 15 2 | 7 85 | 13 83 | 2 05 | | | | | | | | |
| | | | | 0 72 | 0 54 | | 0 15 | 0 94 | 0 57 | 8 | 13 0 | 6 10 | 16 21 | 2 01 | | | | | | | | |
| 0 61 | | 0·01 | 0 06 | 0 24 | 0 57 | 0 13 | 0·42 | 0 85 | 0 44 | 11 | 10·3 | 6 48 | 13 91 | 1·82 | | | | | | | | |
| 0 09 | 0 33 | 0 17 | 0 15 | 0 46 | 0 58 | 0 21 | 0 03 | 0 73 | Nil | 1 | 14 5 | 15 00 | 16 21 | 5 00 | | | | | | | | |
| | | | | 0 57 | 0 45 | 0 20 | 0 82 | 0 62 | 0 68 | 10 | 13 4 | 7 47 | 11 53 | 1 91 | | | | | | | | |
| 0 02 | | 0 06 | 1·08 | 2 33 | 0 11 | 0 61 | 0 31 | 0 04 | 0 13 | 15 | 15 5 | 14 06 | 14 25 | | | | | | | | | |
| 1 37 | | 0 07 | | 0 06 | 1 50 | 0 06 | 0 30 | 0 35 | 0 15 | 14 | 15 8 | 18 71 | 15 08 | 5 50 | | | | | | | | |
| | | 0 31 | 0 19 | 0 42 | 0 21 | 0·22 | 0·09 | 0 71 | 0 02 | 15 | 16 5 | 21 76 | 18 32 | 5 33 | 21 36 | | | | | | | |
| 0·07 | | | 0 10 | 0·17 | 0 15 | 0 36 | 0 39 | 0 23 | 0 13 | 17 | 13·1 | 4 | 21 | 0 96 | 4 72 | | | | | | | |
| | | | | 2 82 | | 0 36 | 0 96 | 0 54 | 0 31 | 11 | 14 0 | | 2 | 7 83 | 18 81 | | | | | | | |
| 0 23 | 0 34 | | 0 08 | 0·06 | 0 06 | 1 35 | 0 01 | 0 23 | 0 21 | 13 | 18 4 | | 5 | 3 77 | 14 82 | | | | | | | |
| 0 00 | 0 13 | | | 0 43 | 0 06 | 0 16 | 0 25 | 0 14 | 0 31 | 18 | 16 0 | 1 | 7 | 7 32 | 17·06 | | | | | | | |
| 0 42 | 0 52 | 0 12 | 0 15 | 0·16 | 0 04 | 0 50 | 0 29 | 0 58 | 0 22 | 19 | 19 3 | 16 | 2 | 3 10 | 15 53 | | | | | | | |
| | | | | 3 20 | 0 27 | 0 06 | 0 14 | 0 45 | 0 12 | 12 | 14 3 | 11 21 | 12 70 | 3 20 | 11 24 | | | | | | | |
| | 0·75 | | 0 20 | | 1 56 | 0 62 | 0 22 | | | 11 | 18 1 | 13 21 | 27 26 | 3 22 | 13 24 | | | | | | | |
| 0·70 | 0 39 | | | 0 67 | | 0 32 | 0 08 | 0 80 | 0 29 | 16 | 15 6 | 16 79 | 15 97 | 3 00 | 16 7 | | | | | | | |
| 4 24 | 0 21 | | | 0 46 | 0 63 | | 2 07 | 1 35 | 0 35 | 18 | 13 2 | 39 70 | 15 92 | 6 60 | 39 70 | | | | | | | |
| | | 1 26 | 0 40 | 0 30 | 0 50 | 0 45 | 1 75 | 0 40 | 0 30 | 17 | 16 3 | 21 13 | 21 63 | 3 10 | 21 11 | | | | | | | |
| | 1 21 | | 0 04 | | 0 87 | 1 16 | 1 31 | 0 5 | 0·53 | 12 | 15 2 | 8 51 | 12 76 | 1 | 7 40 | | | | | | | |
| | 0 61 | | 0 32 | 0 14 | 0 44 | 0 20 | 0 23 | 1 16 | 0 15 | 12 | 14 7 | 7 40 | 13 12 | | | | | | | | | |
| | | 0 12 | | 0 01 | 0·24 | 0 77 | 0 15 | 0 30 | 0 01 | 8 | 15 6 | 3 13 | 11 38 | | | | | | | | | |
| | 0 64 | | 0 18 | 0 30 | 0 06 | 0 33 | 0 3 | | 0 68 | 7 | 14 1 | 3 23 | 12 1 | | | | | | | | | |
| 2 51 | 0 01 | 0 27 | 0·71 | 0 07 | 0 82 | 1 29 | 0 38 | 0 54 | 0 18 | 15 | 17 0 | 11 94 | 8 | 2 | 11·91 | 20 09 | | | | | | |
| | 0 49 | | | 0 34 | 0 36 | 0 31 | 0 84 | 1 00 | 0 12 | 10 | 17 0 | 6 | 36 | 4 | 6 40 | 13 16 | | | | | | |
| | 0 71 | | | 1 05 | 1 20 | 4 65 | 0 15 | 0 30 | | 10 | 16 | 10 | 16 07 | 1 | 10 39 | 11 86 | | | | | | |
| | 0 42 | 0 02 | 0 23 | 0 36 | | 1·53 | | 0 33 | | | | 51 | 13 74 | | 4 11 | 16 17 | | | | | | |
| | 2·65 | | 0 06 | 0 09 | | | 0 40 | | | | | 03 | 19 71 | | 10 81 | 13 71 | | | | | | |
| | 0 60 | | | | | | | | 1 80 | | | | | | 8 01 | 19 73 | | | | | | |
| | 0 30 | | 0 39 | 0 21 | 2 25 | 1 05 | 0 96 | 1 42 | 0 37 | 14 | 17 | 15 41 | 21 | | 15·41 | 21 78 | Patuakhali | Bakarganj |
| | | 1 30 | 1 10 | 2 50 | 2 90 | 0 50 | 1 20 | 0 75 | 0 40 | 10 | 17 6 | 12 55 | 20 | 2 90 | 12 55 | 20 80 | Bargunna | |
| 0 10 | 0 06 | 0 01 | 1 46 | 0 36 | 0 76 | 1 02 | 3 36 | 1 36 | 0 56 | 13 | 16 2 | 12 66 | 36 | 3 35 | 12 66 | 16 16 | Pirozpur | |
| 0 21 | 0 05 | 0 02 | 0 05 | 0 37 | 0 56 | 1 80 | 0 68 | 2 02 | 0 20 | 13 | 16 8 | 13 02 | 6 59 | 2 79 | 13 02 | 16 51 | Barisal | |
| | | | | | | | | | | | 14 8 | | 13 9 | | | 13 92 | Gournadi | |
| | 0 60 | 0 12 | 0 05 | 1 48 | 1 36 | 1 73 | 2 20 | 0 19 | 0 13 | 14 | 17 7 | 13 3 | 15 04 | 2 20 | 13 36 | 18 31 | Jhalakati | |
| 0 58 | 0 60 | 0 30 | | 1 06 | 2 25 | 1 70 | 1 13 | 0 75 | 1 13 | 16 | 17 6 | 13 | 21 29 | 2 28 | 14 66 | 21 23 | Daulatkhan | |
| | 0 12 | 1 80 | 0 24 | 2·24 | 2 73 | 1 12 | 1 53 | 0 1 | 0 05 | 12 | 16 5 | | 17 11 | 2 31 | 16 72 | 17 14 | Paurbal | |
| | 0 00 | 1·08 | 1 30 | 1 88 | 3 10 | 1 80 | 5 10 | 0 70 | 2 82 | 16 | 18 8 | 25 59 | 30 39 | 5 10 | 25 59 | 30 39 | Cox's bazar | Chittagong |
| | 0 01 | 3 33 | 0 52 | 0 30 | 2 38 | 4 53 | 0 59 | 1 90 | 0 45 | 18 | 16 8 | 29 | 21 87 | 4 51 | 29 53 | 21 87 | Chittagong | |
| | | 2 40 | 0 24 | 1 02 | 2 91 | 2 69 | 3 52 | 1 02 | 1 32 | 15 | | 25 94 | 22 90 | 6 40 | 25 93 | 22 90 | Anundolla | |
| | 1 32 | 0 35 | 0 15 | 0 75 | 0 35 | 1 80 | 0·51 | 0 65 | 0 15 | 1 | | 28 13 | 19 58 | 11 60 | 28 13 | 19 58 | Satkania | |
| 0 05 | 0 08 | | | 0 30 | 0 90 | 1·65 | 0 80 | 0 55 | 0 08 | | | 19 16 | 17 80 | 2 40 | 19 16 | 17 80 | Kodala | |
| 0 16 | 1·26 | 0 17 | 3 00 | 2 40 | 1 40 | 0 39 | 0 85 | 0 15 | 0 53 | | | 23 62 | 22 59 | 3 02 | 23 62 | 22 59 | Mirsarai | |
| 0 60 | 0 07 | 2 37 | 0 05 | 1 25 | 1 00 | 0 14 | 0 09 | 1 16 | 0 20 | 1 | | 19 80 | 18 05 | 2 37 | 19 80 | 18 05 | Comilla | Tippera |
| | | | 1 70 | 0 67 | 0·40 | 0 75 | 0 47 | | 1 77 | | | 9 71 | 15 51 | 3 60 | 9 73 | 15 54 | Chandpur | |
| 1·42 | 0·24 | 0 65 | 0·05 | 0 95 | 0·05 | 0 1 | 0 22 | 0 2 | | | 8 | 20·61 | 16 80 | 6 60 | 20 61 | 15 80 | Brahmanbaria | |
| | 0 20 | 0 03 | 1 50 | 0 51 | 0 12 | 0 20 | 1 46 | | | | 13 2 | 13 32 | 16 29 | 5 10 | 13 92 | 16 29 | Ramchandrapur | |
| | 2 58 | | 0 18 | | 0 26 | | | | | | 14 9 | 14 01 | 16 20 | 2 71 | 14 01 | 16 26 | Nasirnagar | |
| 0 37 | | 2 | 0·62 | 0 60 | 0·85 | 0 43 | 0·93 | 0 06 | 0 93 | | 14 1 | 10 27 | 11 18 | 1 75 | 10 27 | 14 18 | Daudkandi | |
| 0 80 | | 0 70 | 1·93 | 0 29 | 0 35 | 0 30 | 0 77 | | | | 16·3 | 15 | 15 60 | 1 93 | 15 30 | 15 60 | Kasba | |
| 0 80 | | 0 15 | | 0 99 | 0 85 | 0 65 | | 2 40 | | | 14 1 | 13 84 | 16 43 | 3 20 | 13 81 | 16 43 | Laksam | |
| 0 15 | 0·20 | 0 35 | 0 02 | 1 10 | 0 50 | 1 24 | 1 95 | 0 90 | | | 18 1 | 14 18 | 23 47 | 1 95 | 14 18 | 23 47 | Noakhali | Noakhali |
| 0·33 | | 0 55 | 0·10 | 2 75 | 1 32 | 1 01 | 0 71 | 0 8 | | | 17 5 | 22 62 | 23 08 | 2 9 | 22 62 | 23 08 | Feni | |
| | 1 75 | | 0 14 | 2 46 | 1 85 | 2·96 | 1 17 | | | 2 | 16 8 | 17 50 | 22 20 | 1 05 | 17 50 | 22 20 | Hatiahpur | |
| 0 54 | 0 60 | 0 20 | | 1 30 | 1 60 | 0 50 | 0 82 | | | 3 | 16 2 | 12 54 | 16 49 | 3 78 | 12 54 | 16 49 | Ramganj | |
| 2 08 | 0 24 | 0 95 | 0 28 | 2 07 | 0 84 | 1 42 | 0·22 | | | 19 | 17 3 | 22 70 | 20 56 | 2 08 | 22 70 | 20 5 | Chhagalnaiya | |
| | 0 25 | 0 30 | 2 10 | 2 20 | 2 15 | 1·95 | 1 10 | | | 13 | 17 8 | 20 25 | 22 13 | 2 95 | 20 25 | 22 13 | Hatia | |
| 0 18 | | | | 0 25 | 1 00 | | | | | 8 | 18 4 | 10 68 | 20 31 | 4 68 | 10 68 | 20 31 | Lakhmipur | |
| 0 41 | 0 15 | 1 60 | 0 25 | 0 10 | 0 27 | 0 56 | | | 1·10 | 20 | 19 7 | 22 60 | 17 84 | 2 98 | 22 60 | 17 84 | Rangamati | Chittagong Hill Tracts |
| | 0 42 | 0 56 | 0 10 | | 1·05 | 0 28 | | | 1·05 | 14 | 19 0 | 16·91 | 20 06 | 3 40 | 16 91 | 20 06 | Bandarban | |
| | 1 50 | 0·00 | 0 35 | | 0 50 | 0 55 | | 0 61 | 0 02 | 16 | 10 1 | 17 49 | 19 06 | 2 50 | 17 49 | 19 06 | Barkal | |
| | | 1 50 | 0 45 | 0 21 | 0 90 | 0 78 | | 0 90 | | 15 | (n) | 15 90 | (n) | 2 11 | 15 90 | (n) | Mahalcheri | |
| | 0·35 | 0 38 | 0 59 | 2 75 | 2 34 | 2 85 | 35 | 0 30 | 1 40 | 19 | (n) | 31 89 | (n) | 8 86 | 31 89 | (n) | Lama | |
| | | | | | 2 80 | 0 76 | | | | 12 | (n) | 16 69 | (n) | 3 10 | 16 69 | (n) | Ramgarh | |
| 0·21 | 0 42 | 1·00 | | 0·60 | 0 55 | 0 05 | 0 20 | 0 21 | | 21 | (n) | 13 79 | (n) | 2 75 | 11 79 | (n) | Dighinala | |
| 1 63 | .. | 2·03 | 0 15 | 0 47 | 1 11 | 2 24 | 0 11 | 0 78 | 0 48 | 20 | (n) | 23·63 | (n) | 3 13 | 23 63 | (n) | Manikcheri | |
| 0 86 | 3 14 | 0 15 | 0·21 | 0 37 | 0 09 | 0 14 | 0 08 | 0 12 | 0 07 | 17 | 15 3 | 18 77 | 15 47 | 8 40 | 18 77 | 15 47 | Agartala | Tripura State |
| 2·22 | 0 40 | | 0 40 | 0 33 | 0 22 | 0 17 | 0 30 | 0·80 | 0 30 | 19 | 17 3 | 13·45 | 26 02 | 2·22 | 13 15 | 26·02 | Dinhata | Cooch Behar |
| 0·06 | 0·87 | | 0 37 | 0·02 | 0·25 | 0 67 | 0·86 | 0·25 | 0·04 | 19 | 18·8 | 20 31 | 31 98 | 3·10 | 20 31 | 31 98 | Cooch Behar | |
| 0 70 | 0 32 | | 0 06 | | 0 12 | 0 02 | 1 08 | 0 26 | 0 06 | 16 | 17·5 | 11 32 | 24·54 | 3 08 | 11·32 | 24 54 | Mekliganj | |
| 0·31 | 0 36 | | 0 25 | | 0 36 | 0 05 | 0·29 | 0 51 | ... | 18 | 17 7 | 20·87 | 27·75 | 4 82 | 20 87 | 27 75 | Mathabhanga | |
| 0 08 | 0 76 | | 0·22 | 0·06 | 1 14 | 0·45 | 0·08 | 1·22 | 0 23 | 19 | 17 5 | 28 34 | 27·72 | 6 12 | 28 34 | 27 72 | Fulbari (Tufanganj) | |

(n) Not ascertained.

J. C. ROY, for *Director of Agriculture, Bengal.*

| | | | | | |
|---|---|---|---|---|---|
| 1923 | | | | 51·50 | P. W. D datum 6·25 feet above Kidderpore old dock sill<br>B M on Rajshahi College step 64·93.<br>Value of zero = 0·00 P W D. |
| 8th July ... | 7 A.M. | | 69 | 52·30 | |
| 9th " ... | 7 " | | 90 | 53 40 | |
| 0th " ... | 7 " | | 48 20 | 53 90 | |
| 1th " ... | 7 " | 48 55 | 48·55 | 54·00 | |
| 2th " ... | 7 " | 49·00 | 49 00 | 54·50 | |
| 3th " ... | 7 " | 49 10 | 49 10 | 55·00 | |
| 4th " ... | 7 " | | | | |

| | | Old value | According to P W D datum |
|---|---|---|---|
| The prev | Highest water-lev | on 15th September 1922 | 61 75 |
| Ditt | Lowest " | on 4th May 1923 | 35 80 |
| Record | Highest " | 9 25 on 26th August 1879 | 64 44 |
| Do | Ditto " | 69 08 on 9th September 1885 | 64 27 |
| Do | Ditto " ... | 68 50 on 25th August 1906 | 63 47 |
| Do | Ditto " | 68 21 on 26th August 1890 | 63 40 |
| Do | Lowest " | 37 68 on 25th April 1884 | 32 82 |
| Do | Ditto " | 38 13 on 14th and 15th April 1888 | 33 32 |
| Do | Ditto " | 39 02 on 21st and 22nd April 1897 | 34 21 |
| | " | 39 28 on 6th and 7th May 1908 | 34 47 |
| | Ditto " | on 9th May 1922 | 34 70 |

N B The gauge readings commenced from the 1st August 1887.

BHU[illegible]I NATH SEN GUPTA, *Subdivisional Officer,*

BO[illegible]LIA, *the 14th July 1923.* *I. D., Jangipur.*

***Statement of weekly gauge-readings on the rivers Ganges and Brahmaputra at Goalundo for the week ending 14th July 1923.***

| Month and date. | Hour. | Height of surface above or below zero of gauge. | Height of surface above mean sea-level | Height of surface above mean sea on same [illegible]t year | Remarks. |
|---|---|---|---|---|---|
| 1923 | | | | | |
| 8th July ... | 7 A.M | 21 6 | 21 6 | 4 | Zero is placed at mean sea-level. |
| 9th " ... | 7 " | 21·7 | 21 7 | 5 | The bench-mark for the gauge is on a pucca pillar between the passenger ghat and Chandpore ghat. |
| 10th " ... | 7 " | 21 7 | 21 7 | | |
| 11th " ... | 7 " | 21·7 | 21 7 | | |
| 12th " ... | 7 " | 21·9 | 21 9 | | |
| 13th " ... | 7 " | 22·0 | 22 0 | | Its reduced level is 26·84. |
| 14th " ... | 7 " | 22·3 | 22 3 | 2 | |

| | | | |
|---|---|---|---|
| The previous year ... ... | Highest water-level | ... | 24 6 on [illegible] 1922 |
| Ditto ... ... | Lowest " | .. | 4·3 on 1[illegible] |
| Record (H F. in Brahmaputra and Ganges) ... ... | Highest " | ... | 25·75 on 28th Au[illegible] 06 |
| Record (average flood in Brahmaputra and Ganges) ... | Ditto " | ... | 25 74 on 20th and 21st [illegible]gust 1893 |
| Record (H F. in Brahmaputra and Ganges) ... ... | Ditto " | ... | 25 66 on 11th to 17th and 31st August 1889 and on 1st to 3rd September 1889. |
| Record (H F in Brahmaputra only) . ... | Ditto " | ... | 25 66 on 31st July 1900 |
| Record .. ... | Lowest " | ... | 1·0 on 8th February 1914 |
| Do .. ... | Ditto " | ... | 2·42 on 18th March 1906. |
| Do . .. | Ditto " | ... | 2·91 on 21st to 24th February 1884 and 8th to 9th March 1884. |
| Do .. ... | Ditto " | ... | 3 16 on 9th to 11th March 1885. |
| Do ... | Ditto " | .. | 3·16 on 16th, 17th and 29th to 31st March 1901. |

N B —The gauge-readings commenced from 3rd October 1909.

ILLEGIBLE, for *Subdivisional Officer,*

RAJBARI, *the 14th July 1923.* *P. W. D., Faridpur.*